TPS22970 3.6-V, 4-A, 4.7-mΩ On-Resistance Load Switch

1 Features

- Input Voltage Range (V_{IN}): 0.65 V to 3.6 V
- On-Resistance
  - R_{ON} = 4.7 mΩ (Typical) at V_{IN} ≥ 1.8 V
  - R_{ON} = 5.1 mΩ (Typical) at V_{IN} = 1.05 V
  - R_{ON} = 6.4 mΩ (Typical) at V_{IN} = 0.65 V
- Maximum Continuous Switch Current (I_{MAX}): 4 A
- ON State (I_Q): 30 µA (Typical) at V_{IN} > 1.2 V
- OFF State (I_{SD}): 1 µA (Typical) at V_{IN} > 1.8 V
- Controlled Slew Rate to Avoid Inrush Current
  - 3.6 V Turn-ON time (t_{ON}): 1530 µs
  - 0.65 V Turn-ON time (t_{ON}): 815 µs
- Low Threshold Enable (ON) Supports Use of Logic as Low as 0.9 V (V_{IH}) of Logic
- Thermal Shutdown (T_{SD})
- Quick Output Discharge (QOD): 150-Ω (Typical)

2 Applications

- Notebook, Tablet
- Industrial PC
- Smartphones
- Telecom
- Storage

3 Description

The TPS22970 is a small, space-saving load switch with controlled Turn-ON to reduce inrush current. The device contains an N-channel MOSFET that can operate over an input voltage range of 0.65 V to 3.6 V and pulsed switch currents up to 4 A. An integrated charge pump biases the NMOS switch in order to achieve a minimum switch ON resistance (R_{ON}). The switch is controlled by an on and off input (ON), which is capable of interfacing directly with low-voltage control signals.

The TPS22970 is capable of thermal shutdown when the junction temperature is above the threshold, turning the switch off. The switch turns on again when the junction temperature stabilizes to a safe range.

The TPS22970 has a 150-Ω on-chip resistor for quick discharge of the output when switch is disabled to avoid any unknown state caused by floating supply to the downstream load.

The TPS22970 has an internally controlled rise time in order to reduce inrush current.

The TPS22970 is available in an ultra-small, space saving 8-pin WCSP package and is characterized for operation over the free-air temperature range of –40°C to +105°C.

Device Information(1)

PART NUMBER	PACKAGE	BODY SIZE (NOM)
TPS22970YZPT	DSBGA (8)	1.90 mm × 0.90 mm

(1) For all available packages, see the orderable addendum at the end of the data sheet.

Typical Application

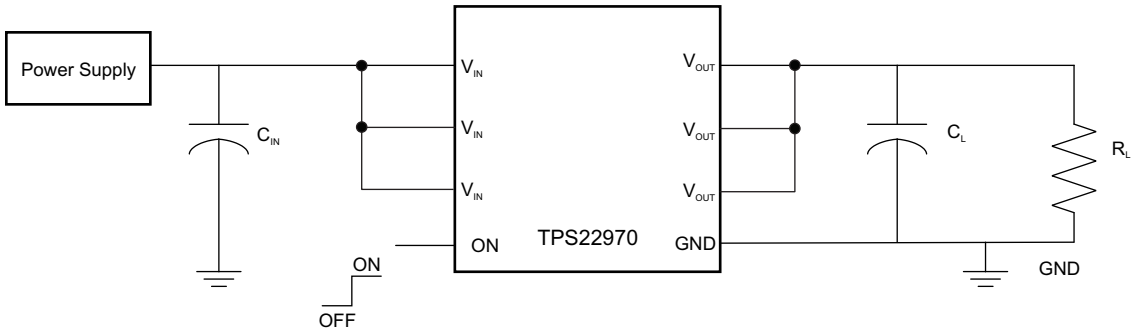

Copyright © 2017, Texas Instruments Incorporated

An IMPORTANT NOTICE at the end of this data sheet addresses availability, warranty, changes, use in safety-critical applications, intellectual property matters and other important disclaimers. PRODUCTION DATA.

Table of Contents

1 Features ... 1
2 Applications ... 1
3 Description ... 1
4 Revision History ... 2
5 Pin Configuration and Functions ... 3
6 Specifications ... 4
6.1 Absolute Maximum Ratings ... 4
6.2 ESD Ratings ... 4
6.3 Recommended Operating Conditions ... 4
6.4 Thermal Information ... 4
6.5 Electrical Characteristics ... 5
6.6 Switching Characteristics ... 6
6.7 Typical DC Characteristics ... 7
6.8 Typical AC Characteristics ... 7
7 Parameter Measurement Information ... 10
8 Detailed Description ... 11
8.1 Overview ... 11
8.2 Functional Block Diagram ... 11
8.3 Feature Description ... 11
8.4 Device Functional Modes ... 11
9 Application and Implementation ... 12
9.1 Application Information ... 12
9.2 Typical Application ... 12
10 Power Supply Recommendations ... 15
11 Layout ... 15
11.1 Layout Guidelines ... 15
11.2 Layout Example ... 15
12 Device and Documentation Support ... 16
12.1 Documentation Support ... 16
12.2 Receiving Notification of Documentation Updates 16
12.3 Community Resources ... 16
12.4 Trademarks ... 16
12.5 Electrostatic Discharge Caution ... 16
12.6 Glossary ... 16
13 Mechanical, Packaging, and Orderable Information ... 17

4 Revision History

NOTE: Page numbers for previous revisions may differ from page numbers in the current version.

Changes from Original (May 2017) to Revision A	Page
• Changed device status from "Advance Information" to " Production Data"	1

Copyright © 2017, Texas Instruments Incorporated

5 Pin Configuration and Functions

YZP Package
8-Pin DSBGA
Laser Marking View

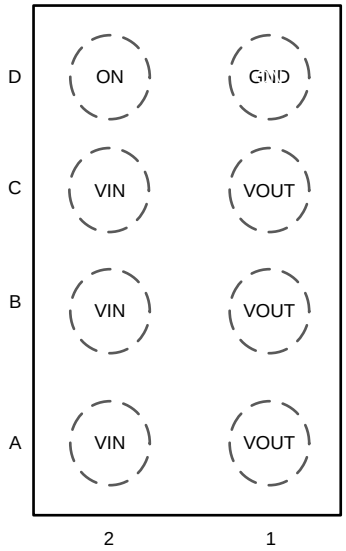

YZP Package
8-Pin DSBGA
Bump View

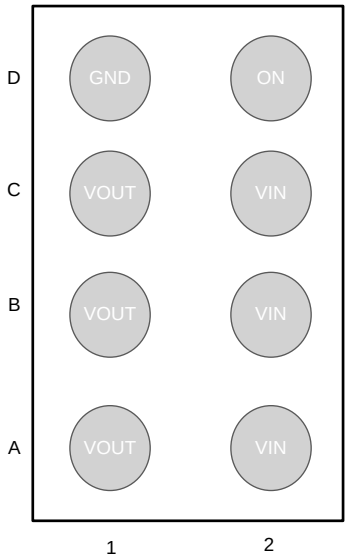

Pin Functions

PIN		TYPE	DESCRIPTION
NAME	NO.		
GND	D1	GND	Ground
ON	D2	I	Switch control input. Do not leave floating
V_{IN}	A2	I	Switch input
	B2		
	C2		
V_{OUT}	A1	O	Switch output
	B1		
	C1		

6 Specifications

6.1 Absolute Maximum Ratings

over operating free-air temperature range (unless otherwise noted)[1]

		MIN	MAX	UNIT
V_{IN}	Input voltage	–0.3	4	V
V_{OUT}	Output voltage	–0.3	4	V
V_{ON}	ON voltage	–0.3	4	V
I_{MAX}	Maximum continuous switch current		4	A
I_{PLS}	Maximum pulsed switch current, pulse < 300-µs, 2% duty cycle		6	A
T_J	Maximum junction temperature	Internally Limited		
T_{stg}	Storage temperature	–65	150	°C

(1) Stresses beyond those listed under *Absolute Maximum Ratings* may cause permanent damage to the device. These are stress ratings only, which do not imply functional operation of the device at these or any other conditions beyond those indicated under *Recommended Operating Conditions*. Exposure to absolute-maximum-rated conditions for extended periods may affect device reliability.

6.2 ESD Ratings

			VALUE	UNIT
$V_{(ESD)}$	Electrostatic discharge	Human-body model (HBM), per ANSI/ESDA/JEDEC JS-001[1]	±2000	V
		Charged-device model (CDM), per JEDEC specification JESD22-C101[2]	±1000	

(1) JEDEC document JEP155 states that 500-V HBM allows safe manufacturing with a standard ESD control process.
(2) JEDEC document JEP157 states that 250-V CDM allows safe manufacturing with a standard ESD control process.

6.3 Recommended Operating Conditions

over operating free-air temperature range (unless otherwise noted)

		MIN	MAX	UNIT
V_{IN}	Input voltage	0.65	3.6	V
V_{OUT}	Output voltage		V_{IN}	V
V_{IH}	High-level input voltage, ON	0.9	3.6	V
V_{IL}	Low-level input voltage, ON	0	0.45	V
T_J	Operating temperature	–40	125	°C
T_A	Operating free-air temperature	–40	105	°C

6.4 Thermal Information

THERMAL METRIC [1]		TPS22970 YZP (DSBGA) 8 PINS	UNIT
$R_{\theta JA}$	Junction-to-ambient thermal resistance	130	°C/W
$R_{\theta JC(top)}$	Junction-to-case (top) thermal resistance	54	°C/W
$R_{\theta JB}$	Junction-to-board thermal resistance	51	°C/W
ψ_{JT}	Junction-to-top characterization parameter	1	°C/W
ψ_{JB}	Junction-to-board characterization parameter	50	°C/W

(1) For more information about traditional and new thermal metrics, see the *Semiconductor and IC Package Thermal Metrics* application report.

Copyright © 2017, Texas Instruments Incorporated

6.5 Electrical Characteristics

Unless otherwise noted, V_{IN} = 0.65 V to 3.6 V

PARAMETER		TEST CONDITIONS		T_A	MIN	TYP	MAX	UNIT
I_Q	Quiescent current	V_{OUT} = Open, Switch enabled	V_{IN} > 1.2 V	–40°C to +85°C		30	65	µA
				–40°C to +105°C			75	
			V_{IN} ≤ 1.2 V	–40°C to +85°C		20	50	
				–40°C to +105°C			55	
I_{SD}	Shutdown current	V_{OUT} = GND, Switch disabled	V_{IN} > 1.8 V	–40°C to +85°C		1	7.5	µA
				–40°C to +105°C			18	
			V_{IN} ≤ 1.8 V	–40°C to +85°C		0.9	5	
				–40°C to +105°C			9.5	
R_{ON}	ON-resistance	I_{OUT} = –200 mA	V_{IN} ≥ 1.8 V	25°C		4.7	8.5	mΩ
				–40°C to +85°C			9.5	
				–40°C to +105°C			11.5	
			V_{IN} = 1.2 V	25°C		4.9	9.1	
				–40°C to +85°C			10.1	
				–40°C to +105°C			12.1	
			V_{IN} = 1.05 V	25°C		5.1	9.4	
				–40°C to +85°C			10.4	
				–40°C to +105°C			12.4	
			V_{IN} = 0.65 V	25°C		6.4	11.5	
				–40°C to +85°C			12.5	
				–40°C to +105°C			14.5	
R_{PD}	Output pull down resistance(1)	I_{OUT} = 3 mA, Switch disabled	V_{IN} = 3.6 V	–40°C to +105°C		150		Ω
			V_{IN} = 0.65 V	–40°C to +105°C		710		Ω
I_{ON}	ON input leakage current	V_{ON} = 0 V to 3.6 V		–40°C to +105°C			0.1	µA
T_{SD}	Thermal shutdown	Junction temperature rising				170		°C
$T_{SD, HYS}$	Thermal shutdown hysteresis	Junction temperature falling				30		°C

(1) See the *Quick Output Discharge (QOD)* section.

6.6 Switching Characteristics

over operating free-air temperature range (unless otherwise noted)

PARAMETER		TEST CONDITIONS	MIN	TYP	MAX	UNIT
V_{IN} = 3.6 V, V_{ON} = 3.6 V, T_A = 25°C (unless otherwise noted)						
t_{ON}	Turn-ON time	C_L = 0.1 µF, R_L = 10 Ω		1530		µs
t_{OFF}	Turn-OFF time	C_L = 0.1 µF, R_L = 10 Ω		3.2		
t_R	VOUT Rise time	C_L = 0.1 µF, R_L = 10 Ω		985		
t_F	VOUT Fall time	C_L = 0.1 µF, R_L = 10 Ω		1.8		
t_D	ON delay time	C_L = 0.1 µF, R_L = 10 Ω		550		
V_{IN} = 1.8 V, V_{ON} = 3.6 V, T_A = 25°C (unless otherwise noted)						
t_{ON}	Turn-ON time	C_L = 0.1 µF, R_L = 10 Ω		1170		µs
t_{OFF}	Turn-OFF time	C_L = 0.1 µF, R_L = 10 Ω		4.9		
t_R	VOUT Rise Time	C_L = 0.1 µF, R_L = 10 Ω		645		
t_F	VOUT Fall time	C_L = 0.1 µF, R_L = 10 Ω		2.2		
t_D	ON delay time	C_L = 0.1 µF, R_L = 10 Ω		525		
V_{IN} = 0.65 V, V_{ON} = 3.6 V, T_A = 25°C (unless otherwise noted)						
t_{ON}	Turn-ON time	C_L = 0.1 µF, R_L = 10 Ω		815		µs
t_{OFF}	Turn-OFF time	C_L = 0.1 µF, R_L = 10 Ω		61		
t_R	VOUT Rise time	C_L = 0.1 µF, R_L = 10 Ω		320		
t_F	VOUT Fall time	C_L = 0.1 µF, R_L = 10 Ω		6.3		
t_D	ON delay time	C_L = 0.1 µF, R_L = 10 Ω		495		

Copyright © 2017, Texas Instruments Incorporated

6.7 Typical DC Characteristics

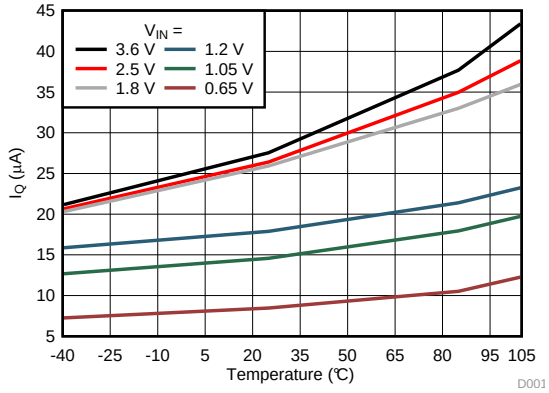

V_{ON} = 3.6 V V_{OUT} = Open

Figure 1. Quiescent Current vs Temperature

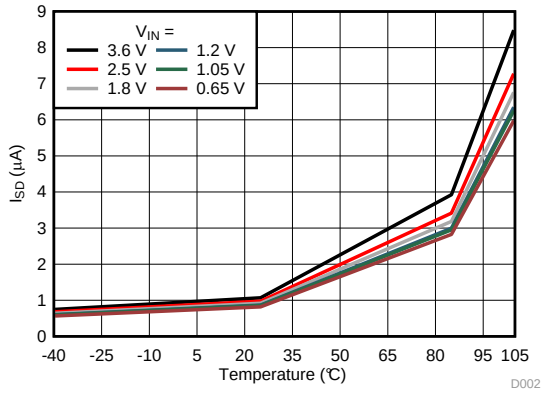

V_{ON} = 0 V V_{OUT} = GND

Figure 2. Input Shutdown Current vs Temperature

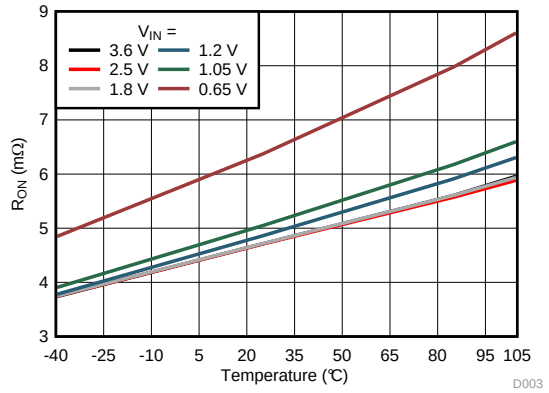

V_{ON} = 3.6 V I_{OUT} = -200 mA

Figure 3. On-Resistance vs Temperature

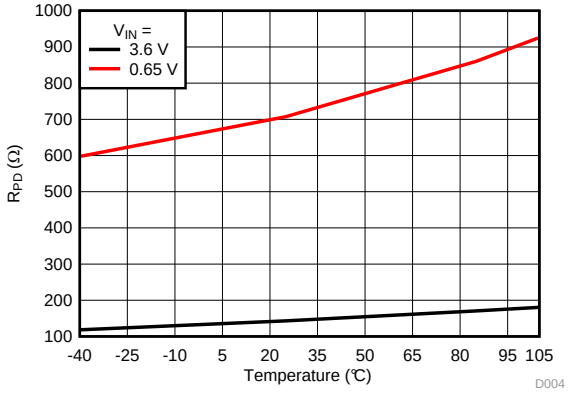

V_{ON} = 0 V I_{OUT} = 3 mA

Figure 4. Output Pull-Down Resistance vs Temperature

6.8 Typical AC Characteristics

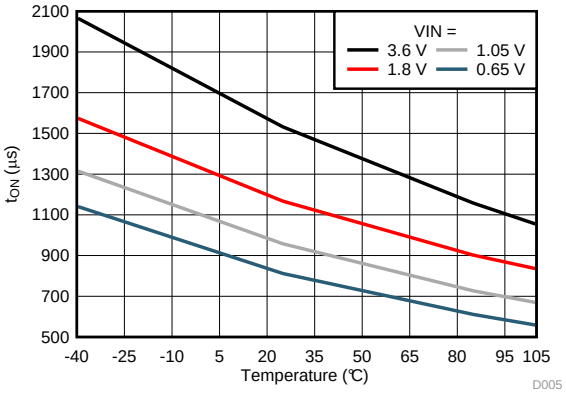

Figure 5. Turn-ON Time vs Temperature

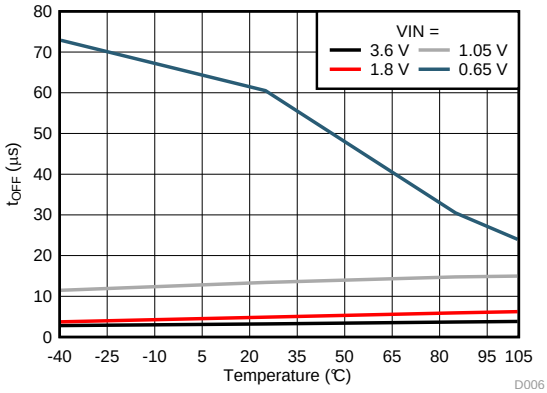

Figure 6. Turn-OFF Time vs Temperature

Typical AC Characteristics (continued)

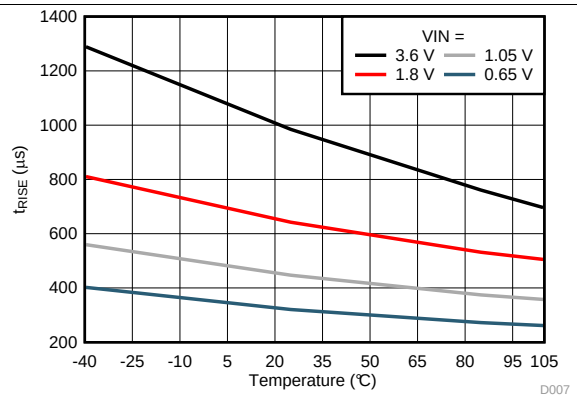

Figure 7. Rise Time vs Temperature

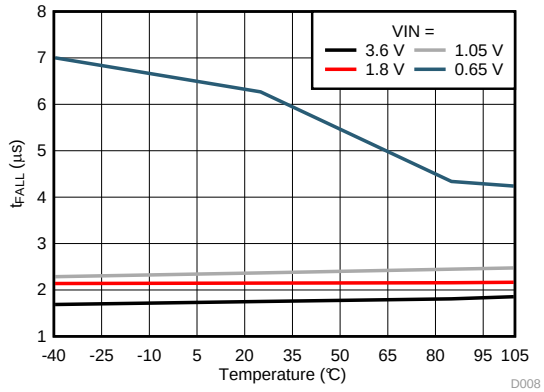

R_L = 10 Ω C_L = 0.1 µF

Figure 8. Fall Time vs Temperature

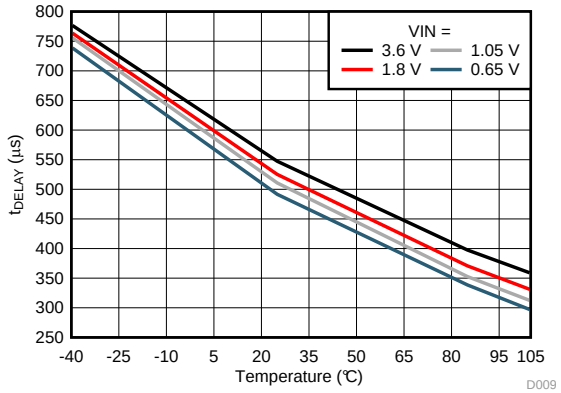

R_L = 10 Ω C_L = 0.1 µF

Figure 9. Delay Time vs Temperature

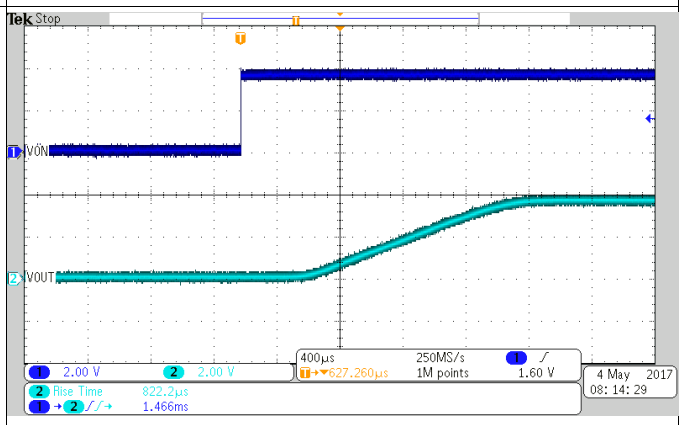

R_L = 10 Ω T_A = 25°C C_L = 0.1 µF

Figure 10. Turn-ON Response at 3.6 V_{IN}

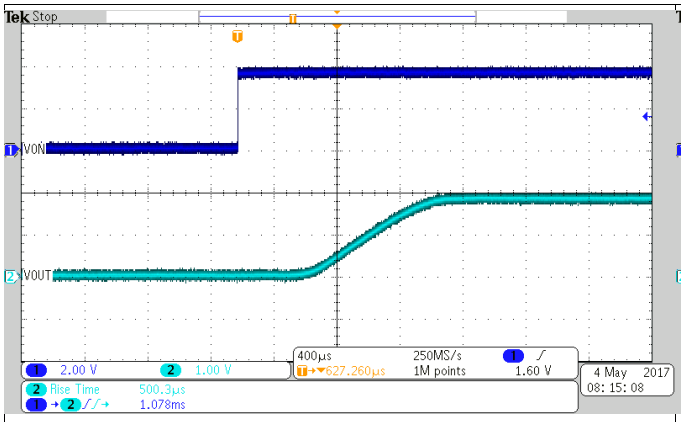

R_L = 10 Ω T_A = 25°C C_L = 0.1 µF

Figure 11. Turn-ON Response at 1.8 V_{IN}

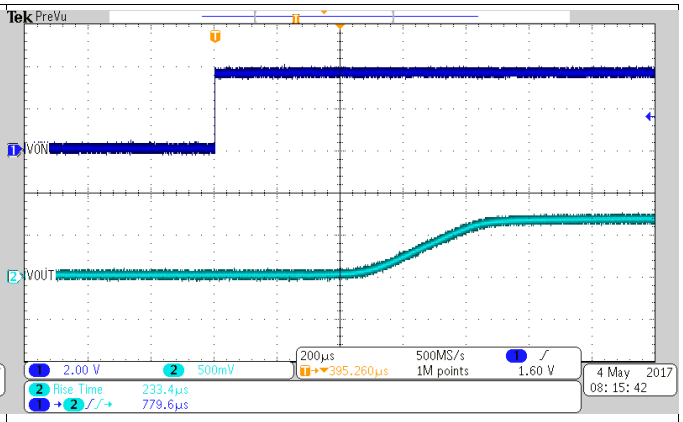

R_L = 10 Ω T_A = 25°C C_L = 0.1 µF

Figure 12. Turn-ON Response at 0.65 V_{IN}

Copyright © 2017, Texas Instruments Incorporated

Typical AC Characteristics (continued)

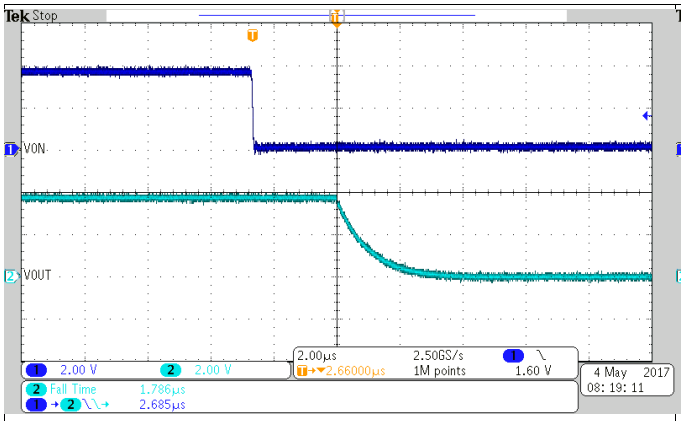

R_L = 10 Ω T_A = 25°C C_L = 0.1 µF

Figure 13. Turn-OFF Response at 3.6 V_{IN}

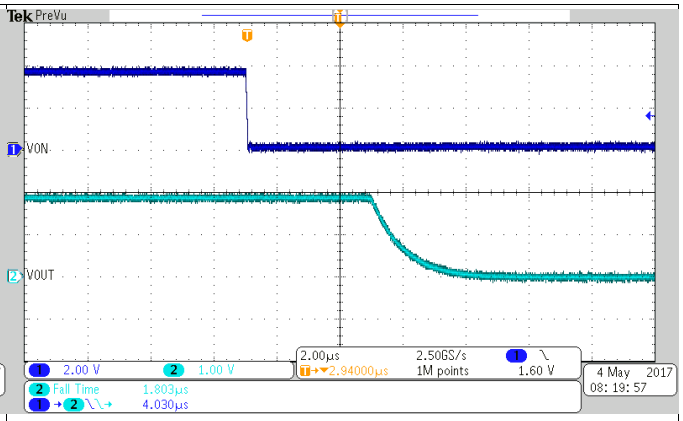

R_L = 10 Ω T_A = 25°C C_L = 0.1 µF

Figure 14. Turn-OFF Response at 1.8 V_{IN}

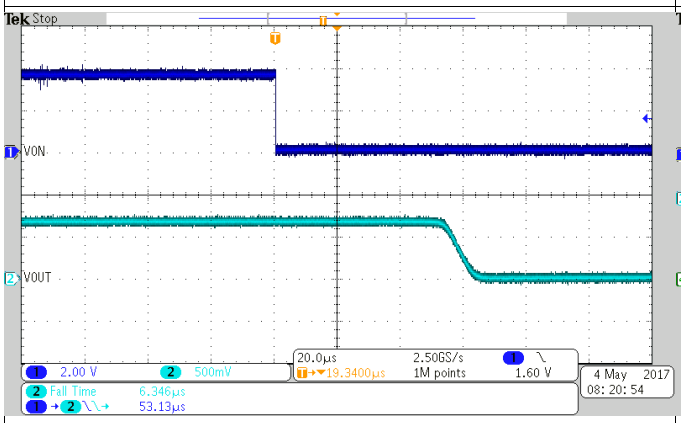

R_L = 10 Ω T_A = 25°C C_L = 0.1 µF

Figure 15. Turn-OFF Response at 0.65 V_{IN}

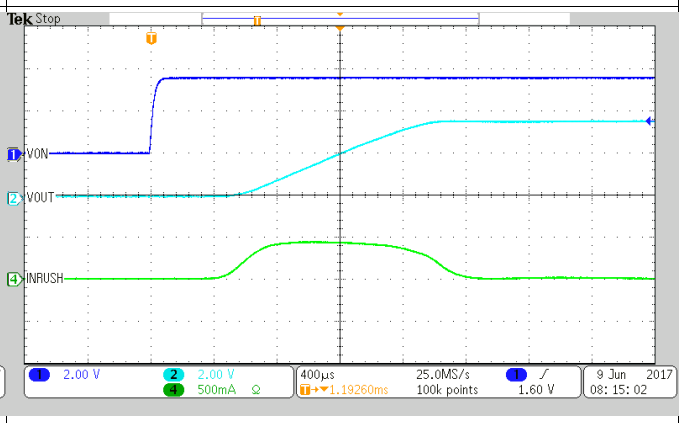

R_L = OPEN T_A = 25°C C_L = 147 µF

Figure 16. Inrush Current at 3.6 V_{IN}

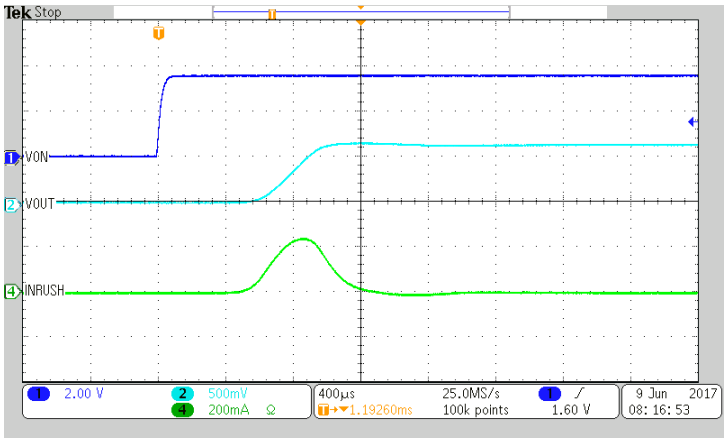

R_L = OPEN T_A = 25°C C_L = 147 µF

Figure 17. Inrush Current at 0.65 V_{IN}

7 Parameter Measurement Information

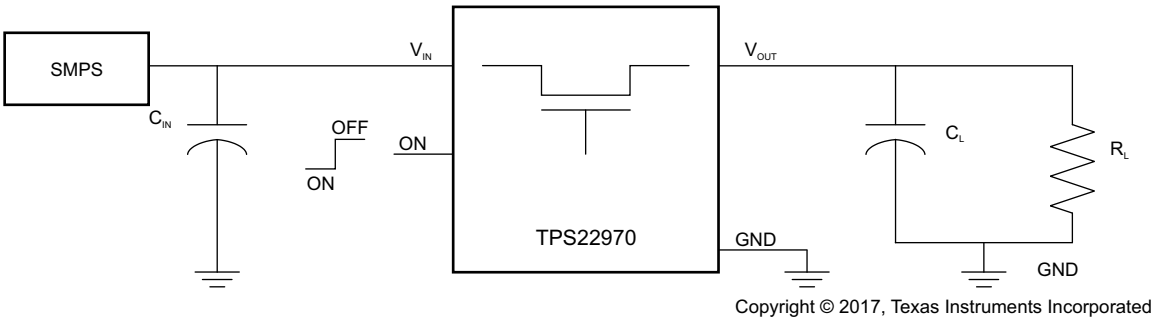

Figure 18. TPS22970 Test Circuit

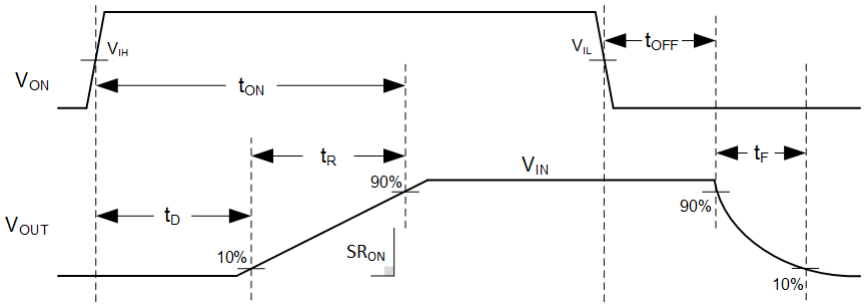

Figure 19. t_{ON} and t_{OFF} Waveforms

Copyright © 2017, Texas Instruments Incorporated

8 Detailed Description

8.1 Overview

The TPS22970 is a single channel, 4-A load switch in a small, space-saving WCSP-8 package. This device implements a low resistance N-channel MOSFET with a controlled rise time for applications that need to limit the inrush current.

This device is also designed to have very low leakage current during off state, which prevents downstream circuits from pulling high standby current from the supply. Integrated control logic, driver, power supply, and output discharge FET eliminates the need for additional external components, which reduces solution size and bill of materials (BOM) count.

8.2 Functional Block Diagram

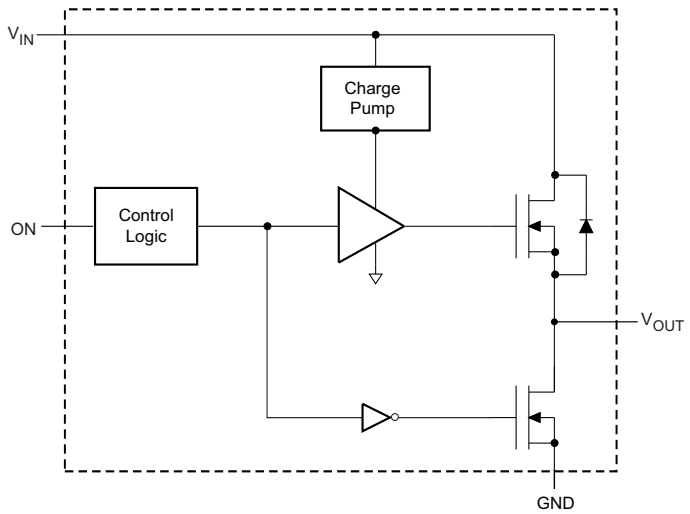

8.3 Feature Description

8.3.1 On and Off Control

The ON pin controls the state of the switch. Asserting ON high enables the switch. ON has a low threshold, making it capable of interfacing with low-voltage signals. The ON pin is compatible with standard GPIO logic. It can be used with any microcontroller with 1.2-V, 1.8-V, 2.5-V or 3.3-V GPIOs. This pin does not have an internal bias and must not be left floating for proper functionality.

8.3.2 Quick Output Discharge (QOD)

The TPS22970 includes a QOD feature. When the switch is disabled, a discharge resistor is connected between VOUT and GND. This resistor has a typical value of 150 Ω and prevents the output from floating while the switch is disabled. The QOD pull-down resistance can vary with input voltage and temperature, see Figure 4

8.4 Device Functional Modes

Table 1 lists the functional modes for the TPS22970.

Table 1. Function Table

TPS22970		
ON-Pin	**V_{IN} to V_{OUT}**	**V_{OUT} to GND**
Below V_{IL}	OFF	ON
Above V_{IH}	ON	OFF

9 Application and Implementation

NOTE

Information in the following applications sections is not part of the TI component specification, and TI does not warrant its accuracy or completeness. TI's customers are responsible for determining suitability of components for their purposes. Customers should validate and test their design implementation to confirm system functionality.

9.1 Application Information

9.1.1 Thermal Consideration

It is recommended to limit the junction temperature (T_J) to below 125°C. To calculate the maximum allowable dissipation, $P_{D(max)}$ for a given output current and ambient temperature, use Equation 1 as a guideline.

$$P_{D(max)} = \frac{T_{J(max)} - T_A}{\theta_{JA}} \quad (1)$$

where

- $P_{D(max)}$ is maximum allowable power dissipation
- $T_{J(max)}$ is maximum allowable junction temperature
- T_A is ambient temperature of the device
- Θ_{JA} is junction to air thermal impedance. See the *Thermal Information* section. This parameter is highly dependent upon board layout

9.2 Typical Application

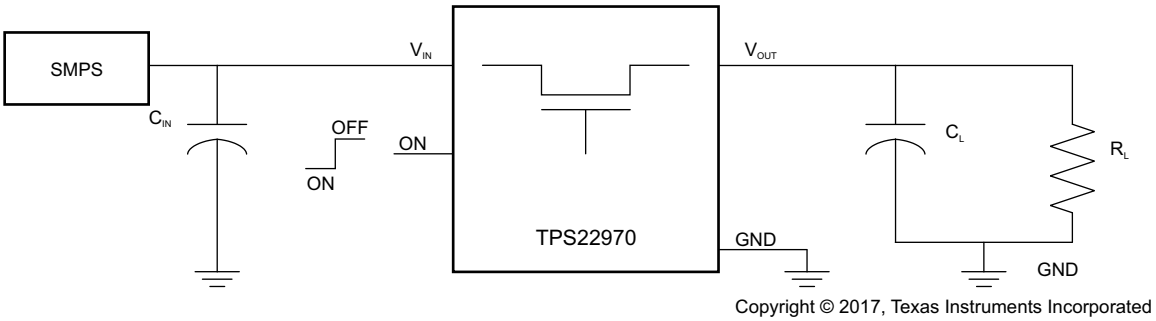

Figure 20. Typical Application Circuit

Copyright © 2017, Texas Instruments Incorporated

Typical Application (continued)

9.2.1 Design Requirements

For this design example, below, use the input parameters shown in Table 2.

Table 2. Design Parameters

DESIGN PARAMETER	EXAMPLE VALUE
V_{IN}	0.65 V to 3.6 V
I_{LOAD}	10 mA
Load Capacitance (C_L)	800 µF
Maximum voltage drop	1%
Maximum Inrush Current	2.5 A

9.2.2 Detailed Design Procedure

9.2.2.1 Maximum Voltage Drop and On-Resistance

At 3.6-V input voltage, with a maximum voltage drop tolerance of 1%, the TPS22970 has a typical R_{ON} of 4.7 mΩ. The rail is supplying 10 mA of current; the voltage drop for a rail is calculated based on Equation 2 and Equation 3.

$$V_{DROP} = R_{ON} \times I_{LOAD} \quad (2)$$

$$V_{DROP} = 0.047 \text{ mV} \quad (3)$$

The maximum voltage drop is 1% which is 36 mV. The voltage drop caused by the load current across the on resistance is 0.047 mV.

9.2.2.2 Managing Inrush Current

When the switch is enabled, the output capacitors must be charged up from 0 V to V_{IN}. This charge arrives in the form of inrush current. Inrush current may be calculated using Equation 4.

$$I_{INRUSH} = C_L \times SR = \frac{C_L \times 0.8 \times V_{IN}}{t_R}$$

where

- I_{INRUSH} is the Inrush current
- C_L is the Load capacitance
- SR is the Output Slew Rate
- V_{IN} is the Input voltage
- t_R is the Rise time (4)

The typical rise time is 985 µs at V_{IN} = 3.6 V. When C_L = 800 µF, the expected inrush current limit at the typical rise time is 2.34 A.

The typical rise time is 320 µs at V_{IN} = 0.65 V. When C_L = 800 µF, the expected inrush current limit at the typical rise time is 1.3 A.

9.2.3 Application Curves

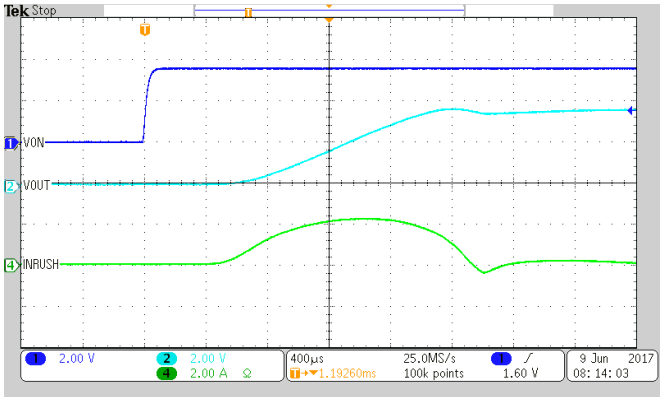

V_{IN} = 3.6 V V_{ON} = 3.6 V C_{IN} = 1 µF
R_L = OPEN T_A = 25°C C_L = 800 µF

Figure 21. TPS22970 Inrush Current at 3.6 V_{IN} With C_L = 800 µF

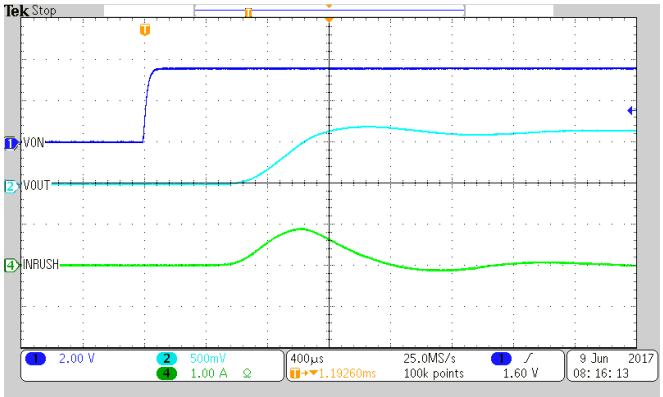

V_{IN} = 0.65 V V_{ON} = 3.6 V C_{IN} = 1 µF
R_L = OPEN T_A = 25°C C_L = 800 µF

Figure 22. TPS22970 Inrush Current at 0.65 V_{IN} With C_L = 800 µF

Copyright © 2017, Texas Instruments Incorporated

10 Power Supply Recommendations

The device is designed to operate from a VIN range of 0.65 V to 3.6 V. The VIN power supply must be well regulated and placed as close to the device terminal as possible. The power supply must be able to withstand all transient load current steps. In most situations, using an input capacitance of 1 µF is sufficient to prevent the supply voltage from dipping when the switch is turned on. In cases where the power supply is slow to respond to a large transient current or large load current step, additional bulk capacitance may be required on the input.

11 Layout

11.1 Layout Guidelines

All traces must be as short as possible for best performance. Using wide traces for V_{IN}, V_{OUT}, and GND helps minimize the parasitic electrical effects along with minimizing the case to ambient thermal impedance.

11.2 Layout Example

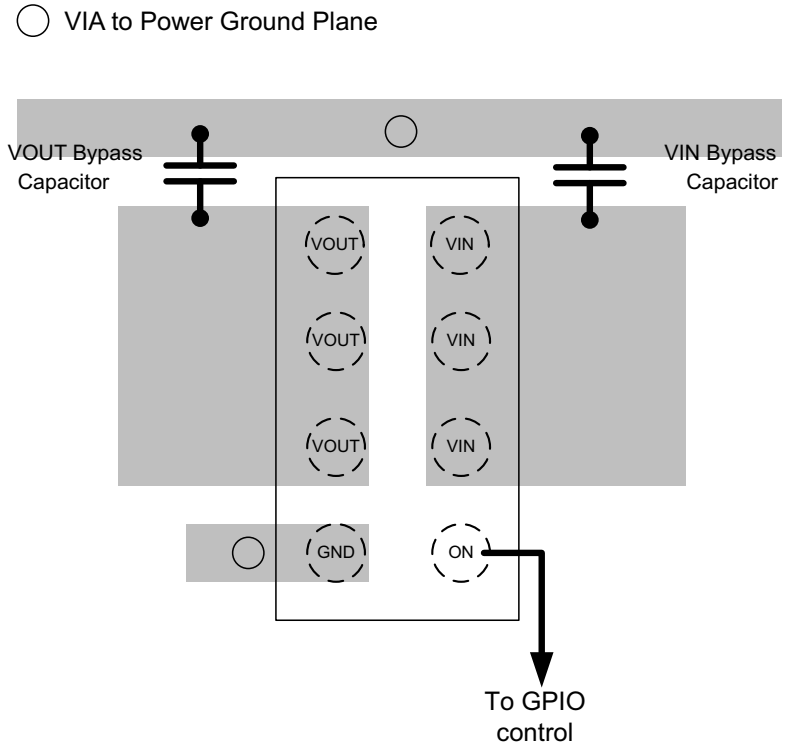

Figure 23. TPS22970 Package Layout

12 Device and Documentation Support

12.1 Documentation Support

12.1.1 Related Documentation

For related documentation see the following:

TPS22970 Load Switch Evaluation Module

12.2 Receiving Notification of Documentation Updates

To receive notification of documentation updates, navigate to the device product folder on ti.com. In the upper right corner, click on *Alert me* to register and receive a weekly digest of any product information that has changed. For change details, review the revision history included in any revised document.

12.3 Community Resources

The following links connect to TI community resources. Linked contents are provided "AS IS" by the respective contributors. They do not constitute TI specifications and do not necessarily reflect TI's views; see TI's Terms of Use.

TI E2E™ Online Community ***TI's Engineer-to-Engineer (E2E) Community.*** Created to foster collaboration among engineers. At e2e.ti.com, you can ask questions, share knowledge, explore ideas and help solve problems with fellow engineers.

Design Support ***TI's Design Support*** Quickly find helpful E2E forums along with design support tools and contact information for technical support.

12.4 Trademarks

E2E is a trademark of Texas Instruments.
NanoFree is a trademark of Nanofree TM.
All other trademarks are the property of their respective owners.

12.5 Electrostatic Discharge Caution

This integrated circuit can be damaged by ESD. Texas Instruments recommends that all integrated circuits be handled with appropriate precautions. Failure to observe proper handling and installation procedures can cause damage.

ESD damage can range from subtle performance degradation to complete device failure. Precision integrated circuits may be more susceptible to damage because very small parametric changes could cause the device not to meet its published specifications.

12.6 Glossary

SLYZ022 — *TI Glossary*.

This glossary lists and explains terms, acronyms, and definitions.

Copyright © 2017, Texas Instruments Incorporated

13 Mechanical, Packaging, and Orderable Information

The following pages include mechanical, packaging, and orderable information. This information is the most current data available for the designated devices. This data is subject to change without notice and revision of this document. For browser-based versions of this data sheet, refer to the left-hand navigation.

YZP (R–XBGA–N8) DIE–SIZE BALL GRID ARRAY

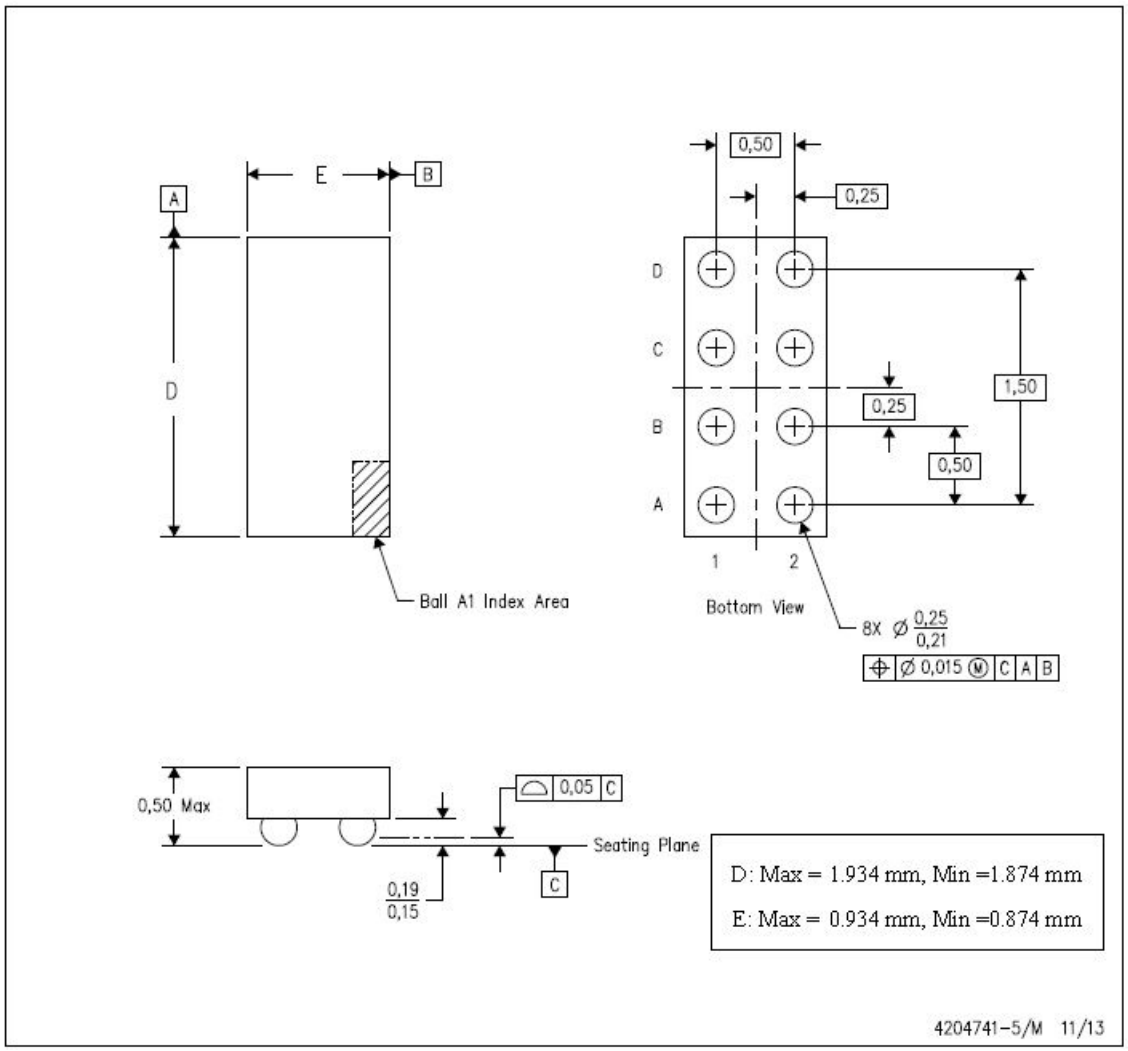

(1) All linear dimensions are in millimeters. Dimensioning and tolerancing per ASME Y14.5M-1994.

(2) This drawing is subject to change without notice.

(3) NanoFree™ package configuration.

PACKAGING INFORMATION

Orderable part number	Status (1)	Material type (2)	Package | Pins	Package qty | Carrier	RoHS (3)	Lead finish/ Ball material (4)	MSL rating/ Peak reflow (5)	Op temp (°C)	Part marking (6)
TPS22970YZPR	Active	Production	DSBGA (YZP) | 8	3000 | LARGE T&R	Yes	SAC396	Level-1-260C-UNLIM	-40 to 105	1CNI
TPS22970YZPR.A	Active	Production	DSBGA (YZP) | 8	3000 | LARGE T&R	Yes	SAC396	Level-1-260C-UNLIM	-40 to 105	1CNI
TPS22970YZPT	Active	Production	DSBGA (YZP) | 8	250 | SMALL T&R	Yes	SAC396	Level-1-260C-UNLIM	-40 to 105	1CNI
TPS22970YZPT.A	Active	Production	DSBGA (YZP) | 8	250 | SMALL T&R	Yes	SAC396	Level-1-260C-UNLIM	-40 to 105	1CNI

(1) **Status:** For more details on status, see our product life cycle.

(2) **Material type:** When designated, preproduction parts are prototypes/experimental devices, and are not yet approved or released for full production. Testing and final process, including without limitation quality assurance, reliability performance testing, and/or process qualification, may not yet be complete, and this item is subject to further changes or possible discontinuation. If available for ordering, purchases will be subject to an additional waiver at checkout, and are intended for early internal evaluation purposes only. These items are sold without warranties of any kind.

(3) **RoHS values:** Yes, No, RoHS Exempt. See the TI RoHS Statement for additional information and value definition.

(4) **Lead finish/Ball material:** Parts may have multiple material finish options. Finish options are separated by a vertical ruled line. Lead finish/Ball material values may wrap to two lines if the finish value exceeds the maximum column width.

(5) **MSL rating/Peak reflow:** The moisture sensitivity level ratings and peak solder (reflow) temperatures. In the event that a part has multiple moisture sensitivity ratings, only the lowest level per JEDEC standards is shown. Refer to the shipping label for the actual reflow temperature that will be used to mount the part to the printed circuit board.

(6) **Part marking:** There may be an additional marking, which relates to the logo, the lot trace code information, or the environmental category of the part.

Multiple part markings will be inside parentheses. Only one part marking contained in parentheses and separated by a "~" will appear on a part. If a line is indented then it is a continuation of the previous line and the two combined represent the entire part marking for that device.

Important Information and Disclaimer: The information provided on this page represents TI's knowledge and belief as of the date that it is provided. TI bases its knowledge and belief on information provided by third parties, and makes no representation or warranty as to the accuracy of such information. Efforts are underway to better integrate information from third parties. TI has taken and continues to take reasonable steps to provide representative and accurate information but may not have conducted destructive testing or chemical analysis on incoming materials and chemicals. TI and TI suppliers consider certain information to be proprietary, and thus CAS numbers and other limited information may not be available for release.

In no event shall TI's liability arising out of such information exceed the total purchase price of the TI part(s) at issue in this document sold by TI to Customer on an annual basis.

TAPE AND REEL INFORMATION

REEL DIMENSIONS

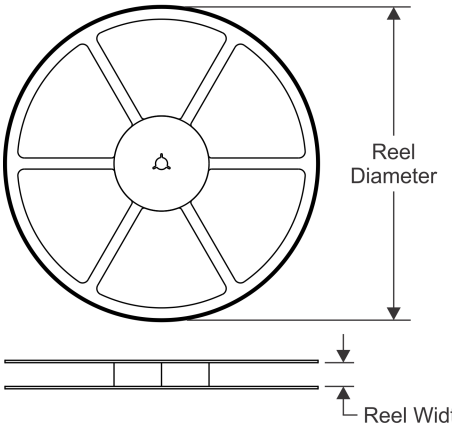

TAPE DIMENSIONS

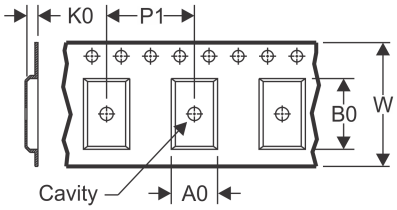

A0	Dimension designed to accommodate the component width
B0	Dimension designed to accommodate the component length
K0	Dimension designed to accommodate the component thickness
W	Overall width of the carrier tape
P1	Pitch between successive cavity centers

QUADRANT ASSIGNMENTS FOR PIN 1 ORIENTATION IN TAPE

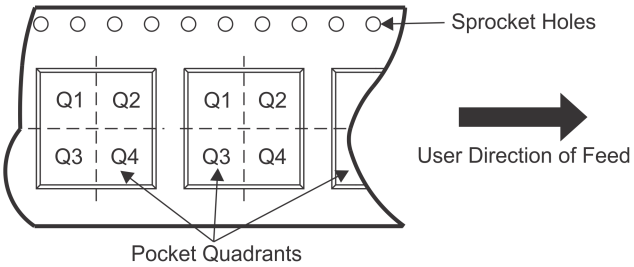

*All dimensions are nominal

Device	Package Type	Package Drawing	Pins	SPQ	Reel Diameter (mm)	Reel Width W1 (mm)	A0 (mm)	B0 (mm)	K0 (mm)	P1 (mm)	W (mm)	Pin1 Quadrant
TPS22970YZPR	DSBGA	YZP	8	3000	180.0	8.4	1.02	2.02	0.63	2.0	8.0	Q1
TPS22970YZPT	DSBGA	YZP	8	250	180.0	8.4	1.02	2.02	0.63	2.0	8.0	Q1

TAPE AND REEL BOX DIMENSIONS

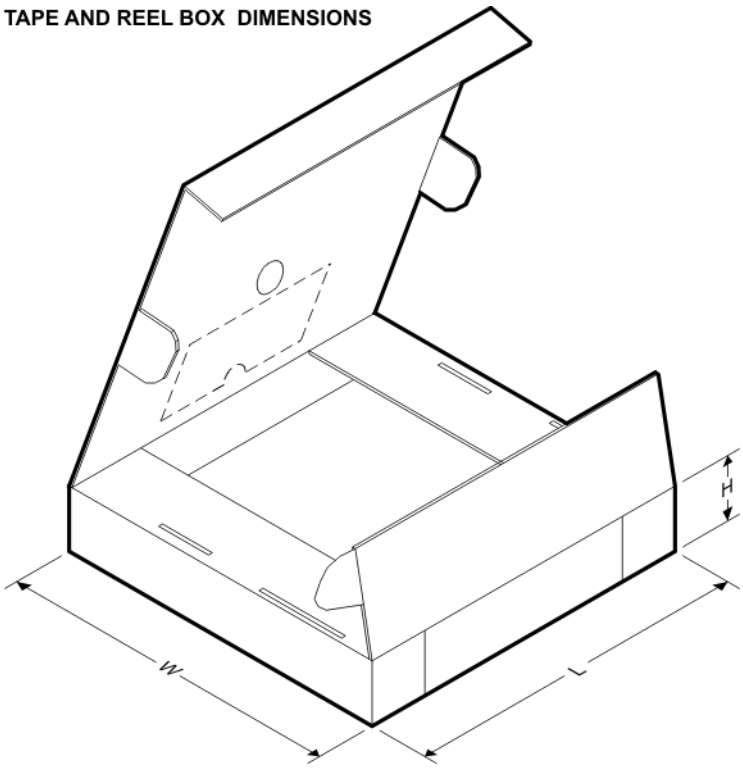

*All dimensions are nominal

Device	Package Type	Package Drawing	Pins	SPQ	Length (mm)	Width (mm)	Height (mm)
TPS22970YZPR	DSBGA	YZP	8	3000	182.0	182.0	20.0
TPS22970YZPT	DSBGA	YZP	8	250	182.0	182.0	20.0

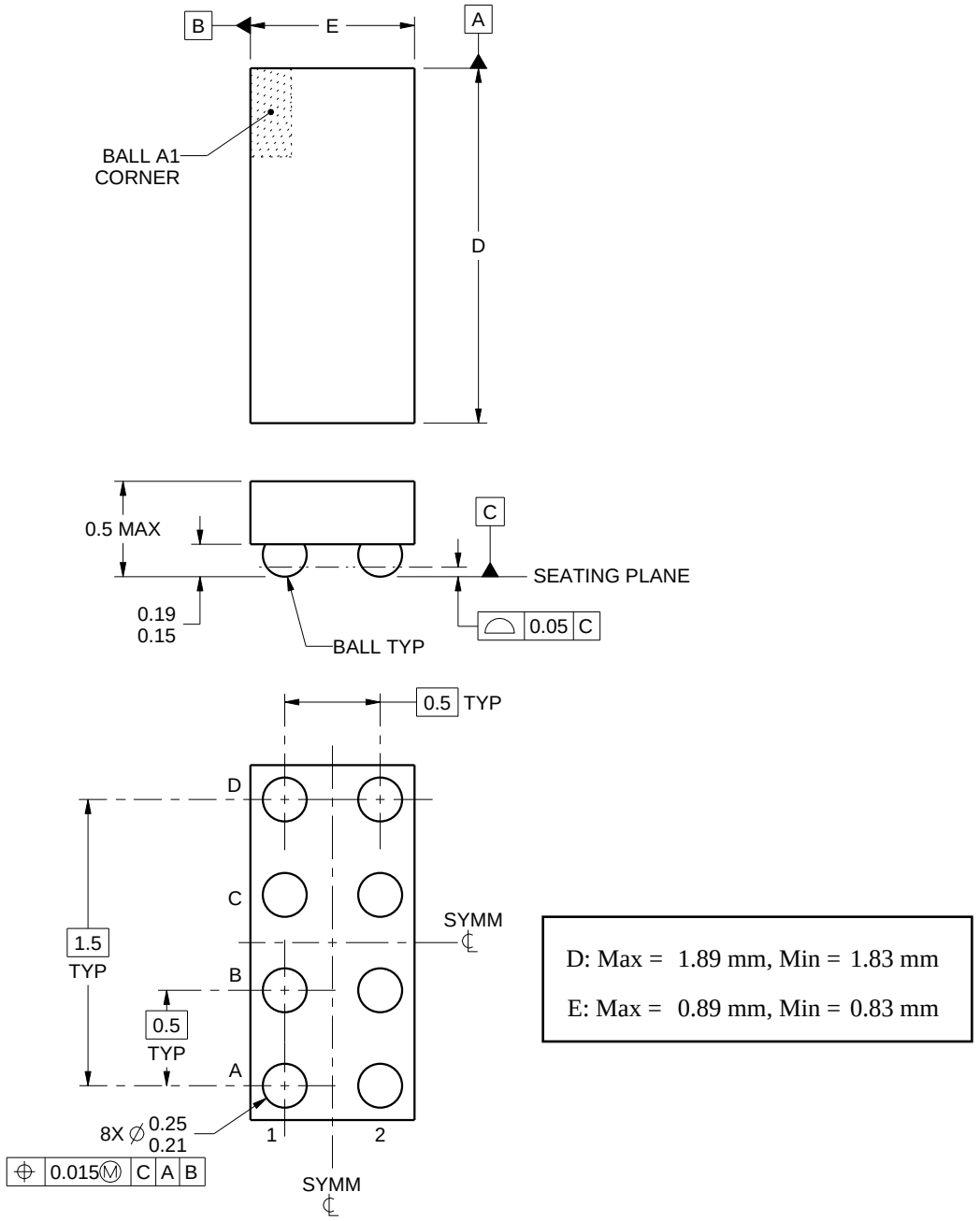

NOTES:

1. All linear dimensions are in millimeters. Any dimensions in parenthesis are for reference only. Dimensioning and tolerancing per ASME Y14.5M.
2. This drawing is subject to change without notice.

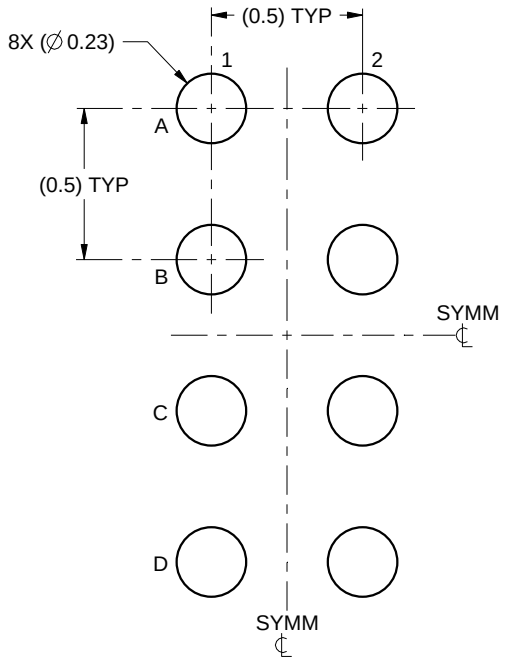

LAND PATTERN EXAMPLE
SCALE:40X

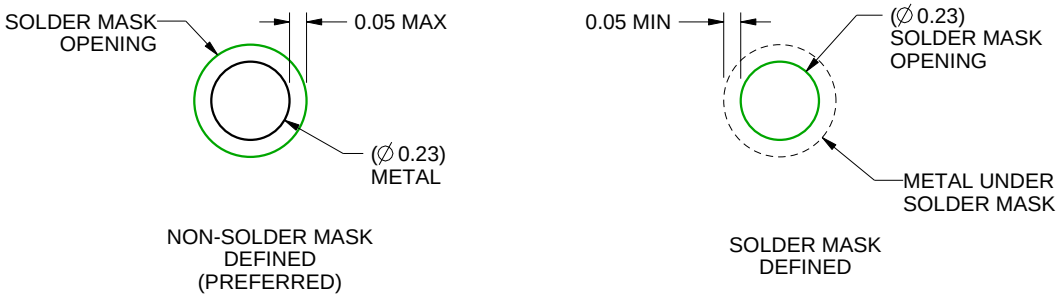

SOLDER MASK DETAILS
NOT TO SCALE

4223082/A 07/2016

NOTES: (continued)

3. Final dimensions may vary due to manufacturing tolerance considerations and also routing constraints.
   For more information, see Texas Instruments literature number SNVA009 (www.ti.com/lit/snva009).

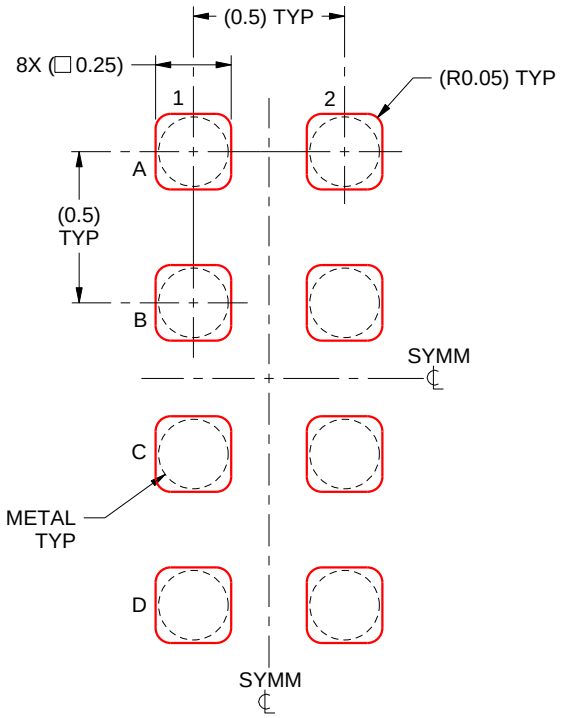

SOLDER PASTE EXAMPLE
BASED ON 0.1 mm THICK STENCIL
SCALE:40X

4223082/A 07/2016

NOTES: (continued)

4. Laser cutting apertures with trapezoidal walls and rounded corners may offer better paste release.

IMPORTANT NOTICE AND DISCLAIMER

TI PROVIDES TECHNICAL AND RELIABILITY DATA (INCLUDING DATA SHEETS), DESIGN RESOURCES (INCLUDING REFERENCE DESIGNS), APPLICATION OR OTHER DESIGN ADVICE, WEB TOOLS, SAFETY INFORMATION, AND OTHER RESOURCES “AS IS” AND WITH ALL FAULTS, AND DISCLAIMS ALL WARRANTIES, EXPRESS AND IMPLIED, INCLUDING WITHOUT LIMITATION ANY IMPLIED WARRANTIES OF MERCHANTABILITY, FITNESS FOR A PARTICULAR PURPOSE OR NON-INFRINGEMENT OF THIRD PARTY INTELLECTUAL PROPERTY RIGHTS.

These resources are intended for skilled developers designing with TI products. You are solely responsible for (1) selecting the appropriate TI products for your application, (2) designing, validating and testing your application, and (3) ensuring your application meets applicable standards, and any other safety, security, regulatory or other requirements.

These resources are subject to change without notice. TI grants you permission to use these resources only for development of an application that uses the TI products described in the resource. Other reproduction and display of these resources is prohibited. No license is granted to any other TI intellectual property right or to any third party intellectual property right. TI disclaims responsibility for, and you will fully indemnify TI and its representatives against, any claims, damages, costs, losses, and liabilities arising out of your use of these resources.

TI’s products are provided subject to TI’s Terms of Sale or other applicable terms available either on ti.com or provided in conjunction with such TI products. TI’s provision of these resources does not expand or otherwise alter TI’s applicable warranties or warranty disclaimers for TI products.

TI objects to and rejects any additional or different terms you may have proposed.

Mailing Address: Texas Instruments, Post Office Box 655303, Dallas, Texas 75265
Copyright © 2025, Texas Instruments Incorporated