SN74LVC165A-Q1 Automotive 8-Bit Parallel-Load Shift Registers

1 Features

- AEC-Q100 qualified for automotive applications:
  - Device temperature grade 1: -40°C to +125°C
  - Device HBM ESD classification level 2
  - Device CDM ESD classification level C4B
- Operating range from 1.1V to 3.6V
- Over-voltage tolerant inputs support up to 5.5V independent of V_{CC}
- Supports partial-power-down with back drive protection (I_{off})
- High push-pull output drive strength:
  - ±24mA at 3.3V
  - ±8mA at 2.3V
  - ±4mA at 1.65V
- Maximum propagation delay of 20ns at 3.3V
- Latch-up performance exceeds 100mA per JESD78 and AEC-Q100-004

2 Applications

- Increase the number of inputs on a microcontroller
- Read in board revision

3 Description

The SN74LVC165A-Q1 contains one 8-bit parallel-load shift register. Data is loaded asynchronously using the shift or load (SH/$\overline{LD}$) select pin. The device includes a serial (SER) input to allow for daisy chaining, and a standard (Q_H) and inverted ($\overline{Q}_H$) output.

Package Information

PART NUMBER	PACKAGE(1)	PACKAGE SIZE(2)	BODY SIZE (NOM)(3)
SN74LVC165A-Q1	BQB (WQFN, 16)	3.5mm × 2.5mm	3.5mm × 2.5mm
	D (SOIC, 16)	9.9mm × 6mm	9.9mm × 3.9mm
	PW (TSSOP, 16)	5mm × 6.4mm	5mm × 4.4mm

(1) For more information, see Section 11.
(2) The package size (length × width) is a nominal value and includes pins, where applicable
(3) The body size (length × width) is a nominal value and does not include pins.

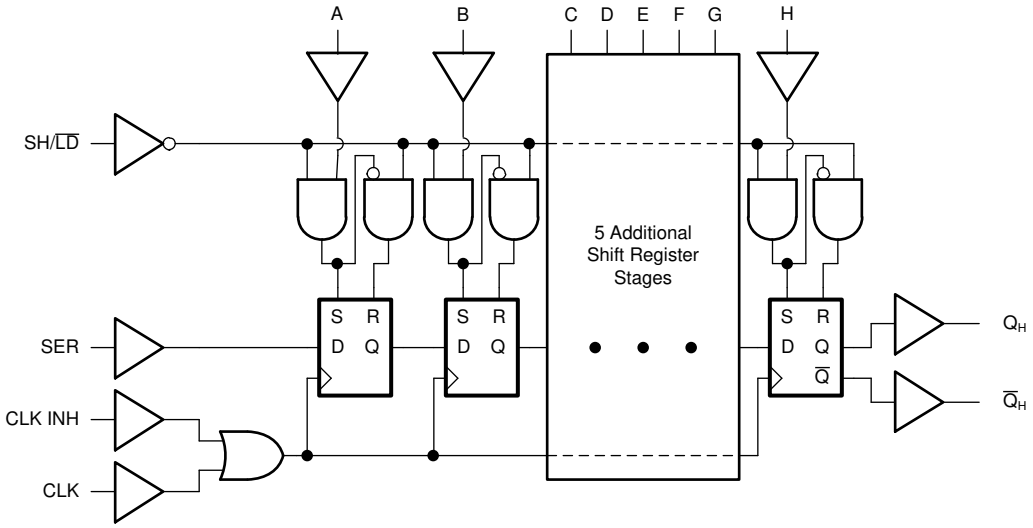

Functional Diagram

An IMPORTANT NOTICE at the end of this data sheet addresses availability, warranty, changes, use in safety-critical applications, intellectual property matters and other important disclaimers. PRODUCTION DATA.

Table of Contents

1 Features....1
2 Applications....1
3 Description....1
4 Pin Configuration and Functions....3
5 Specifications....4
5.1 Absolute Maximum Ratings....4
5.2 ESD Ratings....4
5.3 Recommended Operating Conditions....4
5.4 Thermal Information....5
5.5 Electrical Characteristics....5
5.6 Timing Characteristics....5
5.7 Switching Characteristics....8
5.8 Noise Characteristics....9
5.9 Typical Characteristics....9
6 Parameter Measurement Information....12
7 Detailed Description....14
7.1 Overview....14
7.2 Functional Block Diagram....14
7.3 Feature Description....15
7.4 Device Functional Modes....17
8 Application and Implementation....18
8.1 Application Information....18
8.2 Typical Application....18
8.3 Power Supply Recommendations....20
8.4 Layout....20
9 Device and Documentation Support....22
9.1 Documentation Support....22
9.2 Receiving Notification of Documentation Updates....22
9.3 Support Resources....22
9.4 Trademarks....22
9.5 Electrostatic Discharge Caution....22
9.6 Glossary....22
10 Revision History....22
11 Mechanical, Packaging, and Orderable Information....22

Copyright © 2024 Texas Instruments Incorporated

4 Pin Configuration and Functions

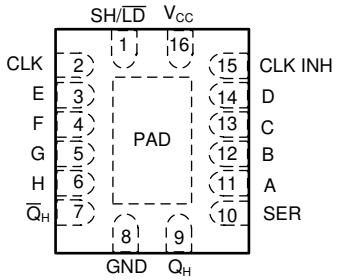

Figure 4-1. BQB Package, 16-Pin WQFN (Top View)

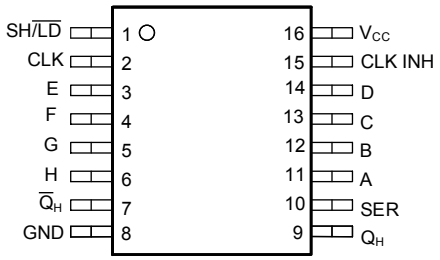

Figure 4-2. DYY or PW Package, 16-Pin VSSOP or TSSOP (Top View)

Table 4-1. Pin Functions

PIN		TYPE[1]	DESCRIPTION
NAME	NO.		
SH/$\overline{LD}$	1	I	Enable shifting when input is high, load data when input is low
CLK	2	I	Clock, rising edge triggered
E	3	I	Parallel input E
F	4	I	Parallel input F
G	5	I	Parallel input G
H	6	I	Parallel input H
$\overline{Q}_H$	7	O	Inverted serial output
GND	8	G	Ground
Q_H	9	O	Serial output
SER	10	I	Serial input
A	11	I	Parallel input A
B	12	I	Parallel input B
C	13	I	Parallel input C
D	14	I	Parallel input D
CLK INH	15	I	Clock inhibit input
V_{CC}	16	P	Positive supply
Thermal Pad[2]		—	The thermal pad can be connect to GND or left floating. Do not connect to any other signal or supply.

(1) Signal Types: I = Input, O = Output, I/O = Input or Output, P = Power, G = Ground.
(2) Only applies to the BQB package

5 Specifications

5.1 Absolute Maximum Ratings

over operating free-air temperature range (unless otherwise noted)[1]

			MIN	MAX	UNIT
V_{CC}	Supply voltage range		-0.5	6.5	V
V_I	Input voltage range[2]		-0.5	6.5	V
V_O	Output voltage range[2]		-0.5	V_{CC} + 0.5	V
I_{IK}	Input clamp current	V_I < 0 V		-50	mA
I_{OK}	Output clamp current	V_O < 0 V		-50	mA
I_O	Continuous output current			±50	mA
I_O	Continuous output current through V_{CC} or GND			±100	mA
T_J	Junction temperature		-65	150	°C
T_{stg}	Storage temperature		-65	150	°C
P_{tot}	Power dissipation[3] [4]			500	mW

(1) Operation outside the *Absolute Maximum Ratings* may cause permanent device damage. Absolute maximum ratings do not imply functional operation of the device at these or any other conditions beyond those listed under *Recommended Operating Conditions*. If briefly operating outside the *Recommended Operating Conditions* but within the *Absolute Maximum Ratings*, the device may not sustain damage, but it may not be fully functional. Operating the device in this manner may affect device reliability, functionality, performance, and shorten the device lifetime.
(2) The input and output voltage ratings may be exceeded if the input and output current ratings are observed.
(3) For the PW package: above 79°C, the value of P_{tot} derates linearly with 7.1mW/°C.
(4) For the DYY package: above 52°C, the value of P_{tot} derates linearly with 5.1mW/°C.

5.2 ESD Ratings

			VALUE	UNIT
$V_{(ESD)}$	Electrostatic discharge	Human body model (HBM), per AEC Q100-002 HBM ESD Classification Level 2[1]	±2000	V
		Charged device model (CDM), per AEC Q100-011 CDM ESD Classification Level C4B	±1000	

(1) AEC Q100-002 indicate that HBM stressing shall be in accordance with the ANSI/ESDA/JEDEC JS-001 specification.

5.3 Recommended Operating Conditions

over operating free-air temperature range (unless otherwise noted)

			MIN	MAX	UNIT
V_{CC}	Supply voltage	Operating	1.1	3.6	V
V_I	Input voltage		0	5.5	V
V_O	Output voltage	(High or low state)	0	V_{CC}	V
I_{OH}	High-level output current	V_{CC} = 1.8 V		-4	mA
		V_{CC} = 2.3 V		-8	
		V_{CC} = 2.7 V		-12	
		V_{CC} = 3 V		-24	
I_{OL}	Low-level output current	V_{CC} = 1.8 V		4	mA
		V_{CC} = 2.3 V		8	
		V_{CC} = 2.7 V		12	
		V_{CC} = 3 V		24	
Δt/Δv	Input transition rise or fall rate			10	ns/V
T_A	Operating free-air temperature		-40	125	°C

Copyright © 2024 Texas Instruments Incorporated

5.4 Thermal Information

PACKAGE	PINS	THERMAL METRIC[1]						UNIT
		$R_{\theta JA}$	$R_{\theta JC(top)}$	$R_{\theta JB}$	Ψ_{JT}	Ψ_{JB}	$R_{\theta JC(bot)}$	
PW (TSSOP)	16	141.8	74	87.1	22.3	86.6	-	°C/W
DYY (SOT-23-THN)	16	196.3	117.4	122.9	22.3	122.7	-	°C/W

(1) For more information about traditional and new thermal metrics, see the Semiconductor and IC Package Thermal Metrics application note.

5.5 Electrical Characteristics

over operating free-air temperature range (unless otherwise noted)

PARAMETER	TEST CONDITIONS	V_{CC}	-40°C to 125°C			UNIT
			MIN	TYP	MAX	
V_{OH}	I_{OH}= –100µA	1.1V to 3.6V	V_{CC} - 0.2	V_{CC} - 0.01		V
V_{OH}	I_{OH}= –4mA	1.65V	1.2			V
V_{OH}	I_{OH}= –8mA	2.3V	1.75			V
V_{OH}	I_{OH}= –12mA	2.7V	2.2			V
V_{OH}	I_{OH}= –12mA	3V	2.4			V
V_{OH}	I_{OH}= –24mA	3V	2.2			V
V_{OL}	I_{OL} = 100µA	1.1V to 3.6V		0.01	0.2	V
V_{OL}	I_{OL} = 4mA	1.2V			0.45	V
V_{OL}	I_{OL} = 8mA	1.5V			0.7	V
V_{OL}	I_{OL} = 12mA	1.65V			0.4	V
V_{OL}	I_{OL} = 24mA	3.6V			0.55	V
I_I	V_I = V_{CC} or GND	3.6V			±5	µA
I_{off}	V_I or V_O = V_{CC}	0V			±10	µA
I_{CC}	V_I = V_{CC} or GND, I_O = 0	3.6V			40	µA
ΔI_{CC}	One input at V_{CC} - 0.6V, other inputs at V_{CC} or GND	2.7V to 3.6V			5000	µA
C_I	V_I = V_{CC} or GND	3.3V		4.9		pF
C_O	V_O = V_{CC} or GND	3.3V		6.3		pF
C_{PD}	f = 10MHz	1.8V		12		pF
		2.5V		15		pF
		3.3V		17		pF

5.6 Timing Characteristics

over recommended operating free-air temperature range (unless otherwise noted)

PARAMETER	DESCRIPTION	CONDITION	V_{CC}	-40°C to 125°C		UNIT
				MIN	MAX	
f_{clock}	Clock frequency		1.2V ± 0.1V		59	MHz
			1.5V ± 0.15V		64	
			1.8V ± 0.15V		64	
			2.5V ± 0.2V		100	
			3.3V ± 0.3V		104	
t_W	Pulse duration	SH/$\overline{LD}$ low	1.2V ± 0.1V	6.9		ns
t_W	Pulse duration	CLK high or low	1.2V ± 0.1V	7		ns
t_{SU}	Setup time	SH/$\overline{LD}$ high before CLK↑	1.2V ± 0.1V	16.5		ns

Copyright © 2024 Texas Instruments Incorporated

5.6 Timing Characteristics (continued)

over recommended operating free-air temperature range (unless otherwise noted)

PARAMETER	DESCRIPTION	CONDITION	V_{CC}	-40°C to 125°C		UNIT
				MIN	MAX	
t_{SU}	Setup time	SER before CLK↑	1.2V ± 0.1V	10.1		ns
t_{SU}	Setup time	CLK INH low before CLK↑	1.2V ± 0.1V	1		ns
t_{SU}	Setup time	CLK INH high before CLK↑	1.2V ± 0.1V	1		ns
t_{SU}	Setup time	Data before SH/$\overline{LD}$↓	1.2V ± 0.1V	10		ns
t_{SU}	Setup time	Data before CLK↑	1.2V ± 0.1V	10		ns
t_H	Hold time	SER data after CLK↑	1.2V ± 0.1V	0.4		ns
t_H	Hold time	PAR data after SH/$\overline{LD}$↓	1.2V ± 0.1V	1.8		ns
t_H	Hold time	SH/$\overline{LD}$ high after CLK↑	1.2V ± 0.1V	0		ns
t_H	Hold time	CLK INH high after CLK↑	1.2V ± 0.1V	0.4		ns
t_H	Hold time	Data after CLK↑	1.2V ± 0.1V	1		ns
t_W	Pulse duration	SH/$\overline{LD}$ low	1.5V ± 0.15V	6.9		ns
t_W	Pulse duration	CLK high or low	1.5V ± 0.15V	7		ns
t_{SU}	Setup time	SH/$\overline{LD}$ high before CLK↑	1.5V ± 0.15V	10		ns
t_{SU}	Setup time	SER before CLK↑	1.5V ± 0.15V	10.1		ns
t_{SU}	Setup time	CLK INH low before CLK↑	1.5V ± 0.15V	1		ns
t_{SU}	Setup time	CLK INH high before CLK↑	1.5V ± 0.15V	1		ns
t_{SU}	Setup time	Data before SH/$\overline{LD}$↓	1.5V ± 0.15V	10		ns
t_{SU}	Setup time	Data before CLK↑	1.5V ± 0.15V	10		ns
t_H	Hold time	SER data after CLK↑	1.5V ± 0.15V	1.2		ns
t_H	Hold time	PAR data after SH/$\overline{LD}$↓	1.5V ± 0.15V	1.9		ns
t_H	Hold time	SH/$\overline{LD}$ high after CLK↑	1.5V ± 0.15V	1		ns
t_H	Hold time	CLK INH high after CLK↑	1.5V ± 0.15V	0.6		ns
t_H	Hold time	Data after CLK↑	1.5V ± 0.15V	0.5		ns
t_W	Pulse duration	SH/$\overline{LD}$ low	1.8V ± 0.15V	6.9		ns
t_W	Pulse duration	CLK high or low	1.8V ± 0.15V	7		ns
t_{SU}	Setup time	SH/$\overline{LD}$ high before CLK↑	1.8V ± 0.15V	8		ns
t_{SU}	Setup time	SER before CLK↑	1.8V ± 0.15V	10.1		ns
t_{SU}	Setup time	CLK INH low before CLK↑	1.8V ± 0.15V	1		ns
t_{SU}	Setup time	CLK INH high before CLK↑	1.8V ± 0.15V	1		ns
t_{SU}	Setup time	Data before SH/$\overline{LD}$↓	1.8V ± 0.15V	10		ns
t_{SU}	Setup time	Data before CLK↑	1.8V ± 0.15V	8		ns
t_H	Hold time	SER data after CLK↑	1.8V ± 0.15V	0.2		ns
t_H	Hold time	PAR data after SH/$\overline{LD}$↓	1.8V ± 0.15V	0.8		ns
t_H	Hold time	SH/$\overline{LD}$ high after CLK↑	1.8V ± 0.15V	0		ns
t_H	Hold time	CLK INH high after CLK↑	1.8V ± 0.15V	0.3		ns
t_H	Hold time	Data after CLK↑	1.8V ± 0.15V	1		ns
t_W	Pulse duration	SH/$\overline{LD}$ low	2.5V ± 0.2V	5.4		ns
t_W	Pulse duration	CLK high or low	2.5V ± 0.2V	4.5		ns
t_{SU}	Setup time	SH/$\overline{LD}$ high before CLK↑	2.5V ± 0.2V	4.5		ns
t_{SU}	Setup time	SER before CLK↑	2.5V ± 0.2V	5.9		ns
t_{SU}	Setup time	CLK INH low before CLK↑	2.5V ± 0.2V	1		ns
t_{SU}	Setup time	CLK INH high before CLK↑	2.5V ± 0.2V	1		ns

Copyright © 2024 Texas Instruments Incorporated

5.6 Timing Characteristics (continued)

over recommended operating free-air temperature range (unless otherwise noted)

PARAMETER	DESCRIPTION	CONDITION	V_{CC}	-40°C to 125°C		UNIT
				MIN	MAX	
t_{SU}	Setup time	Data before SH/$\overline{LD}$↓	2.5V ± 0.2V	6.9		ns
t_{SU}	Setup time	Data before CLK↑	2.5V ± 0.2V	4.5		ns
t_H	Hold time	SER data after CLK↑	2.5V ± 0.2V	0.5		ns
t_H	Hold time	PAR data after SH/$\overline{LD}$↓	2.5V ± 0.2V	0		ns
t_H	Hold time	SH/$\overline{LD}$ high after CLK↑	2.5V ± 0.2V	0.1		ns
t_H	Hold time	CLK INH high after CLK↑	2.5V ± 0.2V	0.3		ns
t_H	Hold time	Data after CLK↑	2.5V ± 0.2V	1.5		ns
t_W	Pulse duration	SH/$\overline{LD}$ low	3.3V ± 0.3V	4.3		ns
t_W	Pulse duration	CLK high or low	3.3V ± 0.3V	4.3		ns
t_{SU}	Setup time	SH/$\overline{LD}$ high before CLK↑	3.3V ± 0.3V	3.5		ns
t_{SU}	Setup time	SER before CLK↑	3.3V ± 0.3V	4		ns
t_{SU}	Setup time	CLK INH low before CLK↑	3.3V ± 0.3V	1		ns
t_{SU}	Setup time	CLK INH high before CLK↑	3.3V ± 0.3V	1		ns
t_{SU}	Setup time	Data before SH/$\overline{LD}$↓	3.3V ± 0.3V	5.3		ns
t_{SU}	Setup time	Data before CLK↑	3.3V ± 0.3V	2.9		ns
t_H	Hold time	SER data after CLK↑	3.3V ± 0.3V	0.5		ns
t_H	Hold time	PAR data after SH/$\overline{LD}$↓	3.3V ± 0.3V	0		ns
t_H	Hold time	SH/$\overline{LD}$ high after CLK↑	3.3V ± 0.3V	0.2		ns
t_H	Hold time	CLK INH high after CLK↑	3.3V ± 0.3V	0.5		ns
t_H	Hold time	Data after CLK↑	3.3V ± 0.3V	1.5		ns

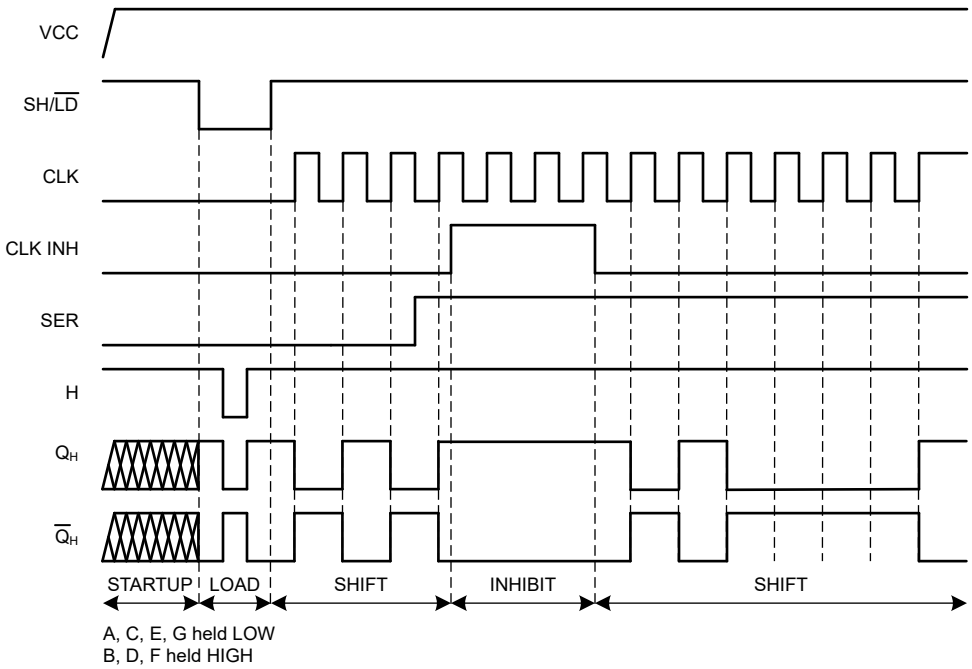

Figure 5-1. Timing Diagram

5.7 Switching Characteristics

over operating free-air temperature range(unless otherwise noted). See *Parameter Measurement Information*

PARAMETER	FROM (INPUT)	TO (OUTPUT)	LOAD CAPACITANCE	V_{CC}	-40°C to 125°C			UNIT
					MIN	TYP	MAX	
t_{pd}	CLK or CLK INH	Q_H or $\overline{Q}_H$	C_L = 15pF	1.2V ± 0.1V	1	15.4	27.6	ns
	H	Q_H or $\overline{Q}_H$	C_L = 15pF	1.2V ± 0.1V	1	17	36.3	ns
	SH/$\overline{LD}$	Q_H or $\overline{Q}_H$	C_L = 15pF	1.2V ± 0.1V	1	21.2	40.2	ns
	CLK or CLK INH	Q_H or $\overline{Q}_H$	C_L = 30pF	1.2V ± 0.1V	1	16.3	27.6	ns
	H	Q_H or $\overline{Q}_H$	C_L = 30pF	1.2V ± 0.1V	1	17.7	36.3	ns
	SH/$\overline{LD}$	Q_H or $\overline{Q}_H$	C_L = 30pF	1.2V ± 0.1V	1	22.2	40.2	ns
	CLK or CLK INH	Q_H or $\overline{Q}_H$	C_L = 50pF	1.2V ± 0.1V	1	17.5	32.8	ns
	H	Q_H or $\overline{Q}_H$	C_L = 50pF	1.2V ± 0.1V	1	18.8	38.5	ns
	SH/$\overline{LD}$	Q_H or $\overline{Q}_H$	C_L = 50pF	1.2V ± 0.1V	1	23.5	45.4	ns
	CLK or CLK INH	Q_H or $\overline{Q}_H$	C_L = 15pF	1.5V ± 0.15V	1	8.6	27.6	ns
	H	Q_H or $\overline{Q}_H$	C_L = 15pF	1.5V ± 0.15V	1	9.7	36.3	ns
	SH/$\overline{LD}$	Q_H or $\overline{Q}_H$	C_L = 15pF	1.5V ± 0.15V	1	11.7	40.2	ns
	CLK or CLK INH	Q_H or $\overline{Q}_H$	C_L = 30pF	1.5V ± 0.15V	1	9.2	27.6	ns
	H	Q_H or $\overline{Q}_H$	C_L = 30pF	1.5V ± 0.15V	1	10.2	36.3	ns
	SH/$\overline{LD}$	Q_H or $\overline{Q}_H$	C_L = 30pF	1.5V ± 0.15V	1	12.3	40.2	ns
	CLK or CLK INH	Q_H or $\overline{Q}_H$	C_L = 50pF	1.5V ± 0.15V	1	9.9	32.8	ns
	H	Q_H or $\overline{Q}_H$	C_L = 50pF	1.5V ± 0.15V	1	10.9	41.5	ns
	SH/$\overline{LD}$	Q_H or $\overline{Q}_H$	C_L = 50pF	1.5V ± 0.15V	1	13	45.4	ns
	CLK or CLK INH	Q_H or $\overline{Q}_H$	C_L = 15pF	1.8V ± 0.15V	1	6.7	27.6	ns
	H	Q_H or $\overline{Q}_H$	C_L = 15pF	1.8V ± 0.15V	1	7.6	36.3	ns
	SH/$\overline{LD}$	Q_H or $\overline{Q}_H$	C_L = 15pF	1.8V ± 0.15V	1	9.2	40.2	ns
	CLK or CLK INH	Q_H or $\overline{Q}_H$	C_L = 30pF	1.8V ± 0.15V	1	6.8	27.6	ns
	H	Q_H or $\overline{Q}_H$	C_L = 30pF	1.8V ± 0.15V	1	7.6	36.3	ns
	SH/$\overline{LD}$	Q_H or $\overline{Q}_H$	C_L = 30pF	1.8V ± 0.15V	1	9	40.2	ns
	CLK or CLK INH	Q_H or $\overline{Q}_H$	C_L = 50pF	1.8V ± 0.15V	1	8	32.8	ns
	H	Q_H or $\overline{Q}_H$	C_L = 50pF	1.8V ± 0.15V	1	8.8	41.5	ns
	SH/$\overline{LD}$	Q_H or $\overline{Q}_H$	C_L = 50pF	1.8V ± 0.15V	1	10.4	45.4	ns
	CLK or CLK INH	Q_H or $\overline{Q}_H$	C_L = 15pF	2.5V ± 0.2V	1	4.5	16	ns
	H	Q_H or $\overline{Q}_H$	C_L = 15pF	2.5V ± 0.2V	1	5.1	21	ns
	SH/$\overline{LD}$	Q_H or $\overline{Q}_H$	C_L = 15pF	2.5V ± 0.2V	1	6.1	23.8	ns
	CLK or CLK INH	Q_H or $\overline{Q}_H$	C_L = 30pF	2.5V ± 0.2V	1	4.5	16	ns
	H	Q_H or $\overline{Q}_H$	C_L = 30pF	2.5V ± 0.2V	1	5	21	ns
	SH/$\overline{LD}$	Q_H or $\overline{Q}_H$	C_L = 30pF	2.5V ± 0.2V	1	5.9	23.8	ns
	CLK or CLK INH	Q_H or $\overline{Q}_H$	C_L = 50pF	2.5V ± 0.2V	1	5.5	20	ns
	H	Q_H or $\overline{Q}_H$	C_L = 50pF	2.5V ± 0.2V	1	6.1	25	ns
	SH/$\overline{LD}$	Q_H or $\overline{Q}_H$	C_L = 50pF	2.5V ± 0.2V	1	7.1	27.7	ns
	CLK or CLK INH	Q_H or $\overline{Q}_H$	C_L = 15pF	3.3V ± 0.3V	1	3.6	11.2	ns
	H	Q_H or $\overline{Q}_H$	C_L = 15pF	3.3V ± 0.3V	1	4.1	14.5	ns

Copyright © 2024 Texas Instruments Incorporated

5.7 Switching Characteristics (continued)

over operating free-air temperature range(unless otherwise noted). See *Parameter Measurement Information*

PARAMETER	FROM (INPUT)	TO (OUTPUT)	LOAD CAPACITANCE	V_{CC}	-40°C to 125°C			UNIT
					MIN	TYP	MAX	
t_{pd}	SH/$\overline{LD}$	Q_H or $\overline{Q}_H$	C_L = 15pF	3.3V ± 0.3V	1	4.8	16.6	ns
	CLK or CLK INH	Q_H or $\overline{Q}_H$	C_L = 30pF	3.3V ± 0.3V	1	3.9	11.2	ns
	H	Q_H or $\overline{Q}_H$	C_L = 30pF	3.3V ± 0.3V	1	4.4	14.5	ns
	SH/$\overline{LD}$	Q_H or $\overline{Q}_H$	C_L = 30pF	3.3V ± 0.3V	1	5.1	16.6	ns
	CLK or CLK INH	Q_H or $\overline{Q}_H$	C_L = 50pF	3.3V ± 0.3V	1	4.2	14.5	ns
	H	Q_H or $\overline{Q}_H$	C_L = 50pF	3.3V ± 0.3V	1	4.6	17.8	ns
	SH/$\overline{LD}$	Q_H or $\overline{Q}_H$	C_L = 50pF	3.3V ± 0.3V	1	5.3	19.9	ns

5.8 Noise Characteristics

VCC = 3.3 V, CL = 50 pF, TA = 25°C

PARAMETER	DESCRIPTION	MIN	TYP	MAX	UNIT
$V_{OL(P)}$	Quiet output, maximum dynamic V_{OL}			0.8	V
$V_{OL(V)}$	Quiet output, minimum dynamic V_{OL}	-0.8	-0.3		V
$V_{OH(V)}$	Quiet output, minimum dynamic V_{OH}	2.2	3.3		V
$V_{IH(D)}$	High-level dynamic input voltage	2.0			V
$V_{IL(D)}$	Low-level dynamic input voltage			0.8	V

5.9 Typical Characteristics

T_A = 25°C (unless otherwise noted)

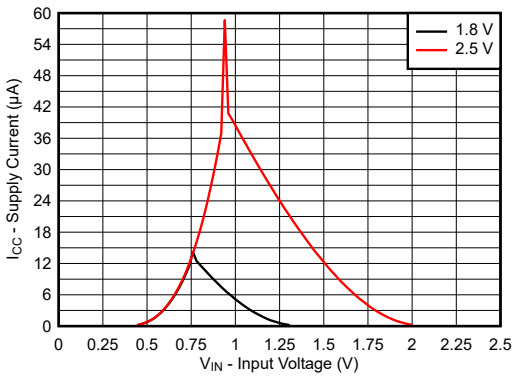

Figure 5-2. Supply Current Across Input Voltage 1.8V and 2.5V Supply

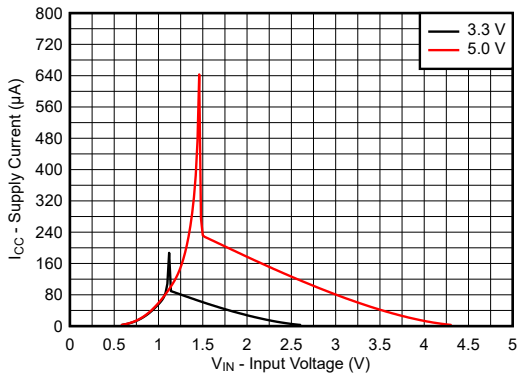

Figure 5-3. Supply Current Across Input Voltage 3.3V and 5.0V Supply

5.9 Typical Characteristics (continued)

T_A = 25°C (unless otherwise noted)

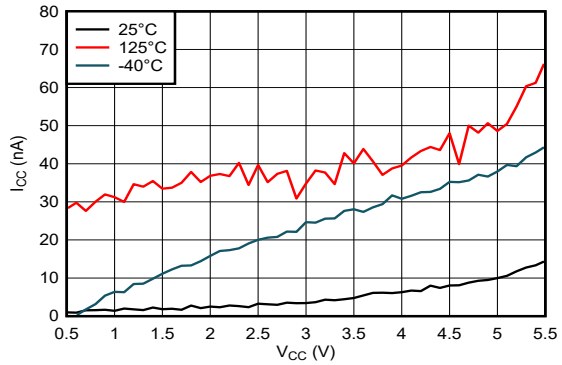

Figure 5-4. Supply Current Across Supply Voltage

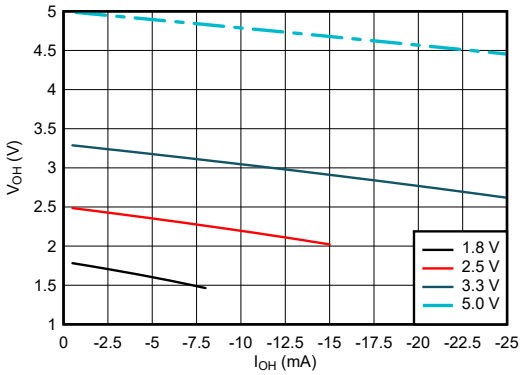

Figure 5-5. Output Voltage vs Current in HIGH State

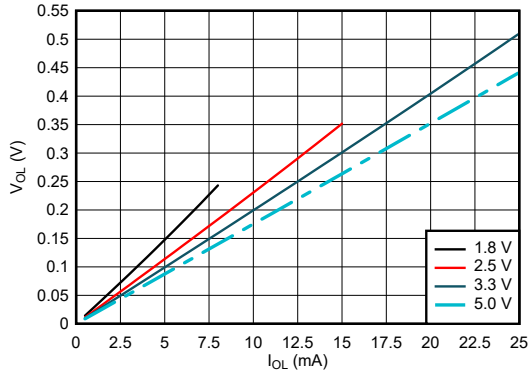

Figure 5-6. Output Voltage vs Current in LOW State

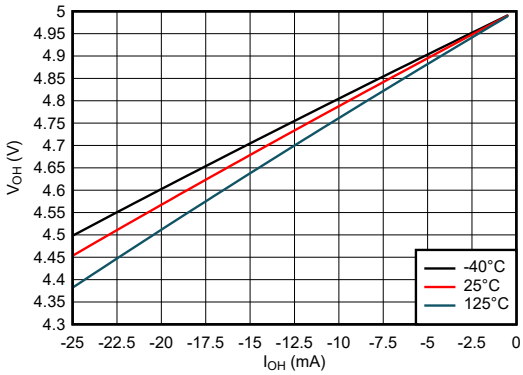

Figure 5-7. Output Voltage vs Current in HIGH State; 5V Supply

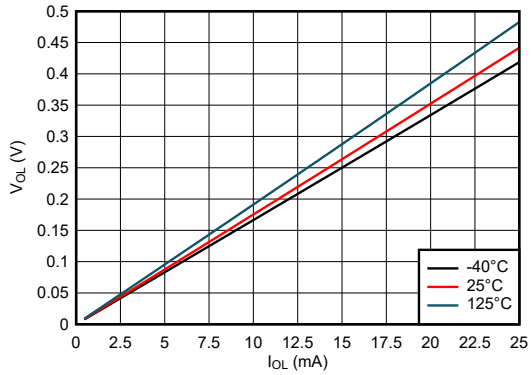

Figure 5-8. Output Voltage vs Current in LOW State; 5V Supply

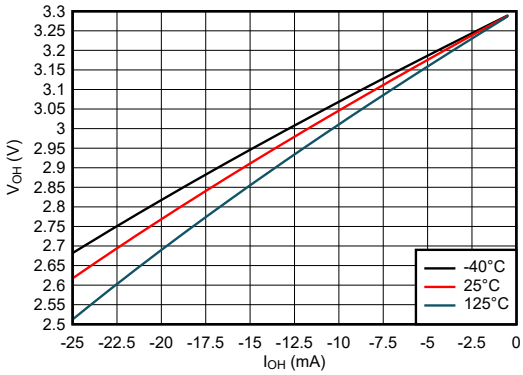

Figure 5-9. Output Voltage vs Current in HIGH State; 3.3V Supply

Copyright © 2024 Texas Instruments Incorporated

5.9 Typical Characteristics (continued)

T_A = 25°C (unless otherwise noted)

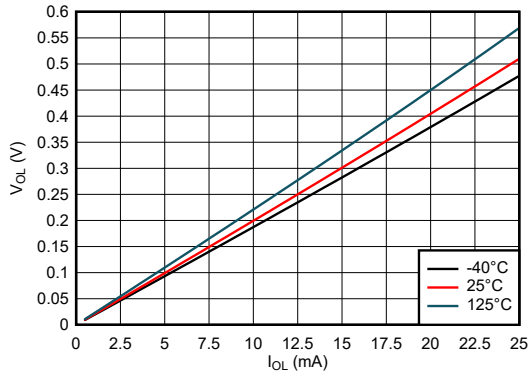

Figure 5-10. Output Voltage vs Current in LOW State; 3.3V Supply

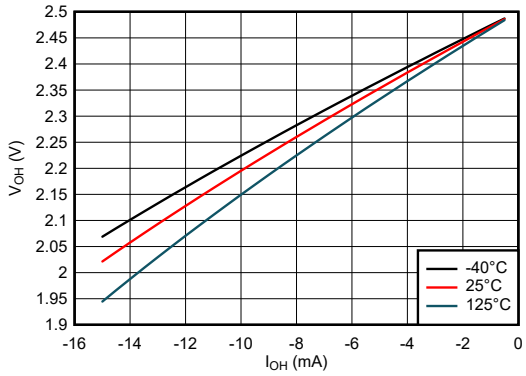

Figure 5-11. Output Voltage vs Current in HIGH State; 2.5V Supply

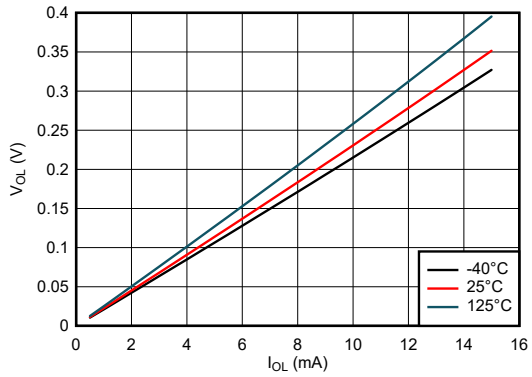

Figure 5-12. Output Voltage vs Current in LOW State; 2.5V Supply

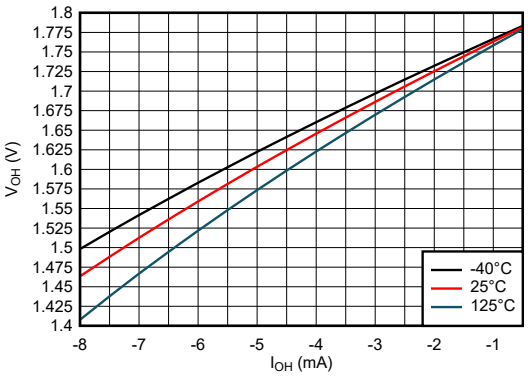

Figure 5-13. Output Voltage vs Current in HIGH State; 1.8V Supply

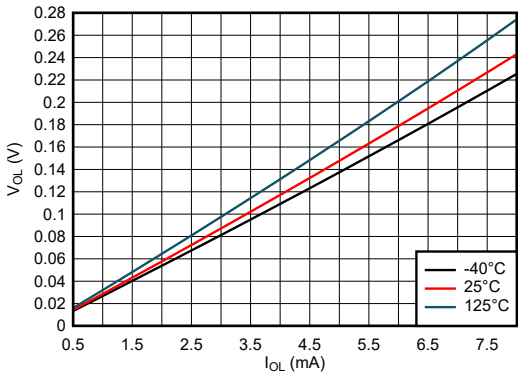

Figure 5-14. Output Voltage vs Current in LOW State; 1.8V Supply

6 Parameter Measurement Information

Phase relationships between waveforms were chosen arbitrarily for the examples listed in the following table. All input pulses are supplied by generators having the following characteristics: PRR ≤ 1MHz, Z_O = 50Ω, t_t ≤ 2.5ns.

For clock inputs, f_{max} is measured when the input duty cycle is 50%.

The outputs are measured individually with one input transition per measurement.

V_{CC}	V_t	R_L	C_L	ΔV
1.2V ± 0.1V	V_{CC}/2	2kΩ	15pF	0.1V
1.5V ± 0.12V	V_{CC}/2	2kΩ	15pF	0.1V
1.8V ± 0.15V	V_{CC}/2	1kΩ	30pF	0.15V
2.5V ± 0.2V	V_{CC}/2	500Ω	30pF	0.15V
2.7V	1.5V	500Ω	50pF	0.3V
3.3V ± 0.3V	1.5V	500Ω	50pF	0.3V

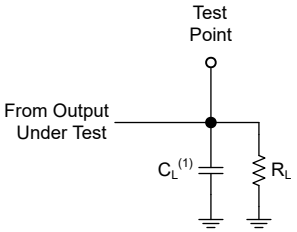

(1) C_L includes probe and test-fixture capacitance.

Figure 6-1. Load Circuit for Push-Pull Outputs

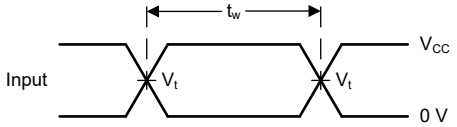

Figure 6-2. Voltage Waveforms, Pulse Duration

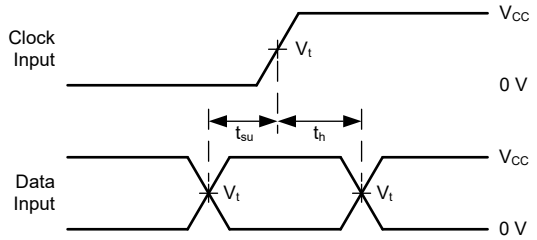

Figure 6-3. Voltage Waveforms, Setup and Hold Times

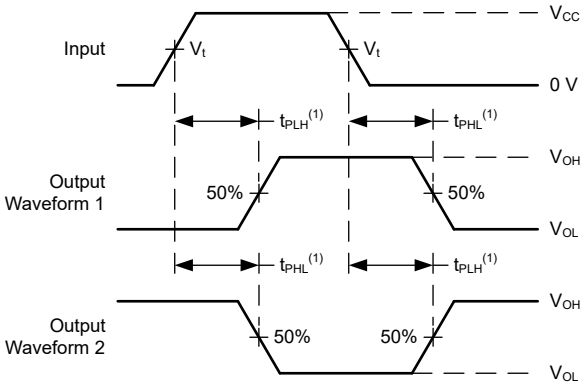

(1) The greater between t_{PLH} and t_{PHL} is the same as t_{pd}.

Figure 6-4. Voltage Waveforms Propagation Delays

Copyright © 2024 Texas Instruments Incorporated

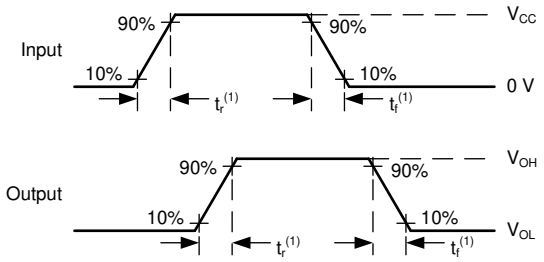

(1) The greater between t_r and t_f is the same as t_t.

Figure 6-5. Voltage Waveforms, Input and Output Transition Times

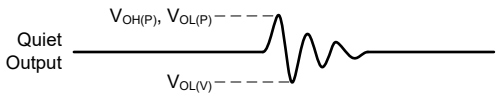

Noise values measured with all other outputs simultaneously switching.

Figure 6-6. Voltage Waveforms, Noise

7 Detailed Description

7.1 Overview

The SN74LVC165A-Q1 device is an 8-bit parallel-load shift register that, when clocked, shifts the data toward a serial (Q_H) output. Parallel-in access to each stage is provided by eight individual direct data (A−H) inputs that are enabled by a low level at the shift/load (SH/$\overline{LD}$) input. The SN74LVC165A-Q1 device also features a clock-inhibit (CLK INH) function and a complementary serial ($\overline{Q}_H$) output.

Clocking is accomplished by a low-to-high transition of the clock (CLK) input while SH/$\overline{LD}$ is held high and CLK INH is held low. The functions of CLK and CLK INH are interchangeable. Because a low CLK and a low-to-high transition of CLK INH also accomplishes clocking, CLK INH must be changed to the high level only while CLK is high. Parallel loading is inhibited when SH/$\overline{LD}$ is held high. While SH/$\overline{LD}$ is low, the parallel inputs to the register are enabled independently of the levels of the CLK, CLK INH, or SER inputs.

The SN74LVC165A-Q1 includes Schmitt-trigger architecture on all inputs to improve noise immunity and allow for slow transitioning input signals.

7.2 Functional Block Diagram

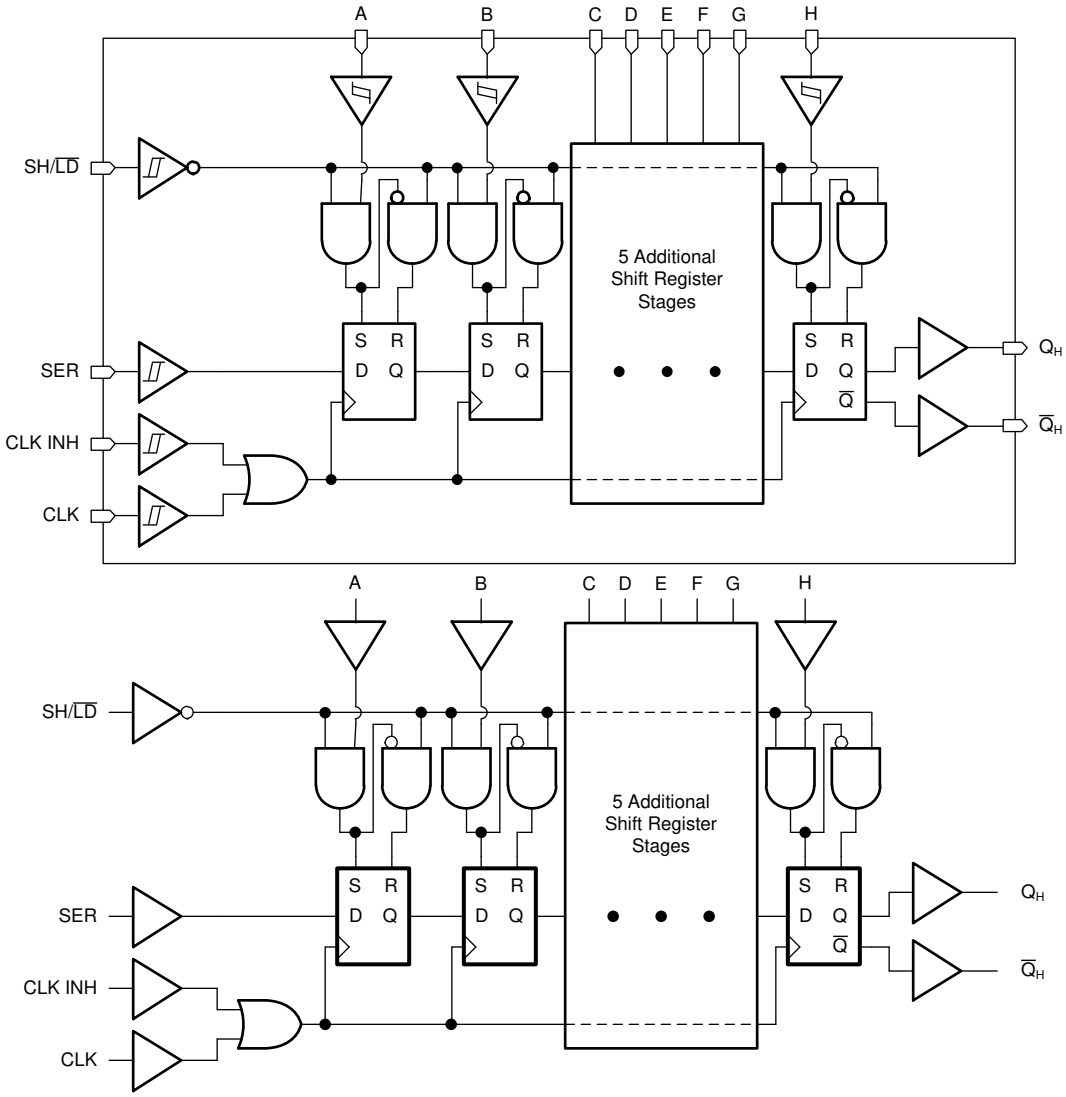

Figure 7-1. Logic Diagram (Positive Logic) for SN74LVC165A-Q1

Copyright © 2024 Texas Instruments Incorporated

7.3 Feature Description

7.3.1 Balanced CMOS Push-Pull Outputs

This device includes balanced CMOS push-pull outputs. The term *balanced* indicates that the device can sink and source similar currents. The drive capability of this device may create fast edges into light loads, so routing and load conditions should be considered to prevent ringing. Additionally, the outputs of this device are capable of driving larger currents than the device can sustain without being damaged. It is important to limit the output power of the device to avoid damage due to overcurrent. The electrical and thermal limits defined in the *Absolute Maximum Ratings* must be followed at all times.

Unused push-pull CMOS outputs must be left disconnected.

7.3.2 CMOS Schmitt-Trigger Inputs

This device includes inputs with the Schmitt-trigger architecture. These inputs are high impedance and are typically modeled as a resistor in parallel with the input capacitance given in the *Electrical Characteristics* table from the input to ground. The worst case resistance is calculated with the maximum input voltage, given in the *Absolute Maximum Ratings* table, and the maximum input leakage current, given in the *Electrical Characteristics* table, using Ohm's law (R = V ÷ I).

The Schmitt-trigger input architecture provides hysteresis as defined by ΔV_T in the *Electrical Characteristics* table, which makes this device extremely tolerant to slow or noisy inputs. While the inputs can be driven much slower than standard CMOS inputs, it is still recommended to properly terminate unused inputs. Driving the inputs with slow transitioning signals will increase dynamic current consumption of the device. For additional information regarding Schmitt-trigger inputs, please see *Understanding Schmitt Triggers*.

7.3.3 Latching Logic

This device includes latching logic circuitry. Latching circuits commonly include D-type latches and D-type flip-flops, but include all logic circuits that act as volatile memory.

When the device is powered on, the state of each latch is unknown. There is no default state for each latch at start-up.

The output state of each latching logic circuit only remains stable as long as power is applied to the device within the supply voltage range specified in the *Recommended Operating Conditions* table.

7.3.4 Partial Power Down (I_{off})

This device includes circuitry to disable all outputs when the supply pin is held at 0V. When disabled, the outputs will neither source nor sink current, regardless of the input voltages applied. The amount of leakage current at each output is defined by the I_{off} specification in the *Electrical Characteristics* table.

7.3.5 Standard CMOS Inputs

This device includes standard CMOS inputs. Standard CMOS inputs are high impedance and are typically modeled as a resistor in parallel with the input capacitance given in the *Electrical Characteristics*. The worst case resistance is calculated with the maximum input voltage, given in the *Absolute Maximum Ratings*, and the maximum input leakage current, given in the *Electrical Characteristics*, using Ohm's law (R = V ÷ I).

Standard CMOS inputs require that input signals transition between valid logic states quickly, as defined by the input transition time or rate in the *Recommended Operating Conditions* table. Failing to meet this specification will result in excessive power consumption and could cause oscillations. More details can be found in *Implications of Slow or Floating CMOS Inputs*.

Do not leave standard CMOS inputs floating at any time during operation. Unused inputs must be terminated at V_{CC} or GND. If a system will not be actively driving an input at all times, then a pull-up or pull-down resistor can be added to provide a valid input voltage during these times. The resistor value will depend on multiple factors; a 10kΩ resistor, however, is recommended and will typically meet all requirements.

7.3.6 Wettable Flanks

This device includes wettable flanks for at least one package. See the *Features* section on the front page of the data sheet where packages include this feature.

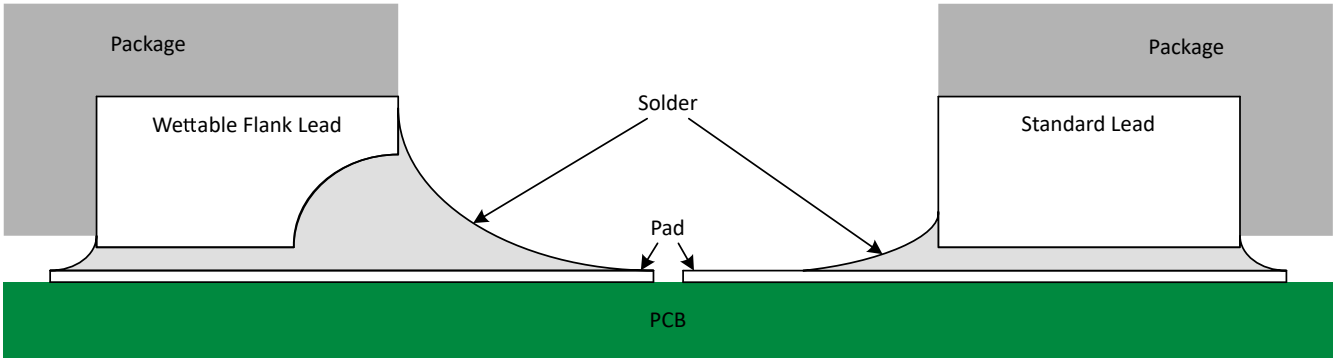

Figure 7-2. Simplified Cutaway View of Wettable-Flank QFN Package and Standard QFN Package After Soldering

Wettable flanks help improve side wetting after soldering, which makes QFN packages easier to inspect with automatic optical inspection (AOI). As shown in Figure 7-2, a wettable flank can be dimpled or step-cut to provide additional surface area for solder adhesion which assists in reliably creating a side fillet. See the mechanical drawing for additional details.

7.3.7 Clamp Diode Structure

As Figure 7-3 shows, the outputs to this device have both positive and negative clamping diodes, and the inputs to this device have negative clamping diodes only.

CAUTION

Voltages beyond the values specified in the *Absolute Maximum Ratings* table can cause damage to the device. The input and output voltage ratings may be exceeded if the input and output clamp-current ratings are observed.

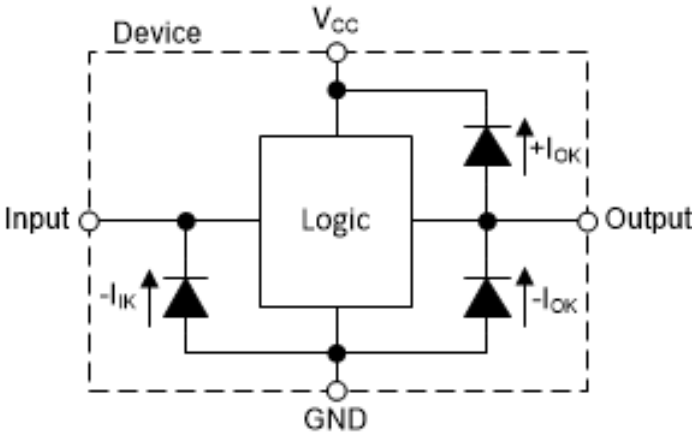

Figure 7-3. Electrical Placement of Clamping Diodes for Each Input and Output

Copyright © 2024 Texas Instruments Incorporated

7.4 Device Functional Modes

Table 7-1 and Table 7-2 list the functional modes of the SN74LVC165A-Q1.

Table 7-1. Operating Mode Table

INPUTS[1]			FUNCTION
SH/$\overline{LD}$	CLK	CLK INH	
L	X	X	Parallel load[2]
H	H	X	No change
H	X	H	No change
H	L	↑	Shift[3]
H	↑	L	Shift[3]

(1) H = High Voltage Level, L = Low Voltage Level, X = Don't Care, ↑ = Low to High transition
(2) Parallel load : Values at inputs A through H are loaded to respective internal registers.
(3) Shift : Content of each internal register shifts towards serial output Q_H. Data at SER is shifted into the first register.

Table 7-2. Output Function Table

INTERNAL REGISTERS[1] [2]		OUTPUTS[3]	
A — G	H	Q	$\overline{Q}$
X	L	L	H
X	H	H	L

(1) Internal registers refer to the shift registers inside the device. These values are set by either loading data from the parallel inputs, or by clocking data in from the serial input.
(2) H = High voltage level, L = Low voltage level, X = Don't care
(3) H = Driving high, L = Driving low

Copyright © 2024 Texas Instruments Incorporated

8 Application and Implementation

Note

Information in the following applications sections is not part of the TI component specification, and TI does not warrant its accuracy or completeness. TI's customers are responsible for determining suitability of components for their purposes, as well as validating and testing their design implementation to confirm system functionality.

8.1 Application Information

The SN74LVC165A-Q1 is a parallel-input shift register, which can significantly reduce the number of required inputs on a system controller in some applications. Parallel data is loaded into the shift register, then the stored data can be loaded into a serial input of the system controller by clocking the shift register.

Multiple shift registers can be cascaded to provide more data inputs while still only using a single serial input to the system controller. This process is primarily limited by the required data input rate and timing characteristics of the selected shift register, as defined in the *Timing Characteristics* and *Switching Characteristics* tables.

An example block diagram is shown for using a single shift register in the *Typical Application Block Diagram*.

8.2 Typical Application

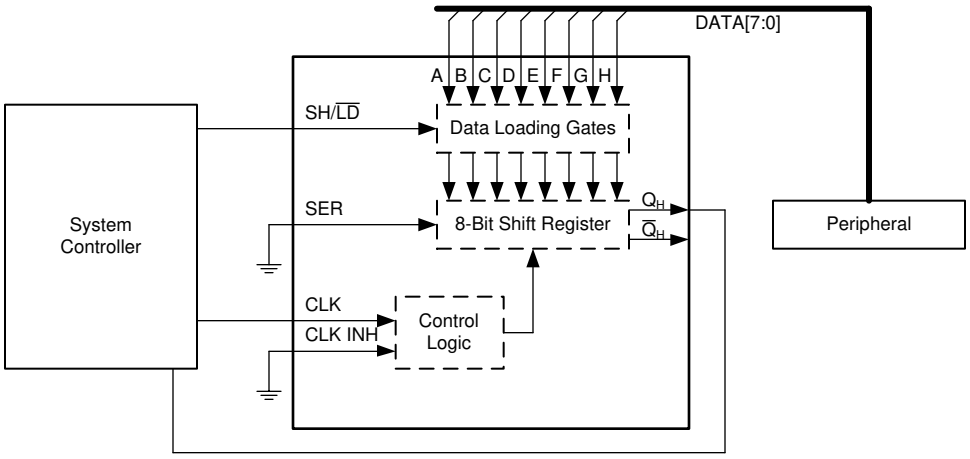

Figure 8-1. Typical Application Block Diagram

8.2.1 Design Requirements

8.2.1.1 Power Considerations

Ensure the desired supply voltage is within the range specified in the *Recommended Operating Conditions*. The supply voltage sets the device's electrical characteristics of the device as described in the *Electrical Characteristics* section.

The positive voltage supply must be capable of sourcing current equal to the total current to be sourced by all outputs of the SN74LVC165A-Q1 plus the maximum static supply current, I_{CC}, listed in the *Electrical Characteristics*, and any transient current required for switching. The logic device can only source as much current that is provided by the positive supply source. Ensure the maximum total current through V_{CC} listed in the *Absolute Maximum Ratings* is not exceeded.

The ground must be capable of sinking current equal to the total current to be sunk by all outputs of the SN74LVC165A-Q1 plus the maximum supply current, I_{CC}, listed in the *Electrical Characteristics*, and any transient current required for switching. The logic device can only sink as much current that can be sunk into its ground connection. Ensure the maximum total current through GND listed in the *Absolute Maximum Ratings* is not exceeded.

Copyright © 2024 Texas Instruments Incorporated

The SN74LVC165A-Q1 can drive a load with a total capacitance less than or equal to 50pF while still meeting all of the data sheet specifications. Larger capacitive loads can be applied; however, it is not recommended to exceed 50pF.

The SN74LVC165A-Q1 can drive a load with total resistance described by $R_L \geq V_O / I_O$, with the output voltage and current defined in the *Electrical Characteristics* table with V_{OH} and V_{OL}. When outputting in the HIGH state, the output voltage in the equation is defined as the difference between the measured output voltage and the supply voltage at the V_{CC} pin.

Total power consumption can be calculated using the information provided in *CMOS Power Consumption and Cpd Calculation*.

Thermal increase can be calculated using the information provided in *Thermal Characteristics of Standard Linear and Logic (SLL) Packages and Devices*.

CAUTION

The maximum junction temperature, $T_{J(max)}$ listed in the *Absolute Maximum Ratings*, is an additional limitation to prevent damage to the device. Do not violate any values listed in the *Absolute Maximum Ratings*. These limits are provided to prevent damage to the device.

8.2.1.2 Input Considerations

Input signals must cross $V_{IL(max)}$ $V_{t-(min)}$ to be considered a logic LOW, and $V_{IH(min)}$ $V_{t+(max)}$ to be considered a logic HIGH. Do not exceed the maximum input voltage range found in the *Absolute Maximum Ratings*.

Unused inputs must be terminated to either V_{CC} or ground. The unused inputs can be directly terminated if the input is completely unused, or they can be connected with a pull-up or pull-down resistor if the input will be used sometimes, but not always. A pull-up resistor is used for a default state of HIGH, and a pull-down resistor is used for a default state of LOW. The drive current of the controller, leakage current into the SN74LVC165A-Q1 (as specified in the *Electrical Characteristics*), and the desired input transition rate limits the resistor size. A 10kΩ resistor value is often used due to these factors.

The SN74LVC165A-Q1 has CMOS inputs and thus requires fast input transitions to operate correctly, as defined in the *Recommended Operating Conditions* table. Slow input transitions can cause oscillations, additional power consumption, and reduction in device reliability.

The SN74LVC165A-Q1 has no input signal transition rate requirements because it has Schmitt-Trigger inputs.

Another benefit to having Schmitt-Trigger inputs is the ability to reject noise. Noise with a large enough amplitude can still cause issues. To know how much noise is too much, please refer to the $\Delta V_{T(min)}$ in the *Electrical Characteristics*. This hysteresis value will provide the peak-to-peak limit.

Unlike what happens with standard CMOS inputs, Schmitt-Trigger inputs can be held at any valid value without causing huge increases in power consumption. The typical additional current caused by holding an input at a value other than V_{CC} or ground is plotted in the *Typical Characteristics*.

Refer to the *Feature Description* section for additional information regarding the inputs for this device.

8.2.1.3 Output Considerations

The positive supply voltage is used to produce the output HIGH voltage. Drawing current from the output will decrease the output voltage as specified by the V_{OH} specification in the *Electrical Characteristics*. The ground voltage is used to produce the output LOW voltage. Sinking current into the output will increase the output voltage as specified by the V_{OL} specification in the *Electrical Characteristics*.

Push-pull outputs that could be in opposite states, even for a very short time period, should never be connected directly together. This can cause excessive current and damage to the device.

Two channels within the same device with the same input signals can be connected in parallel for additional output drive strength.

Copyright © 2024 Texas Instruments Incorporated

Unused outputs can be left floating. Do not connect outputs directly to V_{CC} or ground.

Refer to the *Feature Description* section for additional information regarding the outputs for this device.

8.2.2 Detailed Design Procedure

1. Add a decoupling capacitor from V_{CC} to GND. The capacitor needs to be placed physically close to the device and electrically close to both the V_{CC} and GND pins. An example layout is shown in the *Layout* section.
2. Ensure the capacitive load at the output is ≤ 50pF. This is not a hard limit; by design, however, it will optimize performance. This can be accomplished by providing short, appropriately sized traces from the SN74LVC165A-Q1 to one or more of the receiving devices.
3. Ensure the resistive load at the output is larger than (V_{CC} / $I_{O(max)}$)Ω. Doing this will prevent the maximum output current from the *Absolute Maximum Ratings* from being violated. Most CMOS inputs have a resistive load measured in MΩ; much larger than the minimum calculated previously.
4. Thermal issues are rarely a concern for logic gates; the power consumption and thermal increase, however, can be calculated using the steps provided in the application report, *CMOS Power Consumption and Cpd Calculation*.

8.2.3 Application Curve

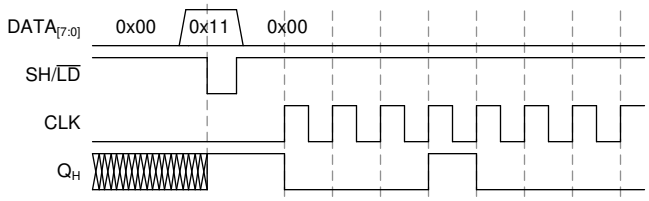

Figure 8-2. Application Timing Diagram

8.3 Power Supply Recommendations

The power supply can be any voltage between the minimum and maximum supply voltage rating listed in the *Recommended Operating Conditions*.

During startup, the power supply should ramp within the provided power-up ramp rate range in the *Recommended Operating Conditions* table.

Each V_{CC} terminal should have a good bypass capacitor to prevent power disturbance. For the SN74LVC165A-Q1, a 0.1µF bypass capacitor is recommended. To reject different frequencies of noise, use multiple bypass capacitors in parallel. Capacitors with values of 0.1µF and 1µF are commonly used in parallel.

8.4 Layout

8.4.1 Layout Guidelines

When using multiple-input and multiple-channel logic devices, inputs must never be left floating. In many cases, functions or parts of functions of digital logic devices are unused; for example, when only two inputs of a triple-input AND gate are used or only 3 of the 4 buffer gates are used. Such unused input pins must not be left unconnected because the undefined voltages at the outside connections result in undefined operational states. All unused inputs of digital logic devices must be connected to a logic high or logic low voltage, as defined by the input voltage specifications, to prevent them from floating. The logic level that must be applied to any particular unused input depends on the function of the device. Generally, the inputs are tied to GND or V_{CC}, whichever makes more sense for the logic function or is more convenient.

Copyright © 2024 Texas Instruments Incorporated

8.4.2 Layout Example

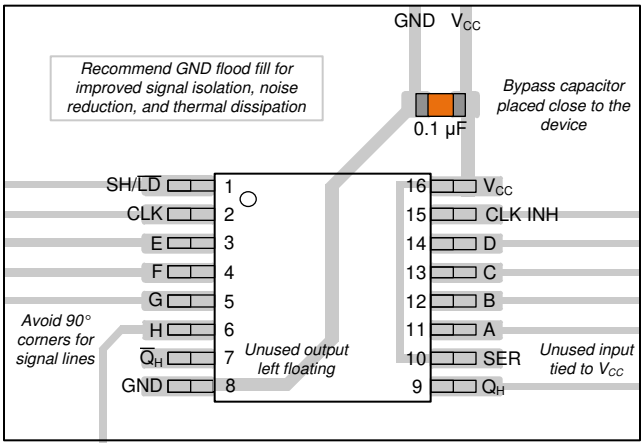

Figure 8-3. Example Layout for the SN74LVC165A-Q1 in the PW Package

9 Device and Documentation Support

TI offers an extensive line of development tools. Tools and software to evaluate the performance of the device, generate code, and develop solutions are listed below.

9.1 Documentation Support

9.1.1 Related Documentation

For related documentation, see the following:

- Texas Instruments, *CMOS Power Consumption and Cpd Calculation* application note
- Texas Instruments, *Designing With Logic* application note
- Texas Instruments, *Thermal Characteristics of Standard Linear and Logic (SLL) Packages and Devices* application note
- Texas Instruments, *Implications of Slow or Floating CMOS Inputs* application note

9.2 Receiving Notification of Documentation Updates

To receive notification of documentation updates, navigate to the device product folder on ti.com. Click on *Notifications* to register and receive a weekly digest of any product information that has changed. For change details, review the revision history included in any revised document.

9.3 Support Resources

TI E2E™ support forums are an engineer's go-to source for fast, verified answers and design help — straight from the experts. Search existing answers or ask your own question to get the quick design help you need.

Linked content is provided "AS IS" by the respective contributors. They do not constitute TI specifications and do not necessarily reflect TI's views; see TI's Terms of Use.

9.4 Trademarks

TI E2E™ is a trademark of Texas Instruments.
All trademarks are the property of their respective owners.

9.5 Electrostatic Discharge Caution

This integrated circuit can be damaged by ESD. Texas Instruments recommends that all integrated circuits be handled with appropriate precautions. Failure to observe proper handling and installation procedures can cause damage.

ESD damage can range from subtle performance degradation to complete device failure. Precision integrated circuits may be more susceptible to damage because very small parametric changes could cause the device not to meet its published specifications.

9.6 Glossary

TI Glossary This glossary lists and explains terms, acronyms, and definitions.

10 Revision History

DATES	REVISION	NOTES
May 2024	*	Initial Release

11 Mechanical, Packaging, and Orderable Information

The following pages include mechanical, packaging, and orderable information. This information is the most current data available for the designated devices. This data is subject to change without notice and revision of this document. For browser-based versions of this data sheet, refer to the left-hand navigation.

Copyright © 2024 Texas Instruments Incorporated

PACKAGING INFORMATION

Orderable part number	Status (1)	Material type (2)	Package | Pins	Package qty | Carrier	RoHS (3)	Lead finish/ Ball material (4)	MSL rating/ Peak reflow (5)	Op temp (°C)	Part marking (6)
SN74LVC165ADRQ1	Active	Production	SOIC (D) | 16	3000 | LARGE T&R	Yes	NIPDAU	Level-1-260C-UNLIM	-40 to 125	LVC165AQ
SN74LVC165ADRQ1.A	Active	Production	SOIC (D) | 16	3000 | LARGE T&R	Yes	NIPDAU	Level-1-260C-UNLIM	-40 to 125	LVC165AQ
SN74LVC165APWRQ1	Active	Production	TSSOP (PW) | 16	3000 | LARGE T&R	Yes	NIPDAU	Level-1-260C-UNLIM	-40 to 125	LVC165Q
SN74LVC165APWRQ1.A	Active	Production	TSSOP (PW) | 16	3000 | LARGE T&R	Yes	NIPDAU	Level-1-260C-UNLIM	-40 to 125	LVC165Q
SN74LVC165AWBQBRQ1	Active	Production	WQFN (BQB) | 16	3000 | LARGE T&R	Yes	NIPDAU	Level-1-260C-UNLIM	-40 to 125	LC165Q
SN74LVC165AWBQBRQ1.A	Active	Production	WQFN (BQB) | 16	3000 | LARGE T&R	Yes	NIPDAU	Level-1-260C-UNLIM	-40 to 125	LC165Q

(1) **Status:** For more details on status, see our product life cycle.

(2) **Material type:** When designated, preproduction parts are prototypes/experimental devices, and are not yet approved or released for full production. Testing and final process, including without limitation quality assurance, reliability performance testing, and/or process qualification, may not yet be complete, and this item is subject to further changes or possible discontinuation. If available for ordering, purchases will be subject to an additional waiver at checkout, and are intended for early internal evaluation purposes only. These items are sold without warranties of any kind.

(3) **RoHS values:** Yes, No, RoHS Exempt. See the TI RoHS Statement for additional information and value definition.

(4) **Lead finish/Ball material:** Parts may have multiple material finish options. Finish options are separated by a vertical ruled line. Lead finish/Ball material values may wrap to two lines if the finish value exceeds the maximum column width.

(5) **MSL rating/Peak reflow:** The moisture sensitivity level ratings and peak solder (reflow) temperatures. In the event that a part has multiple moisture sensitivity ratings, only the lowest level per JEDEC standards is shown. Refer to the shipping label for the actual reflow temperature that will be used to mount the part to the printed circuit board.

(6) **Part marking:** There may be an additional marking, which relates to the logo, the lot trace code information, or the environmental category of the part.

Multiple part markings will be inside parentheses. Only one part marking contained in parentheses and separated by a "~" will appear on a part. If a line is indented then it is a continuation of the previous line and the two combined represent the entire part marking for that device.

Important Information and Disclaimer: The information provided on this page represents TI's knowledge and belief as of the date that it is provided. TI bases its knowledge and belief on information provided by third parties, and makes no representation or warranty as to the accuracy of such information. Efforts are underway to better integrate information from third parties. TI has taken and continues to take reasonable steps to provide representative and accurate information but may not have conducted destructive testing or chemical analysis on incoming materials and chemicals. TI and TI suppliers consider certain information to be proprietary, and thus CAS numbers and other limited information may not be available for release.

In no event shall TI's liability arising out of such information exceed the total purchase price of the TI part(s) at issue in this document sold by TI to Customer on an annual basis.

OTHER QUALIFIED VERSIONS OF SN74LVC165A-Q1 :

- Catalog : SN74LVC165A

NOTE: Qualified Version Definitions:

- Catalog - TI's standard catalog product

TAPE AND REEL INFORMATION

REEL DIMENSIONS

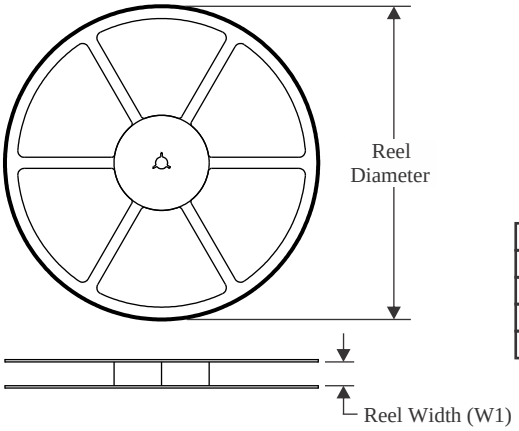

TAPE DIMENSIONS

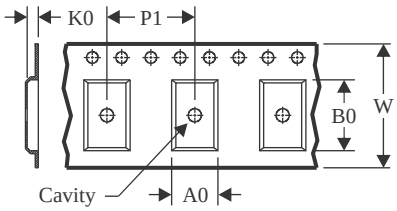

A0	Dimension designed to accommodate the component width
B0	Dimension designed to accommodate the component length
K0	Dimension designed to accommodate the component thickness
W	Overall width of the carrier tape
P1	Pitch between successive cavity centers

QUADRANT ASSIGNMENTS FOR PIN 1 ORIENTATION IN TAPE

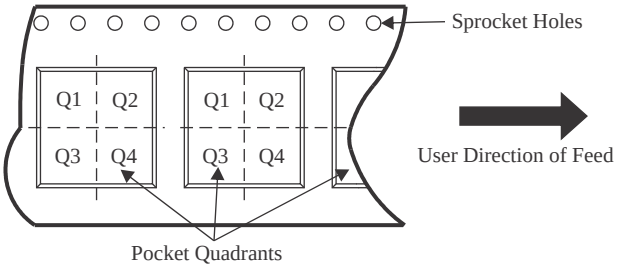

*All dimensions are nominal

Device	Package Type	Package Drawing	Pins	SPQ	Reel Diameter (mm)	Reel Width W1 (mm)	A0 (mm)	B0 (mm)	K0 (mm)	P1 (mm)	W (mm)	Pin1 Quadrant
SN74LVC165ADRQ1	SOIC	D	16	3000	330.0	12.4	3.75	3.75	1.15	8.0	12.0	Q1
SN74LVC165APWRQ1	TSSOP	PW	16	3000	330.0	12.4	6.9	5.6	1.6	8.0	12.0	Q1
SN74LVC165AWBQBRQ1	WQFN	BQB	16	3000	180.0	12.4	2.8	3.8	1.2	4.0	12.0	Q1

TAPE AND REEL BOX DIMENSIONS

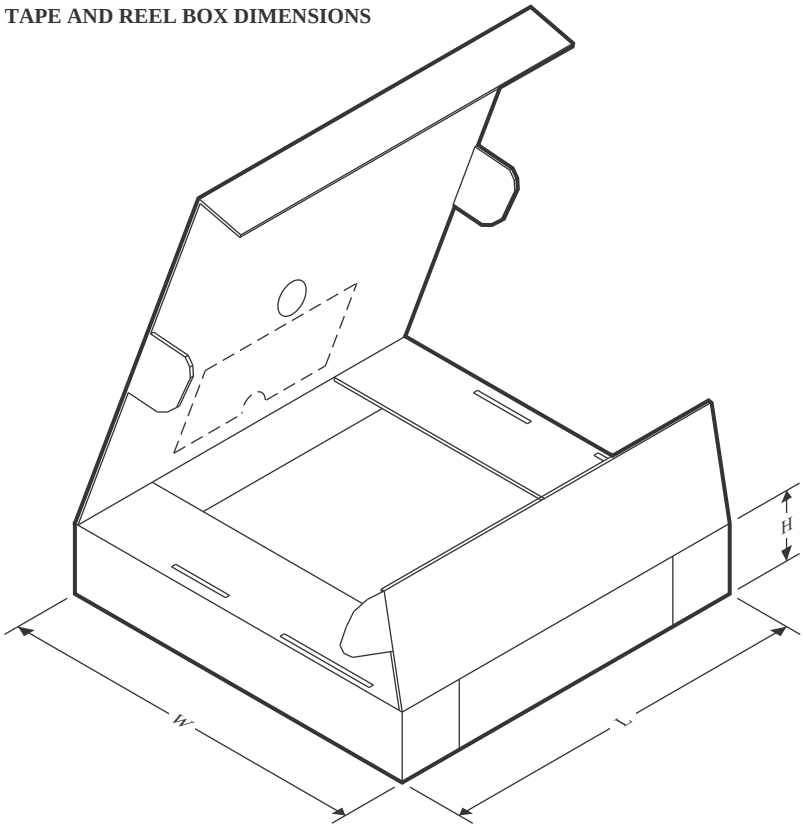

*All dimensions are nominal

Device	Package Type	Package Drawing	Pins	SPQ	Length (mm)	Width (mm)	Height (mm)
SN74LVC165ADRQ1	SOIC	D	16	3000	340.5	336.1	32.0
SN74LVC165APWRQ1	TSSOP	PW	16	3000	353.0	353.0	32.0
SN74LVC165AWBQBRQ1	WQFN	BQB	16	3000	210.0	185.0	35.0

D (R–PDSO–G16) PLASTIC SMALL OUTLINE

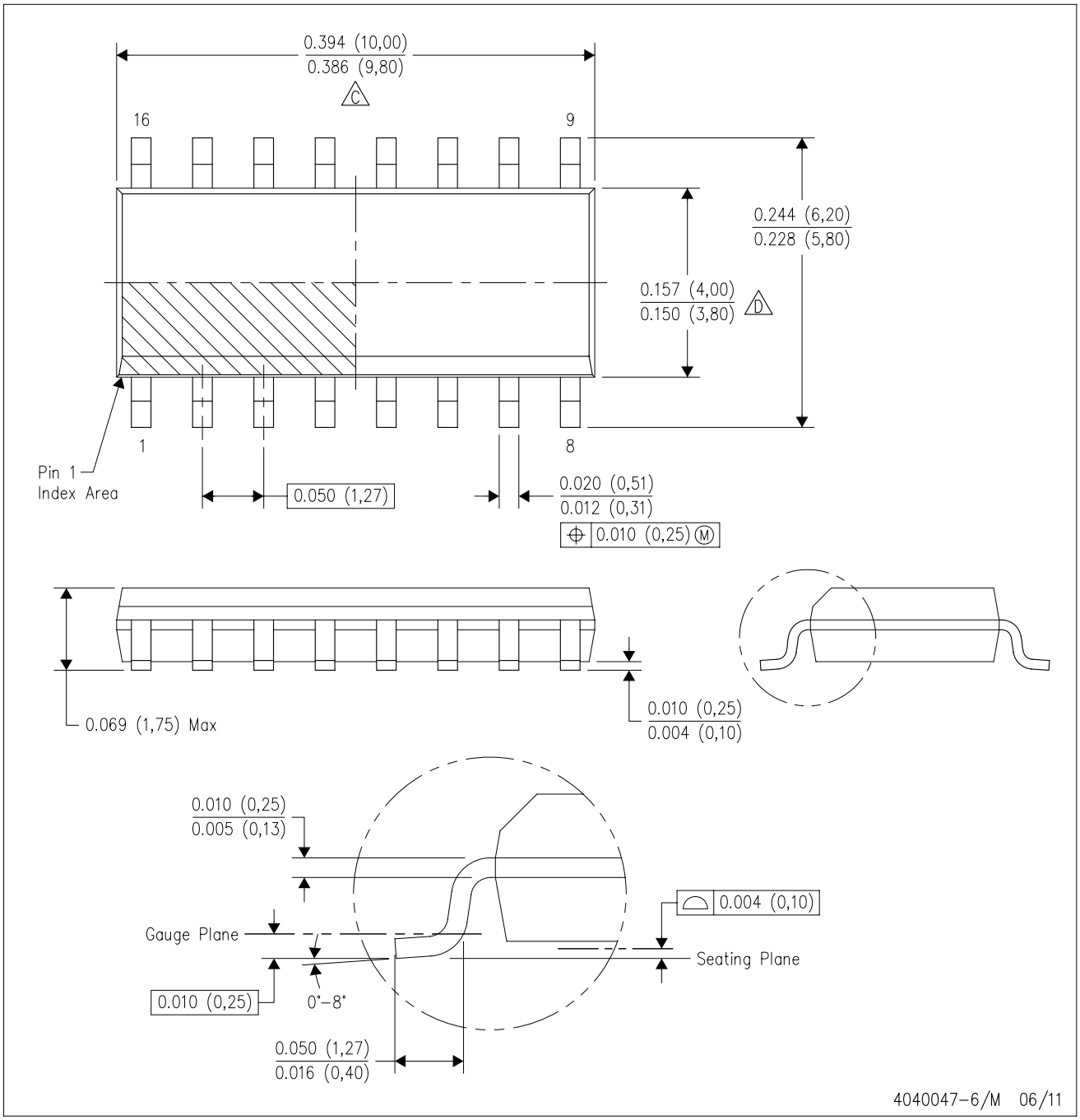

NOTES:
A. All linear dimensions are in inches (millimeters).
B. This drawing is subject to change without notice.
C. Body length does not include mold flash, protrusions, or gate burrs. Mold flash, protrusions, or gate burrs shall not exceed 0.006 (0,15) each side.
D. Body width does not include interlead flash. Interlead flash shall not exceed 0.017 (0,43) each side.
E. Reference JEDEC MS–012 variation AC.

PW0016A

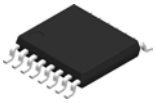

PACKAGE OUTLINE

TSSOP - 1.2 mm max height

SMALL OUTLINE PACKAGE

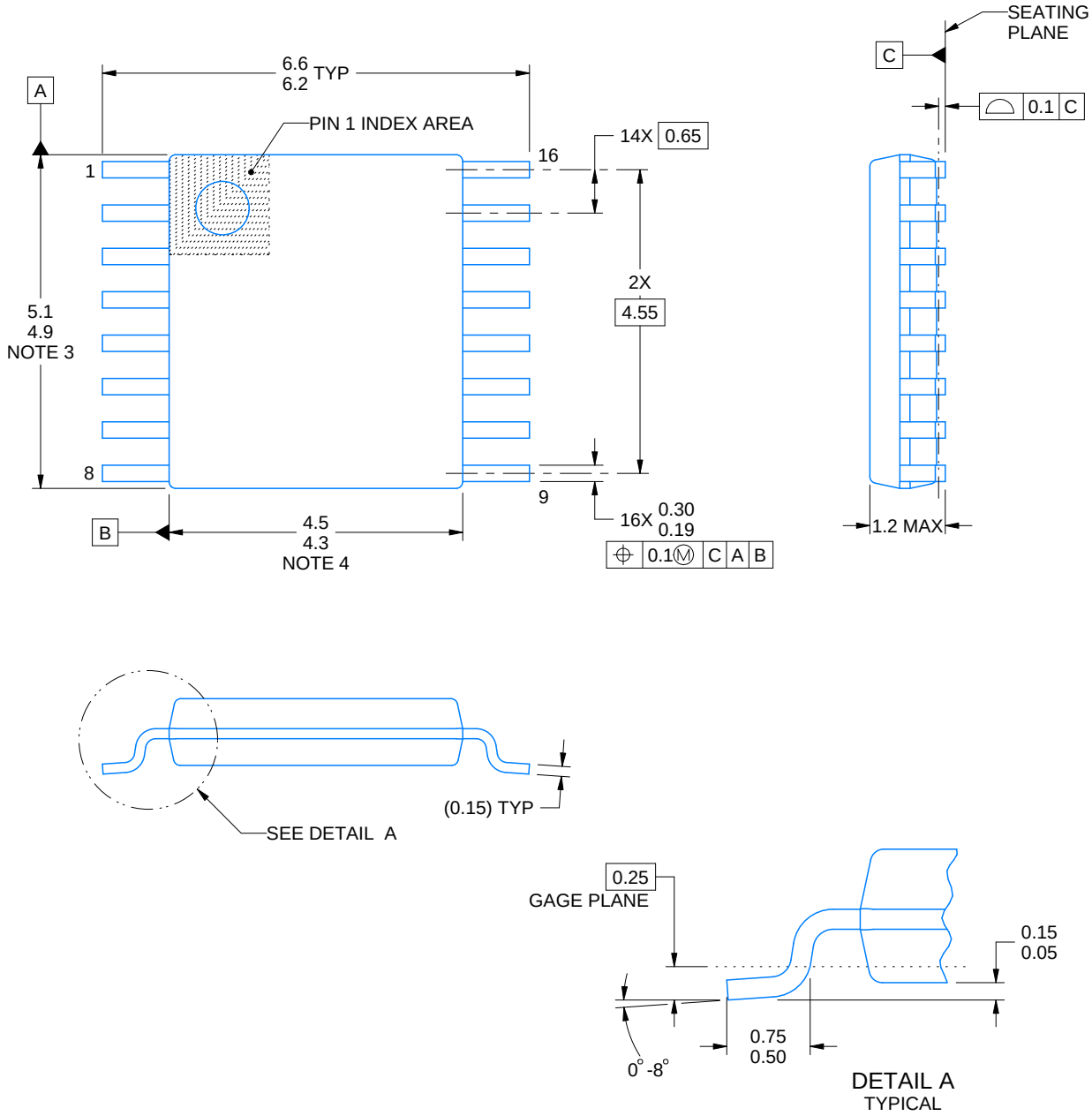

NOTES:

1. All linear dimensions are in millimeters. Any dimensions in parenthesis are for reference only. Dimensioning and tolerancing per ASME Y14.5M.
2. This drawing is subject to change without notice.
3. This dimension does not include mold flash, protrusions, or gate burrs. Mold flash, protrusions, or gate burrs shall not exceed 0.15 mm per side.
4. This dimension does not include interlead flash. Interlead flash shall not exceed 0.25 mm per side.
5. Reference JEDEC registration MO-153.

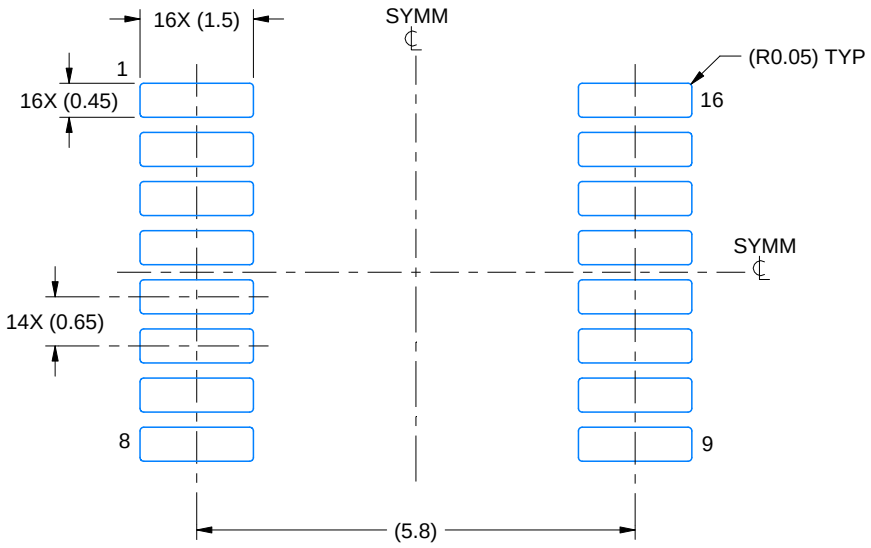

LAND PATTERN EXAMPLE
EXPOSED METAL SHOWN
SCALE: 10X

NON-SOLDER MASK DEFINED (PREFERRED)

SOLDER MASK DEFINED

SOLDER MASK DETAILS

4220204/A 02/2017

NOTES: (continued)

6. Publication IPC-7351 may have alternate designs.
7. Solder mask tolerances between and around signal pads can vary based on board fabrication site.

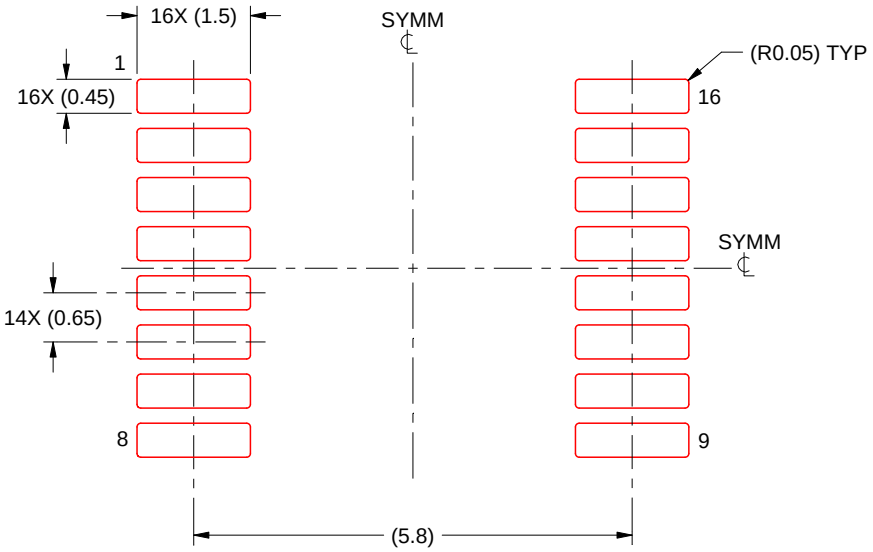

SOLDER PASTE EXAMPLE
BASED ON 0.125 mm THICK STENCIL
SCALE: 10X

4220204/A 02/2017

NOTES: (continued)

8. Laser cutting apertures with trapezoidal walls and rounded corners may offer better paste release. IPC-7525 may have alternate design recommendations.
9. Board assembly site may have different recommendations for stencil design.

GENERIC PACKAGE VIEW

BQB 16

WQFN - 0.8 mm max height

2.5 x 3.5, 0.5 mm pitch

PLASTIC QUAD FLATPACK - NO LEAD

This image is a representation of the package family, actual package may vary.
Refer to the product data sheet for package details.

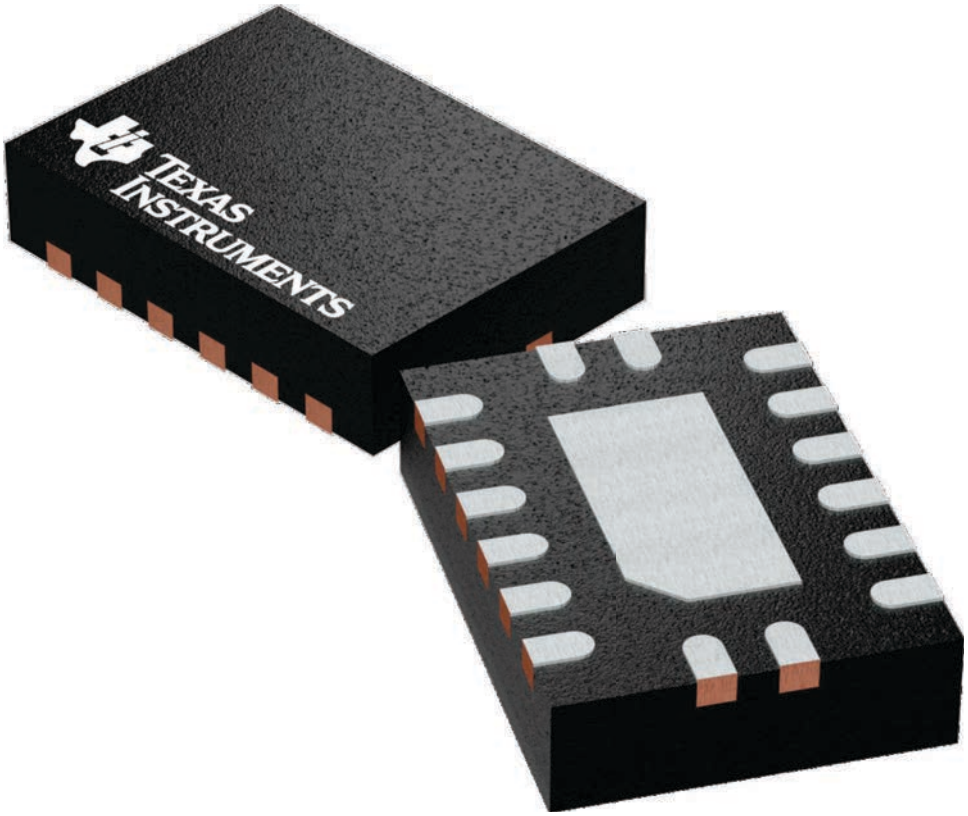

4226161/A

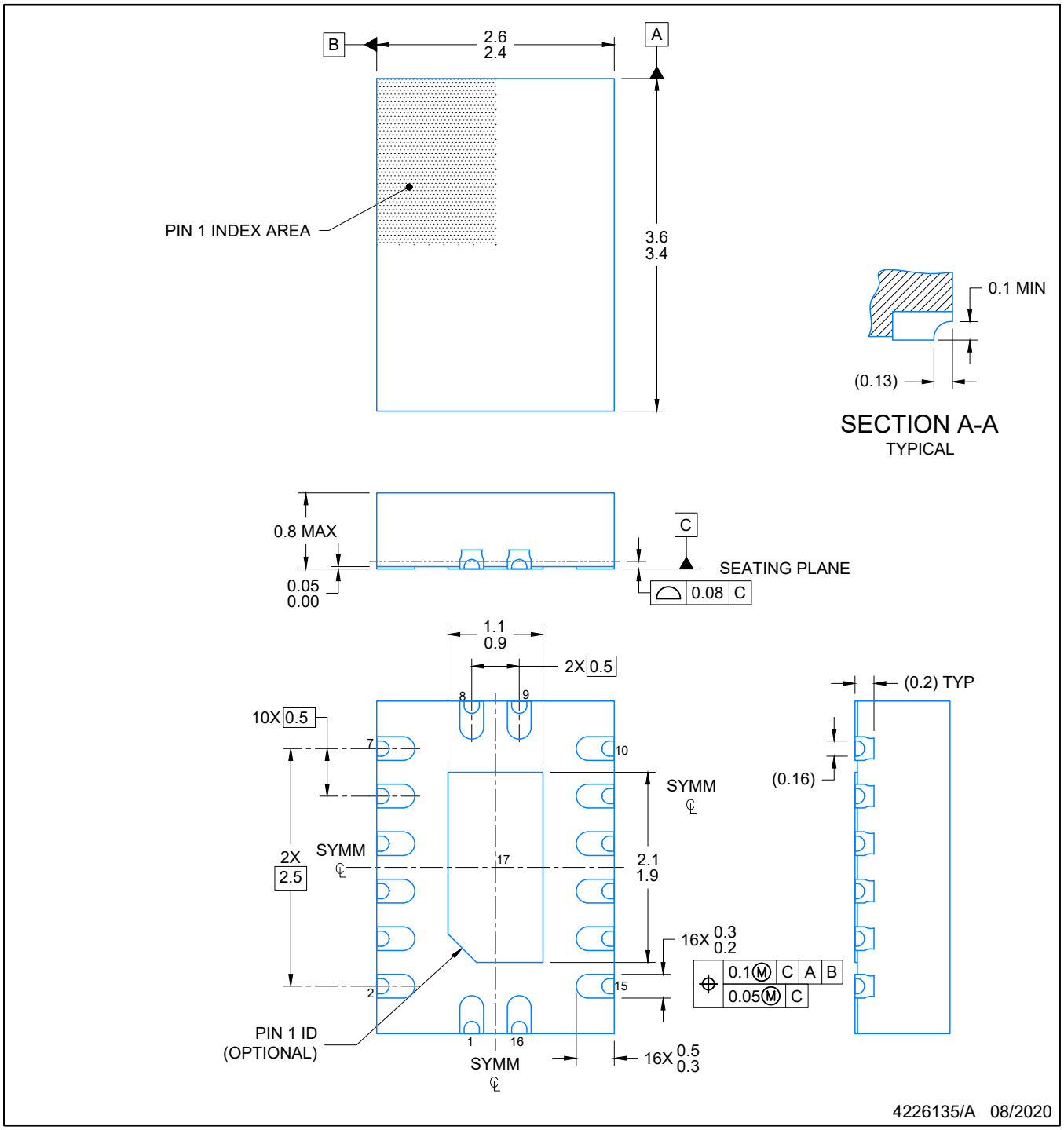

NOTES:

1. All linear dimensions are in millimeters. Any dimensions in parenthesis are for reference only. Dimensioning and tolerancing per ASME Y14.5M.
2. This drawing is subject to change without notice.
3. The package thermal pad must be soldered to the printed circuit board for optimal thermal and mechanical performance.

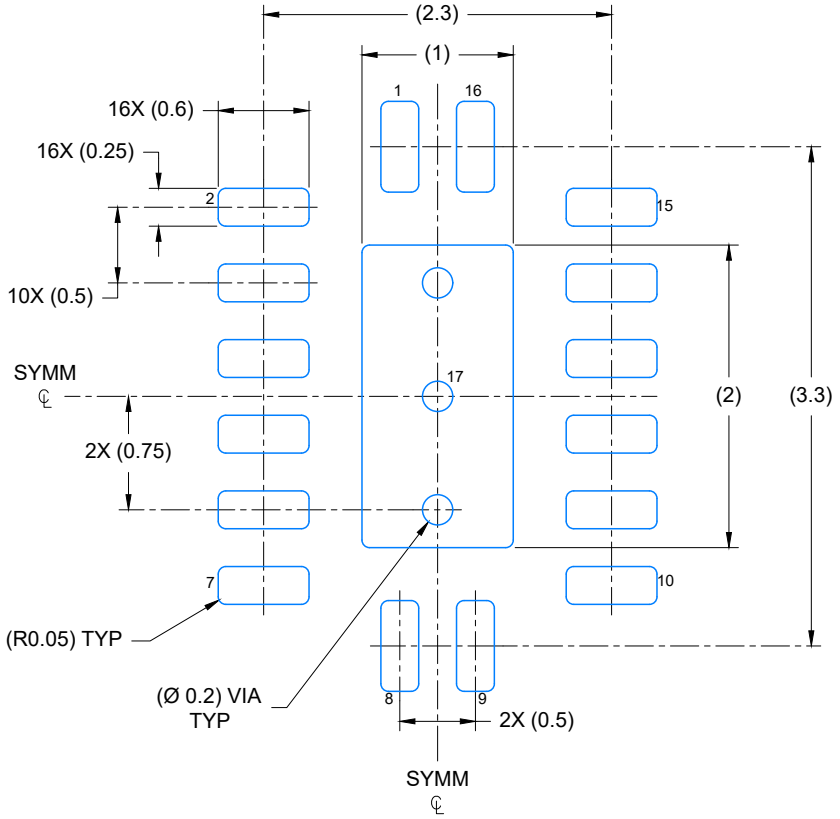

LAND PATTERN EXAMPLE
EXPOSED METAL SHOWN
SCALE: 20X

4226135/A 08/2020

NOTES: (continued)

4. This package is designed to be soldered to a thermal pad on the board. For more information, see Texas Instruments literature number SLUA271 (www.ti.com/lit/slua271).
5. Vias are optional depending on application, refer to device data sheet. If any vias are implemented, refer to their locations shown on this view. It is recommended that vias under paste be filled, plugged or tented.

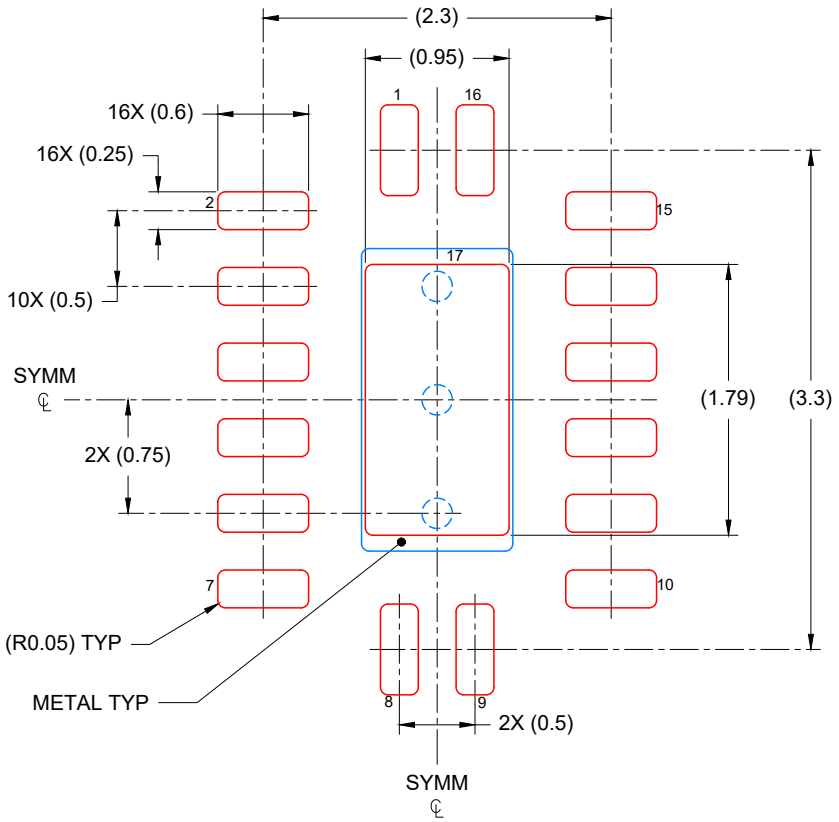

SOLDER PASTE EXAMPLE
BASED ON 0.125 mm THICK STENCIL

EXPOSED PAD
85% PRINTED COVERAGE BY AREA
SCALE: 20X

4226135/A 08/2020

NOTES: (continued)

6. Laser cutting apertures with trapezoidal walls and rounded corners may offer better paste release. IPC-7525 may have alternate design recommendations.

IMPORTANT NOTICE AND DISCLAIMER

TI PROVIDES TECHNICAL AND RELIABILITY DATA (INCLUDING DATA SHEETS), DESIGN RESOURCES (INCLUDING REFERENCE DESIGNS), APPLICATION OR OTHER DESIGN ADVICE, WEB TOOLS, SAFETY INFORMATION, AND OTHER RESOURCES “AS IS” AND WITH ALL FAULTS, AND DISCLAIMS ALL WARRANTIES, EXPRESS AND IMPLIED, INCLUDING WITHOUT LIMITATION ANY IMPLIED WARRANTIES OF MERCHANTABILITY, FITNESS FOR A PARTICULAR PURPOSE OR NON-INFRINGEMENT OF THIRD PARTY INTELLECTUAL PROPERTY RIGHTS.

These resources are intended for skilled developers designing with TI products. You are solely responsible for (1) selecting the appropriate TI products for your application, (2) designing, validating and testing your application, and (3) ensuring your application meets applicable standards, and any other safety, security, regulatory or other requirements.

These resources are subject to change without notice. TI grants you permission to use these resources only for development of an application that uses the TI products described in the resource. Other reproduction and display of these resources is prohibited. No license is granted to any other TI intellectual property right or to any third party intellectual property right. TI disclaims responsibility for, and you will fully indemnify TI and its representatives against, any claims, damages, costs, losses, and liabilities arising out of your use of these resources.

TI’s products are provided subject to TI’s Terms of Sale or other applicable terms available either on ti.com or provided in conjunction with such TI products. TI’s provision of these resources does not expand or otherwise alter TI’s applicable warranties or warranty disclaimers for TI products.

TI objects to and rejects any additional or different terms you may have proposed.

Mailing Address: Texas Instruments, Post Office Box 655303, Dallas, Texas 75265
Copyright © 2025, Texas Instruments Incorporated