SNx4HCT14 Hex Schmitt-Trigger Inverters

1 Features

- Operating Voltage Range of 4.5 V to 5.5 V
- Outputs Can Drive Up to 10 LSTTL Loads
- Low Power Consumption: 20-µA Maximum I_{CC}
- Typical t_{pd} = 18 ns
- ±4-mA Output Drive at 5 V
- Maximum Low Input Current of 1 µA Maximum
- Inputs Are TTL-Voltage Compatible

2 Applications

- UPS
- White Goods
- Computer Peripherals
- Printers
- AC Servo Drives
- Desktop Computers

3 Description

The SNx4HCT14 devices contain six independent inverters. The devices perform the Boolean function $Y = \overline{A}$ in positive logic.

Device Information(1)

PART NUMBER	PACKAGE	BODY SIZE (NOM)
SN54HCT14	CFP (14)	9.21 mm × 5.97 mm
	CDIP (14)	19.56 mm × 6.67 mm
	LCCC (20)	8.89 mm × 8.89 mm
SN74HCT14	SOIC (14)	8.65 mm × 3.91 mm
	TVSOP (14)	3.60 mm × 4.40 mm
	PDIP (14)	19.30 mm × 6.35 mm
	TSSOP (14)	5.00 mm × 4.40 mm

(1) For all available packages, see the orderable addendum at the end of the data sheet.

Logic Diagram (Positive Logic)

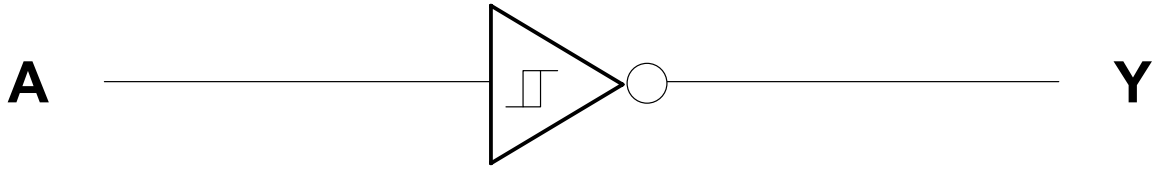

Copyright © 2016, Texas Instruments Incorporated

An IMPORTANT NOTICE at the end of this data sheet addresses availability, warranty, changes, use in safety-critical applications, intellectual property matters and other important disclaimers. PRODUCTION DATA.

Table of Contents

1 Features ... 1
2 Applications ... 1
3 Description ... 1
4 Revision History ... 2
5 Pin Configuration and Functions ... 3
6 Specifications ... 4
6.1 Absolute Maximum Ratings ... 4
6.2 ESD Ratings ... 4
6.3 Recommended Operating Conditions ... 4
6.4 Thermal Information ... 4
6.5 Electrical Characteristics ... 5
6.6 Switching Characteristics ... 6
6.7 Operating Characteristics ... 6
6.8 Typical Characteristics ... 6
7 Parameter Measurement Information ... 7
8 Detailed Description ... 8
8.1 Overview ... 8
8.2 Functional Block Diagram ... 8
8.3 Feature Description ... 8
8.4 Device Functional Modes ... 8
9 Application and Implementation ... 9
9.1 Application Information ... 9
9.2 Typical Application ... 9
10 Power Supply Recommendations ... 10
11 Layout ... 10
11.1 Layout Guidelines ... 10
11.2 Layout Example ... 10
12 Device and Documentation Support ... 11
12.1 Documentation Support ... 11
12.2 Related Links ... 11
12.3 Receiving Notification of Documentation Updates 11
12.4 Community Resource ... 11
12.5 Trademarks ... 11
12.6 Electrostatic Discharge Caution ... 11
12.7 Glossary ... 11
13 Mechanical, Packaging, and Orderable Information ... 11

4 Revision History

NOTE: Page numbers for previous revisions may differ from page numbers in the current version.

Changes from Revision F (October 2010) to Revision G	Page
• Added *ESD Ratings* table, *Feature Description* section, *Device Functional Modes*, *Application and Implementation* section, *Power Supply Recommendations* section, *Layout* section, *Device and Documentation Support* section, and *Mechanical, Packaging, and Orderable Information* section	1
• Deleted *Ordering Information* table; see *Package Option Addendum* at the end of the data sheet	1
• Changed Package thermal impedance, $R_{\theta JA}$, values in *Thermal Information* table From: 86 To: 90.9 (D), From: 96 To: 105 (DB), From: 127 To: 132.2 (DGV), From: 80 To: 55.3 (N), and From: 113 To: 120.2 (PW)	4

Copyright © 1995–2016, Texas Instruments Incorporated

5 Pin Configuration and Functions

D, DB, DGV, J, N, PW, or W Package
X-Pin SOIC, SSOP, TVSOP, CDIP, PDIP, TSSOP, or CFP
Top View

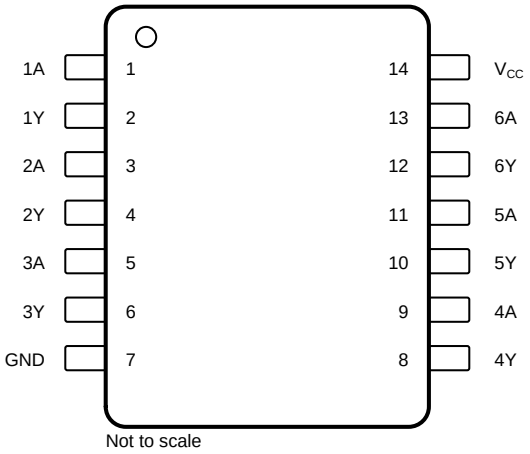

FK Package
X-Pin LCCC
Top View

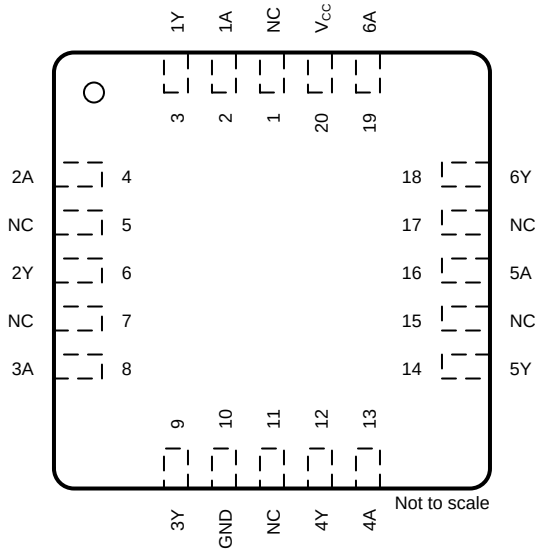

Pin Functions

PIN			I/O	DESCRIPTION
NAME	SOIC, SSOP, TVSOP, CDIP, PDIP, TSSOP, CFP	LCCC		
1A	1	2	I	Channel 1 input
1Y	2	3	O	Channel 1 output
2A	3	4	I	Channel 2 input
2Y	4	6	O	Channel 2 output
3A	5	8	I	Channel 3 input
3Y	6	9	O	Channel 3 output
4A	9	13	I	Channel 4 input
4Y	8	12	O	Channel 4 output
5A	11	16	I	Channel 5 input
5Y	10	14	O	Channel 5 output
6A	13	19	I	Channel 6 input
6Y	12	18	O	Channel 6 output
GND	7	10	—	Ground
NC	—	1, 5, 7, 11, 15, 17	—	No internal connection
V_{CC}	14	20	—	Power supply

Copyright © 1995–2016, Texas Instruments Incorporated

6 Specifications

6.1 Absolute Maximum Ratings

over operating free-air temperature range (unless otherwise noted)[1]

		MIN	MAX	UNIT
Supply voltage, V_{CC}		–0.5	7	V
Input voltage, V_I[2]		–0.5	V_{CC} + 0.5	V
Output voltage, V_O[2]		–0.5	V_{CC} + 0.5	V
Input clamp current, I_{IK}	$V_I < 0$ or $V_I > V_{CC}$		±20	mA
Output clamp current, I_{OK}	$V_O < 0$ or $V_O > V_{CC}$		±20	mA
Continuous output current, I_O	$V_O = 0$ to V_{CC}		±25	mA
Continuous current through V_{CC} or GND			±50	mA
Operating junction temperature, T_J			150	°C
Storage temperature, T_{stg}		–65	150	°C

(1) Stresses beyond those listed under *Absolute Maximum Ratings* may cause permanent damage to the device. These are stress ratings only, which do not imply functional operation of the device at these or any other conditions beyond those indicated under *Recommended Operating Conditions*. Exposure to absolute-maximum-rated conditions for extended periods may affect device reliability.
(2) The input and output voltage ratings may be exceeded if the input and output current ratings are observed.

6.2 ESD Ratings

			VALUE	UNIT
$V_{(ESD)}$	Electrostatic discharge	Human-body model (HBM), per ANSI/ESDA/JEDEC JS-001[1]	±2000	V
		Charged-device model (CDM), per JEDEC specification JESD22-C101[2]	±1000	

(1) JEDEC document JEP155 states that 500-V HBM allows safe manufacturing with a standard ESD control process.
(2) JEDEC document JEP157 states that 250-V CDM allows safe manufacturing with a standard ESD control process.

6.3 Recommended Operating Conditions

see[1]

			MIN	MAX	UNIT
V_{CC}	Supply voltage		4.5	5.5	V
V_I	Input voltage		0	V_{CC}	V
V_O	Output voltage		0	V_{CC}	V
T_A	Operating free-air temperature	SN54HCT14	–55	125	°C
		SN74HCT14	–40	85	

(1) All unused inputs of the device must be held at V_{CC} or GND to ensure proper device operation. See the TI application report, *Implications of Slow or Floating CMOS Inputs* (SCBA004).

6.4 Thermal Information

THERMAL METRIC[1]		SN74HCT14					UNIT
		D (SOIC)	DB (SSOP)	DGV (TVSOP)	N (PDIP)	PW (TSSOP)	
		14 PINS	14 PINS	14 PINS	14 PINS	14 PINS	
$R_{\theta JA}$	Junction-to-ambient thermal resistance	90.9	105	132.2	55.3	120.2	°C/W
$R_{\theta JC(top)}$	Junction-to-case (top) thermal resistance	51	57	51.7	42.5	48.9	°C/W
$R_{\theta JB}$	Junction-to-board thermal resistance	45.2	52.4	61.4	35.1	61.9	°C/W
ψ_{JT}	Junction-to-top characterization parameter	18.4	22.2	5.5	27.2	5.7	°C/W
ψ_{JB}	Junction-to-board characterization parameter	44.9	51.8	60.7	35	61.3	°C/W

(1) For more information about traditional and new thermal metrics, see the *Semiconductor and IC Package Thermal Metrics* application report.

Copyright © 1995–2016, Texas Instruments Incorporated

6.5 Electrical Characteristics

over recommended operating free-air temperature range (unless otherwise noted)

PARAMETER		TEST CONDITIONS		MIN	TYP	MAX	UNIT
V_{T+}	Positive-going threshold	V_{CC} = 4.5 V	T_A = 25°C	1.2	1.5	1.9	V
			SN54HCT14	1.2		1.9	
			SN74HCT14	1.2		1.9	
		V_{CC} = 5.5 V	T_A = 25°C	1.4	1.7	2.1	
			SN54HCT14	1.4		2.1	
			SN74HCT14	1.4		2.1	
V_{T-}	Negative-going threshold	V_{CC} = 4.5 V	T_A = 25°C	0.5	0.9	1.2	V
			SN54HCT14	0.5		1.2	
			SN74HCT14	0.5		1.2	
		V_{CC} = 5.5 V	T_A = 25°C	0.6	1	1.4	
			SN54HCT14	0.6		1.4	
			SN74HCT14	0.6		1.4	
ΔV_T	Hysteresis ($V_{T+} – V_{T-}$)	V_{CC} = 4.5 V	T_A = 25°C	0.4	0.6	1.4	V
			SN54HCT14	0.4		1.4	
			SN74HCT14	0.4		1.4	
		V_{CC} = 5.5 V	T_A = 25°C	0.4	0.65	1.5	
			SN54HCT14	0.4		1.5	
			SN74HCT14	0.4		1.5	
V_{OH}	High-level output voltage	I_{OH} = –20 µA and V_{CC} = 4.5 V	T_A = 25°C	4.4	4.49		V
			SN54HCT14	4.4			
			SN74HCT14	4.4			
		I_{OH} = –4 mA and V_{CC} = 4.5 V	T_A = 25°C	3.98	4.3		
			SN54HCT14	3.7			
			SN74HCT14	3.84			
V_{OL}	Low-level output voltage	I_{OL} = 20 µA and V_{CC} = 4.5 V	T_A = 25°C		0.001	0.1	V
			SN54HCT14			0.1	
			SN74HCT14			0.1	
		I_{OL} = 4 mA and V_{CC} = 4.5 V	T_A = 25°C		0.17	0.26	
			SN54HCT14			0.4	
			SN74HCT14			0.33	
I_I	Input current	V_I = V_{CC} or GND and V_{CC} = 5.5 V	T_A = 25°C			±0.1	µA
			SN54HCT14			±1	
			SN74HCT14			±1	
I_{CC}	Supply current	V_I = V_{CC} or GND, I_O = 0, and V_{CC} = 5.5 V	T_A = 25°C			2	µA
			SN54HCT14			40	
			SN74HCT14			20	
ΔI_{CC} (1)	Change in supply current	One input at 0.5 V or 2.4 V, other inputs at GND or V_{CC}, and V_{CC} = 5.5 V	T_A = 25°C		0.2	2.4	mA
			SN54HCT14			3	
			SN74HCT14			2.9	
C_i	Input capacitance	V_I = V_{CC} or GND and V_{CC} = 5 V	T_A = 25°C		3	10	pF
			SN54HCT14			10	
			SN74HCT14			10	

(1) This is the increase in supply current for each input that is at one of the specified TTL voltage levels, rather than 0 V or V_{CC}.

Copyright © 1995–2016, Texas Instruments Incorporated

6.6 Switching Characteristics

over recommended operating free-air temperature range and C_L = 50 pF (unless otherwise noted; see Figure 5)

PARAMETER		FROM (INPUT)	TO (OUTPUT)	TEST CONDITIONS		MIN	TYP	MAX	UNIT
t_{pd}	Propagation (delay) time	A	Y	V_{CC} = 4.5 V	T_A = 25°C		20	32	ns
					SN54HCT14			48	
					SN74HCT14			40	
				V_{CC} = 5.5 V	T_A = 25°C		18	30	
					SN54HCT14			45	
					SN74HCT14			38	
t_t		—	Y	V_{CC} = 4.5 V	T_A = 25°C		7	15	ns
					SN54HCT14			22	
					SN74HCT14			19	
				V_{CC} = 5.5 V	T_A = 25°C		6	14	
					SN54HCT14			20	
					SN74HCT14			17	

6.7 Operating Characteristics

T_A = 25°C

PARAMETER		TEST CONDITIONS	TYP	UNIT
C_{pd}	Power dissipation capacitance	No load	10	pF

6.8 Typical Characteristics

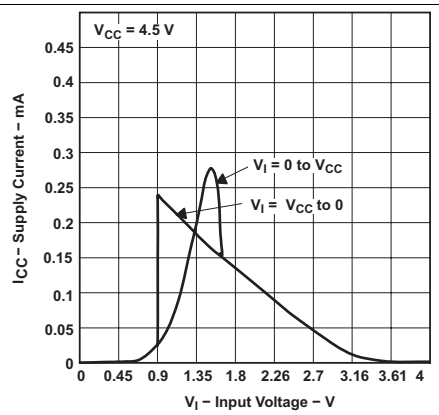

Figure 1. Supply Current vs Input Voltage

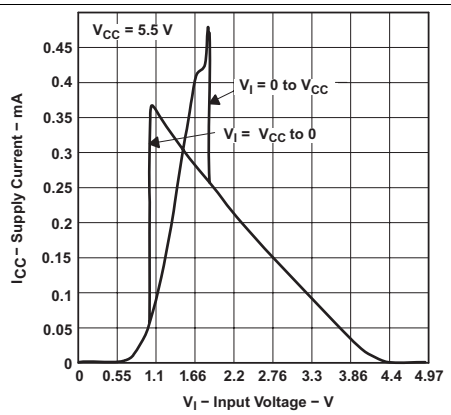

Figure 2. Supply Current vs Input Voltage

Copyright © 1995–2016, Texas Instruments Incorporated

Typical Characteristics (continued)

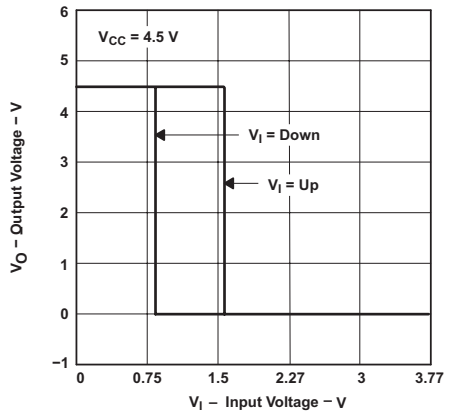

Figure 3. Output Voltage vs Input Voltage

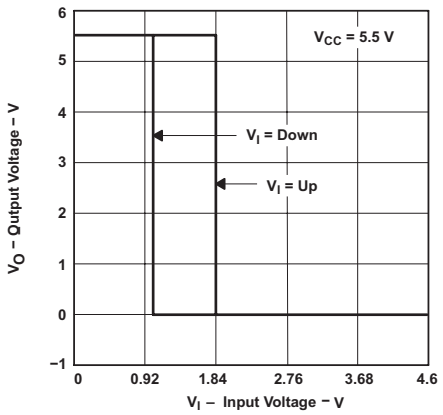

Figure 4. Output Voltage vs Input Voltage

7 Parameter Measurement Information

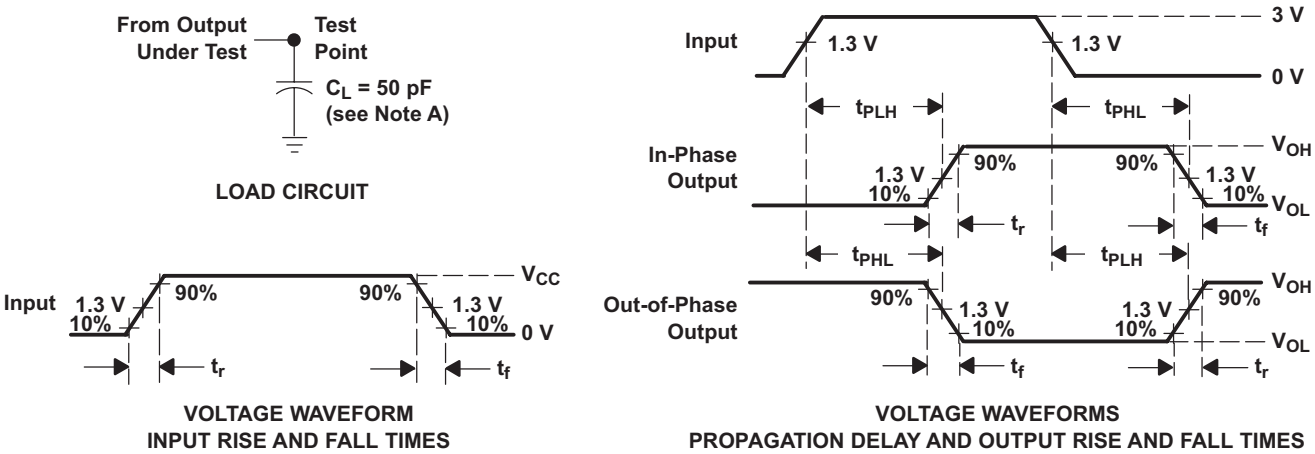

A. C_L includes probe and test-fixture capacitance.

B. Phase relationships between waveforms were chosen arbitrarily. All input pulses are supplied by generators having the following characteristics: PRR ≤ 1 MHz, Z_O = 50 Ω, t_r = 6 ns, t_f = 6 ns.

C. The outputs are measured one at a time with one input transition per measurement.

D. t_{PLH} and t_{PHL} are the same as t_{pd}.

Figure 5. Load Circuit and Voltage Waveforms

8 Detailed Description

8.1 Overview

The SNx4HCT14 Schmitt-Trigger devices contain six independent inverters. They perform the Boolean function $Y = \overline{A}$ in positive logic.

Schmitt-Trigger inputs are designed to provide a minimum separation between positive and negative switching thresholds. This allows for noisy or slow inputs that would cause problems such as oscillation or excessive current draw with normal CMOS inputs.

8.2 Functional Block Diagram

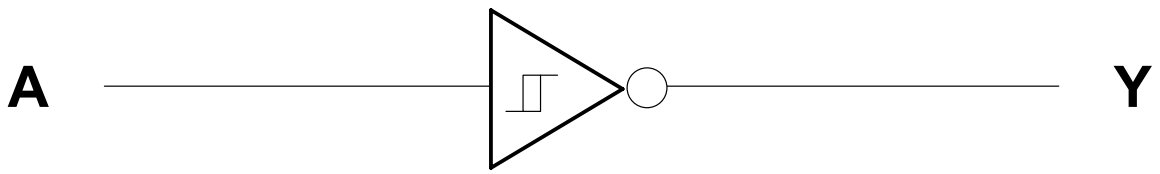

Copyright © 2016, Texas Instruments Incorporated

8.3 Feature Description

The wide operating range of these devices allow them to be used in a variety of systems that use different logic levels. The outputs can drive up to 10 LSTTL loads each. The balanced drive outputs can source or sink 8 mA at 5-V V_{CC}. This device is also input TTL compatible.

8.4 Device Functional Modes

Table 1 lists the functional modes of the SNx4HCT14.

Table 1. Function Table

INPUT A	OUTPUT Y
H	L
L	H

Copyright © 1995–2016, Texas Instruments Incorporated

9 Application and Implementation

NOTE

Information in the following applications sections is not part of the TI component specification, and TI does not warrant its accuracy or completeness. TI's customers are responsible for determining suitability of components for their purposes. Customers should validate and test their design implementation to confirm system functionality.

9.1 Application Information

The SN74HCT14 device is a Schmitt-Trigger input CMOS device that can be used for a multitude of inverting buffer type functions. The application shown here takes advantage of the Schmitt-Trigger inputs to produce a delay for a logic input.

9.2 Typical Application

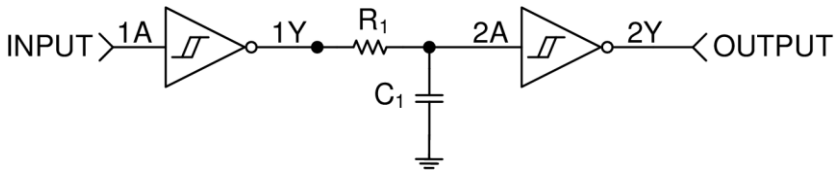

Copyright © 2016, Texas Instruments Incorporated

Figure 6. Simplified Application Schematic

9.2.1 Design Requirements

This device uses CMOS technology. Take care to avoid bus contention, because it can drive currents that would exceed maximum limits. Parallel output drive can create fast edges into light loads, so consider routing and load conditions to prevent ringing.

9.2.2 Detailed Design Procedure

This circuit is designed around an RC network that produces a slow input to the second inverter. The RC time constant, τ, is calculated from: $\tau = RC$.

The delay time for this circuit is from $t_{delay(min)} = -\ln |1 - V_{T+(min)} / V_{CC}| \tau$ to $t_{delay(max)} = -\ln |1 - V_{T+(max)} / V_{CC}| \tau$. It must be noted that the delay is consistent for each device, but because the switching threshold is only ensured between the minimum and maximum value, the output pulse length varies between devices. These values must be calculated by using the minimum and maximum ensured V_{T+} values in the *Electrical Characteristics*.

The resistor value must be chosen such that the maximum current to and from the SN74HCT14 is 8 mA at 5-V V_{CC}.

Typical Application (continued)

9.2.3 Application Curve

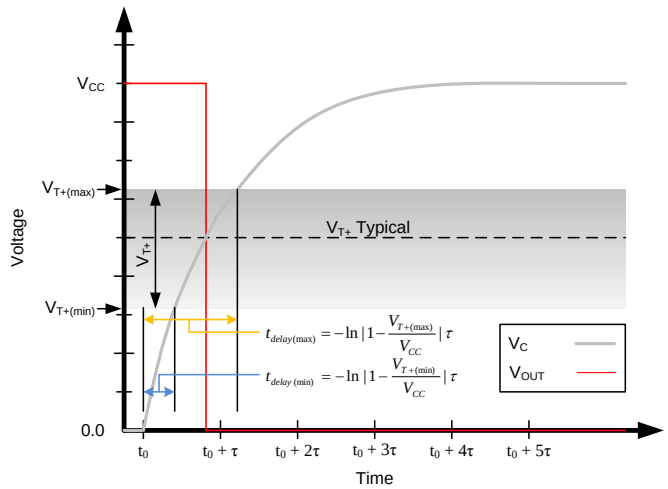

Figure 7. Ideal Capacitor Voltage and Output Voltage With Positive Switching Threshold

10 Power Supply Recommendations

The power supply can be any voltage between the minimum and maximum supply voltage rating located in the *Recommended Operating Conditions*. The V_{CC} terminal must have a good bypass capacitor to prevent power disturbance. TI recommends using a 0.1-µF capacitor on the V_{CC} terminal, and must be placed as close as possible to the pin for best results.

11 Layout

11.1 Layout Guidelines

When using multiple bit logic devices, inputs must never float. In many cases, functions or parts of functions of digital logic devices are unused, for example, when only two inputs of a triple-input AND gate are used or only three of the four buffer gates are used. Such inputs must not be left unconnected because the undefined voltages at the outside connections result in undefined operational states. All unused inputs of digital logic devices must be connected to a high or low bias to prevent them from floating. The logic level that must be applied to any particular unused input depends on the function of the device. Generally they are tied to GND or V_{CC}, whichever makes more sense or is more convenient. Floating outputs are generally acceptable, unless the part is a transceiver.

11.2 Layout Example

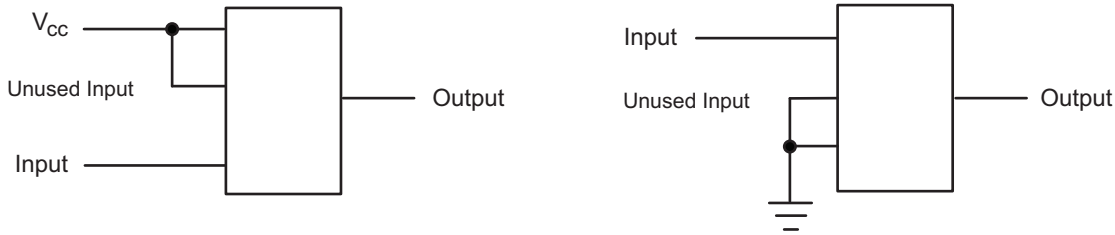

Figure 8. Layout Diagram

Copyright © 1995–2016, Texas Instruments Incorporated

12 Device and Documentation Support

12.1 Documentation Support

12.1.1 Related Documentation

For related documentation see the following:

Implications of Slow or Floating CMOS Inputs (SCBA004)

12.2 Related Links

The table below lists quick access links. Categories include technical documents, support and community resources, tools and software, and quick access to sample or buy.

Table 2. Related Links

PARTS	PRODUCT FOLDER	SAMPLE & BUY	TECHNICAL DOCUMENTS	TOOLS & SOFTWARE	SUPPORT & COMMUNITY
SN54HCT14	Click here	Click here	Click here	Click here	Click here
SN74HCT14	Click here	Click here	Click here	Click here	Click here

12.3 Receiving Notification of Documentation Updates

To receive notification of documentation updates, navigate to the device product folder on ti.com. In the upper right corner, click on *Alert me* to register and receive a weekly digest of any product information that has changed. For change details, review the revision history included in any revised document.

12.4 Community Resource

The following links connect to TI community resources. Linked contents are provided "AS IS" by the respective contributors. They do not constitute TI specifications and do not necessarily reflect TI's views; see TI's Terms of Use.

TI E2E™ Online Community ***TI's Engineer-to-Engineer (E2E) Community.*** Created to foster collaboration among engineers. At e2e.ti.com, you can ask questions, share knowledge, explore ideas and help solve problems with fellow engineers.

Design Support ***TI's Design Support*** Quickly find helpful E2E forums along with design support tools and contact information for technical support.

12.5 Trademarks

E2E is a trademark of Texas Instruments.
All other trademarks are the property of their respective owners.

12.6 Electrostatic Discharge Caution

These devices have limited built-in ESD protection. The leads should be shorted together or the device placed in conductive foam during storage or handling to prevent electrostatic damage to the MOS gates.

12.7 Glossary

SLYZ022 — *TI Glossary*.

This glossary lists and explains terms, acronyms, and definitions.

13 Mechanical, Packaging, and Orderable Information

The following pages include mechanical, packaging, and orderable information. This information is the most current data available for the designated devices. This data is subject to change without notice and revision of this document. For browser-based versions of this data sheet, refer to the left-hand navigation.

PACKAGING INFORMATION

Orderable part number	Status (1)	Material type (2)	Package | Pins	Package qty | Carrier	RoHS (3)	Lead finish/ Ball material (4)	MSL rating/ Peak reflow (5)	Op temp (°C)	Part marking (6)
5962-86890012A	Active	Production	LCCC (FK) | 20	55 | TUBE	No	SNPB	N/A for Pkg Type	-55 to 125	5962-86890012A SNJ54HCT14FK
5962-8689001CA	Active	Production	CDIP (J) | 14	25 | TUBE	No	SNPB	N/A for Pkg Type	-55 to 125	5962-8689001CA SNJ54HCT14J
5962-8689001DA	Active	Production	CFP (W) | 14	25 | TUBE	No	SNPB	N/A for Pkg Type	-55 to 125	5962-8689001DA SNJ54HCT14W
SN74HCT14D	Obsolete	Production	SOIC (D) | 14	-	-	Call TI	Call TI	-40 to 85	HCT14
SN74HCT14DBR	Active	Production	SSOP (DB) | 14	2000 | LARGE T&R	Yes	NIPDAU	Level-1-260C-UNLIM	-40 to 85	HT14
SN74HCT14DBR.A	Active	Production	SSOP (DB) | 14	2000 | LARGE T&R	Yes	NIPDAU	Level-1-260C-UNLIM	-40 to 85	HT14
SN74HCT14DGVR	Active	Production	TVSOP (DGV) | 14	2000 | LARGE T&R	Yes	NIPDAU	Level-1-260C-UNLIM	-40 to 85	HT14
SN74HCT14DGVR.A	Active	Production	TVSOP (DGV) | 14	2000 | LARGE T&R	Yes	NIPDAU	Level-1-260C-UNLIM	-40 to 85	HT14
SN74HCT14DR	Active	Production	SOIC (D) | 14	2500 | LARGE T&R	Yes	NIPDAU | SN | NIPDAU	Level-1-260C-UNLIM	-40 to 85	HCT14
SN74HCT14DR.A	Active	Production	SOIC (D) | 14	2500 | LARGE T&R	Yes	NIPDAU	Level-1-260C-UNLIM	-40 to 85	HCT14
SN74HCT14DRG3	Active	Production	SOIC (D) | 14	2500 | LARGE T&R	Yes	SN	Level-1-260C-UNLIM	-40 to 85	HCT14
SN74HCT14DRG3.A	Active	Production	SOIC (D) | 14	2500 | LARGE T&R	Yes	SN	Level-1-260C-UNLIM	-40 to 85	HCT14
SN74HCT14DRG4	Active	Production	SOIC (D) | 14	2500 | LARGE T&R	Yes	NIPDAU | NIPDAU	Level-1-260C-UNLIM	-40 to 85	HCT14
SN74HCT14DRG4.A	Active	Production	SOIC (D) | 14	2500 | LARGE T&R	Yes	NIPDAU	Level-1-260C-UNLIM	-40 to 85	HCT14
SN74HCT14DT	Obsolete	Production	SOIC (D) | 14	-	-	Call TI	Call TI	-40 to 85	HCT14
SN74HCT14N	Active	Production	PDIP (N) | 14	25 | TUBE	Yes	NIPDAU	N/A for Pkg Type	-40 to 85	SN74HCT14N
SN74HCT14N.A	Active	Production	PDIP (N) | 14	25 | TUBE	Yes	NIPDAU	N/A for Pkg Type	-40 to 85	SN74HCT14N
SN74HCT14NE4	Active	Production	PDIP (N) | 14	25 | TUBE	Yes	NIPDAU	N/A for Pkg Type	-40 to 85	SN74HCT14N
SN74HCT14PWR	Active	Production	TSSOP (PW) | 14	2000 | LARGE T&R	Yes	NIPDAU | SN	Level-1-260C-UNLIM	-40 to 85	HT14
SN74HCT14PWR.A	Active	Production	TSSOP (PW) | 14	2000 | LARGE T&R	Yes	NIPDAU	Level-1-260C-UNLIM	-40 to 85	HT14
SN74HCT14PWRE4	Active	Production	TSSOP (PW) | 14	2000 | LARGE T&R	Yes	NIPDAU	Level-1-260C-UNLIM	-40 to 85	HT14
SN74HCT14PWRG4	Active	Production	TSSOP (PW) | 14	2000 | LARGE T&R	Yes	NIPDAU	Level-1-260C-UNLIM	-40 to 85	HT14
SN74HCT14PWRG4.A	Active	Production	TSSOP (PW) | 14	2000 | LARGE T&R	Yes	NIPDAU	Level-1-260C-UNLIM	-40 to 85	HT14
SN74HCT14PWT	Obsolete	Production	TSSOP (PW) | 14	-	-	Call TI	Call TI	-40 to 85	HT14

Orderable part number	Status (1)	Material type (2)	Package | Pins	Package qty | Carrier	RoHS (3)	Lead finish/ Ball material (4)	MSL rating/ Peak reflow (5)	Op temp (°C)	Part marking (6)
SNJ54HCT14FK	Active	Production	LCCC (FK) | 20	55 | TUBE	No	SNPB	N/A for Pkg Type	-55 to 125	5962-86890012A SNJ54HCT 14FK
SNJ54HCT14FK.A	Active	Production	LCCC (FK) | 20	55 | TUBE	No	SNPB	N/A for Pkg Type	-55 to 125	5962-86890012A SNJ54HCT 14FK
SNJ54HCT14J	Active	Production	CDIP (J) | 14	25 | TUBE	No	SNPB	N/A for Pkg Type	-55 to 125	5962-8689001CA SNJ54HCT14J
SNJ54HCT14J.A	Active	Production	CDIP (J) | 14	25 | TUBE	No	SNPB	N/A for Pkg Type	-55 to 125	5962-8689001CA SNJ54HCT14J
SNJ54HCT14W	Active	Production	CFP (W) | 14	25 | TUBE	No	SNPB	N/A for Pkg Type	-55 to 125	5962-8689001DA SNJ54HCT14W
SNJ54HCT14W.A	Active	Production	CFP (W) | 14	25 | TUBE	No	SNPB	N/A for Pkg Type	-55 to 125	5962-8689001DA SNJ54HCT14W

(1) **Status:** For more details on status, see our product life cycle.

(2) **Material type:** When designated, preproduction parts are prototypes/experimental devices, and are not yet approved or released for full production. Testing and final process, including without limitation quality assurance, reliability performance testing, and/or process qualification, may not yet be complete, and this item is subject to further changes or possible discontinuation. If available for ordering, purchases will be subject to an additional waiver at checkout, and are intended for early internal evaluation purposes only. These items are sold without warranties of any kind.

(3) **RoHS values:** Yes, No, RoHS Exempt. See the TI RoHS Statement for additional information and value definition.

(4) **Lead finish/Ball material:** Parts may have multiple material finish options. Finish options are separated by a vertical ruled line. Lead finish/Ball material values may wrap to two lines if the finish value exceeds the maximum column width.

(5) **MSL rating/Peak reflow:** The moisture sensitivity level ratings and peak solder (reflow) temperatures. In the event that a part has multiple moisture sensitivity ratings, only the lowest level per JEDEC standards is shown. Refer to the shipping label for the actual reflow temperature that will be used to mount the part to the printed circuit board.

(6) **Part marking:** There may be an additional marking, which relates to the logo, the lot trace code information, or the environmental category of the part.

Multiple part markings will be inside parentheses. Only one part marking contained in parentheses and separated by a "~" will appear on a part. If a line is indented then it is a continuation of the previous line and the two combined represent the entire part marking for that device.

Important Information and Disclaimer: The information provided on this page represents TI's knowledge and belief as of the date that it is provided. TI bases its knowledge and belief on information provided by third parties, and makes no representation or warranty as to the accuracy of such information. Efforts are underway to better integrate information from third parties. TI has taken and continues to take reasonable steps to provide representative and accurate information but may not have conducted destructive testing or chemical analysis on incoming materials and chemicals. TI and TI suppliers consider certain information to be proprietary, and thus CAS numbers and other limited information may not be available for release.

In no event shall TI's liability arising out of such information exceed the total purchase price of the TI part(s) at issue in this document sold by TI to Customer on an annual basis.

OTHER QUALIFIED VERSIONS OF SN54HCT14, SN74HCT14 :

- Catalog : SN74HCT14
- Automotive : SN74HCT14-Q1, SN74HCT14-Q1
- Military : SN54HCT14

NOTE: Qualified Version Definitions:

- Catalog - TI's standard catalog product
- Automotive - Q100 devices qualified for high-reliability automotive applications targeting zero defects
- Military - QML certified for Military and Defense Applications

TAPE AND REEL INFORMATION

REEL DIMENSIONS

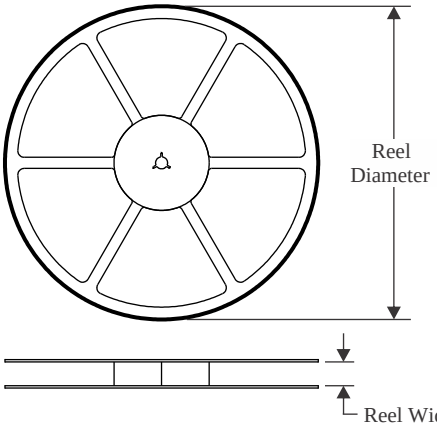

TAPE DIMENSIONS

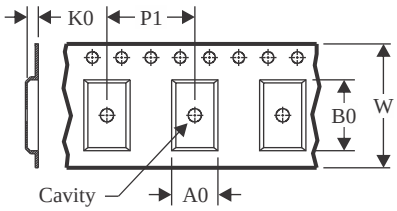

A0	Dimension designed to accommodate the component width
B0	Dimension designed to accommodate the component length
K0	Dimension designed to accommodate the component thickness
W	Overall width of the carrier tape
P1	Pitch between successive cavity centers

QUADRANT ASSIGNMENTS FOR PIN 1 ORIENTATION IN TAPE

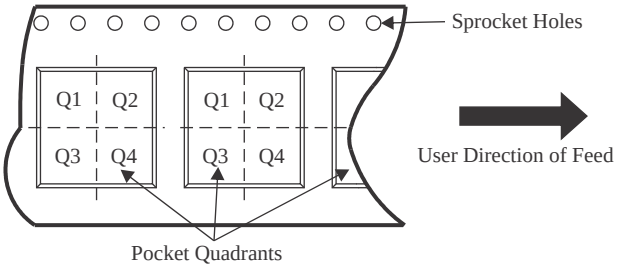

*All dimensions are nominal

Device	Package Type	Package Drawing	Pins	SPQ	Reel Diameter (mm)	Reel Width W1 (mm)	A0 (mm)	B0 (mm)	K0 (mm)	P1 (mm)	W (mm)	Pin1 Quadrant
SN74HCT14DBR	SSOP	DB	14	2000	330.0	16.4	8.35	6.6	2.4	12.0	16.0	Q1
SN74HCT14DGVR	TVSOP	DGV	14	2000	330.0	12.4	6.8	4.0	1.6	8.0	12.0	Q1
SN74HCT14DR	SOIC	D	14	2500	330.0	16.4	6.6	9.3	2.1	8.0	16.0	Q1
SN74HCT14DR	SOIC	D	14	2500	330.0	16.4	6.5	9.0	2.1	8.0	16.0	Q1
SN74HCT14DRG3	SOIC	D	14	2500	330.0	16.8	6.5	9.5	2.1	8.0	16.0	Q1
SN74HCT14DRG4	SOIC	D	14	2500	330.0	16.4	6.5	9.0	2.1	8.0	16.0	Q1
SN74HCT14PWR	TSSOP	PW	14	2000	330.0	12.4	6.9	5.6	1.6	8.0	12.0	Q1
SN74HCT14PWRG4	TSSOP	PW	14	2000	330.0	12.4	6.9	5.6	1.6	8.0	12.0	Q1

TAPE AND REEL BOX DIMENSIONS

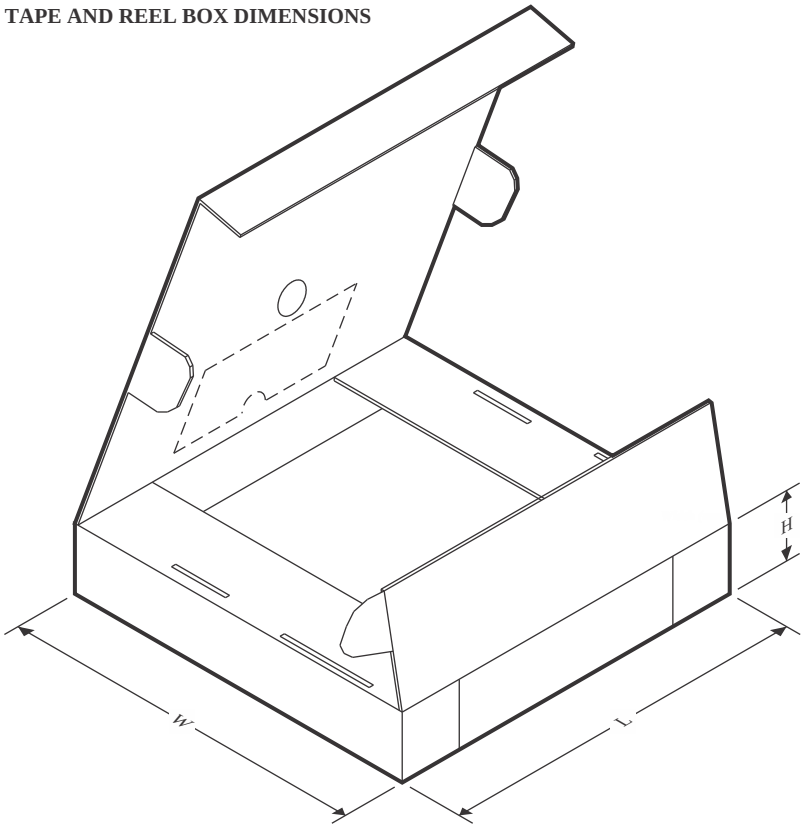

*All dimensions are nominal

Device	Package Type	Package Drawing	Pins	SPQ	Length (mm)	Width (mm)	Height (mm)
SN74HCT14DBR	SSOP	DB	14	2000	356.0	356.0	35.0
SN74HCT14DGVR	TVSOP	DGV	14	2000	356.0	356.0	35.0
SN74HCT14DR	SOIC	D	14	2500	366.0	364.0	50.0
SN74HCT14DR	SOIC	D	14	2500	340.5	336.1	32.0
SN74HCT14DRG3	SOIC	D	14	2500	364.0	364.0	27.0
SN74HCT14DRG4	SOIC	D	14	2500	356.0	356.0	35.0
SN74HCT14PWR	TSSOP	PW	14	2000	356.0	356.0	35.0
SN74HCT14PWRG4	TSSOP	PW	14	2000	356.0	356.0	35.0

TUBE

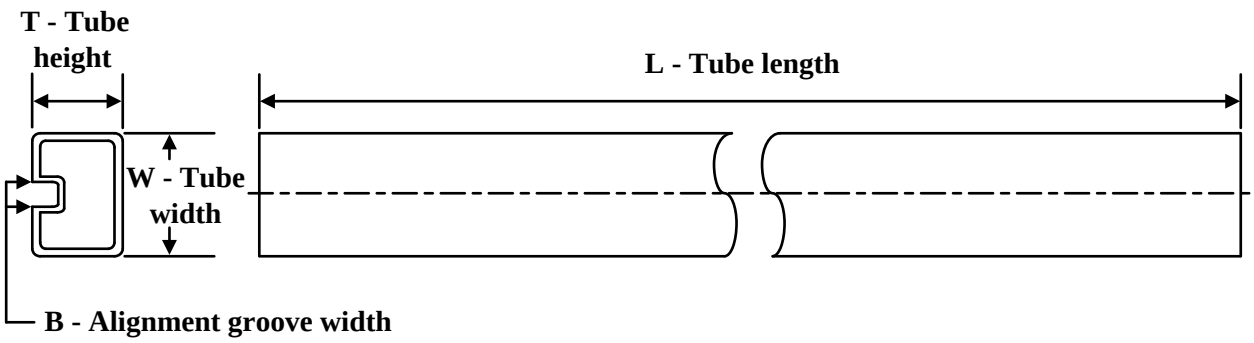

*All dimensions are nominal

Device	Package Name	Package Type	Pins	SPQ	L (mm)	W (mm)	T (µm)	B (mm)
5962-86890012A	FK	LCCC	20	55	506.98	12.06	2030	NA
5962-8689001DA	W	CFP	14	25	506.98	26.16	6220	NA
SN74HCT14N	N	PDIP	14	25	506	13.97	11230	4.32
SN74HCT14N	N	PDIP	14	25	506	13.97	11230	4.32
SN74HCT14N.A	N	PDIP	14	25	506	13.97	11230	4.32
SN74HCT14N.A	N	PDIP	14	25	506	13.97	11230	4.32
SN74HCT14NE4	N	PDIP	14	25	506	13.97	11230	4.32
SN74HCT14NE4	N	PDIP	14	25	506	13.97	11230	4.32
SNJ54HCT14FK	FK	LCCC	20	55	506.98	12.06	2030	NA
SNJ54HCT14FK.A	FK	LCCC	20	55	506.98	12.06	2030	NA
SNJ54HCT14W	W	CFP	14	25	506.98	26.16	6220	NA
SNJ54HCT14W.A	W	CFP	14	25	506.98	26.16	6220	NA

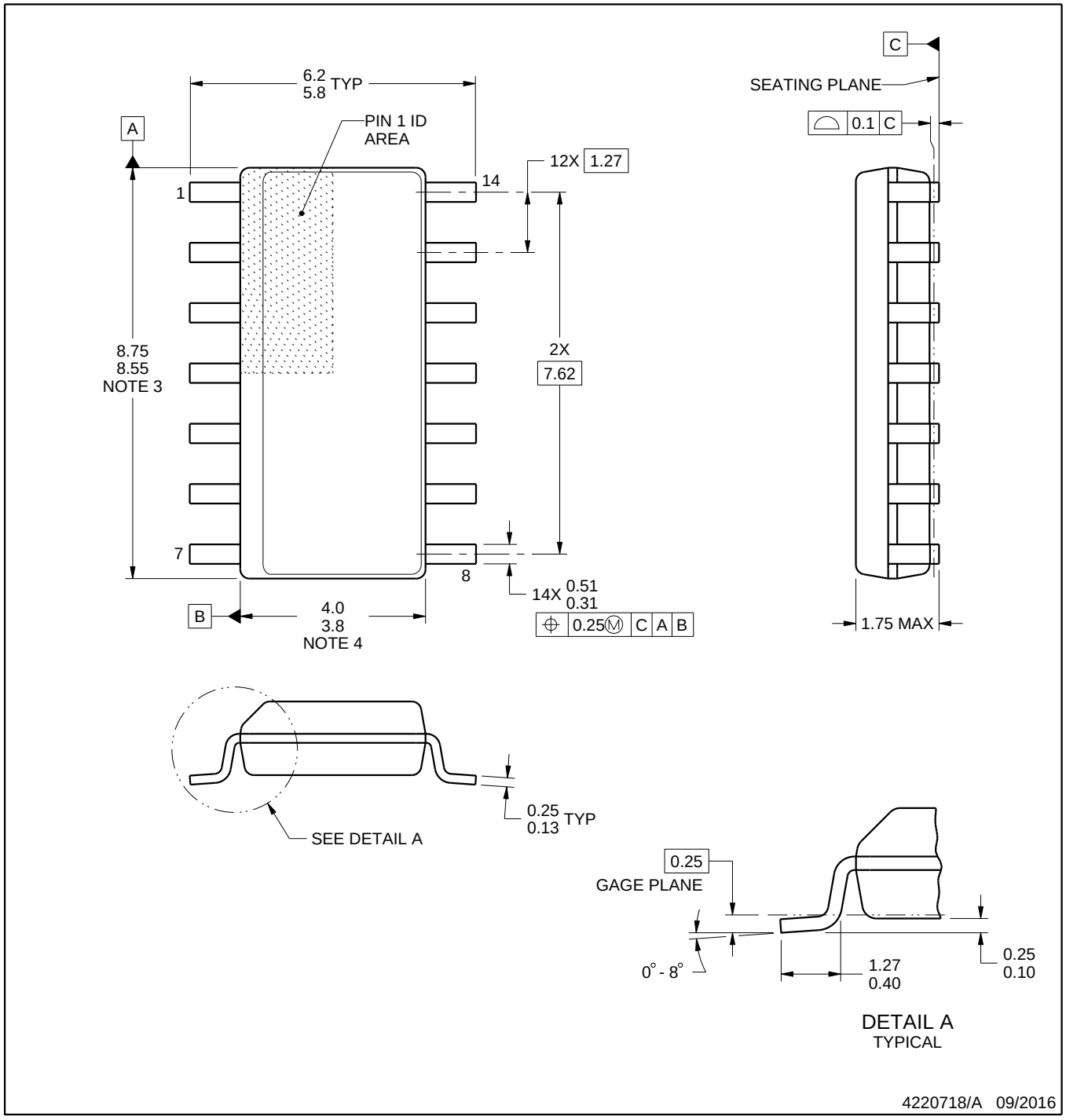

NOTES:

1. All linear dimensions are in millimeters. Dimensions in parenthesis are for reference only. Dimensioning and tolerancing per ASME Y14.5M.
2. This drawing is subject to change without notice.
3. This dimension does not include mold flash, protrusions, or gate burrs. Mold flash, protrusions, or gate burrs shall not exceed 0.15 mm, per side.
4. This dimension does not include interlead flash. Interlead flash shall not exceed 0.43 mm, per side.
5. Reference JEDEC registration MS-012, variation AB.

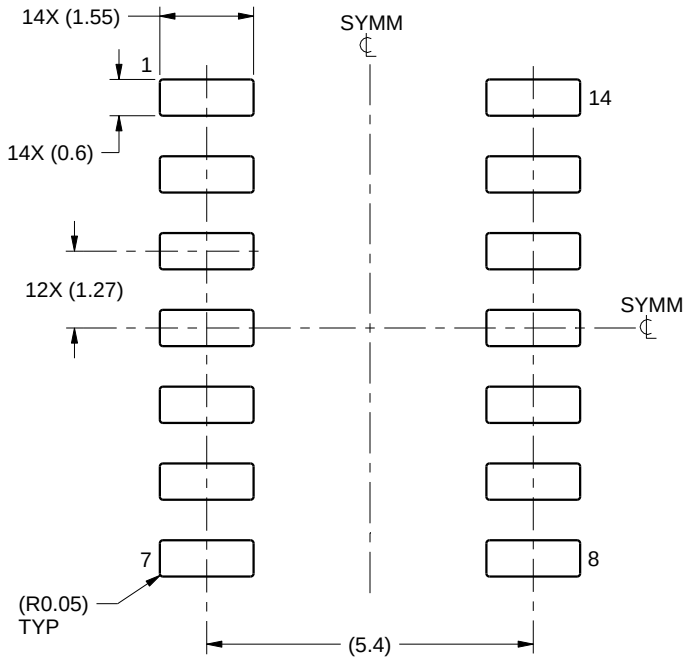

LAND PATTERN EXAMPLE
SCALE:8X

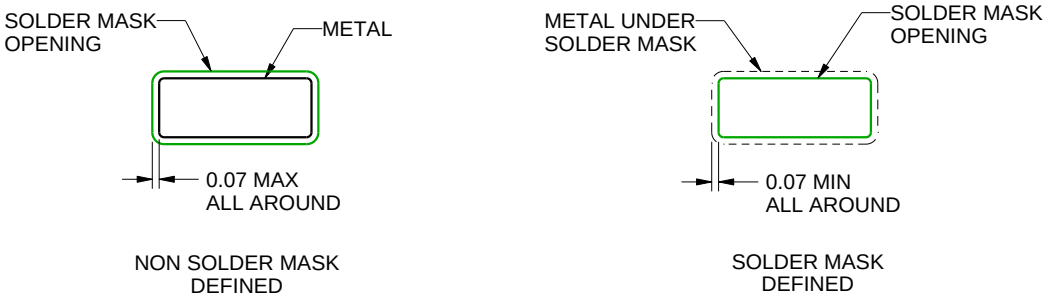

SOLDER MASK DETAILS

4220718/A 09/2016

NOTES: (continued)

6. Publication IPC-7351 may have alternate designs.
7. Solder mask tolerances between and around signal pads can vary based on board fabrication site.

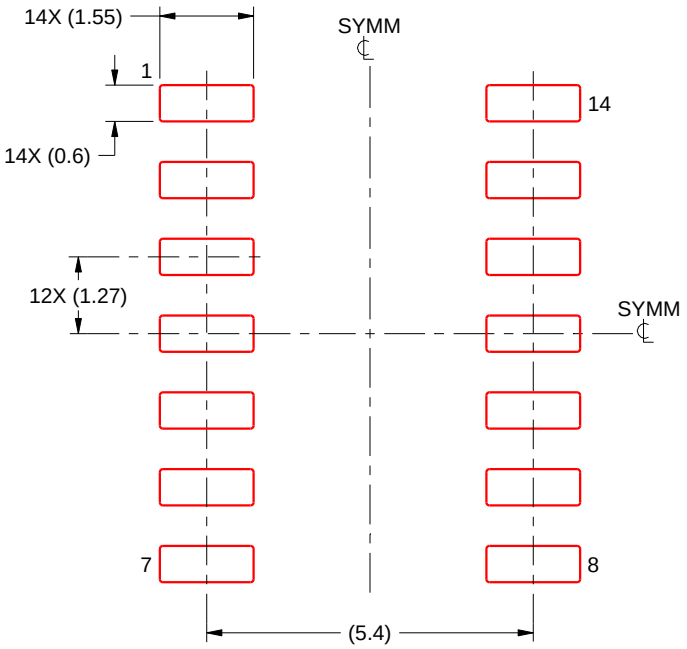

SOLDER PASTE EXAMPLE
BASED ON 0.125 mm THICK STENCIL
SCALE:8X

4220718/A 09/2016

NOTES: (continued)

8. Laser cutting apertures with trapezoidal walls and rounded corners may offer better paste release. IPC-7525 may have alternate design recommendations.
9. Board assembly site may have different recommendations for stencil design.

W (R–GDFP–F14) CERAMIC DUAL FLATPACK

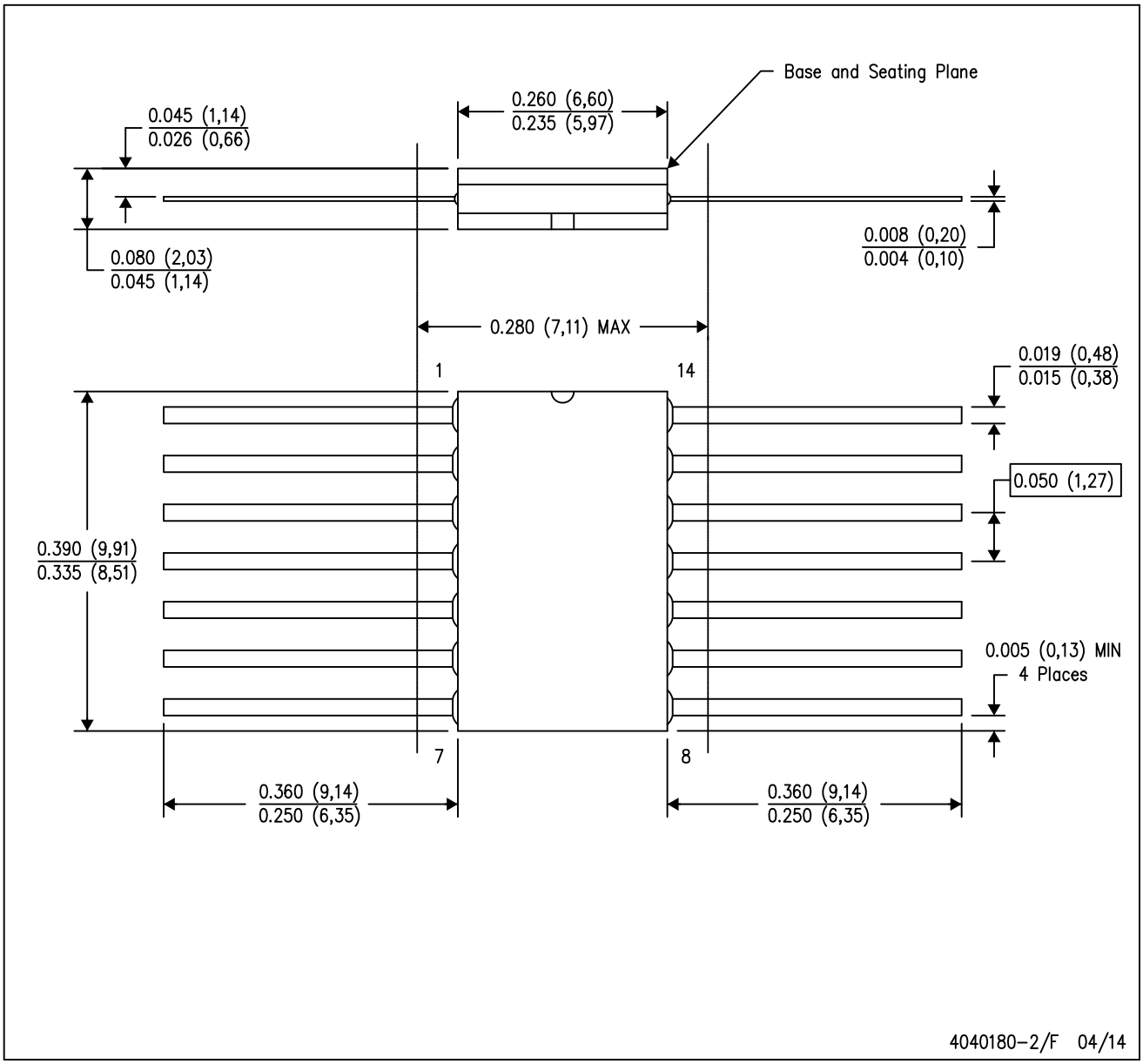

NOTES:
A. All linear dimensions are in inches (millimeters).
B. This drawing is subject to change without notice.
C. This package can be hermetically sealed with a ceramic lid using glass frit.
D. Index point is provided on cap for terminal identification only.
E. Falls within MIL STD 1835 GDFP1–F14

DGV (R-PDSO-G)** **PLASTIC SMALL-OUTLINE**

24 PINS SHOWN

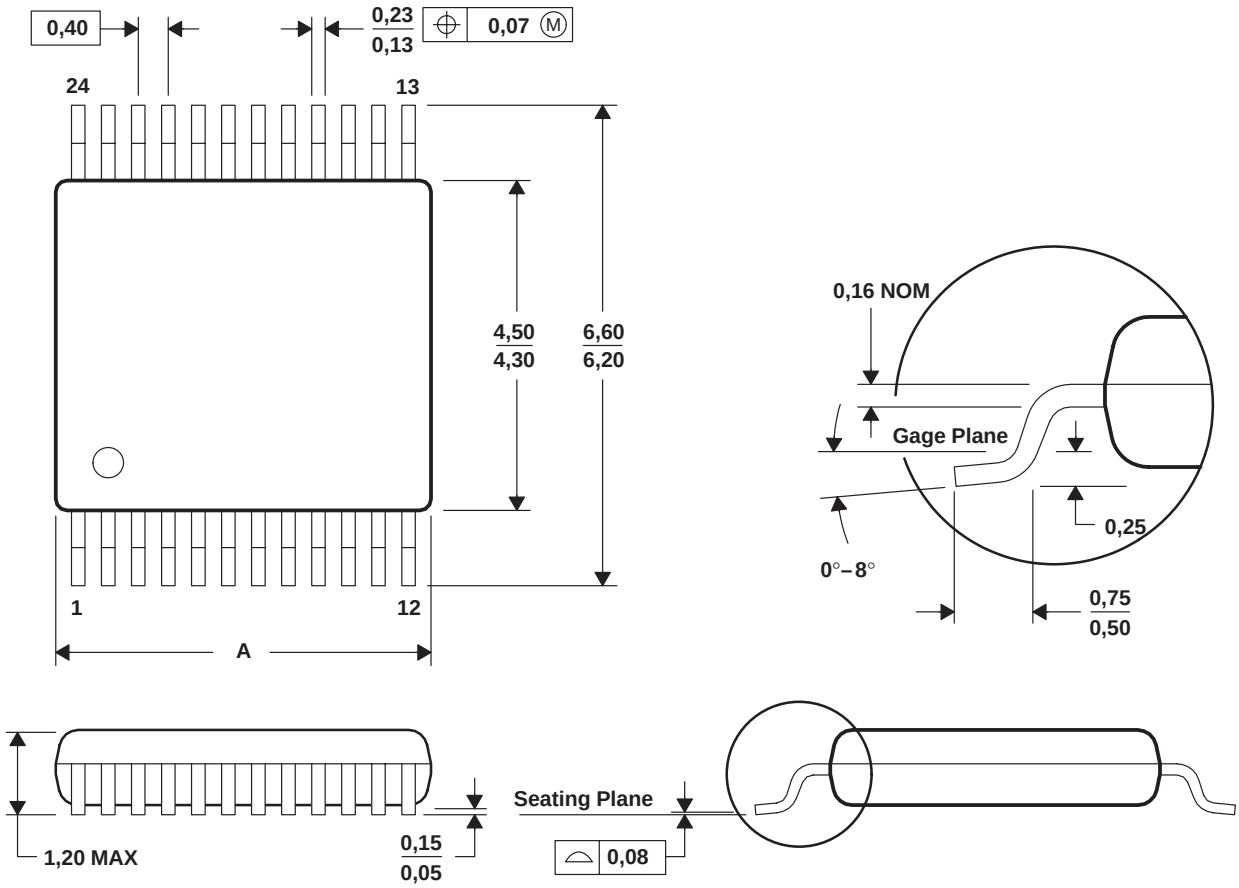

DIM \ PINS **	14	16	20	24	38	48	56
A MAX	3,70	3,70	5,10	5,10	7,90	9,80	11,40
A MIN	3,50	3,50	4,90	4,90	7,70	9,60	11,20

4073251/E 08/00

NOTES: A. All linear dimensions are in millimeters.
B. This drawing is subject to change without notice.
C. Body dimensions do not include mold flash or protrusion, not to exceed 0,15 per side.
D. Falls within JEDEC: 24/48 Pins – MO-153
14/16/20/56 Pins – MO-194

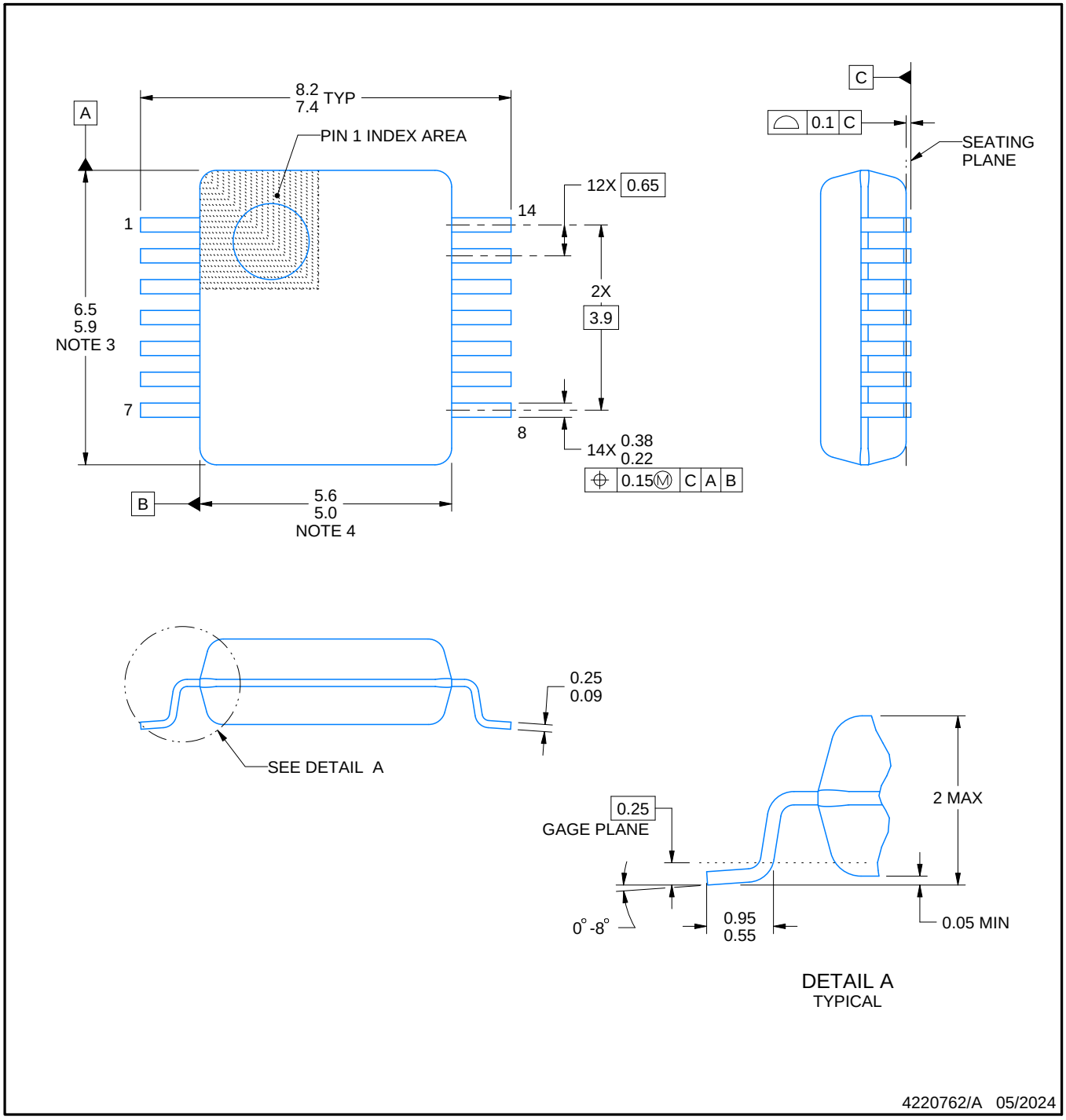

NOTES:

1. All linear dimensions are in millimeters. Any dimensions in parenthesis are for reference only. Dimensioning and tolerancing per ASME Y14.5M.
2. This drawing is subject to change without notice.
3. This dimension does not include mold flash, protrusions, or gate burrs. Mold flash, protrusions, or gate burrs shall not exceed 0.15 mm per side.
4. Reference JEDEC registration MO-150.

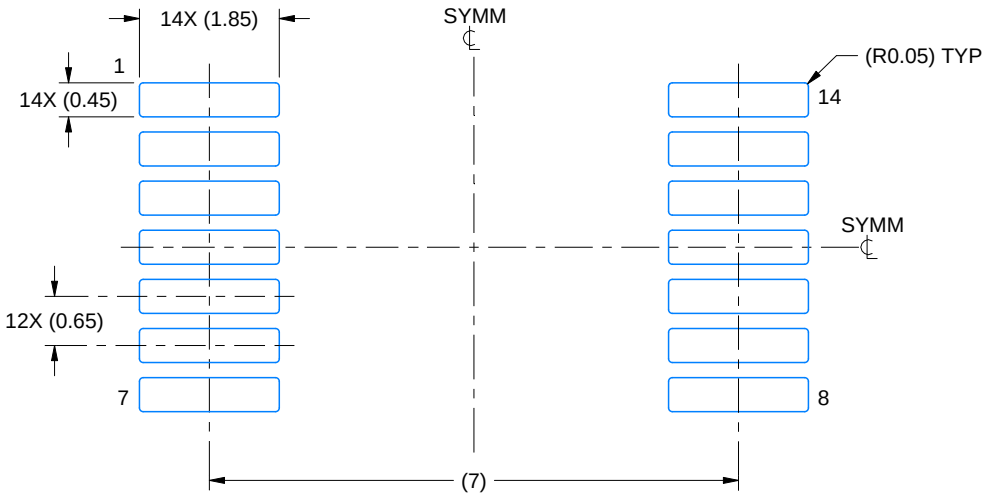

LAND PATTERN EXAMPLE
EXPOSED METAL SHOWN
SCALE: 10X

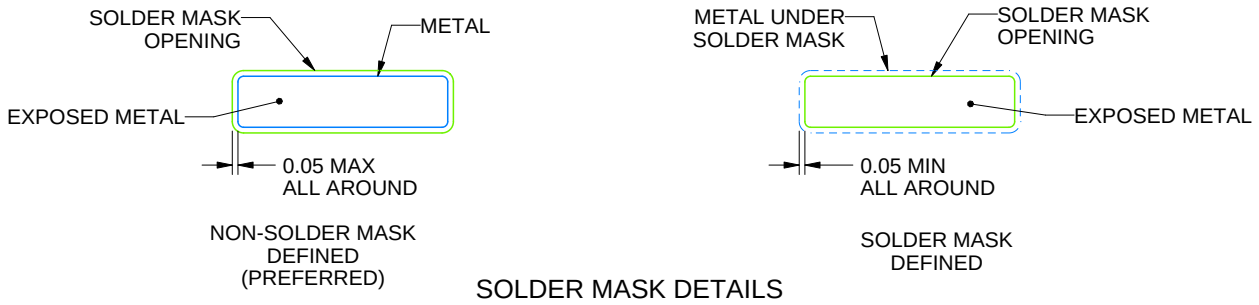

SOLDER MASK DETAILS

4220762/A 05/2024

NOTES: (continued)

5. Publication IPC-7351 may have alternate designs.
6. Solder mask tolerances between and around signal pads can vary based on board fabrication site.

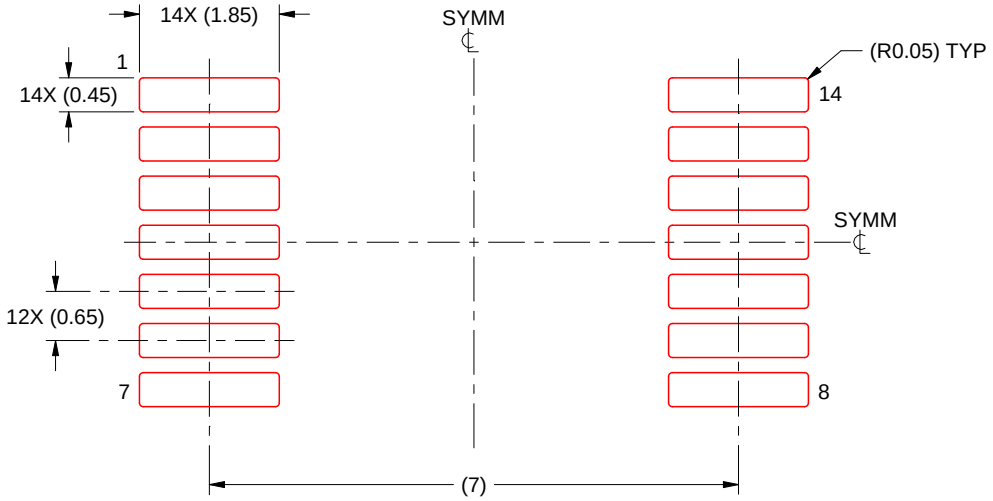

SOLDER PASTE EXAMPLE
BASED ON 0.125 mm THICK STENCIL
SCALE: 10X

4220762/A 05/2024

NOTES: (continued)

7. Laser cutting apertures with trapezoidal walls and rounded corners may offer better paste release. IPC-7525 may have alternate design recommendations.
8. Board assembly site may have different recommendations for stencil design.

GENERIC PACKAGE VIEW

FK 20

LCCC - 2.03 mm max height

8.89 x 8.89, 1.27 mm pitch

LEADLESS CERAMIC CHIP CARRIER

This image is a representation of the package family, actual package may vary.
Refer to the product data sheet for package details.

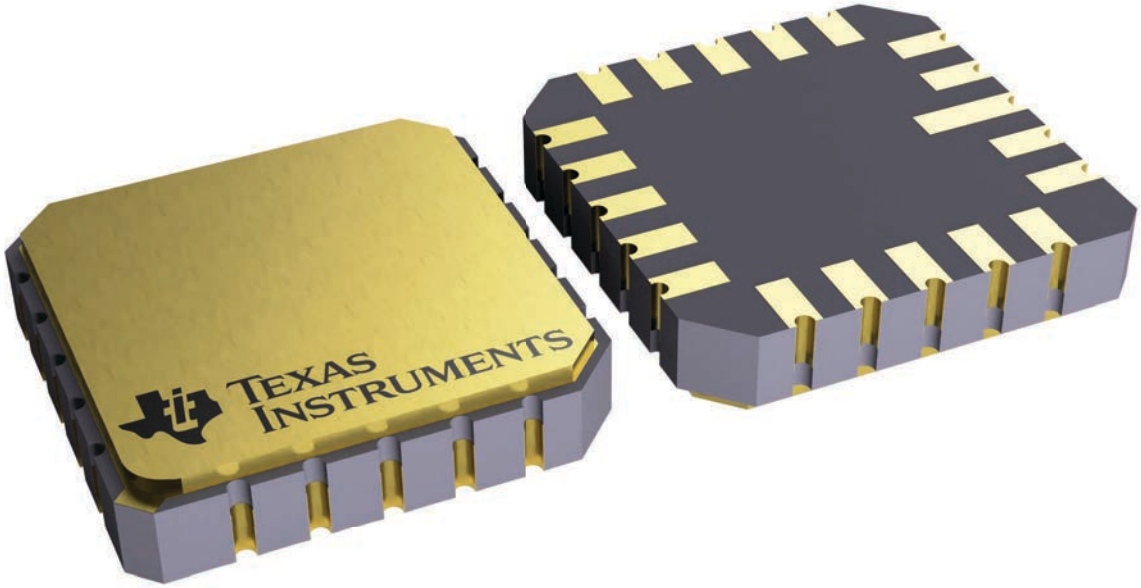

4229370VA\

J 14 CDIP - 5.08 mm max height

CERAMIC DUAL IN LINE PACKAGE

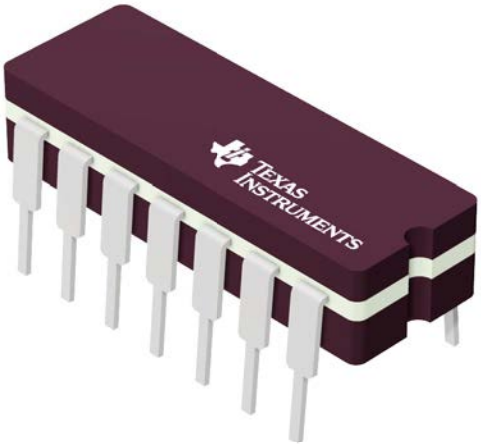

Images above are just a representation of the package family, actual package may vary.
Refer to the product data sheet for package details.

4040083-5/G

PACKAGE OUTLINE

J0014A

CDIP - 5.08 mm max height

CERAMIC DUAL IN LINE PACKAGE

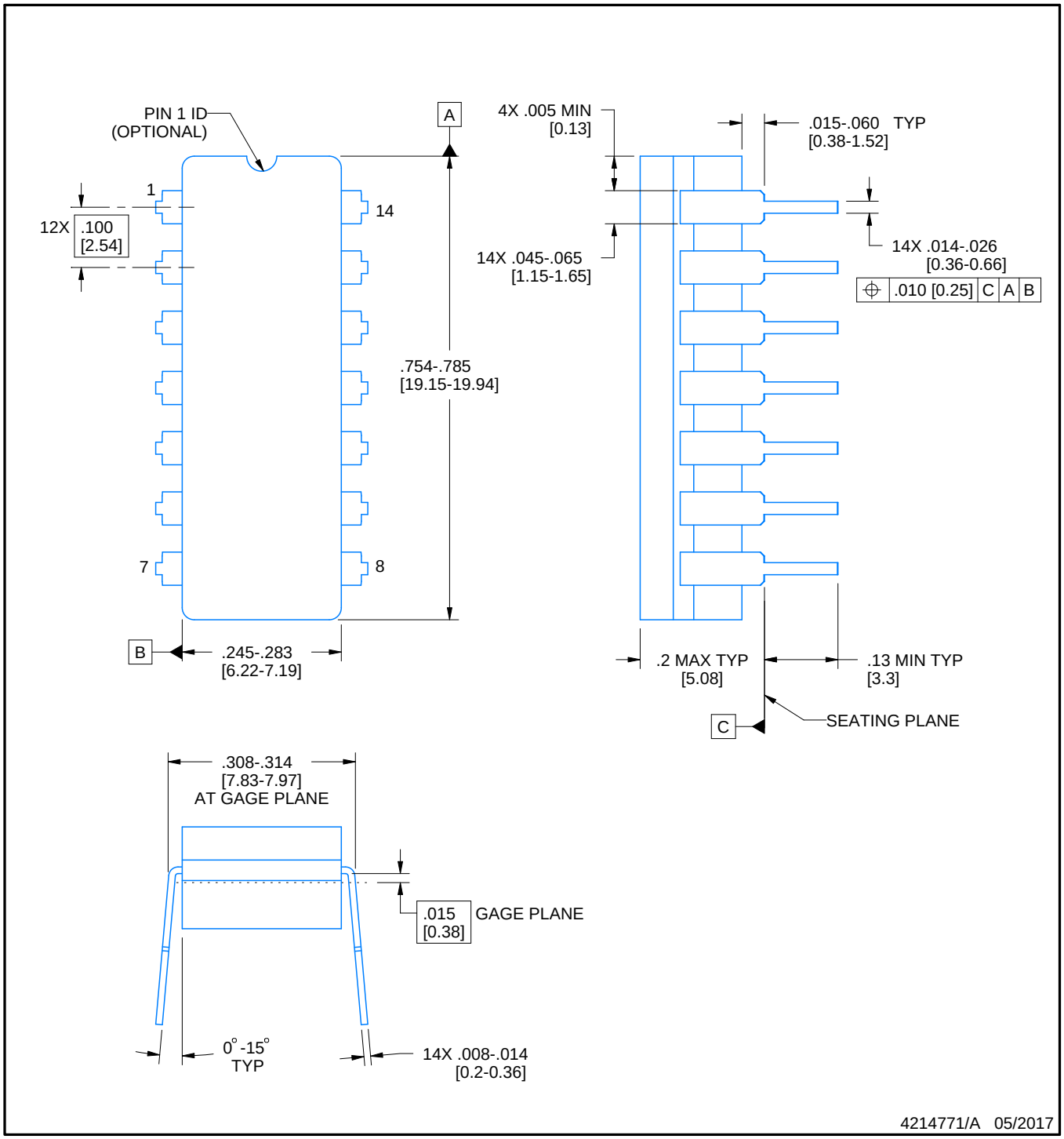

NOTES:

1. All controlling linear dimensions are in inches. Dimensions in brackets are in millimeters. Any dimension in brackets or parenthesis are for reference only. Dimensioning and tolerancing per ASME Y14.5M.
2. This drawing is subject to change without notice.
3. This package is hermitically sealed with a ceramic lid using glass frit.
4. Index point is provided on cap for terminal identification only and on press ceramic glass frit seal only.
5. Falls within MIL-STD-1835 and GDIP1-T14.

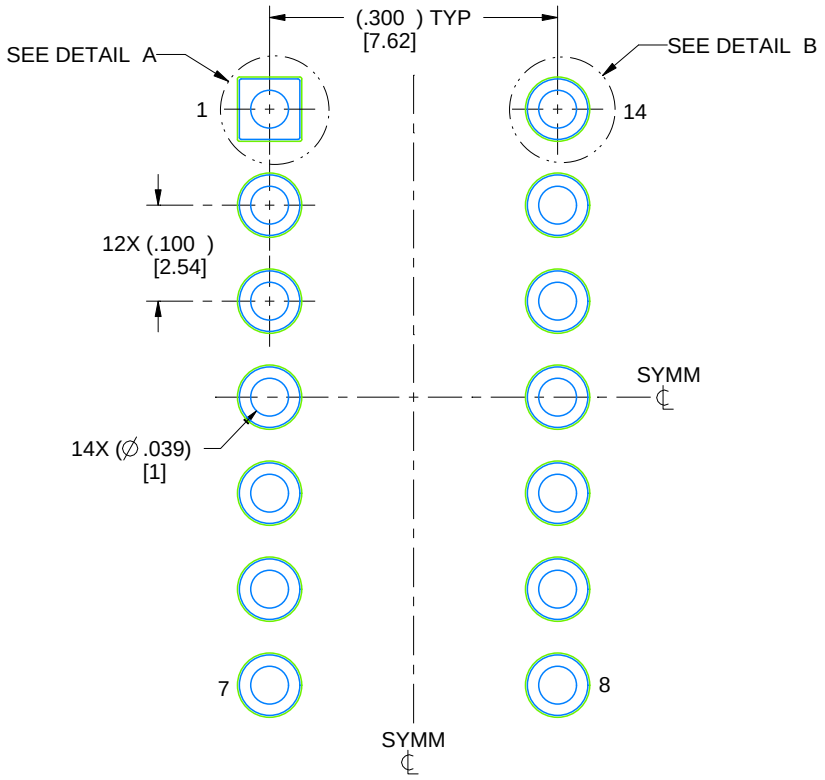

LAND PATTERN EXAMPLE
NON-SOLDER MASK DEFINED
SCALE: 5X

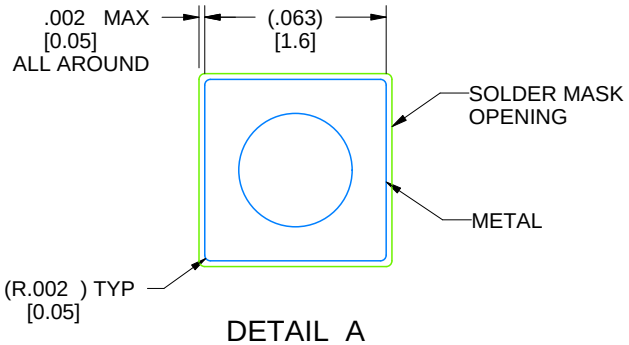

DETAIL A
SCALE: 15X

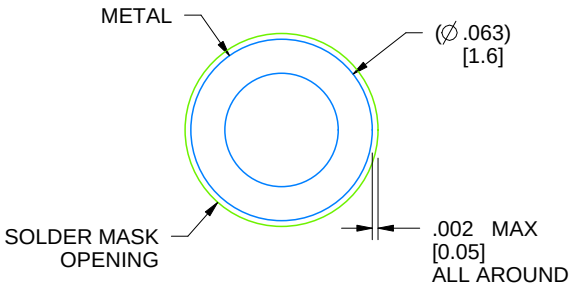

DETAIL B
13X, SCALE: 15X

4214771/A 05/2017

N (R–PDIP–T**) PLASTIC DUAL–IN–LINE PACKAGE

16 PINS SHOWN

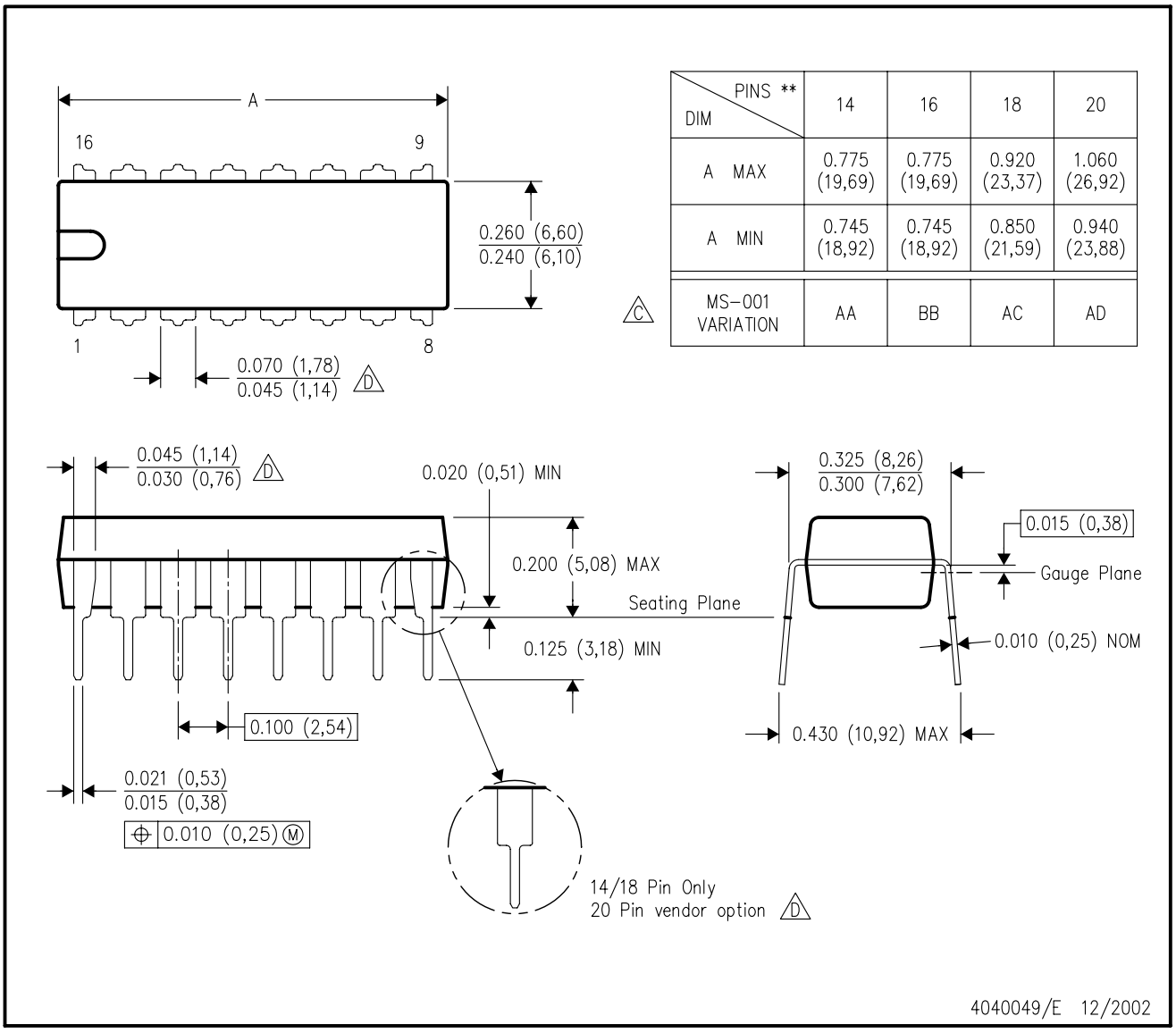

DIM \ PINS **	14	16	18	20
A MAX	0.775 (19,69)	0.775 (19,69)	0.920 (23,37)	1.060 (26,92)
A MIN	0.745 (18,92)	0.745 (18,92)	0.850 (21,59)	0.940 (23,88)
MS–001 VARIATION (C)	AA	BB	AC	AD

NOTES:
A. All linear dimensions are in inches (millimeters).
B. This drawing is subject to change without notice.
C. Falls within JEDEC MS–001, except 18 and 20 pin minimum body length (Dim A).
D. The 20 pin end lead shoulder width is a vendor option, either half or full width.

PW0014A

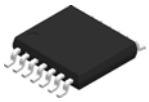

PACKAGE OUTLINE

TSSOP - 1.2 mm max height

SMALL OUTLINE PACKAGE

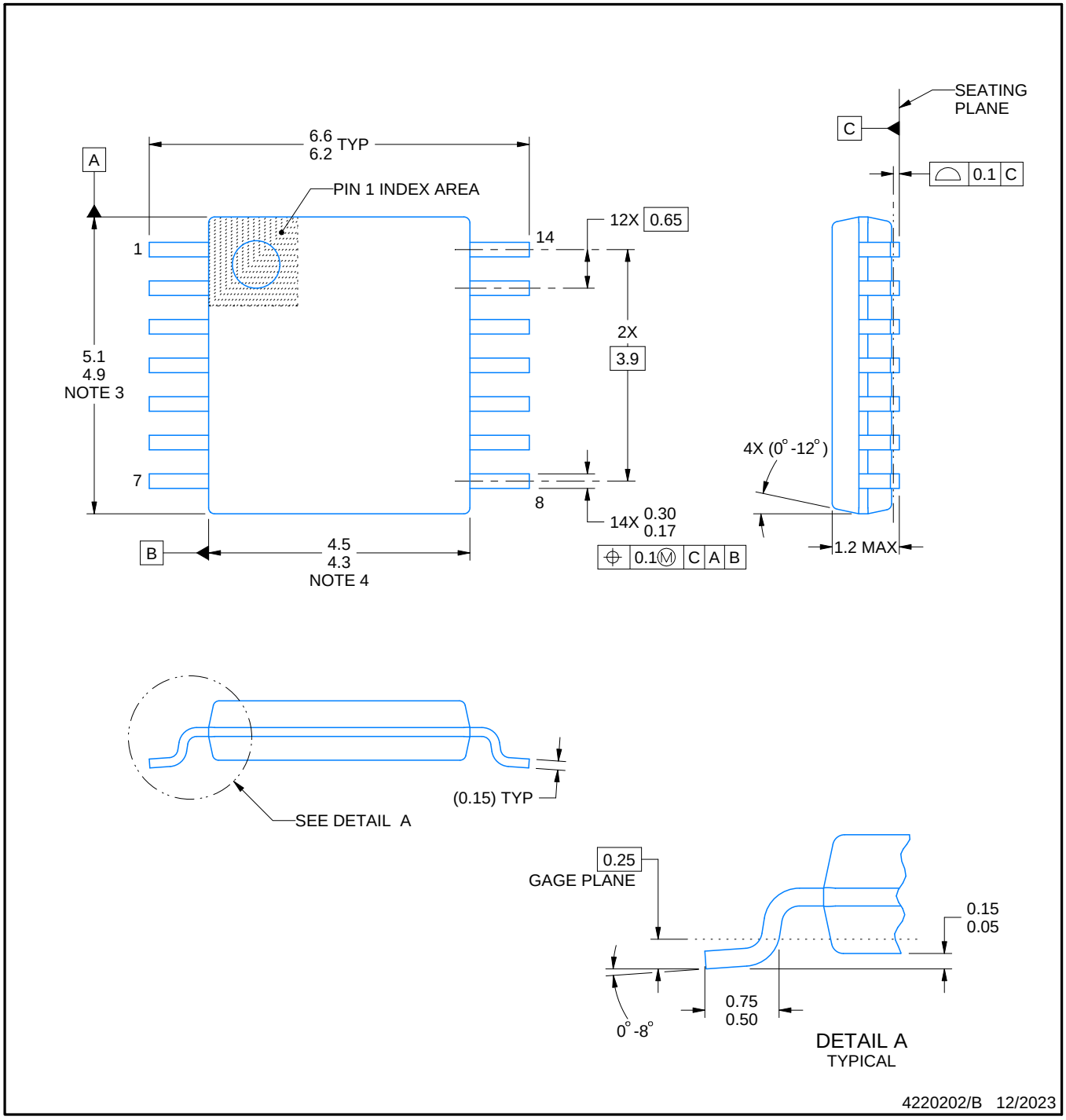

NOTES:

1. All linear dimensions are in millimeters. Any dimensions in parenthesis are for reference only. Dimensioning and tolerancing per ASME Y14.5M.
2. This drawing is subject to change without notice.
3. This dimension does not include mold flash, protrusions, or gate burrs. Mold flash, protrusions, or gate burrs shall not exceed 0.15 mm per side.
4. This dimension does not include interlead flash. Interlead flash shall not exceed 0.25 mm per side.
5. Reference JEDEC registration MO-153.

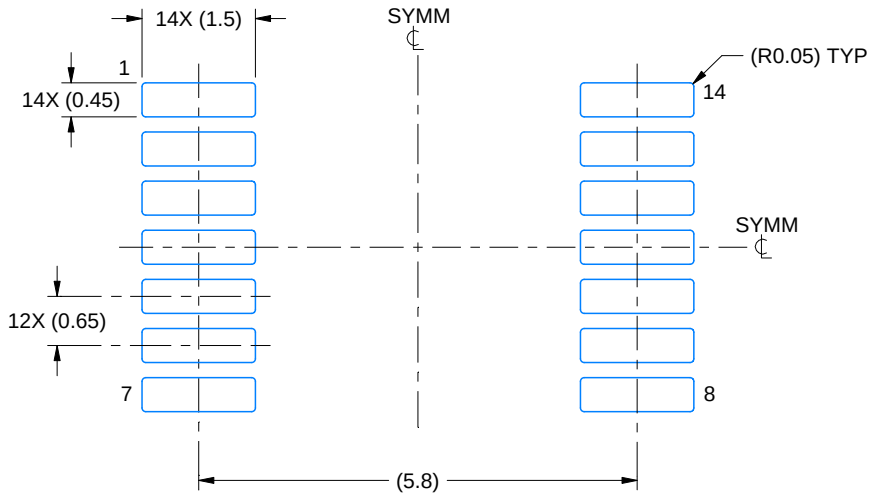

LAND PATTERN EXAMPLE
EXPOSED METAL SHOWN
SCALE: 10X

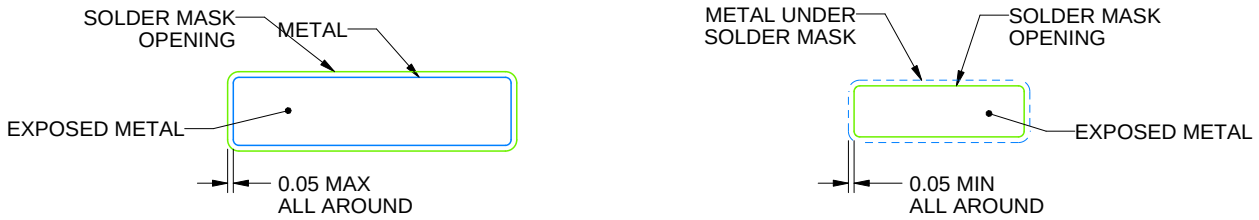

NON-SOLDER MASK DEFINED (PREFERRED)

SOLDER MASK DEFINED

SOLDER MASK DETAILS

4220202/B 12/2023

NOTES: (continued)

6. Publication IPC-7351 may have alternate designs.
7. Solder mask tolerances between and around signal pads can vary based on board fabrication site.

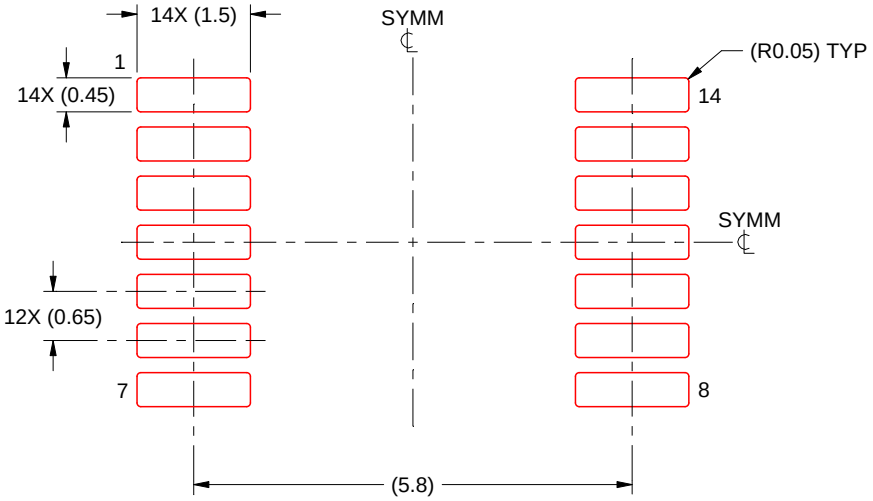

SOLDER PASTE EXAMPLE
BASED ON 0.125 mm THICK STENCIL
SCALE: 10X

4220202/B 12/2023

NOTES: (continued)

8. Laser cutting apertures with trapezoidal walls and rounded corners may offer better paste release. IPC-7525 may have alternate design recommendations.
9. Board assembly site may have different recommendations for stencil design.

IMPORTANT NOTICE AND DISCLAIMER

TI PROVIDES TECHNICAL AND RELIABILITY DATA (INCLUDING DATA SHEETS), DESIGN RESOURCES (INCLUDING REFERENCE DESIGNS), APPLICATION OR OTHER DESIGN ADVICE, WEB TOOLS, SAFETY INFORMATION, AND OTHER RESOURCES “AS IS” AND WITH ALL FAULTS, AND DISCLAIMS ALL WARRANTIES, EXPRESS AND IMPLIED, INCLUDING WITHOUT LIMITATION ANY IMPLIED WARRANTIES OF MERCHANTABILITY, FITNESS FOR A PARTICULAR PURPOSE OR NON-INFRINGEMENT OF THIRD PARTY INTELLECTUAL PROPERTY RIGHTS.

These resources are intended for skilled developers designing with TI products. You are solely responsible for (1) selecting the appropriate TI products for your application, (2) designing, validating and testing your application, and (3) ensuring your application meets applicable standards, and any other safety, security, regulatory or other requirements.

These resources are subject to change without notice. TI grants you permission to use these resources only for development of an application that uses the TI products described in the resource. Other reproduction and display of these resources is prohibited. No license is granted to any other TI intellectual property right or to any third party intellectual property right. TI disclaims responsibility for, and you will fully indemnify TI and its representatives against, any claims, damages, costs, losses, and liabilities arising out of your use of these resources.

TI’s products are provided subject to TI’s Terms of Sale or other applicable terms available either on ti.com or provided in conjunction with such TI products. TI’s provision of these resources does not expand or otherwise alter TI’s applicable warranties or warranty disclaimers for TI products.

TI objects to and rejects any additional or different terms you may have proposed.

Mailing Address: Texas Instruments, Post Office Box 655303, Dallas, Texas 75265
Copyright © 2025, Texas Instruments Incorporated