CDx4HC374 High-Speed CMOS Logic Octal D-Type Flip-Flop, 3-State Positive-Edge Triggered

1 Features

- Buffered inputs
- Common three-state output enable control
- Three-state outputs
- Bus line driving capability
- Typical propagation delay (clock to Q) = 15 ns at V_{CC} = 5 V, C_L = 15 pF, T_A = 25°C
- Fanout (over temperature range)
  - Standard outputs: 10 LSTTL loads
  - Bus driver outputs: 15 LSTTL loads
- Wide operating temperature range: –55°C to 125°C
- Balanced propagation delay and transition times
- Significant power reduction compared to LSTTL Logic ICs
- HC types
  - 2-V to 6-V operation
  - High noise immunity: N_{IL} = 30%, N_{IH} = 30% of V_{CC} at V_{CC} = 5 V
- HCT types
  - 4.5-V to 5.5-V Operation
  - Direct LSTTL input logic compatibility, V_{IL} = 0.8 V (max), V_{IH} = 2 V (min)
  - CMOS input compatibility, $I_I \leq 1\mu A$ at V_{OL}, V_{OH}

2 Description

The ’HC374, ’HCT374, ’HC574, and ’HCT574 are octal D-type flip-flops with 3-state outputs and the capability to drive 15 LSTTL loads. The eight edge-triggered flip-flops enter data into their registers on the LOW to HIGH transition of clock (CP). The output enable ($\overline{OE}$) controls the 3-state outputs and is independent of the register operation. When $\overline{OE}$ is HIGH, the outputs are in the high-impedance state. The 374 and 574 are identical in function and differ only in their pinout arrangements.

Device Information

PART NUMBER	PACKAGE[1]	BODY SIZE (NOM)
CD54HC374F3A	CDIP (20)	26.92 mm × 6.92 mm
CD54HC574F	CDIP (20)	26.92 mm × 6.92 mm
CD54HCT374F3A	CDIP (20)	26.92 mm × 6.92 mm
CD54HCT574F	CDIP (20)	26.92 mm × 6.92 mm
CD74HC374M	SOIC (20)	12.80 mm × 7.50 mm
CD74HC574M	SOIC (20)	12.80 mm × 7.50 mm
CD74HCT374M	SOIC (20)	12.80 mm × 7.50 mm
CD74HCT574M	SOIC (20)	12.80 mm × 7.50 mm
CD74HC374E	PDIP (20)	25.40 mm × 6.35 mm
CD74HC574E	PDIP (20)	25.40 mm × 6.35 mm
CD74HCT374E	PDIP (20)	25.40 mm × 6.35 mm
CD74HCT574E	PDIP (20)	25.40 mm × 6.35 mm
CD74HCT574PWR	TSSOP (20)	6.50 mm × 4.40 mm

(1) For all available packages, see the orderable addendum at the end of the data sheet.

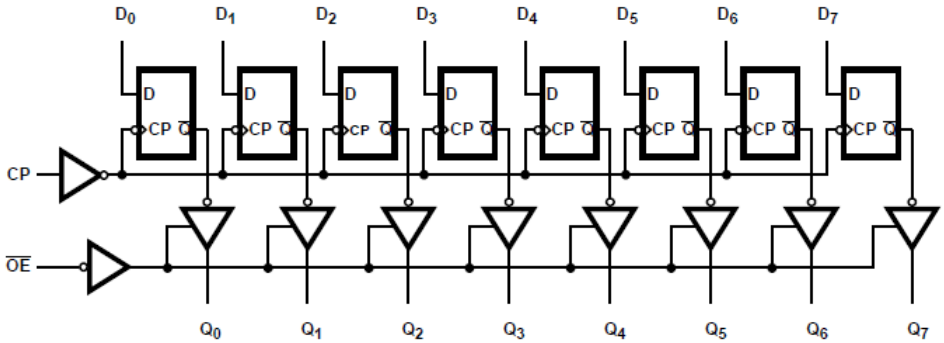

Functional Diagram

An IMPORTANT NOTICE at the end of this data sheet addresses availability, warranty, changes, use in safety-critical applications, intellectual property matters and other important disclaimers. PRODUCTION DATA.

Table of Contents

1 Features....1
2 Description....1
3 Revision History....2
4 Pin Configuration and Functions....3
5 Specifications....4
5.1 Absolute Maximum Ratings....4
5.2 Recommended Operating Conditions....4
5.3 Thermal Information....4
5.4 Electrical Characteristics....5
5.5 Prerequisite for Switching Characteristics....6
5.6 Switching Characteristics....7
6 Parameter Measurement Information....8
7 Detailed Description....10
7.1 Overview....10
7.2 Functional Block Diagram....10
7.3 Device Functional Modes....10
8 Power Supply Recommendations....11
9 Layout....11
9.1 Layout Guidelines....11
10 Device and Documentation Support....12
10.1 Receiving Notification of Documentation Updates....12
10.2 Support Resources....12
10.3 Trademarks....12
10.4 Electrostatic Discharge Caution....12
10.5 Glossary....12
11 Mechanical, Packaging, and Orderable Information....12

3 Revision History

NOTE: Page numbers for previous revisions may differ from page numbers in the current version.

Changes from Revision D (January 2022) to Revision E (October 2022)	Page
• Increased RθJA for packages: DW (58 to 109.1); N (69 to 84.6); PW (83 to 131.8)	4

Changes from Revision C (May 2004) to Revision D (January 2022)	Page
• Updated the numbering, formatting, tables, figures, and cross-refrences throughout the document to reflect modern data sheet standards	1

Copyright © 2022 Texas Instruments Incorporated

4 Pin Configuration and Functions

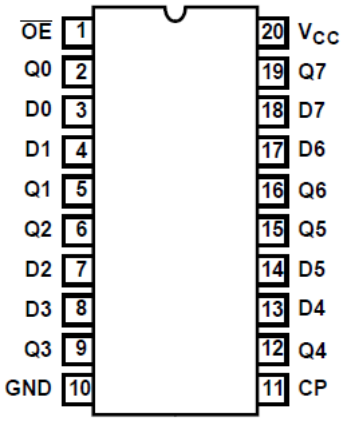

HC(T) 374
J, DW, or N package
20-Pin CDIP, SOIC, or PDIP
Top View

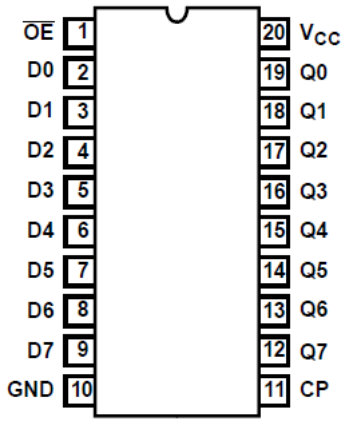

HC(T) 574
J, DW, N, or PW package
20-Pin CDIP, SOIC, PDIP, or TSSOP
Top View

5 Specifications

5.1 Absolute Maximum Ratings

over operating free-air temperature range (unless otherwise noted)[1]

			MIN	MAX	UNIT
V_{CC}	Supply voltage		– 0.5	7	V
I_{IK}	Input diode current	For $V_I < –0.5$ V or $V_I > V_{CC} + 0.5$ V		±20	mA
I_{OK}	Output diode current	For $V_O < –0.5$ V or $V_O > V_{CC} + 0.5$ V		±20	mA
I_O	Drain current, per output	For $–0.5 V < V_O < V_{CC} + 0.5$ V		±35	mA
I_O	Output source or sink current per output pin	For $V_O > –0.5$ V or $V_O < V_{CC} + 0.5$ V		±25	mA
	Continuous current through V_{CC} or ground current			±50	mA
T_J	Junction temperature			150	°C
T_{stg}	Storage temperature range		– 65	150	°C
	Lead temperature (Soldering 10s) (SOIC - Lead Tips Only)			300	°C

(1) Stresses beyond those listed under *absolute maximum ratings* may cause permanent damage to the device. These are stress ratings only and functional operation of the device at these or any other conditions beyond those indicated under *recommended operating conditions* is not implied. Exposure to absolute-maximum-rated conditions for extended periods may affect device reliability.

5.2 Recommended Operating Conditions

			MIN	MAX	UNIT
V_{CC}	Supply voltage range	HC types	2	6	V
		HCT types	4.5	5.5	
V_I, V_O	DC input or output voltage		0	V_{CC}	V
	Input rise and fall time	2 V		1000	ns
		4.5 V		500	
		6 V		400	
T_A	Temperature range		–55	125	℃

5.3 Thermal Information

THERMAL METRIC		DW (SOIC) 20 PINS	N (PDIP) 20 PINS	PW (TSSOP) 20 PINS	UNIT
$R_{\theta JA}$	Junction-to-ambient thermal resistance[1]	109.1	84.6	131.8	°C/W
$R_{\theta JC(top)}$	Junction-to-case (top) thermal resistance	76	72.5	72.2	°C/W
$R_{\theta JB}$	Junction-to-board thermal resistance	77.6	65.3	82.8	°C/W
ψ_{JT}	Junction-to-top characterization parameter	51.5	55.3	21.5	°C/W
ψ_{JB}	Junction-to-board characterization parameter	77.1	65.2	82.4	°C/W
$R_{\theta JC(bot)}$	Junction-to-case (bottom) thermal resistance	N/A	N/A	N/A	°C/W

(1) For more information about traditional and new thermal metrics, see the Semiconductor and IC package thermal metrics application report.

Copyright © 2022 Texas Instruments Incorporated

5.4 Electrical Characteristics

PARAMETER		TEST CONDITIONS[2]	V_{CC} (V)	25°C			–40°C to 85°C		–55°C to 125°C		UNIT
				MIN	TYP	MAX	MIN	MAX	MIN	MAX	
HC TYPES											
V_{IH}	High level input voltage		2	1.5			1.5		1.5		V
			4.5	3.15			3.15		3.15		
			6	4.2			4.2		4.2		
V_{IL}	Low level input voltage		2			0.5		0.5		0.5	V
			4.5			1.35		1.35		1.35	
			6			1.8		1.8		1.8	
V_{OH}	High level output voltage CMOS loads	I_{OH} = – 20 µA	2	1.9			1.9		1.9		V
		I_{OH} = – 20 µA	4.5	4.4			4.4		4.4		
		I_{OH} = – 20 µA	6	5.9			5.9		5.9		
	High level output voltage TTL loads	I_{OH} = – 6 mA	4.5	3.98			3.84		3.7		V
		I_{OH} = –7.8 mA	6	5.48			5.34		5.2		
V_{OL}	Low level output voltage CMOS loads	I_{OL} = 20 µA	2			0.1		0.1		0.1	V
		I_{OL} = 20 µA	4.5			0.1		0.1		0.1	
		I_{OL} = 20 µA	6			0.1		0.1		0.1	
	Low level output voltage TTL loads	I_{OL} = 6 mA	4.5			0.26		0.33		0.4	V
		I_{OL} = 7.8 mA	6			0.26		0.33		0.4	
I_I	Input leakage current	V_I = V_{CC} or GND	6			±0.1		±1		±1	µA
I_{CC}	Quiescent device current	V_I = V_{CC} or GND	6			8		80		160	µA
V_{IL} or V_{IH}	Three-state leakage current	V_O = V_{CC}or GND	6			±0.5		±5.0		±10	µA
HCT TYPES											
V_{IH}	High level input voltage		4.5 to 5.5	2			2		2		V
V_{IL}	Low level input voltage		4.5 to 5.5			0.8		0.8		0.8	V
V_{OH}	High level output voltage CMOS loads	I_{OH} = – 20 µA	4.5	4.4			4.4		4.4		V
	High level output voltage TTL loads	I_{OH} = – 6 mA	4.5	3.98			3.84		3.7		
V_{OL}	Low level output voltage CMOS loads	I_{OL} = 20 µA	4.5			0.1		0.1		0.1	V
	Low level output voltage TTL loads	I_{OL} = 6 mA	4.5			0.26		0.33		0.4	
I_I	Input leakage current	V_I = V_{CC} or GND	5.5			±0.1		±1		±1	µA
I_{CC}	Quiescent device current	V_I = V_{CC} or GND	5.5			8		80		160	µA
V_{IL} or V_{IH}	Three-state leakage current	V_O = V_{CC}or GND	6			±0.5		±5.0		±10	µA

Copyright © 2022 Texas Instruments Incorporated

5.4 Electrical Characteristics (continued)

PARAMETER		TEST CONDITIONS[2]	V_{CC} (V)	25°C			–40°C to 85°C		–55°C to 125°C		UNIT
				MIN	TYP	MAX	MIN	MAX	MIN	MAX	
ΔI_{CC} [1]	HCT374 Additional quiescent device current per input pin	D0 - D7 inputs held at V_{CC} – 2.1	4.5 to 5.5		100	108		135		147	µA
		CP input held at V_{CC} – 2.1	4.5 to 5.5		100	324		405		441	µA
		$\overline{OE}$ input held at V_{CC} – 2.1	4.5 to 5.5		100	468		585		637	µA
	HCT574 Additional quiescent device current per input pin	D0 - D7 inputs held at V_{CC} – 2.1	4.5 to 5.5		100	144		180		196	µA
		CP input held at V_{CC} – 2.1	4.5 to 5.5		100	270		337.5		367.5	µA
		$\overline{OE}$ input held at V_{CC} – 2.1	4.5 to 5.5		100	216		270		294	µA

(1) For dual-supply systems, theoretical worst case (V_I = 2.4 V, V_{CC} = 5.5 V) specificationis 1.8mA.
(2) $V_I = V_{IH}$ or V_{IL}, unless otherwise noted.

5.5 Prerequisite for Switching Characteristics

PARAMETER		V_{CC} (V)	25°C			–40°C to 85°C			–55°C to 125°C			UNIT
			MIN	TYP	MAX	MIN	TYP	MAX	MIN	TYP	MAX	
HC TYPES												
f_{MAX}	Maximum clock frequency	2	6			5			4			MHz
		4.5	30			25			20			
		6	35			29			23			
t_W	Clock pulse width	2	80			100			120			ns
		4.5	16			20			24			
		6	14			17			20			
t_{SU}	Setup time data to clock	2	60			75			90			ns
		4.5	12			15			18			
		6	10			13			15			
t_H	Hold time data to clock	2	5			5			5			ns
		4.5	5			5			5			
		6	5			5			5			
HCT TYPES												
f_{MAX}	Maximum clock frequency	4.5	30			25			20			MHz
t_W	Clock pulse width	4.5	16			20			24			ns
t_{SU}	Setup time data to clock	4.5	12			15			18			ns
t_H	Hold time data to clock	4.5	5			5			5			ns

Copyright © 2022 Texas Instruments Incorporated

5.6 Switching Characteristics

C_L = 50 pF, Input t_r, t_f = 6 ns

PARAMETER		TEST CONDITIONS	V_{CC} (V)	25°C			–40°C to 85°C		–55°C to 125°C		UNIT
				MIN	TYP	MAX	MIN	MAX	MIN	MAX	
HC TYPES											
t_{PLH}, t_{PHL}	Propagation delay Clock to output	C_L = 50 pF	2			165		205		250	ns
			4.5			33		41		50	
		C_L = 15 pF	5		15						ns
		C_L = 50 pF	6			28		35		43	
t_{PLZ}, t_{PHZ}	Output disable to Q	C_L = 50 pF	2			135		170		205	ns
			4.5			27		34		41	
		C_L = 15 pF	5		11						ns
		C_L = 50 pF	6			23		29		35	
t_{PZL}, t_{PZH}	Output enable to Q	C_L = 50 pF	2			150		190		225	ns
			4.5			30		38		45	
		C_L = 15 pF	5		12						ns
		C_L = 50 pF	6			26		33		38	
f_{MAX}	Maximum clock frequency	C_L = 15 pF	5		60						MHz
t_{THL}, t_{TLH}	Output transition time	C_L = 50 pF	2			60		75		90	ns
			4.5			12		15		18	
			6			10		13		15	
C_I	Input capacitance	C_L = 50 pF		10		10		10		10	pF
C_O	Three-state output capacitance			20		20		20		20	pF
C_{PD}	Power dissipation capacitance(1) (2)	C_L = 15 pF	5		39						pF
HCT TYPES											
t_{PHL}, t_{PLH}	Propagation delay Clock to output	C_L = 50 pF	4.5			33		41		50	ns
		C_L = 15 pF	5		15						
t_{PLZ}, t_{PHZ}	Output disable to Q	C_L = 50pF	4.5			28		35		42	ns
		C_L = 15 pF	5		11						
t_{PZL}, t_{PZH}	Output enable to Q	C_L = 50 pF	4.5			30		38		45	ns
		C_L = 15 pF	5		12						
f_{MAX}	Maximum clock frequency	C_L = 15 pF	5		60						MHz
t_{TLH}, t_{THL}	Output transition time	C_L = 50 pF	4.5			12		15		18	ns
C_I	Input capacitance	C_L = 50 pF		10		10		10		10	pF
C_O	Three-state output capacitance			20		20		20		20	pF
C_{PD}	Power dissipation capacitance(1) (2)	C_L = 15 pF	5		47						pF

(1) C_{PD} is used to determine the dynamic power consumption, per package.
(2) $P_D = C_{PD} V_{CC}{}^2 f_i + \Sigma V_{CC}{}^2 f_O C_L$ where f_i = input frequency, f_O = output frequency, C_L = output load capacitance, V_{CC} = supply voltage.

6 Parameter Measurement Information

Phase relationships between waveforms were chosen arbitrarily. All input pulses are supplied by generators having the following characteristics: PRR ≤ 1 MHz, Z_O = 50 Ω, t_t < 6 ns.

For clock inputs, f_{max} is measured when the input duty cycle is 50%.

The outputs are measured one at a time with one input transition per measurement.

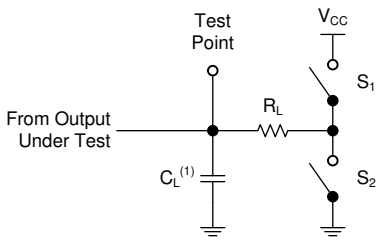

(1) C_L includes probe and test-fixture capacitance.

Figure 6-1. Load Circuit for 3-State Outputs

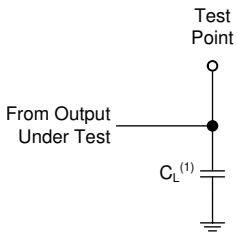

(1) C_L includes probe and test-fixture capacitance.

Figure 6-2. Load Circuit for Push-Pull Outputs

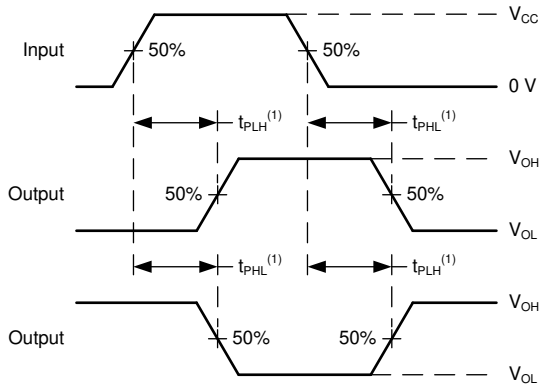

(1) The greater between t_{PLH} and t_{PHL} is the same as t_{pd}.

Figure 6-3. Voltage Waveforms, Propagation Delays for Standard CMOS Inputs

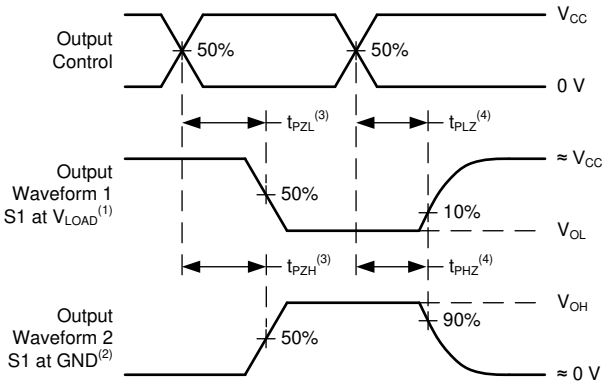

(1) S1 = CLOSED; S2 = OPEN.
(2) S1 = OPEN; s2 = CLOSED.
(3) t_{PLZ} and t_{PHZ} are the same as t_{dis}.
(4) t_{PZL} and t_{PZH} are the same as t_{en}.

Figure 6-4. Voltage Waveforms, Standard CMOS Inputs Propagation Delays

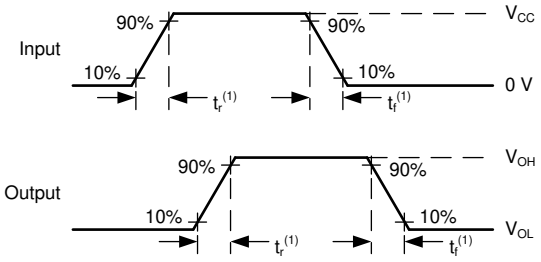

(1) The greater between t_r and t_f is the same as t_t.

Figure 6-5. Voltage Waveforms, Input and Output Transition Times for Standard CMOS Inputs

Copyright © 2022 Texas Instruments Incorporated

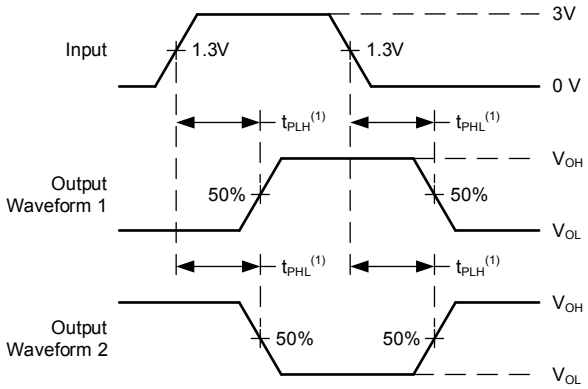

(1) The greater between t_{PLH} and t_{PHL} is the same as t_{pd}.

Figure 6-6. Voltage Waveforms, Propagation Delays for TTL-Compatible Inputs

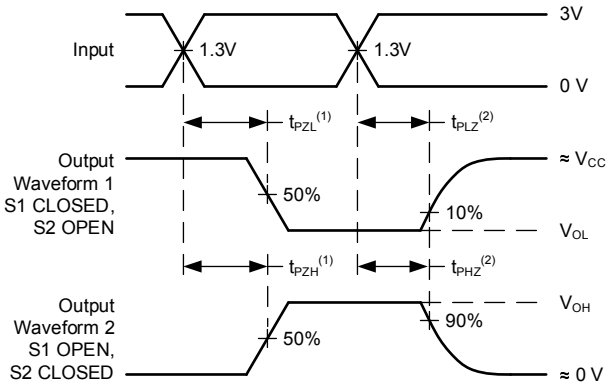

(1) t_{PLZ} and t_{PHZ} are the same as t_{dis}.

(2) t_{PZL} and t_{PZH} are the same as t_{en}.

Figure 6-7. Voltage Waveforms, TTL-Compatible CMOS Inputs Propagation Delays

7 Detailed Description

7.1 Overview

The ’HC374, ’HCT374, ’HC574, and ’HCT574 are octal D-type flip-flops with 3-state outputs and the capability to drive 15 LSTTL loads. The eight edge-triggered flip-flops enter data into their registers on the LOW to HIGH transition of clock (CP). The output enable ($\overline{OE}$) controls the 3-state outputs and is independent of the register operation. When $\overline{OE}$ is HIGH, the outputs are in the high-impedance state. The 374 and 574 are identical in function and differ only in their pinout arrangements.

7.2 Functional Block Diagram

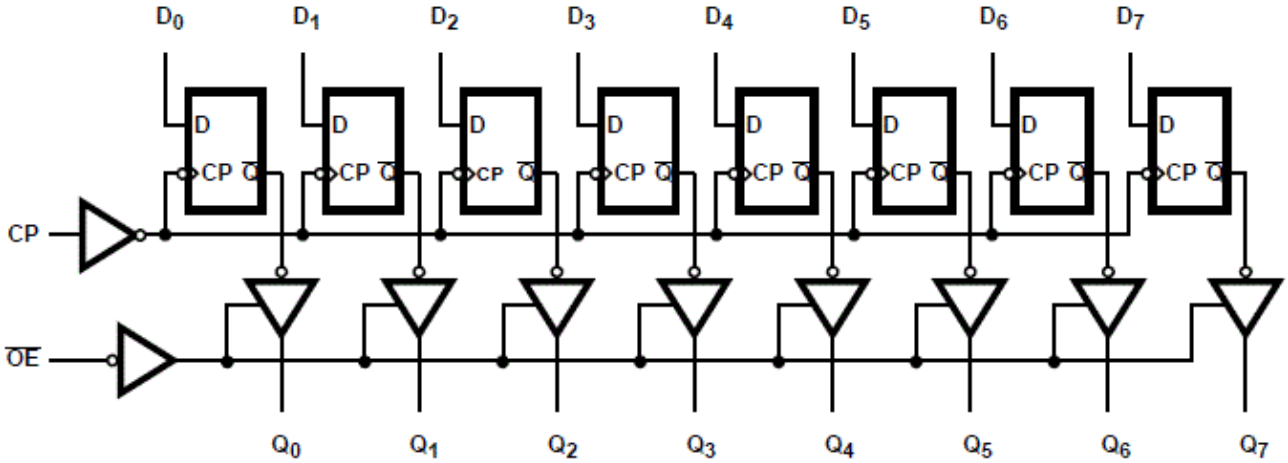

7.3 Device Functional Modes

Table 7-1. Truth Table[(1)]

INPUTS			OUTPUT
$\overline{OE}$	CP	Dn	Qn
L	↑	H	H
L	↑	L	L
L	L	X	Q0
H	X	X	Z

(1) H = high level (steady state), L = low level (steady state), X = don’t care, ↑ = transition from low to high level, Q0 = the level of Q before the indicated steady-state input conditions were established, Z= high impedance state

Copyright © 2022 Texas Instruments Incorporated

8 Power Supply Recommendations

The power supply can be any voltage between the minimum and maximum supply voltage rating located in the *Recommended Operating Conditions*. Each V_{CC} terminal should have a good bypass capacitor to prevent power disturbance. A 0.1-µF capacitor is recommended for this device. It is acceptable to parallel multiple bypass capacitors to reject different frequencies of noise. The 0.1-µF and 1-µF capacitors are commonly used in parallel. The bypass capacitor should be installed as close to the power terminal as possible for best results.

9 Layout

9.1 Layout Guidelines

When using multiple-input and multiple-channel logic devices, inputs must not ever be left floating. In many cases, functions or parts of functions of digital logic devices are unused; for example, when only two inputs of a triple-input AND gate are used or only 3 of the 4 buffer gates are used. Such unused input pins must not be left unconnected because the undefined voltages at the outside connections result in undefined operational states. All unused inputs of digital logic devices must be connected to a logic high or logic low voltage, as defined by the input voltage specifications, to prevent them from floating. The logic level that must be applied to any particular unused input depends on the function of the device. Generally, the inputs are tied to GND or V_{CC}, whichever makes more sense for the logic function or is more convenient.

Copyright © 2022 Texas Instruments Incorporated

10 Device and Documentation Support

TI offers an extensive line of development tools. Tools and software to evaluate the performance of the device, generate code, and develop solutions are listed below.

10.1 Receiving Notification of Documentation Updates

To receive notification of documentation updates, navigate to the device product folder on ti.com. Click on *Subscribe to updates* to register and receive a weekly digest of any product information that has changed. For change details, review the revision history included in any revised document.

10.2 Support Resources

TI E2E™ support forums are an engineer's go-to source for fast, verified answers and design help — straight from the experts. Search existing answers or ask your own question to get the quick design help you need.

Linked content is provided "AS IS" by the respective contributors. They do not constitute TI specifications and do not necessarily reflect TI's views; see TI's Terms of Use.

10.3 Trademarks

TI E2E™ is a trademark of Texas Instruments.
All trademarks are the property of their respective owners.

10.4 Electrostatic Discharge Caution

This integrated circuit can be damaged by ESD. Texas Instruments recommends that all integrated circuits be handled with appropriate precautions. Failure to observe proper handling and installation procedures can cause damage.

ESD damage can range from subtle performance degradation to complete device failure. Precision integrated circuits may be more susceptible to damage because very small parametric changes could cause the device not to meet its published specifications.

10.5 Glossary

TI Glossary	This glossary lists and explains terms, acronyms, and definitions.

11 Mechanical, Packaging, and Orderable Information

The following pages include mechanical, packaging, and orderable information. This information is the most current data available for the designated devices. This data is subject to change without notice and revision of this document. For browser-based versions of this data sheet, refer to the left-hand navigation.

Copyright © 2022 Texas Instruments Incorporated

PACKAGING INFORMATION

Orderable part number	Status (1)	Material type (2)	Package | Pins	Package qty | Carrier	RoHS (3)	Lead finish/ Ball material (4)	MSL rating/ Peak reflow (5)	Op temp (°C)	Part marking (6)
5962-8974201RA	Active	Production	CDIP (J) | 20	20 | TUBE	No	SNPB	N/A for Pkg Type	-55 to 125	5962-8974201RA CD54HCT574F3A
CD54HC374F3A	Active	Production	CDIP (J) | 20	20 | TUBE	No	SNPB	N/A for Pkg Type	-55 to 125	8407101RA CD54HC374F3A
CD54HC374F3A.A	Active	Production	CDIP (J) | 20	20 | TUBE	No	SNPB	N/A for Pkg Type	-55 to 125	8407101RA CD54HC374F3A
CD54HC574F	Active	Production	CDIP (J) | 20	20 | TUBE	No	SNPB	N/A for Pkg Type	-55 to 125	CD54HC574F
CD54HC574F.A	Active	Production	CDIP (J) | 20	20 | TUBE	No	SNPB	N/A for Pkg Type	-55 to 125	CD54HC574F
CD54HC574F3A	Active	Production	CDIP (J) | 20	20 | TUBE	No	SNPB	N/A for Pkg Type	-55 to 125	CD54HC574F3A
CD54HC574F3A.A	Active	Production	CDIP (J) | 20	20 | TUBE	No	SNPB	N/A for Pkg Type	-55 to 125	CD54HC574F3A
CD54HCT374F3A	Active	Production	CDIP (J) | 20	20 | TUBE	No	SNPB	N/A for Pkg Type	-55 to 125	8550701RA CD54HCT374F3A
CD54HCT374F3A.A	Active	Production	CDIP (J) | 20	20 | TUBE	No	SNPB	N/A for Pkg Type	-55 to 125	8550701RA CD54HCT374F3A
CD54HCT574F	Active	Production	CDIP (J) | 20	20 | TUBE	No	SNPB	N/A for Pkg Type	-55 to 125	CD54HCT574F
CD54HCT574F.A	Active	Production	CDIP (J) | 20	20 | TUBE	No	SNPB	N/A for Pkg Type	-55 to 125	CD54HCT574F
CD54HCT574F3A	Active	Production	CDIP (J) | 20	20 | TUBE	No	SNPB	N/A for Pkg Type	-55 to 125	5962-8974201RA CD54HCT574F3A
CD54HCT574F3A.A	Active	Production	CDIP (J) | 20	20 | TUBE	No	SNPB	N/A for Pkg Type	-55 to 125	5962-8974201RA CD54HCT574F3A
CD74HC374E	Active	Production	PDIP (N) | 20	20 | TUBE	Yes	NIPDAU | NIPDAU	N/A for Pkg Type	-55 to 125	CD74HC374E
CD74HC374E.A	Active	Production	PDIP (N) | 20	20 | TUBE	Yes	NIPDAU	N/A for Pkg Type	-55 to 125	CD74HC374E
CD74HC374M	Obsolete	Production	SOIC (DW) | 20	-	-	Call TI	Call TI	-55 to 125	HC374M
CD74HC374M96	Active	Production	SOIC (DW) | 20	2000 | LARGE T&R	Yes	NIPDAU	Level-1-260C-UNLIM	-55 to 125	HC374M
CD74HC374M96.A	Active	Production	SOIC (DW) | 20	2000 | LARGE T&R	Yes	NIPDAU	Level-1-260C-UNLIM	-55 to 125	HC374M
CD74HC374M96E4	Active	Production	SOIC (DW) | 20	2000 | LARGE T&R	Yes	NIPDAU	Level-1-260C-UNLIM	-55 to 125	HC374M
CD74HC574E	Active	Production	PDIP (N) | 20	20 | TUBE	Yes	NIPDAU	N/A for Pkg Type	-55 to 125	CD74HC574E
CD74HC574E.A	Active	Production	PDIP (N) | 20	20 | TUBE	Yes	NIPDAU	N/A for Pkg Type	-55 to 125	CD74HC574E
CD74HC574M	Obsolete	Production	SOIC (DW) | 20	-	-	Call TI	Call TI	-55 to 125	HC574M
CD74HC574M96	Active	Production	SOIC (DW) | 20	2000 | LARGE T&R	Yes	NIPDAU	Level-1-260C-UNLIM	-55 to 125	HC574M
CD74HC574M96.A	Active	Production	SOIC (DW) | 20	2000 | LARGE T&R	Yes	NIPDAU	Level-1-260C-UNLIM	-55 to 125	HC574M

Orderable part number	Status (1)	Material type (2)	Package | Pins	Package qty | Carrier	RoHS (3)	Lead finish/ Ball material (4)	MSL rating/ Peak reflow (5)	Op temp (°C)	Part marking (6)
CD74HCT374E	Active	Production	PDIP (N) | 20	20 | TUBE	Yes	NIPDAU | NIPDAU	N/A for Pkg Type	-55 to 125	CD74HCT374E
CD74HCT374E.A	Active	Production	PDIP (N) | 20	20 | TUBE	Yes	NIPDAU	N/A for Pkg Type	-55 to 125	CD74HCT374E
CD74HCT374EE4	Active	Production	PDIP (N) | 20	20 | TUBE	Yes	NIPDAU	N/A for Pkg Type	-55 to 125	CD74HCT374E
CD74HCT374M	Obsolete	Production	SOIC (DW) | 20	-	-	Call TI	Call TI	-55 to 125	HCT374M
CD74HCT374M96	Active	Production	SOIC (DW) | 20	2000 | LARGE T&R	Yes	NIPDAU	Level-1-260C-UNLIM	-55 to 125	HCT374M
CD74HCT374M96.A	Active	Production	SOIC (DW) | 20	2000 | LARGE T&R	Yes	NIPDAU	Level-1-260C-UNLIM	-55 to 125	HCT374M
CD74HCT574E	Active	Production	PDIP (N) | 20	20 | TUBE	Yes	NIPDAU	N/A for Pkg Type	-55 to 125	CD74HCT574E
CD74HCT574E.A	Active	Production	PDIP (N) | 20	20 | TUBE	Yes	NIPDAU	N/A for Pkg Type	-55 to 125	CD74HCT574E
CD74HCT574M	Obsolete	Production	SOIC (DW) | 20	-	-	Call TI	Call TI	-55 to 125	HCT574M
CD74HCT574M96	Active	Production	SOIC (DW) | 20	2000 | LARGE T&R	Yes	NIPDAU	Level-1-260C-UNLIM	-55 to 125	HCT574M
CD74HCT574M96.A	Active	Production	SOIC (DW) | 20	2000 | LARGE T&R	Yes	NIPDAU	Level-1-260C-UNLIM	-55 to 125	HCT574M
CD74HCT574PWR	Active	Production	TSSOP (PW) | 20	2000 | LARGE T&R	Yes	NIPDAU | NIPDAU	Level-1-260C-UNLIM	-55 to 125	HK574
CD74HCT574PWR.A	Active	Production	TSSOP (PW) | 20	2000 | LARGE T&R	Yes	NIPDAU	Level-1-260C-UNLIM	-55 to 125	HK574

(1) **Status:** For more details on status, see our product life cycle.

(2) **Material type:** When designated, preproduction parts are prototypes/experimental devices, and are not yet approved or released for full production. Testing and final process, including without limitation quality assurance, reliability performance testing, and/or process qualification, may not yet be complete, and this item is subject to further changes or possible discontinuation. If available for ordering, purchases will be subject to an additional waiver at checkout, and are intended for early internal evaluation purposes only. These items are sold without warranties of any kind.

(3) **RoHS values:** Yes, No, RoHS Exempt. See the TI RoHS Statement for additional information and value definition.

(4) **Lead finish/Ball material:** Parts may have multiple material finish options. Finish options are separated by a vertical ruled line. Lead finish/Ball material values may wrap to two lines if the finish value exceeds the maximum column width.

(5) **MSL rating/Peak reflow:** The moisture sensitivity level ratings and peak solder (reflow) temperatures. In the event that a part has multiple moisture sensitivity ratings, only the lowest level per JEDEC standards is shown. Refer to the shipping label for the actual reflow temperature that will be used to mount the part to the printed circuit board.

(6) **Part marking:** There may be an additional marking, which relates to the logo, the lot trace code information, or the environmental category of the part.

Multiple part markings will be inside parentheses. Only one part marking contained in parentheses and separated by a "~" will appear on a part. If a line is indented then it is a continuation of the previous line and the two combined represent the entire part marking for that device.

Important Information and Disclaimer: The information provided on this page represents TI's knowledge and belief as of the date that it is provided. TI bases its knowledge and belief on information provided by third parties, and makes no representation or warranty as to the accuracy of such information. Efforts are underway to better integrate information from third parties. TI has taken and continues to take reasonable steps to provide representative and accurate information but may not have conducted destructive testing or chemical analysis on incoming materials and chemicals. TI and TI suppliers consider certain information to be proprietary, and thus CAS numbers and other limited information may not be available for release.

In no event shall TI's liability arising out of such information exceed the total purchase price of the TI part(s) at issue in this document sold by TI to Customer on an annual basis.

OTHER QUALIFIED VERSIONS OF CD54HC374, CD54HC574, CD54HCT374, CD54HCT574, CD74HC374, CD74HC574, CD74HCT374, CD74HCT574 :

- Catalog : CD74HC374, CD74HC574, CD74HCT374, CD74HCT574
- Automotive : CD74HCT574-Q1, CD74HCT574-Q1
- Enhanced Product : CD74HCT574-EP, CD74HCT574-EP
- Military : CD54HC374, CD54HC574, CD54HCT374, CD54HCT574

NOTE: Qualified Version Definitions:

- Catalog - TI's standard catalog product
- Automotive - Q100 devices qualified for high-reliability automotive applications targeting zero defects
- Enhanced Product - Supports Defense, Aerospace and Medical Applications
- Military - QML certified for Military and Defense Applications

TAPE AND REEL INFORMATION

REEL DIMENSIONS

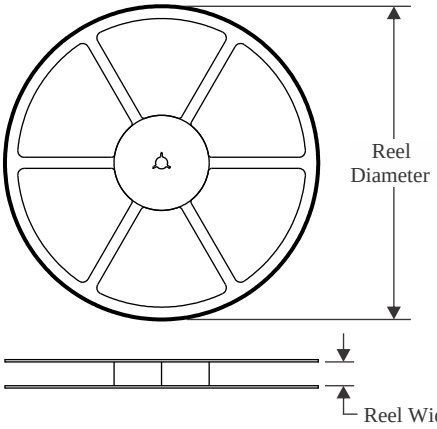

TAPE DIMENSIONS

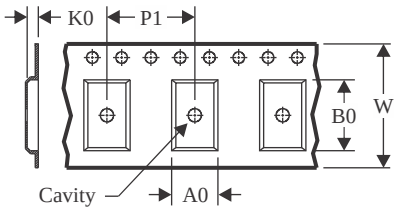

A0	Dimension designed to accommodate the component width
B0	Dimension designed to accommodate the component length
K0	Dimension designed to accommodate the component thickness
W	Overall width of the carrier tape
P1	Pitch between successive cavity centers

QUADRANT ASSIGNMENTS FOR PIN 1 ORIENTATION IN TAPE

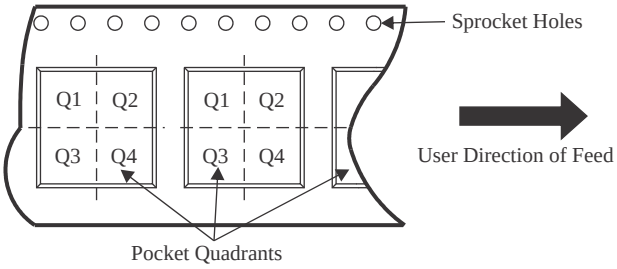

*All dimensions are nominal

Device	Package Type	Package Drawing	Pins	SPQ	Reel Diameter (mm)	Reel Width W1 (mm)	A0 (mm)	B0 (mm)	K0 (mm)	P1 (mm)	W (mm)	Pin1 Quadrant
CD74HC374M96	SOIC	DW	20	2000	330.0	24.4	10.8	13.3	2.7	12.0	24.0	Q1
CD74HC574M96	SOIC	DW	20	2000	330.0	24.4	10.8	13.3	2.7	12.0	24.0	Q1
CD74HC574M96	SOIC	DW	20	2000	330.0	24.4	10.9	13.3	2.7	12.0	24.0	Q1
CD74HCT374M96	SOIC	DW	20	2000	330.0	24.4	10.8	13.3	2.7	12.0	24.0	Q1
CD74HCT574M96	SOIC	DW	20	2000	330.0	24.4	10.8	13.3	2.7	12.0	24.0	Q1
CD74HCT574PWR	TSSOP	PW	20	2000	330.0	16.4	6.95	7.0	1.4	8.0	16.0	Q1

TAPE AND REEL BOX DIMENSIONS

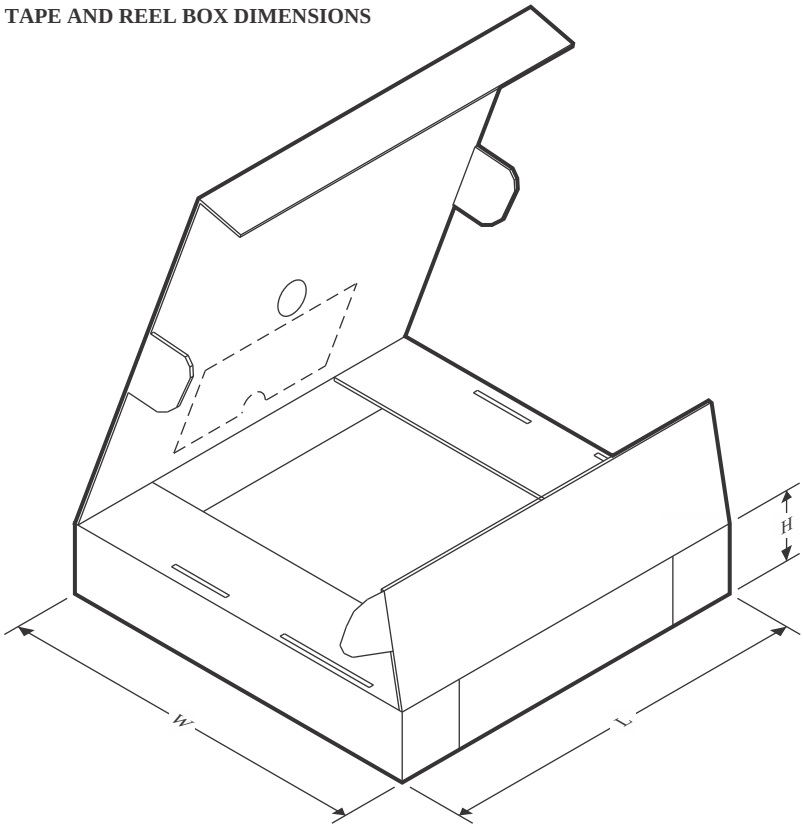

*All dimensions are nominal

Device	Package Type	Package Drawing	Pins	SPQ	Length (mm)	Width (mm)	Height (mm)
CD74HC374M96	SOIC	DW	20	2000	367.0	367.0	45.0
CD74HC574M96	SOIC	DW	20	2000	367.0	367.0	45.0
CD74HC574M96	SOIC	DW	20	2000	367.0	367.0	45.0
CD74HCT374M96	SOIC	DW	20	2000	367.0	367.0	45.0
CD74HCT574M96	SOIC	DW	20	2000	367.0	367.0	45.0
CD74HCT574PWR	TSSOP	PW	20	2000	356.0	356.0	35.0

TUBE

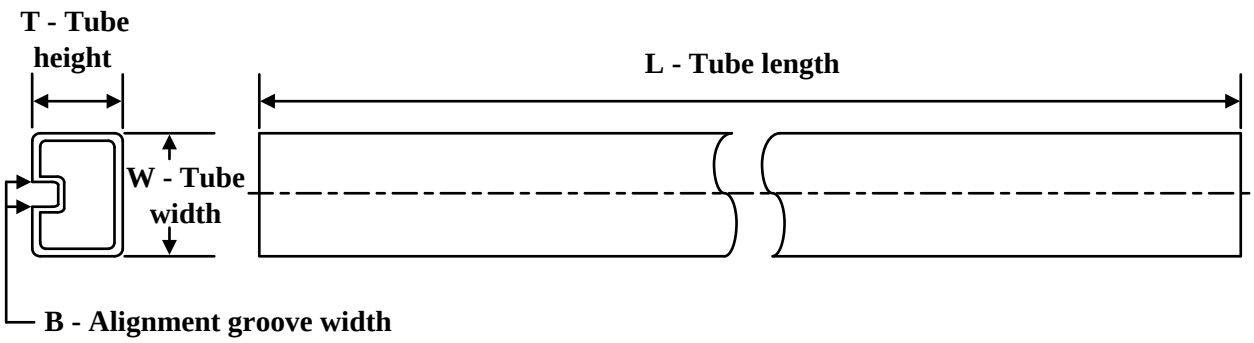

*All dimensions are nominal

Device	Package Name	Package Type	Pins	SPQ	L (mm)	W (mm)	T (µm)	B (mm)
CD74HC374E	N	PDIP	20	20	506	13.97	11230	4.32
CD74HC374E.A	N	PDIP	20	20	506	13.97	11230	4.32
CD74HC574E	N	PDIP	20	20	506	13.97	11230	4.32
CD74HC574E.A	N	PDIP	20	20	506	13.97	11230	4.32
CD74HCT374E	N	PDIP	20	20	506	13.97	11230	4.32
CD74HCT374E.A	N	PDIP	20	20	506	13.97	11230	4.32
CD74HCT374EE4	N	PDIP	20	20	506	13.97	11230	4.32
CD74HCT574E	N	PDIP	20	20	506	13.97	11230	4.32
CD74HCT574E.A	N	PDIP	20	20	506	13.97	11230	4.32

N (R–PDIP–T**) PLASTIC DUAL–IN–LINE PACKAGE

16 PINS SHOWN

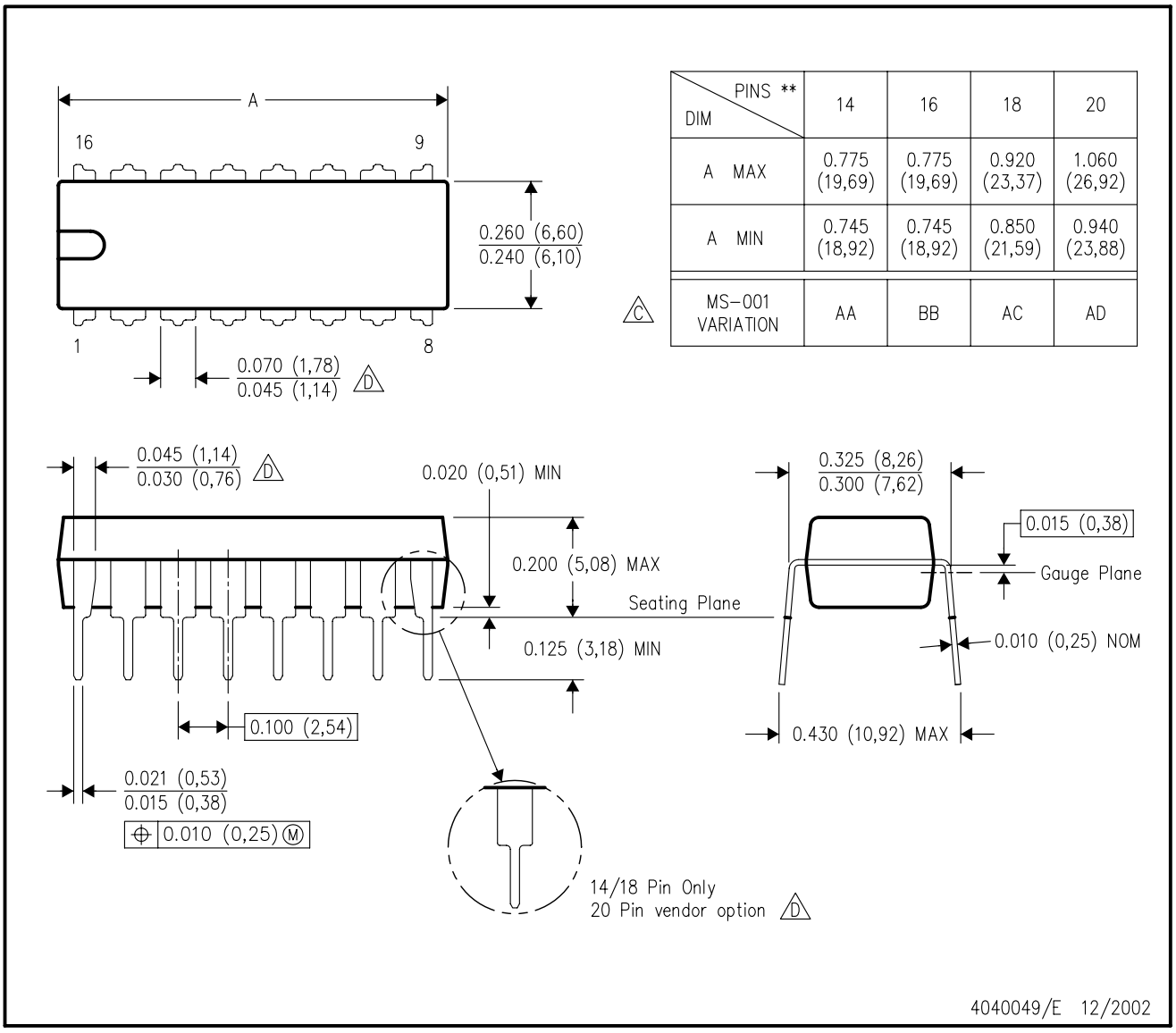

DIM \ PINS **	14	16	18	20
A MAX	0.775 (19,69)	0.775 (19,69)	0.920 (23,37)	1.060 (26,92)
A MIN	0.745 (18,92)	0.745 (18,92)	0.850 (21,59)	0.940 (23,88)
MS–001 VARIATION (C)	AA	BB	AC	AD

NOTES:
A. All linear dimensions are in inches (millimeters).
B. This drawing is subject to change without notice.
C. Falls within JEDEC MS–001, except 18 and 20 pin minimum body length (Dim A).
D. The 20 pin end lead shoulder width is a vendor option, either half or full width.

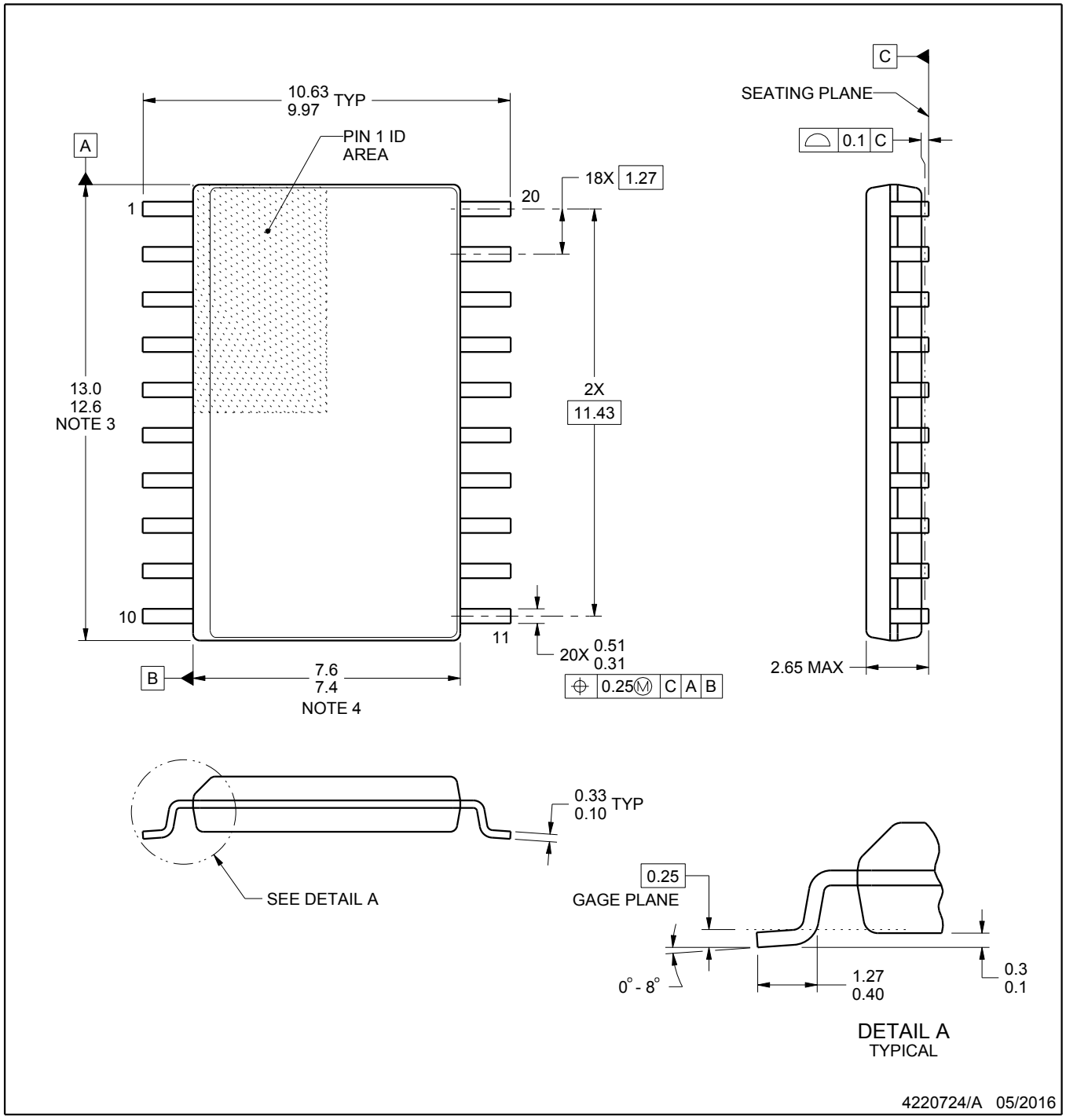

NOTES:

1. All linear dimensions are in millimeters. Dimensions in parenthesis are for reference only. Dimensioning and tolerancing per ASME Y14.5M.
2. This drawing is subject to change without notice.
3. This dimension does not include mold flash, protrusions, or gate burrs. Mold flash, protrusions, or gate burrs shall not exceed 0.15 mm per side.
4. This dimension does not include interlead flash. Interlead flash shall not exceed 0.43 mm per side.
5. Reference JEDEC registration MS-013.

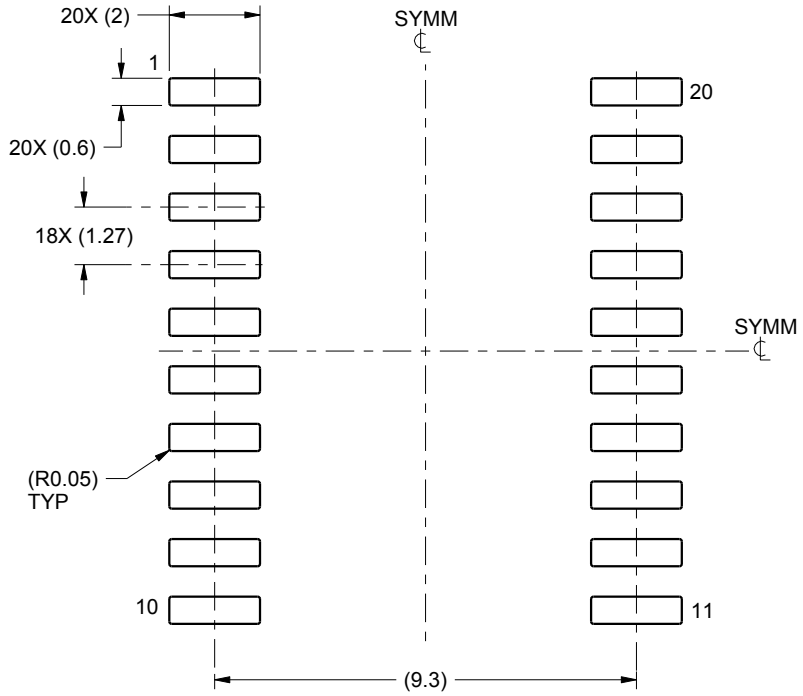

LAND PATTERN EXAMPLE
SCALE:6X

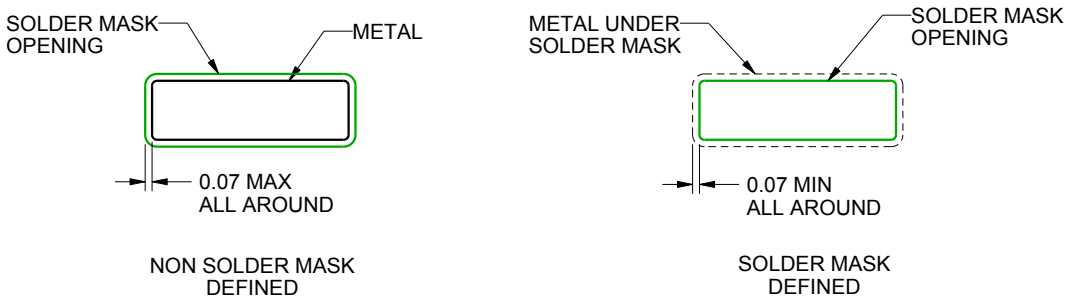

SOLDER MASK DETAILS

4220724/A 05/2016

NOTES: (continued)

6. Publication IPC-7351 may have alternate designs.
7. Solder mask tolerances between and around signal pads can vary based on board fabrication site.

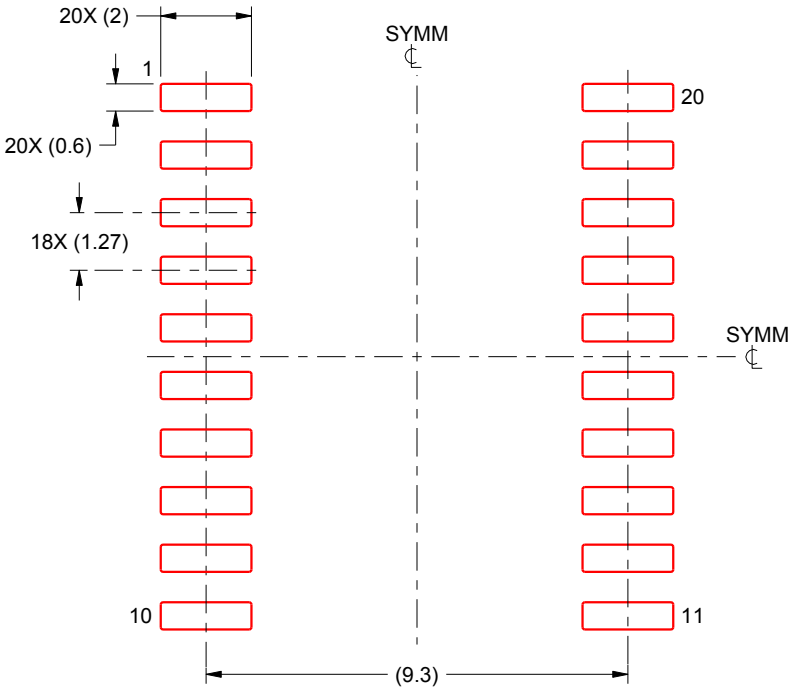

SOLDER PASTE EXAMPLE
BASED ON 0.125 mm THICK STENCIL
SCALE:6X

4220724/A 05/2016

NOTES: (continued)

8. Laser cutting apertures with trapezoidal walls and rounded corners may offer better paste release. IPC-7525 may have alternate design recommendations.
9. Board assembly site may have different recommendations for stencil design.

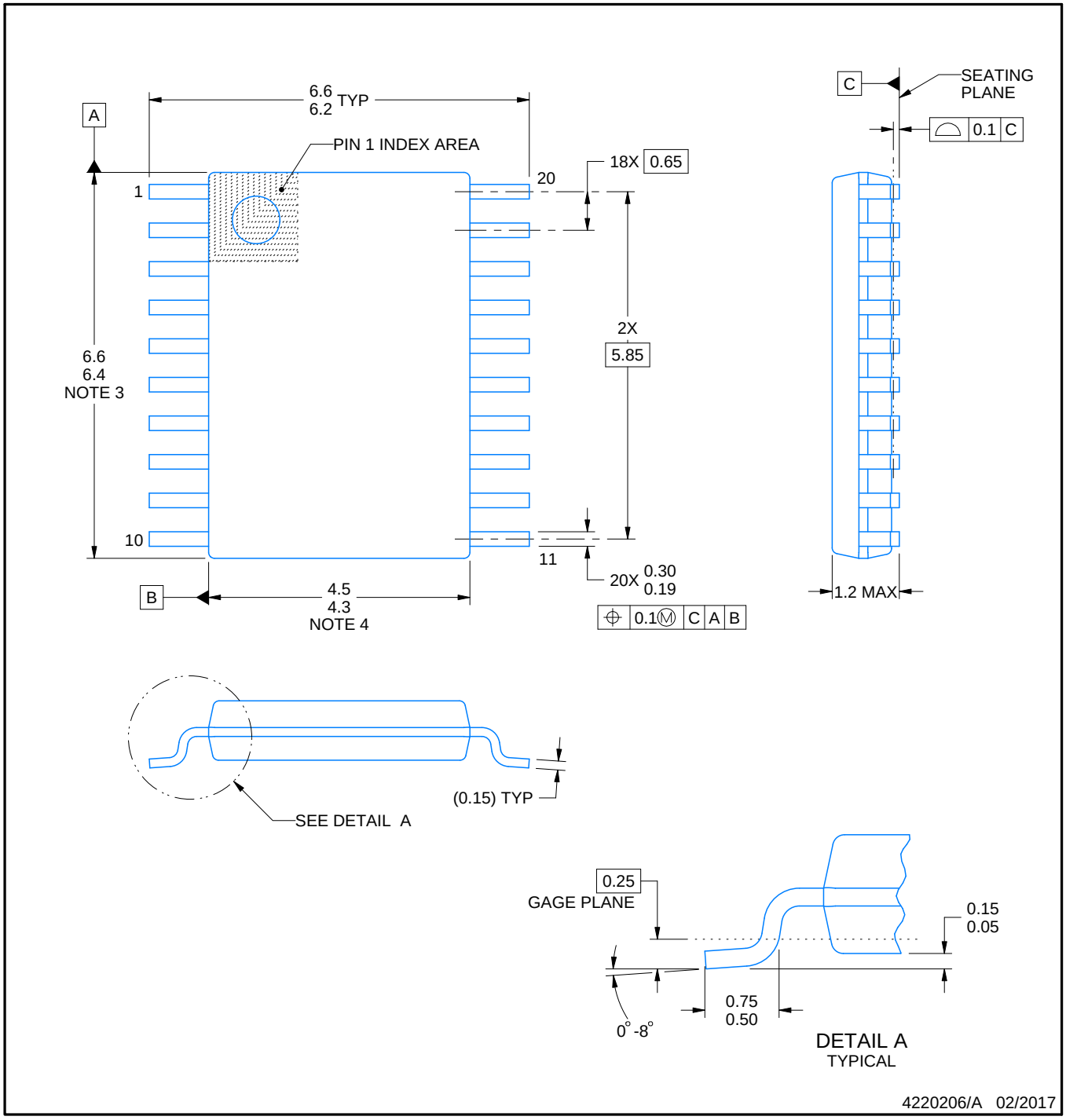

NOTES:

1. All linear dimensions are in millimeters. Any dimensions in parenthesis are for reference only. Dimensioning and tolerancing per ASME Y14.5M.
2. This drawing is subject to change without notice.
3. This dimension does not include mold flash, protrusions, or gate burrs. Mold flash, protrusions, or gate burrs shall not exceed 0.15 mm per side.
4. This dimension does not include interlead flash. Interlead flash shall not exceed 0.25 mm per side.
5. Reference JEDEC registration MO-153.

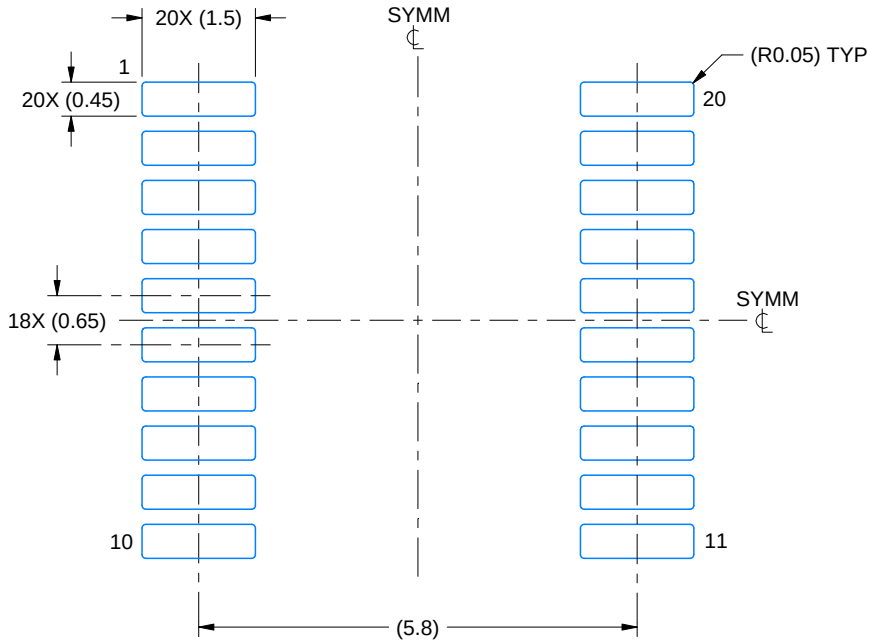

LAND PATTERN EXAMPLE
EXPOSED METAL SHOWN
SCALE: 10X

NON-SOLDER MASK DEFINED (PREFERRED)

SOLDER MASK DEFINED

SOLDER MASK DETAILS

4220206/A 02/2017

NOTES: (continued)

6. Publication IPC-7351 may have alternate designs.
7. Solder mask tolerances between and around signal pads can vary based on board fabrication site.

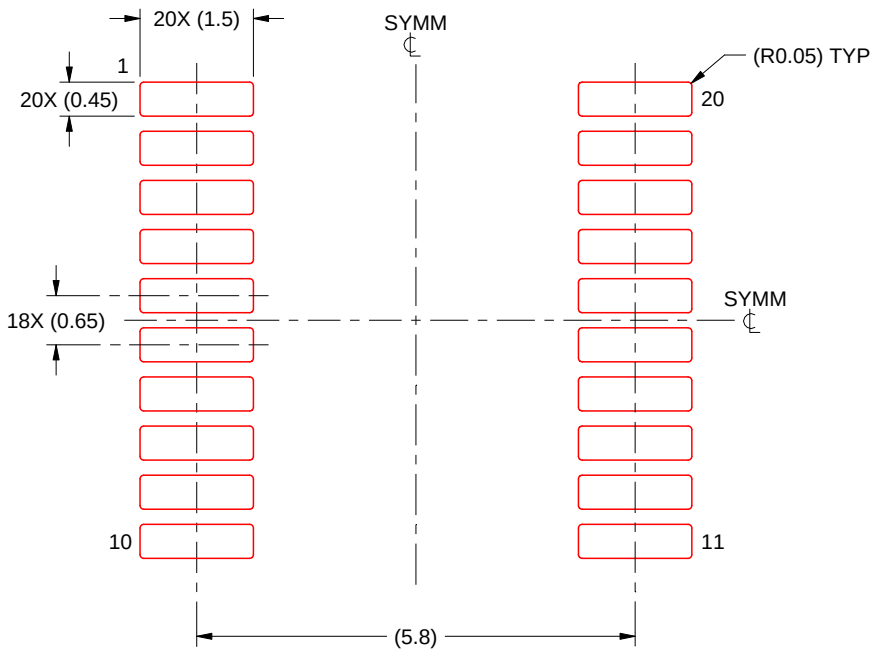

SOLDER PASTE EXAMPLE
BASED ON 0.125 mm THICK STENCIL
SCALE: 10X

4220206/A 02/2017

NOTES: (continued)

8. Laser cutting apertures with trapezoidal walls and rounded corners may offer better paste release. IPC-7525 may have alternate design recommendations.
9. Board assembly site may have different recommendations for stencil design.

J (R–GDIP–T**) CERAMIC DUAL IN–LINE PACKAGE

14 LEADS SHOWN

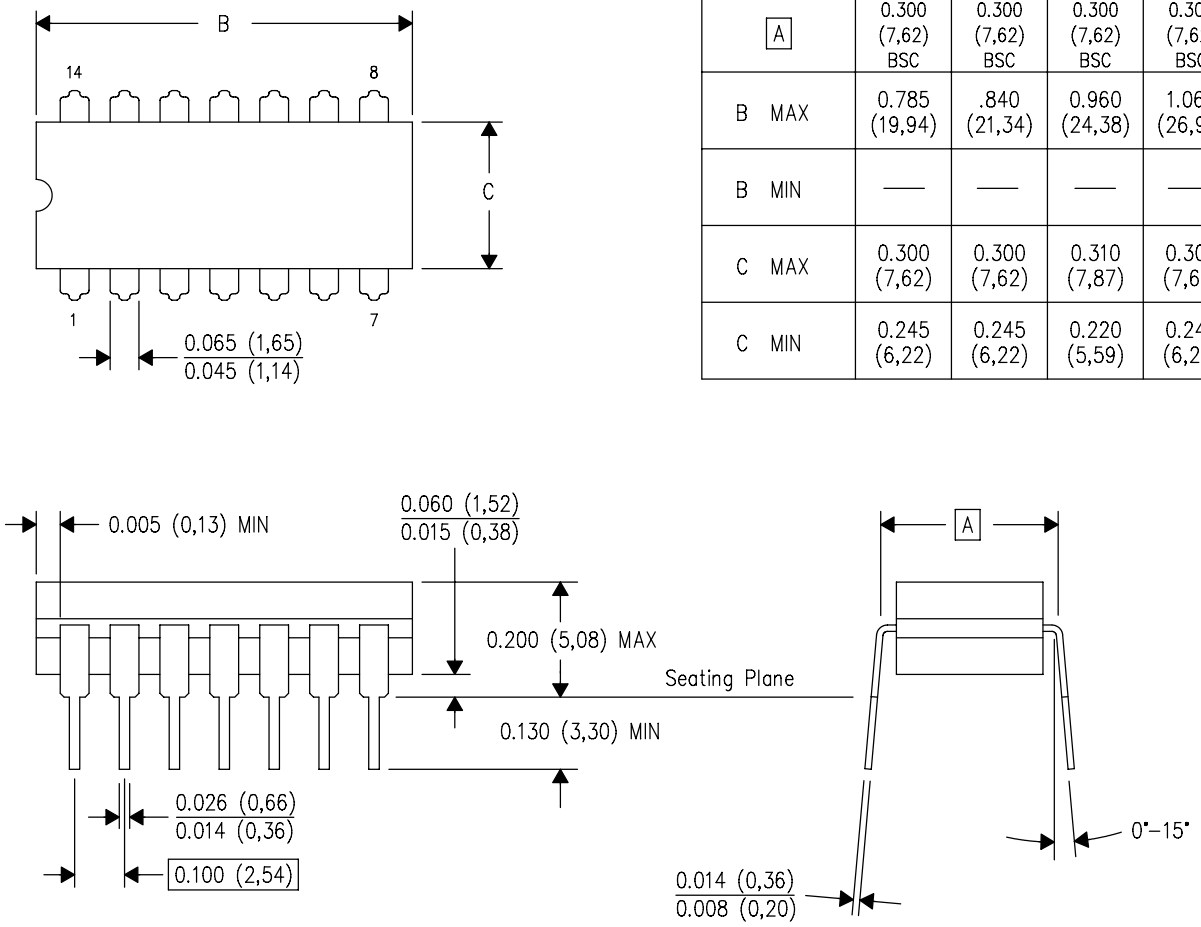

DIM \ PINS **	14	16	18	20
A	0.300 (7,62) BSC	0.300 (7,62) BSC	0.300 (7,62) BSC	0.300 (7,62) BSC
B MAX	0.785 (19,94)	.840 (21,34)	0.960 (24,38)	1.060 (26,92)
B MIN	—	—	—	—
C MAX	0.300 (7,62)	0.300 (7,62)	0.310 (7,87)	0.300 (7,62)
C MIN	0.245 (6,22)	0.245 (6,22)	0.220 (5,59)	0.245 (6,22)

4040083/F 03/03

NOTES:
- A. All linear dimensions are in inches (millimeters).
- B. This drawing is subject to change without notice.
- C. This package is hermetically sealed with a ceramic lid using glass frit.
- D. Index point is provided on cap for terminal identification only on press ceramic glass frit seal only.
- E. Falls within MIL STD 1835 GDIP1–T14, GDIP1–T16, GDIP1–T18 and GDIP1–T20.

IMPORTANT NOTICE AND DISCLAIMER

TI PROVIDES TECHNICAL AND RELIABILITY DATA (INCLUDING DATA SHEETS), DESIGN RESOURCES (INCLUDING REFERENCE DESIGNS), APPLICATION OR OTHER DESIGN ADVICE, WEB TOOLS, SAFETY INFORMATION, AND OTHER RESOURCES “AS IS” AND WITH ALL FAULTS, AND DISCLAIMS ALL WARRANTIES, EXPRESS AND IMPLIED, INCLUDING WITHOUT LIMITATION ANY IMPLIED WARRANTIES OF MERCHANTABILITY, FITNESS FOR A PARTICULAR PURPOSE OR NON-INFRINGEMENT OF THIRD PARTY INTELLECTUAL PROPERTY RIGHTS.

These resources are intended for skilled developers designing with TI products. You are solely responsible for (1) selecting the appropriate TI products for your application, (2) designing, validating and testing your application, and (3) ensuring your application meets applicable standards, and any other safety, security, regulatory or other requirements.

These resources are subject to change without notice. TI grants you permission to use these resources only for development of an application that uses the TI products described in the resource. Other reproduction and display of these resources is prohibited. No license is granted to any other TI intellectual property right or to any third party intellectual property right. TI disclaims responsibility for, and you will fully indemnify TI and its representatives against, any claims, damages, costs, losses, and liabilities arising out of your use of these resources.

TI’s products are provided subject to TI’s Terms of Sale or other applicable terms available either on ti.com or provided in conjunction with such TI products. TI’s provision of these resources does not expand or otherwise alter TI’s applicable warranties or warranty disclaimers for TI products.

TI objects to and rejects any additional or different terms you may have proposed.

Mailing Address: Texas Instruments, Post Office Box 655303, Dallas, Texas 75265
Copyright © 2025, Texas Instruments Incorporated