LM317HV-MIL High Voltage Three-Terminal Adjustable Regulator With Overload Protection

1 Features

- Up to 60 V Input to Output Differential
- 1.5-A Output Current
- Line Regulation 0.01%/V (Typical)
- Load Regulation 0.1% (Typical)
- 80-dB Ripple Rejection (Typical)
- Internal Short-Circuit Current Limiting Protection
- Thermal Overload Protection
- 0 to 125°C Operating Temperature Range

2 Applications

- Industrial Power Supplies
- PLC Systems
- Factory Automation Systems
- Building Automation Systems
- Battery Charger

1.2-V to 50-V Adjustable Regulator With High Voltage Input

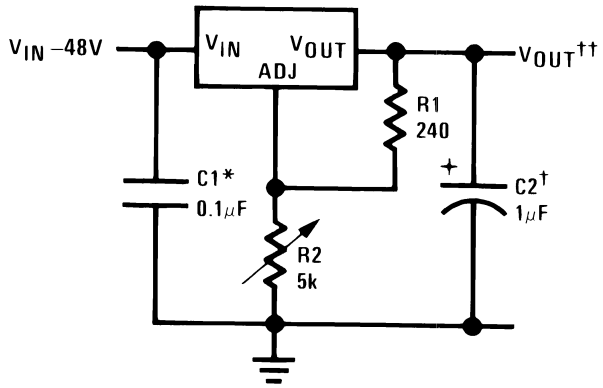

*Needed if device is more than 6 inches from filter capacitors. .

†Optional—improves transient response

$$_{\dagger\dagger}V_{OUT} = 1.25\ V\left(1+\frac{R2}{R1}\right)+I_{ADJ}\left(R_2\right)$$

3 Description

The LM317HV-MIL is an adjustable 3-terminal positive voltage regulator capable of supplying 1.5 A or more currents over a 1.25-V to 57-V output voltage range. It requires only two external resistors to set the output voltage. The LM317HV-MIL is packaged in standard transistor packages that are easily mounted and handled.

The LM317HV-MIL offers overload protection like current limit, thermal overload protection and safe area protection, which make the device blowout proof. The overload protection circuitry remains fully functional even if the adjustment terminal is disconnected.

Typically, no capacitors are needed unless the device is situated more than 6 inches from the input filter capacitors, in which case an input bypass is needed. An optional output capacitor can be added to improve transient response. The adjustment terminal can be bypassed to achieve very high ripple rejection ratios which are difficult to achieve with standard 3-terminal regulators.

Since the regulator is *floating* and sees only the input-to-output differential voltage, supplies of several hundred volts can be regulated as long as the maximum input to output differential is not exceeded, or in other words, do not short the output to ground.

By connecting a fixed resistor between the adjustment and output, the LM317HV-MIL can also be used as a precision current regulator. Supplies with electronic shutdown can be achieved by clamping the adjustment terminal to ground, which programs the output to 1.25 V where most loads draw little current.

Device Information(1)

PART NUMBER	PACKAGE	BODY SIZE (NOM)
LM317HV-MIL	TO-39 (3)	8.255 mm × 8.255 mm
	TO-3 (2)	19.507 mm × 19.507 mm
	TO-220 (3)	14.986 mm × 10.16 mm

(1) For all available packages, see the orderable addendum at the end of the data sheet.

An IMPORTANT NOTICE at the end of this data sheet addresses availability, warranty, changes, use in safety-critical applications, intellectual property matters and other important disclaimers. PRODUCTION DATA.

Table of Contents

1 Features ... 1
2 Applications ... 1
3 Description ... 1
4 Revision History ... 2
5 Pin Configuration and Functions ... 3
6 Specifications ... 4
6.1 Absolute Maximum Ratings ... 4
6.2 ESD Ratings ... 4
6.3 Recommended Operating Conditions ... 4
6.4 Thermal Information ... 4
6.5 Electrical Characteristics ... 5
6.6 Typical Characteristics ... 6
7 Detailed Description ... 8
7.1 Overview ... 8
7.2 Functional Block Diagram ... 8
7.3 Feature Description ... 9
7.4 Device Functional Modes ... 9
8 Application and Implementation ... 11
8.1 Application Information ... 11
8.2 Typical Applications ... 11
9 Power Supply Recommendations ... 20
10 Layout ... 20
10.1 Layout Guidelines ... 20
10.2 Layout Example ... 20
11 Device and Documentation Support ... 21
11.1 Related Links ... 21
11.2 Community Resources ... 21
11.3 Trademarks ... 21
11.4 Electrostatic Discharge Caution ... 21
11.5 Glossary ... 21
12 Mechanical, Packaging, and Orderable Information ... 21

4 Revision History

DATE	REVISION	NOTES
June 2017	*	Initial Release

Copyright © 2017, Texas Instruments Incorporated

5 Pin Configuration and Functions

Metal Can NDS Package
2-Pin TO-3
Bottom View

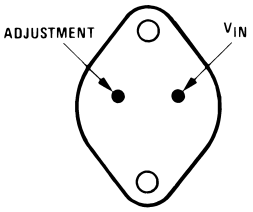

Metal Can NDT Package
3-pin TO-39
Bottom View

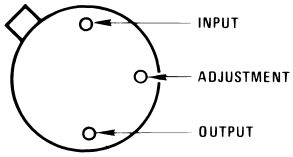

NDE Package
3-Pin TO-220
Front View

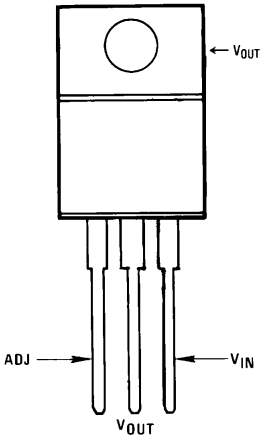

Pin Functions

NAME	PIN			I/O	DESCRIPTION
	TO-39 NO.	TO-3 NO.	TO-220 NO.		
ADJ	2	1	1	—	Adjust Pin
V_{OUT}	3, CASE	CASE	2, TAB	O	Output voltage pin for the regulator
V_{IN}	1	2	3	I	Input voltage pin for the regulator

6 Specifications

6.1 Absolute Maximum Ratings

See [1].

	MIN	MAX	UNIT
Power dissipation	Internally limited		
Input–output voltage differential	−0.3	60	V
Lead temperature (soldering, 10 seconds)		300	°C
Storage temperature, T_{stg}	−65	150	°C

(1) Stresses beyond those listed under *Absolute Maximum Ratings* may cause permanent damage to the device. These are stress ratings only, which do not imply functional operation of the device at these or any other conditions beyond those indicated under *Recommended Operating Conditions*. Exposure to absolute-maximum-rated conditions for extended periods may affect device reliability.

6.2 ESD Ratings

			VALUE	UNIT
$V_{(ESD)}$	Electrostatic discharge	Human body model (HBM)[1]	±2000	V

(1) Manufacturing with less than 500-V HBM is possible with the necessary precautions.

6.3 Recommended Operating Conditions

over operating free-air temperature range (unless otherwise noted)

	MIN	MAX	UNIT
Operating junction temperature	0	125	°C

6.4 Thermal Information

THERMAL METRIC[1]		LM317HV			UNIT
		NDT (TO-39)	NDS (TO-3)	NDE (TO-220)	
		3 PINS	2 PINS	3 PINS	
$R_{\theta JA}$	Junction-to-ambient thermal resistance	140[2]	35[2]	23.0	°C/W
$R_{\theta JC(top)}$	Junction-to-case (top) thermal resistance	12	2.3	15.9	°C/W
$R_{\theta JB}$	Junction-to-board thermal resistance	—	—	4.6	°C/W
ψ_{JT}	Junction-to-top characterization parameter	—	—	2.5	°C/W
ψ_{JB}	Junction-to-board characterization parameter	—	—	4.6	°C/W
$R_{\theta JC(bot)}$	Junction-to-case (bottom) thermal resistance	—	—	0.9	°C/W

(1) For more information about traditional and new thermal metrics, see the *Semiconductor and IC Package Thermal Metrics* application report, SPRA953.
(2) No Heat Sink

Copyright © 2017, Texas Instruments Incorporated

6.5 Electrical Characteristics(1)

PARAMETER	TEST CONDITIONS		MIN	TYP	MAX	UNIT
Line Regulation	$3\ V \le V_{IN} - V_{OUT} \le 60\ V$ $I_L = 10\ mA$(2)	$T_J = 25°C$		0.01	0.04	%/V
		over full Operating Temperature Range		0.02	0.07	%/V
Load Regulation	$10\ mA \le I_{OUT} \le I_{MAX}$	$T_J = 25°C$		0.1%	0.5%	
		over full Operating Temperature Range		0.3%	1.5%	
Thermal Regulation	$T_J = 25°C$, 20 ms Pulse			0.04	0.07	%/W
Adjustment Pin Current				50	100	µA
Adjustment Pin Current Change	$10\ mA \le I_L \le I_{MAX}$ $3\ V \le (V_{IN} - V_{OUT}) \le 60\ V$			0.2	5	µA
Reference Voltage	$3\ V \le (V_{IN} - V_{OUT}) \le 60\ V$ $10\ mA \le I_{OUT} \le I_{MAX}$, $P \le P_{MAX}$		1.2	1.25	1.3	V
Temperature Stability	$T_{MIN} \le T_J \le T_{MAX}$			1%		
Minimum Load Current	$(V_{IN} - V_{OUT}) = 60\ V$			3.5	12	mA
Current Limit	$(V_{IN} - V_{OUT}) \le 15\ V$	TO-3, TO-220 Packages	1.5	2.2	3.7	A
		TO-39 Package	0.5	0.8	1.9	
	$(V_{IN} - V_{OUT}) \le 60\ V$	TO-3, TO-220 Packages		0.3		A
		TO-39 Package		0.03		
RMS Output Noise, % of V_{OUT}	$T_J = 25°C$, 10 Hz ≤ f ≤ 10 kHz			0.003%		
Ripple Rejection Ratio	$V_{OUT} = 10V$, f = 120 Hz			65		dB
	$C_{ADJ} = 10\ \mu F$		66	80		dB
Long-Term Stability	$T_J = 125°C$			0.3%	1%	

(1) Unless otherwise specified, these specifications apply: 0°C ≤ T_J ≤ +125°C; $V_{IN} - V_{OUT} = 5\ V$ and $I_{OUT} = 0.1\ A$ for the TO-39 package and $I_{OUT} = 0.5\ A$ for the TO-3 and TO-220 packages. Although power dissipation is internally limited, these specifications are applicable for power dissipations of 2 W for the TO-39 and 20 W for the TO-3 and TO-220. I_{MAX} is 1.5 A for the TO-3 and TO-220 and 0.5 A for the TO-39 package.

(2) Regulation is measured at constant junction temperature. Changes in output voltage due to heating effects must be taken into account separately. Pulse testing with low duty cycle is used.

6.6 Typical Characteristics

Output capacitor = 0 μF unless otherwise noted.

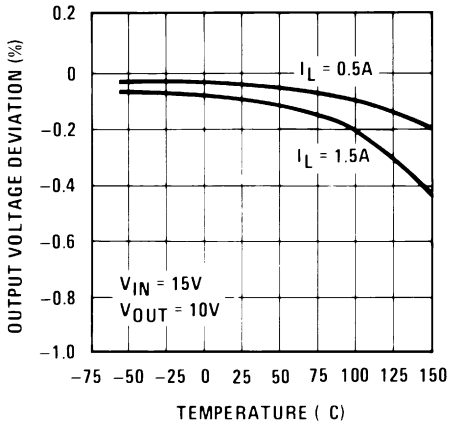

Figure 1. Load Regulation

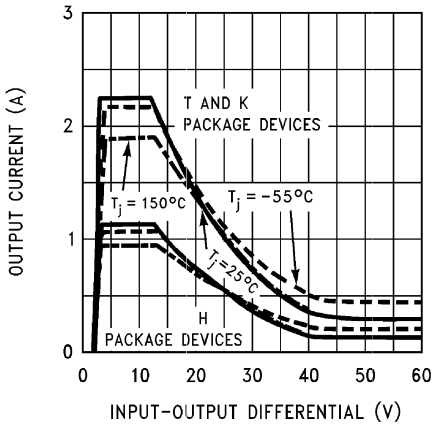

Figure 2. Current Limit

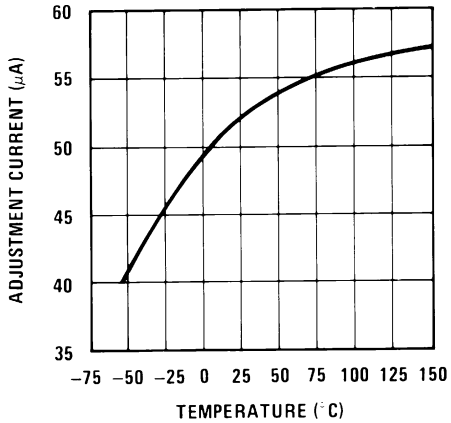

Figure 3. Adjustment Current

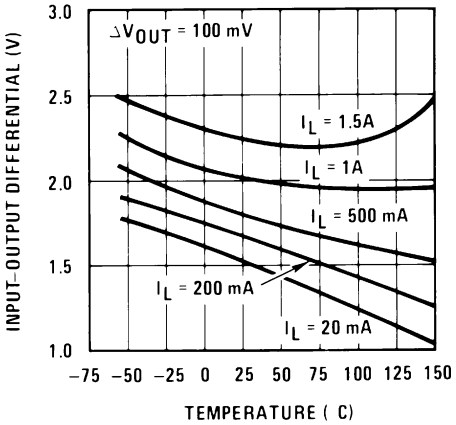

Figure 4. Dropout Voltage

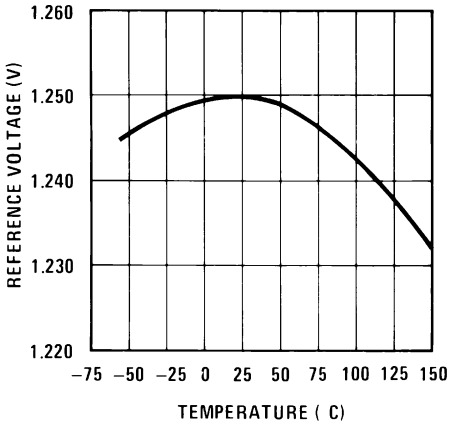

Figure 5. Temperature Stability

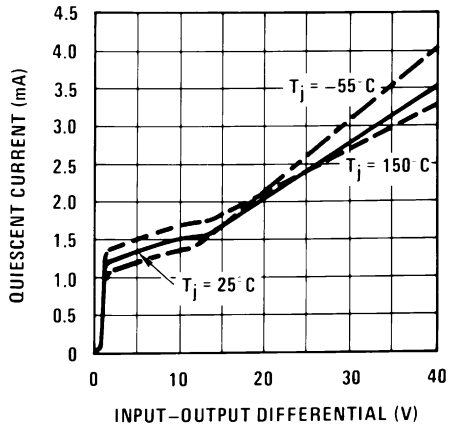

Figure 6. Minimum Operating Current

Copyright © 2017, Texas Instruments Incorporated

Typical Characteristics (continued)

Output capacitor = 0 μF unless otherwise noted.

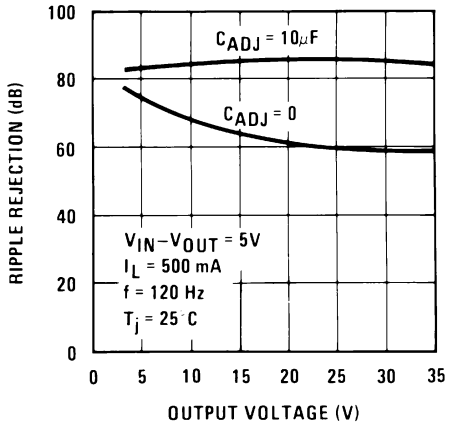

Figure 7. Ripple Rejection

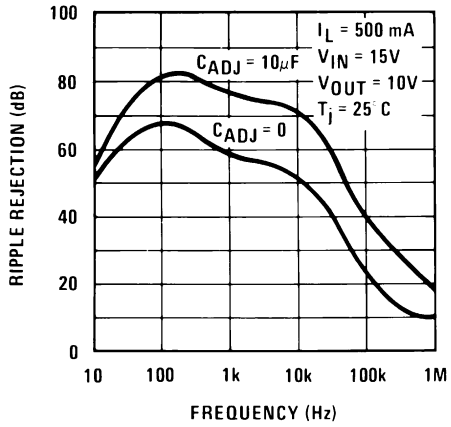

Figure 8. Ripple Rejection

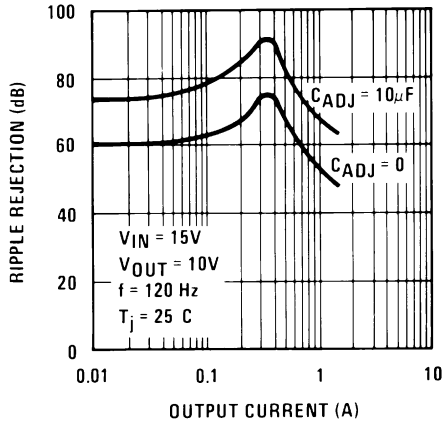

Figure 9. Ripple Rejection

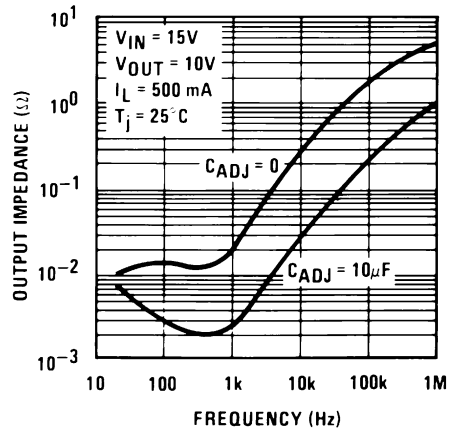

Figure 10. Output Impedance

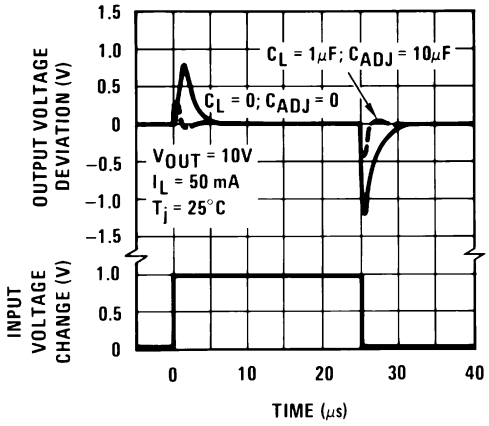

Figure 11. Line Transient Response

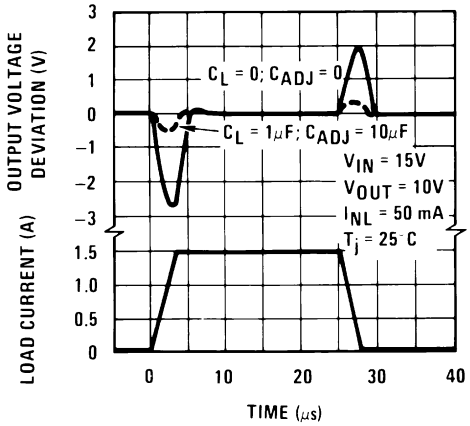

Figure 12. Load Transient Response

7 Detailed Description

7.1 Overview

In operation, the LM317HV-MIL develops a nominal 1.25-V reference voltage, V_{REF}, between the output and adjustment terminal. The reference voltage is impressed across program resistor R1 and, since the voltage is constant, a constant current I_1 then flows through the output set resistor R2, giving an output voltage calculated by Equation 1:

$$V_{OUT} = V_{REF}\left(1+\frac{R2}{R1}\right)+I_{ADJ}\left(R_2\right) \tag{1}$$

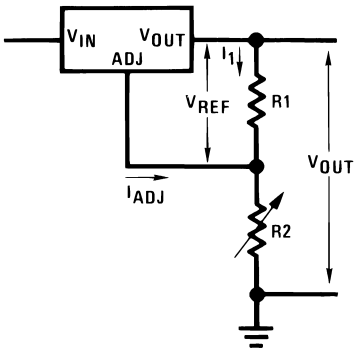

Figure 13. Adjustable V_{OUT} Through R1 and R2

Because the 100-µA current from the adjustment terminal represents an error term, the LM317HV-MIL was designed to minimize I_{ADJ} and make it very constant with line and load changes. To do this, all quiescent operating current is returned to the output establishing a minimum load current requirement. If there is insufficient load on the output, the output will rise.

7.2 Functional Block Diagram

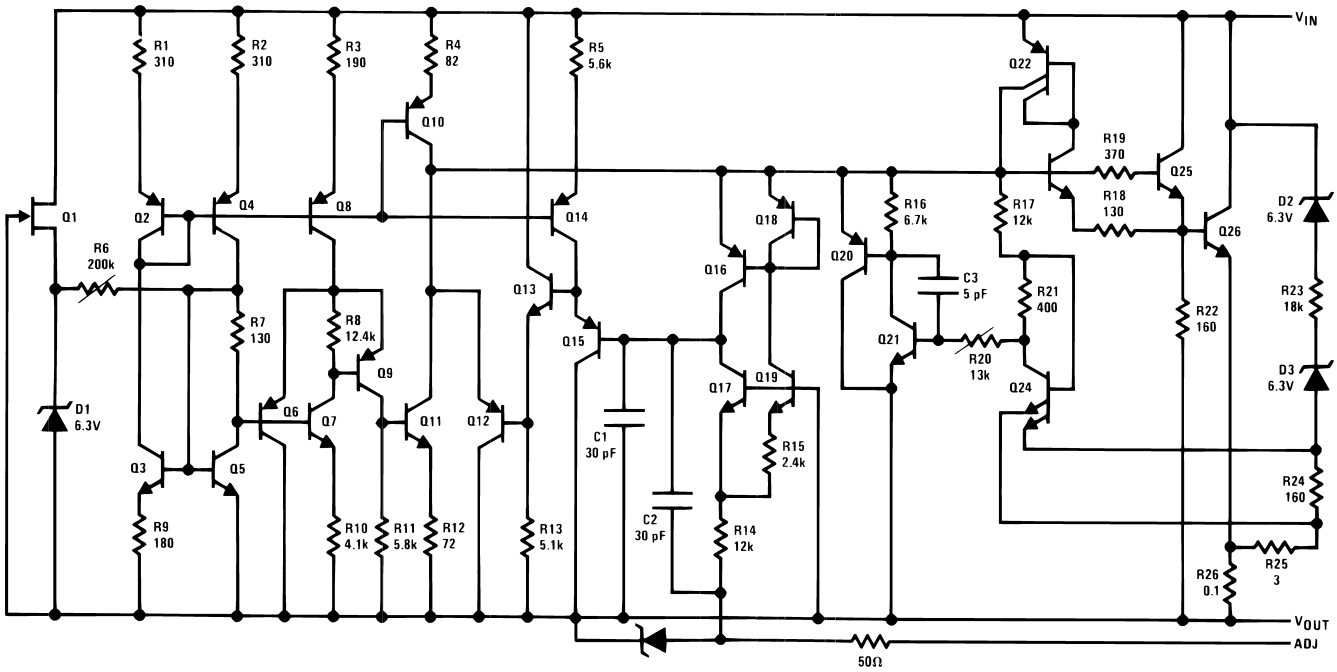

Copyright © 2017, Texas Instruments Incorporated

7.3 Feature Description

7.3.1 Load Regulation

The LM317HV-MIL is capable of providing extremely good load regulation but a few precautions are needed to obtain maximum performance. The current set resistor, R1, should be connected near the output terminal of the regulator rather than near the load. If R1 is placed too far from the output terminal, then the increased trace resistance, R_S, will cause an error voltage drop in the adjustment loop and degrade load regulation performance. Therefore, R1 should be placed as close as possible to the output terminal to minimize R_S and maximize load regulation performance.

Figure 14 shows the effect of the trace resistance, R_S, when R1 is placed far from the output terminal of the regulator. It is clear that R_S will cause an error voltage drop especially during higher current loads, so it is important to minimize the R_S trace resistance by keeping R1 close to the regulator output terminal.

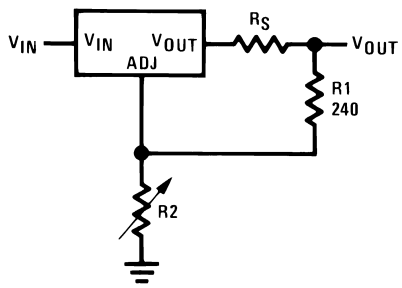

Figure 14. Regulator With Line Resistance in Output Lead

With the TO-3 package, it is easy to minimize the resistance from the case to the set resistor, by using two separate leads to the case. However, with the TO-39 package, take care to minimize the wire length of the output lead. The ground of R2 can be returned near the ground of the load to provide remote ground sensing and improve load regulation.

7.3.2 Current Limit

Internal current limit will be activated whenever the output current exceeds the limit indicated in *Typical Characteristics*. However, if the regulators differential voltage exceeds the absolute maximum rating of 60 V during a short-circuit condition (for example: $V_{IN} \geq 60$ V, $V_{OUT} = 0$ V), internal junctions in the regulator may break down and the device may be damaged or fail. Failure modes range from an apparent open or short from input to output of the regulator, to a destroyed package (most common with the TO-220 package). To protect the regulator, the user is advised to be aware of voltages that may be applied to the regulator during fault conditions and to avoid violating the *Absolute Maximum Ratings*.

7.4 Device Functional Modes

7.4.1 External Capacitors

An input bypass capacitor is recommended. A 0.1-µF disc or 1-µF solid tantalum on the input is suitable input bypassing for almost all applications. The device is more sensitive to the absence of input bypassing when adjustment or output capacitors are used but the above values will eliminate the possibility of problems.

The adjustment terminal can be bypassed to ground on the LM317HV-MIL to improve ripple rejection. This bypass capacitor prevents ripple from being amplified as the output voltage is increased. With a 10-µF bypass capacitor the 80-dB ripple rejection is obtainable at any output level. Increases over 10 µF do not appreciably improve the ripple rejection at frequencies above 120 Hz. If the bypass capacitor is used, it is sometimes necessary to include protection diodes to prevent the capacitor from discharging through internal low current paths and damaging the device.

Device Functional Modes (continued)

In general, the best type of capacitors to use are solid tantalum. Solid tantalum capacitors have low impedance even at high frequencies. Depending upon capacitor construction, it takes about 25 μF in aluminum electrolytic to equal 1 μF of solid tantalum at high frequencies. Ceramic capacitors are also good at high frequencies, but some types have a large decrease in capacitance at frequencies around 0.5 MHz. For this reason, a 0.01-μF disc may seem to work better than a 0.1-μF disc as a bypass.

Although the LM317HV-MIL is stable with no output capacitors, like any feedback circuit, certain values of external capacitance can cause excessive ringing. This occurs with values between 500 pF and 5000 pF. A 1-μF solid tantalum (or 25-μF aluminum electrolytic) on the output swamps this effect and ensures stability. Any increase of load capacitance larger than 10 μF will merely improve the loop stability and output impedance.

7.4.2 Protection Diodes

When external capacitors are used with any IC regulator it is sometimes necessary to add protection diodes to prevent the capacitors from discharging through low current points into the regulator. Most 10-μF capacitors have low enough internal series resistance to deliver 20-A spikes when shorted. Although the surge is short, there is enough energy to damage parts of the IC.

When an output capacitor is connected to a regulator and the input is shorted, the output capacitor will discharge into the output of the regulator. The discharge current depends on the value of the capacitor, the output voltage of the regulator, and the rate of decrease of VIN. In the LM317HV-MIL, this discharge path is through a large junction that is able to sustain 15-A surge with no problem. This is not true of other types of positive regulators. For output capacitors of 25 μF or less, there is no need to use diodes.

The bypass capacitor on the adjustment terminal can discharge through a low current junction. Discharge occurs when either the input or output is shorted. Internal to the LM317HV-MIL is a 50-Ω resistor which limits the peak discharge current. No protection is needed for output voltages of 25 V or less and 10-μF capacitance. Figure 15 shows an LM317HV-MIL with protection diodes included for use with outputs greater than 25 V and high values of output capacitance.

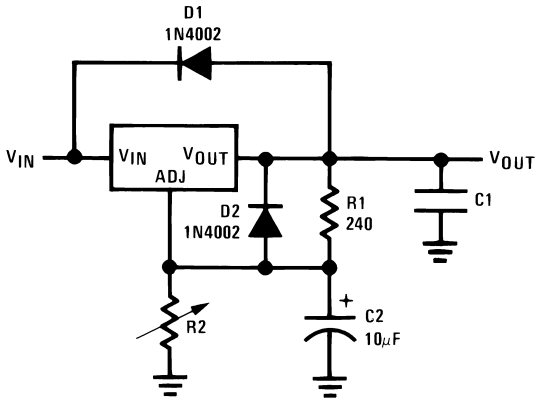

$$V_{OUT} = 1.25\ V\left(1+\frac{R2}{R1}\right)+I_{ADJ}\left(R_2\right)$$

D1 protects against C1

D2 protects against C2

Figure 15. Regulator With Protection Diodes

Copyright © 2017, Texas Instruments Incorporated

8 Application and Implementation

NOTE

Information in the following applications sections is not part of the TI component specification, and TI does not warrant its accuracy or completeness. TI's customers are responsible for determining suitability of components for their purposes. Customers should validate and test their design implementation to confirm system functionality.

8.1 Application Information

The LM317HV-MIL is a high voltage input capable linear regulator with overload protection. Due to its wide input voltage range, the LM317HV-MIL serves a variety of applications and provides a precise voltage regulation with low dropout across a wide output voltage and load current range. The device regulates a constant 1.25 V between V_{OUT} and ADJ, so placing a fixed resistor between these pins provides a constant current regulation. Capacitors at the input help filter the input power supply, while the output capacitors aid in transient response stability. A bypass capacitor can be placed between ADJ pin and ground (across R2) to improve ripple rejection.

8.2 Typical Applications

8.2.1 1.25-V to 45-V High Voltage Adjustable Regulator

The device can be used as an adjustable regulator to allow a variety of output voltages for high voltage applications. By using an adjustable R2 resistor, a variety of output voltages can be made possible as shown in Figure 16.

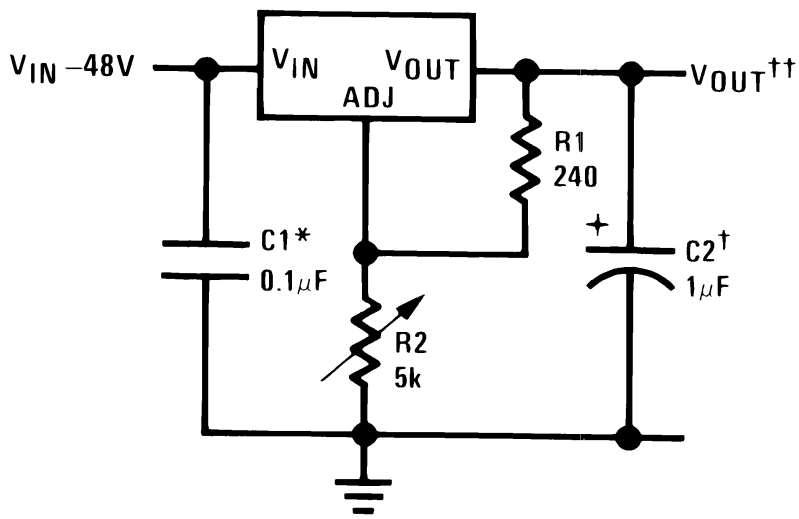

Full output current not available at high input-output voltages
†Optional—improves transient response. Output capacitors in the range of 1 μF to 1000 μF of aluminum or tantalum electrolytic
are commonly used to provide improved output impedance and rejection of transients.
*Needed if device is more than 6 inches from filter capacitors.

$$V_{OUT} = 1.25\ V\left(1+\frac{R2}{R1}\right)+I_{ADJ}\left(R_2\right)$$

††

Figure 16. 1.25-V to 45-V High Voltage Adjustable Regulator

8.2.1.1 Design Requirements

The device component count is very minimal, employing two resistors as part of a voltage divider circuit and an output capacitor for load regulation. An input capacitor is needed if the device is more than 6 inches from filter capacitors. An optional bypass capacitor across R2 can also be used to improve PSRR.

Typical Applications (continued)

8.2.1.2 Detailed Design Procedure

The output voltage is set based on the selection of the two resistors, R1 and R2, as shown in Figure 16. For details on capacitor selection, refer to *External Capacitors*.

8.2.1.3 Application Curve

As shown in Figure 17, the maximum output current capability is limited by the input-output voltage differential, package type, and junction temperature.

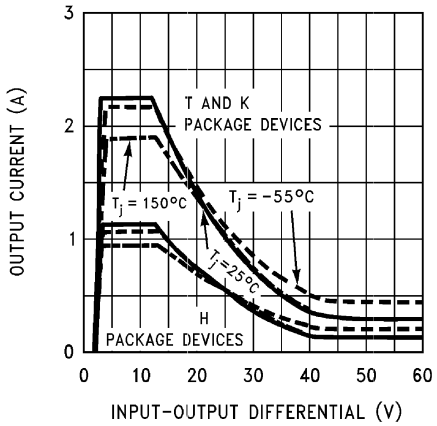

Figure 17. Current Limit

8.2.2 Digitally Selected Outputs

Figure 18 shows a digitally selectable output voltage. In its default state, all transistors are off and the output voltage is set based on R1 and R2. By driving certain transistors, the associated resistor is connected in parallel to R2, modifying the output voltage of the regulator.

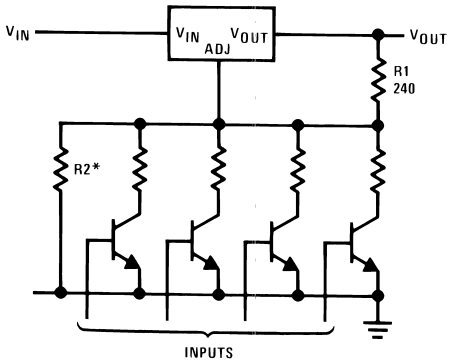

*Sets maximum V_{OUT}

Figure 18. Digitally Selected Outputs

8.2.3 Logic Regulator (5-V) With Electronic Shutdown

A variation of the 5-V output regulator application uses the LM317HV-MIL along with an NPN transistor to provide shutdown control. The NPN will either block or sink the current from the ADJ pin by responding to the TTL pin logic. When TTL is pulled high, the NPN is on and pulls the ADJ pin to GND, and the device outputs about 1.25 V. When TTL is pulled low, the NPN is off and the regulator outputs according to the programmed adjustable voltage.

Copyright © 2017, Texas Instruments Incorporated

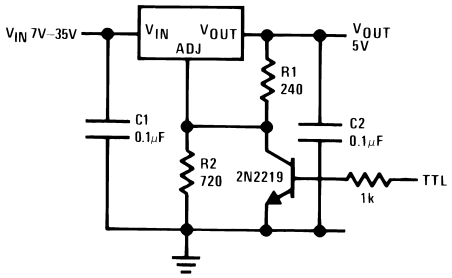

NOTE: *Min. output ≈ 1.2 V

Figure 19. Logic Regulator (5-V) With Electronic Shutdown

8.2.4 Slow Turnon 15-V Regulator

An application of LM317HV-MIL includes a PNP transistor with a capacitor to implement slow turnon functionality. As V_{IN} rises, the PNP sinks current from the ADJ rail. The output voltage at start-up is the addition of the 1.25-V reference plus the drop across the base to emitter. While this is happening, the capacitor begins to charge and eventually opens the PNP. At this point, the device functions normally, regulating the output at 15 V. A diode is placed between C1 and V_{OUT} to provide a path for the capacitor to discharge. Such controlled turnon is useful for limiting the in-rush current.

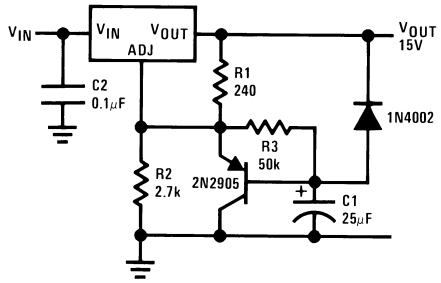

Figure 20. Slow Turnon 15-V Regulator

8.2.5 Adjustable Regulator With Improved Ripple Rejection

To improve ripple rejection, a capacitor is used to bypass the ADJ pin to GND. This is used to smooth output ripple by cleaning the feedback path and stopping unnecessary noise from being fed back into the device, propagating the noise.

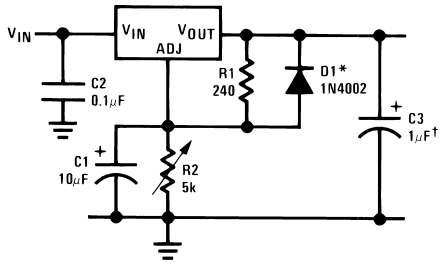

†Solid tantalum
*Discharges C1 if output is shorted to ground

Figure 21. Adjustable Regulator With Improved Ripple Rejection

8.2.6 High Stability 10-V Regulator

Using a high-stability shunt voltage reference in the feedback path, such as the LM329, provides damping necessary for a stable, low noise output.

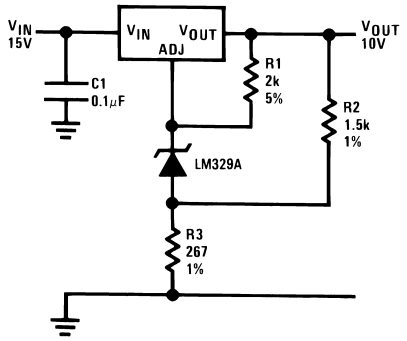

Figure 22. High Stability 10-V Regulator

8.2.7 High Current Adjustable Regulator

Using the LM195 power transistor in parallel with the LM317HV-MIL can increase the maximum possible output load current. Sense resistor R1 provides the 0.6 V across base to emitter to turn on the PNP. This on switch allows current to flow, and the voltage drop across R3 drives three LM195 power transistors designed to carry an excess of 1 A each. Note the selection of R1 determines a minimum load current for the PNP to turn on. The higher the resistor value, the lower the load current must be before the transistors turn on.

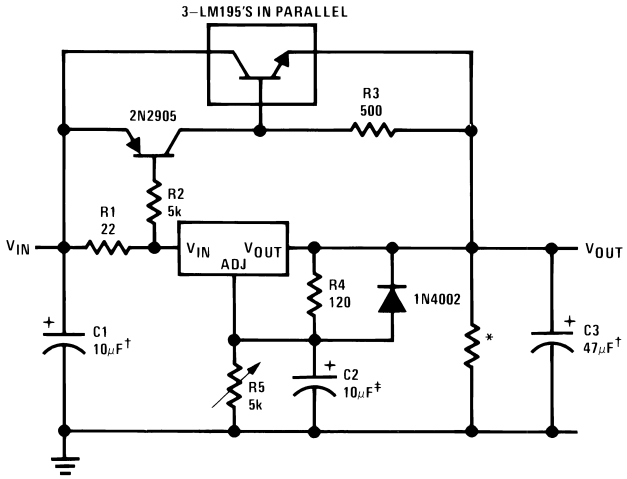

†Solid tantalum
*Minimum load current = 30 mA
‡Optional—improves ripple rejection

Figure 23. High Current Adjustable Regulator

8.2.8 Emitter Follower Current Amplifier

The device is used as a constant current source in this emitter follower circuit. The LM195 power transistor is being used as a current gain amplifier, boosting the INPUT current. The device provides a stable current bias than just using a resistor.

Copyright © 2017, Texas Instruments Incorporated

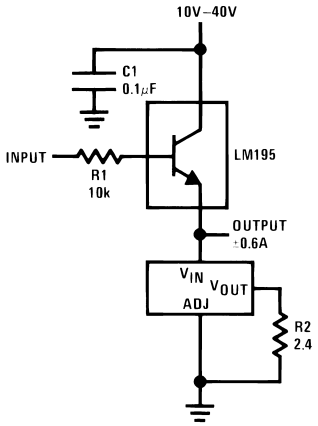

Figure 24. Emitter Follower Current Amplifier

8.2.9 1-A Current Regulator

A simple, fixed-current regulator can be made by placing a resistor between the V_{OUT} and ADJ pins of the LM317HV-MIL. By regulating a constant 1.25 V between these two terminals, a constant current is delivered to the load.

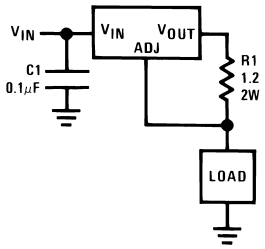

Figure 25. 1-A Current Regulator

8.2.10 Common Emitter Amplifier

Sometimes it is necessary to use a power transistor for high current gain. In this case, the LM317HV-MIL provides constant current at the collector of the LM195 in this common emitter application. The 1.25-V reference between V_{OUT} and ADJ is maintained across the 2.4-Ω resistor, providing about 500-mA constant bias current into the collector of the LM195.

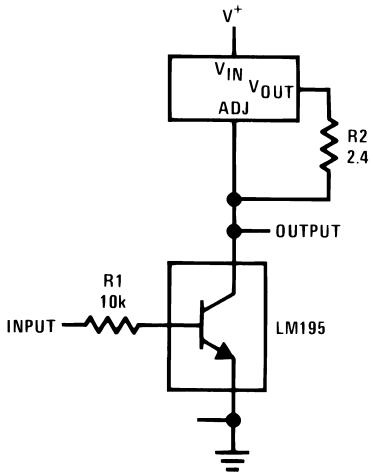

Figure 26. Common Emitter Amplifier

8.2.11 Low-Cost, 3-A Switching Regulator

The LM317HV-MIL can be used in a switching buck regulator application in cost-sensitive applications that require high efficiency. The switch node above D1 oscillates between ground and VIN, as the voltage across sense resistor R1 drives the power transistor on and off. This circuit exhibits self-oscillating behavior by negative feedback through R6 and C3 to the ADJ pin of the LM317HV-MIL.

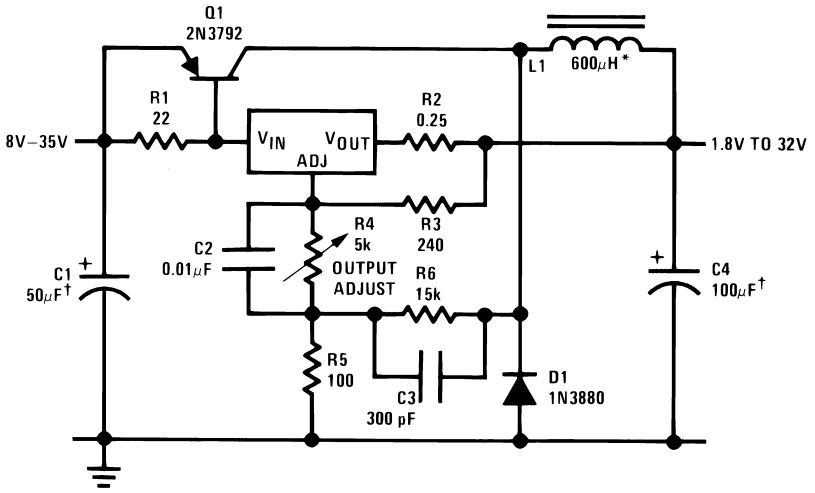

†Solid tantalum
*Core—Arnold A-254168-2 60 turns

Figure 27. Low-Cost, 3-A Switching Regulator

8.2.12 Adjustable Multiple On-Card Regulators With Single Control

This application shows how multiple LM317HV-MIL regulators can be controlled by setting one resistor. Because each device maintains the reference voltage of about 1.25 V between its V_{OUT} and ADJ pins, we can connect each ADJ rail to a single resistor, setting the same output voltage across all devices. This allows for independent outputs, each responding to its corresponding input only. Designers must also consider that by the nature of the circuit, changes to R1 and R2 affect all regulators.

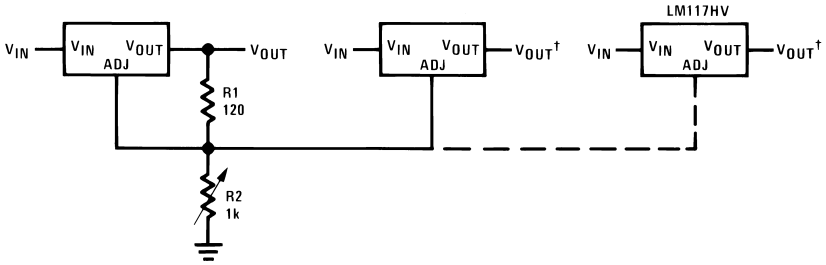

NOTE: *All outputs within ±100 mV
†Minimum load—10 mA

Figure 28. Adjustable Multiple On-Card Regulators With Single Control

Copyright © 2017, Texas Instruments Incorporated

8.2.13 AC Voltage Regulator

In Figure 29, the top regulator is +6 V above the bottom regulator. It is clear that when the input rises above +6 V plus the dropout voltage, only the top LM317HV-MIL regulates +6 V at the output. When the input falls below –6 V minus the dropout voltage, only the bottom LM317HV-MIL regulates –6 V at the output. For regions where the output is not clipped, there is no regulation taking place, so we see the output follow the input.

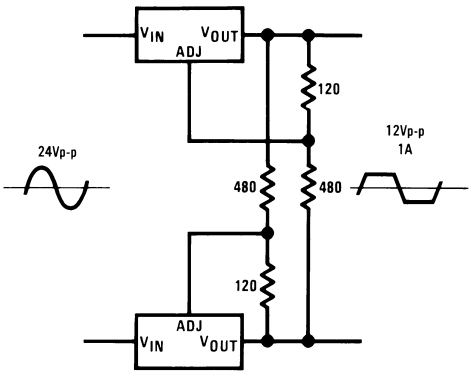

Figure 29. AC Voltage Regulator

8.2.14 12-V Battery Charger

The LM317HV-MIL can be used in a battery charger application, where the device maintains either constant voltage or constant current mode depending on the current charge of the battery. To do this, the part senses the voltage drop across the battery and delivers the maximum charging current necessary to charge the battery. When the battery charge is low, there exists a voltage drop across the sense resistor R_S, providing constant current to the battery at that instant. As the battery approaches full charge, the potential drop across R_S approaches zero, reducing the current and maintaining the fixed voltage of the battery.

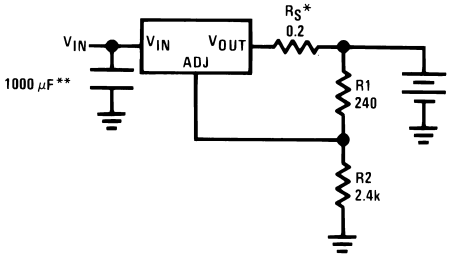

$$R_S - \textit{sets output impedance of charger } Z_{OUT} = R_S\left(1+\frac{R2}{R1}\right)$$

Use of R_S allows low charging rates with fully charged battery.
**The 1000 µF is recommended to filter out input transients

Figure 30. 12-V Battery Charger

8.2.15 Adjustable 4-A Regulator

Using three LM317HV-MIL devices in parallel increases load current capability. Output voltage is set by the variable resistor tied to the non-inverting terminal of the op amp, and reference current to the transistor is developed across the 100-Ω resistor. When output voltage rises, the op amp corrects by drawing current from the base, closing the transistor. This effectively pulls ADJ down and lowers the output voltage through negative feedback.

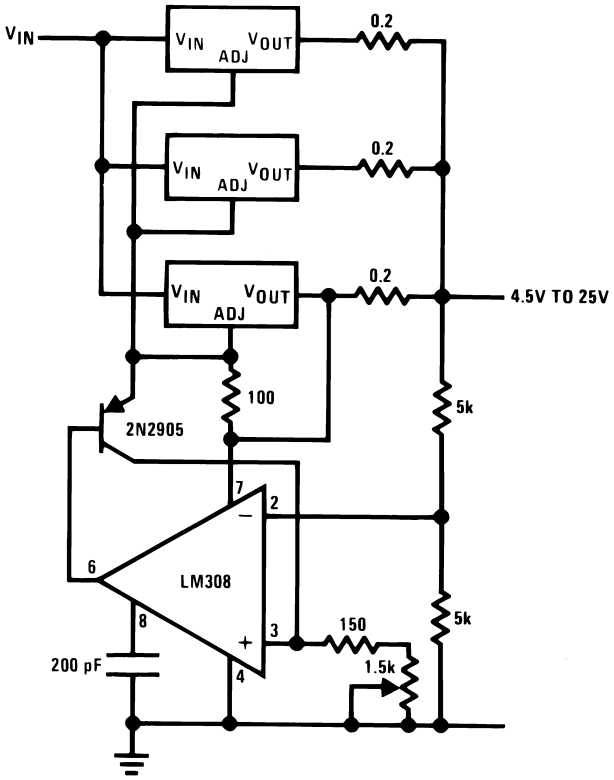

Figure 31. Adjustable 4-A Regulator

8.2.16 Current Limited 6-V Charger

The current in a battery charger application is limited by switching between constant current and constant voltage states. When the battery pulls low current, the drop across the 1-Ω resistor is not substantial and the NPN remains off. A constant voltage is seen across the battery, as regulated by the resistor divider. When current through the battery rises past peak current, the 1 Ω provides enough voltage to turn the transistor on, pulling ADJ close to ground. This results in limiting the maximum current to the battery.

Copyright © 2017, Texas Instruments Incorporated

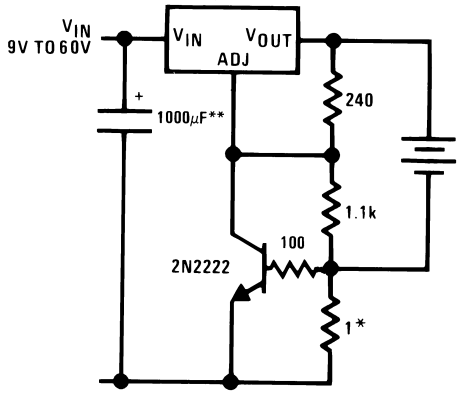

*Sets peak current (0.6 A for 1 Ω)
**The 1000 μF is recommended to filter out input transients

Figure 32. Current Limited 6-V Charger

9 Power Supply Recommendations

Normally, no capacitors are needed unless the device is situated more than six inches from the input filter capacitors, in which case an input bypass is needed. An optional output capacitor can be added to improve transient response. The adjustment terminal can be bypassed to achieve very high ripple rejections ratios, which are difficult to achieve with standard 3-terminal regulators. For information regarding capacitor selection, refer to *External Capacitors*.

10 Layout

10.1 Layout Guidelines

Some layout guidelines should be followed to ensure proper regulation of the output voltage with minimum noise. Traces carrying the load current should be wide to reduce the amount of parasitic trace inductance and the feedback loop from V_2 to ADJ should be kept as short as possible. To improve PSRR, a bypass capacitor can be placed at the ADJ pin and should be located as close as possible to the IC. In cases when VIN shorts to ground, an external diode should be placed from V_{OUT} to VIN to divert the surge current from the output capacitor and protect the IC. Similarly, in cases when a large bypass capacitor is placed at the ADJ pin and V_{OUT} shorts to ground, an external diode should be placed from ADJ to V_{OUT} to provide a path for the bypass capacitor to discharge. These diodes should be placed close to the corresponding IC pins to increase their effectiveness.

10.2 Layout Example

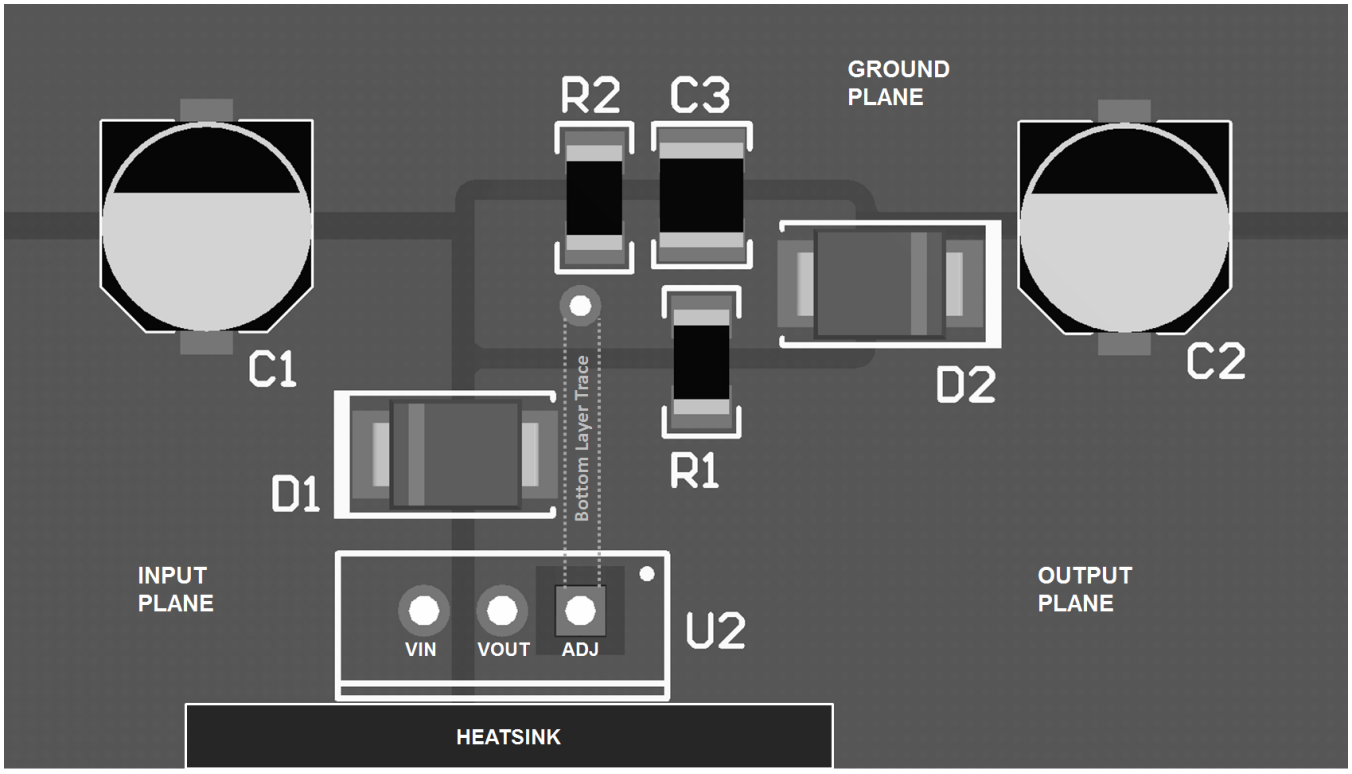

Figure 33. Layout Example (TO-220 Package)

Copyright © 2017, Texas Instruments Incorporated

11 Device and Documentation Support

11.1 Related Links

The table below lists quick access links. Categories include technical documents, support and community resources, tools and software, and quick access to sample or buy.

Table 1. Related Links

PARTS	PRODUCT FOLDER	SAMPLE & BUY	TECHNICAL DOCUMENTS	TOOLS & SOFTWARE	SUPPORT & COMMUNITY
LM317HV-MIL	Click here	Click here	Click here	Click here	Click here

11.2 Community Resources

The following links connect to TI community resources. Linked contents are provided "AS IS" by the respective contributors. They do not constitute TI specifications and do not necessarily reflect TI's views; see TI's Terms of Use.

TI E2E™ Online Community ***TI's Engineer-to-Engineer (E2E) Community.*** Created to foster collaboration among engineers. At e2e.ti.com, you can ask questions, share knowledge, explore ideas and help solve problems with fellow engineers.

Design Support ***TI's Design Support*** Quickly find helpful E2E forums along with design support tools and contact information for technical support.

11.3 Trademarks

E2E is a trademark of Texas Instruments.

11.4 Electrostatic Discharge Caution

These devices have limited built-in ESD protection. The leads should be shorted together or the device placed in conductive foam during storage or handling to prevent electrostatic damage to the MOS gates.

11.5 Glossary

SLYZ022 — *TI Glossary*.

This glossary lists and explains terms, acronyms, and definitions.

12 Mechanical, Packaging, and Orderable Information

The following pages include mechanical, packaging, and orderable information. This information is the most current data available for the designated devices. This data is subject to change without notice and revision of this document. For browser-based versions of this data sheet, refer to the left-hand navigation.

PACKAGING INFORMATION

Orderable part number	Status (1)	Material type (2)	Package | Pins	Package qty | Carrier	RoHS (3)	Lead finish/ Ball material (4)	MSL rating/ Peak reflow (5)	Op temp (°C)	Part marking (6)
LM317HVH	Active	Production	TO (NDT) | 3	500 | BULK	Yes	AU	Level-1-NA-UNLIM	0 to 0	(LM317HVHP+, LM317HVHP+)
LM317HVH/NOPB	Active	Production	TO (NDT) | 3	500 | BULK	Yes	AU	Level-1-NA-UNLIM	0 to 0	(LM317HVHP+, LM317HVHP+)
LM317HVK STEEL	Active	Production	TO-3 (NDS) | 2	50 | TRAY NON-STD	No	Call TI	Call TI	0 to 0	LM317HVK STEELP+
LM317HVK STEEL/NOPB	Active	Production	TO-3 (NDS) | 2	50 | TRAY NON-STD	Yes	Call TI	Level-1-NA-UNLIM	0 to 0	LM317HVK STEELP+

(1) **Status:** For more details on status, see our product life cycle.

(2) **Material type:** When designated, preproduction parts are prototypes/experimental devices, and are not yet approved or released for full production. Testing and final process, including without limitation quality assurance, reliability performance testing, and/or process qualification, may not yet be complete, and this item is subject to further changes or possible discontinuation. If available for ordering, purchases will be subject to an additional waiver at checkout, and are intended for early internal evaluation purposes only. These items are sold without warranties of any kind.

(3) **RoHS values:** Yes, No, RoHS Exempt. See the TI RoHS Statement for additional information and value definition.

(4) **Lead finish/Ball material:** Parts may have multiple material finish options. Finish options are separated by a vertical ruled line. Lead finish/Ball material values may wrap to two lines if the finish value exceeds the maximum column width.

(5) **MSL rating/Peak reflow:** The moisture sensitivity level ratings and peak solder (reflow) temperatures. In the event that a part has multiple moisture sensitivity ratings, only the lowest level per JEDEC standards is shown. Refer to the shipping label for the actual reflow temperature that will be used to mount the part to the printed circuit board.

(6) **Part marking:** There may be an additional marking, which relates to the logo, the lot trace code information, or the environmental category of the part.

Multiple part markings will be inside parentheses. Only one part marking contained in parentheses and separated by a "~" will appear on a part. If a line is indented then it is a continuation of the previous line and the two combined represent the entire part marking for that device.

Important Information and Disclaimer: The information provided on this page represents TI's knowledge and belief as of the date that it is provided. TI bases its knowledge and belief on information provided by third parties, and makes no representation or warranty as to the accuracy of such information. Efforts are underway to better integrate information from third parties. TI has taken and continues to take reasonable steps to provide representative and accurate information but may not have conducted destructive testing or chemical analysis on incoming materials and chemicals. TI and TI suppliers consider certain information to be proprietary, and thus CAS numbers and other limited information may not be available for release.

In no event shall TI's liability arising out of such information exceed the total purchase price of the TI part(s) at issue in this document sold by TI to Customer on an annual basis.

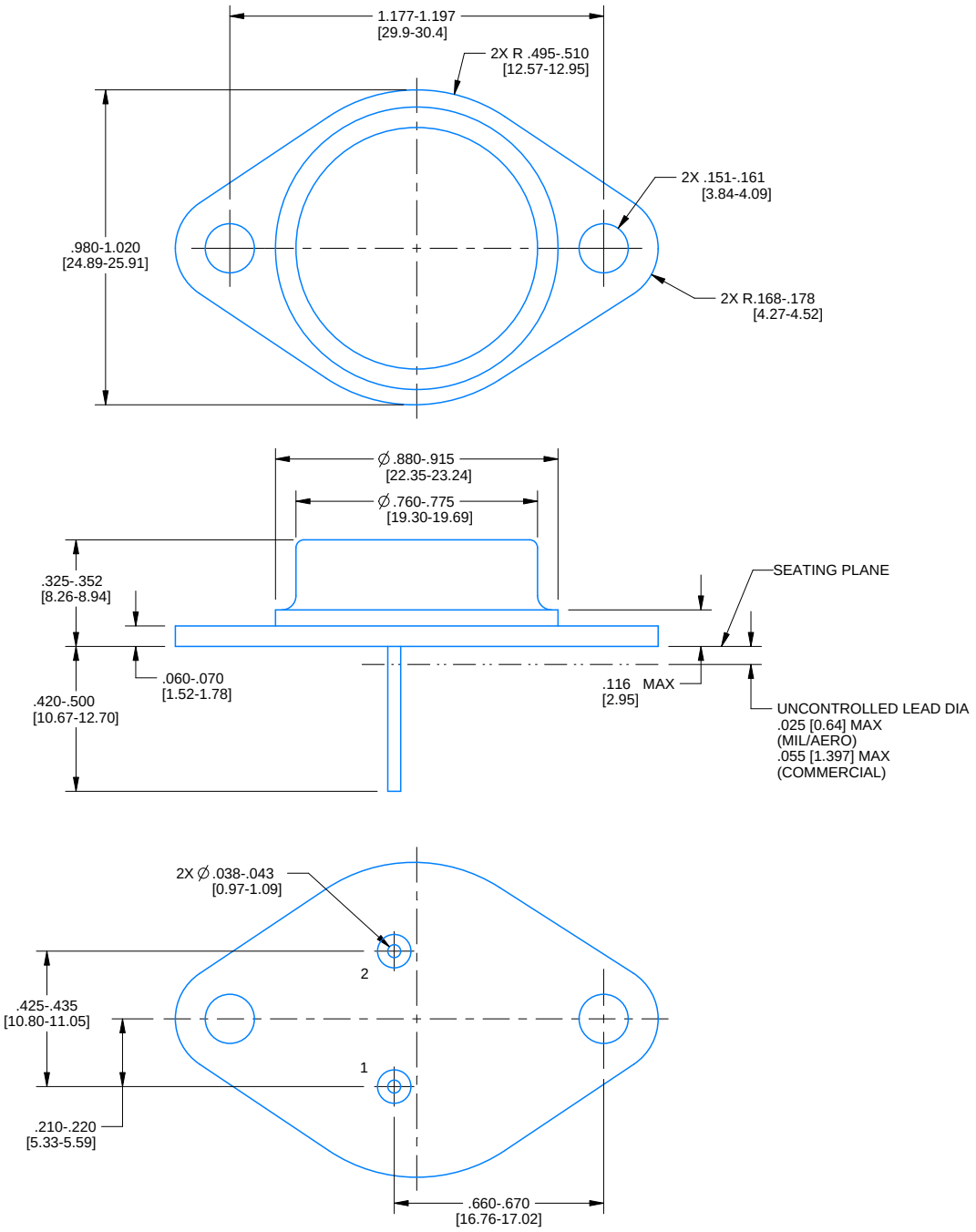

4214773/B 09/2024

NOTES:

1. Linear dimensions are in inches [millimeters]. Dimensions in parenthesis are for reference only. Controlling dimensions are in inches. Dimensioning and tolerancing per ASME Y14.5M.
2. This drawing is subject to change without notice.

NDT0003A

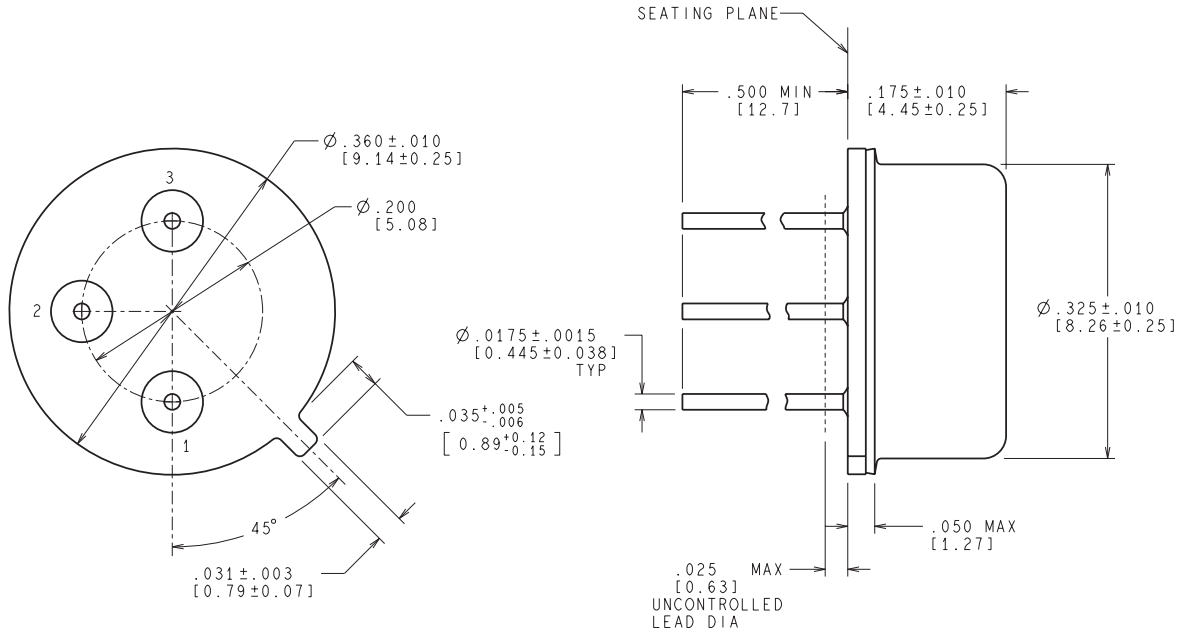

CONTROLLING DIMENSION IS INCH
VALUES IN [ ] ARE MILLIMETERS

MIL-PRF-38535
CONFIGURATION CONTROL

H03A (Rev D)

IMPORTANT NOTICE AND DISCLAIMER

TI PROVIDES TECHNICAL AND RELIABILITY DATA (INCLUDING DATA SHEETS), DESIGN RESOURCES (INCLUDING REFERENCE DESIGNS), APPLICATION OR OTHER DESIGN ADVICE, WEB TOOLS, SAFETY INFORMATION, AND OTHER RESOURCES “AS IS” AND WITH ALL FAULTS, AND DISCLAIMS ALL WARRANTIES, EXPRESS AND IMPLIED, INCLUDING WITHOUT LIMITATION ANY IMPLIED WARRANTIES OF MERCHANTABILITY, FITNESS FOR A PARTICULAR PURPOSE OR NON-INFRINGEMENT OF THIRD PARTY INTELLECTUAL PROPERTY RIGHTS.

These resources are intended for skilled developers designing with TI products. You are solely responsible for (1) selecting the appropriate TI products for your application, (2) designing, validating and testing your application, and (3) ensuring your application meets applicable standards, and any other safety, security, regulatory or other requirements.

These resources are subject to change without notice. TI grants you permission to use these resources only for development of an application that uses the TI products described in the resource. Other reproduction and display of these resources is prohibited. No license is granted to any other TI intellectual property right or to any third party intellectual property right. TI disclaims responsibility for, and you will fully indemnify TI and its representatives against, any claims, damages, costs, losses, and liabilities arising out of your use of these resources.

TI’s products are provided subject to TI’s Terms of Sale or other applicable terms available either on ti.com or provided in conjunction with such TI products. TI’s provision of these resources does not expand or otherwise alter TI’s applicable warranties or warranty disclaimers for TI products.

TI objects to and rejects any additional or different terms you may have proposed.

Mailing Address: Texas Instruments, Post Office Box 655303, Dallas, Texas 75265
Copyright © 2025, Texas Instruments Incorporated