LM48580 Boomer™ Audio Power Amplifier Series High Efficiency Class H, High Voltage, Haptic Piezo Actuator / Ceramic Speaker Driver

1 Features

- Class H Driver
- Integrated Boost Converter
- Bridge-tied Load Output
- Differential Input
- Three Pin-Programmable Gains
- Low Supply Current
- Minimum External components
- Micro-Power Shutdown
- Thermal Overload Protection
- Available in Space-Saving 12-bump DSBGA Package

2 Applications

- Touch Screen Smart Phones
- Tablet PCs
- Portable Electronic Devices
- MP3 Players
- Key Specifications:
  - Output Voltage at V_{DD} = 3.6V, R_L = 6µF + 10Ω, THD+N ≤ 1%
    -
  - $30V_{P-P}$ (Typical)
  - Quiescent Power Supply Current at 3.6V
    - 2.7mA (Typical)
  - Power Dissipation at $25V_{P-P}$
    - 800mW (Typical)
  - Shutdown Current
    - 0.1µA (Typical)

3 Description

The LM48580 is a fully differential, high voltage driver for piezo actuators and ceramic speakers for portable multi-media devices. Part of TI's Powerwise™ product line, the LM48580 Class H architecture offers significant power savings compared to traditional Class AB amplifiers. The device provides $30V_{P-P}$ output drive while consuming just 15mW of quiescent power.

The LM48580 is a single supply driver with an integrated boost converter which allows the device to deliver $30V_{P-P}$ from a single 3.6V supply.

The LM48580 has three pin-programmable gain settings and a low power Shutdown mode that reduces quiescent current consumption to 0.1µA. The LM48580 is available in an ultra-small 12-bump DSBGA package.

Device Information

PART NUMBER	PACKAGE(1)	PACKAGE SIZE (2)
LM48580	DSBGA	1.96mm x 1.46mm

(1) For all available packages, see Section 10.
(2) The package size (length × width) is a nominal value and includes pins, where applicable

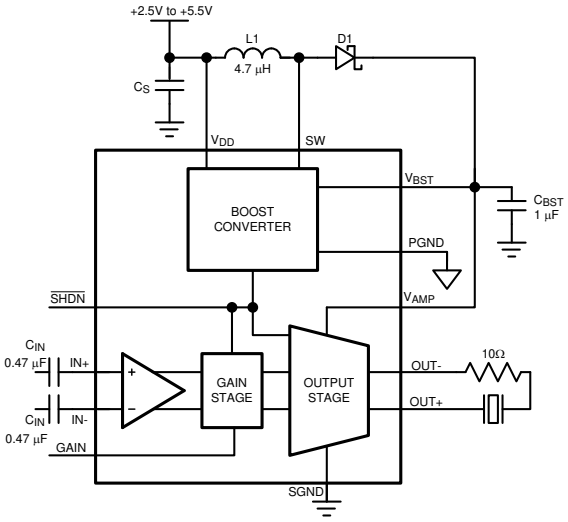

Copyright © 2018, Texas Instruments Incorporated

Typical Application

An IMPORTANT NOTICE at the end of this data sheet addresses availability, warranty, changes, use in safety-critical applications, intellectual property matters and other important disclaimers. PRODUCTION DATA.

Table of Contents

1 Features....1
2 Applications....1
3 Description....1
4 Pin Configuration and Functions....2
5 Specifications....4
5.1 Absolute Maximum Ratings....4
5.2 ESD Ratings....4
5.3 Recommended Operating Conditions....4
5.4 Thermal Information....4
5.5 Electrical Characteristics: V_{DD} = 3.6 V [(1)]....5
5.6 Typical Performance Characteristics....6
6 Detailed Description....9
6.1 Overview....9
6.2 Functional Block Diagram....9
6.3 Feature Description....9
6.4 Device Functional Modes....10
7 Application and Implementation....11
7.1 Application Information....11
7.2 Typical Application....11
7.3 Power Supply Recommendations....12
7.4 Layout....12
8 Device and Documentation Support....14
8.1 Device Support....14
8.2 Receiving Notification of Documentation Updates....14
8.3 Community Resources....14
8.4 Trademarks....14
9 Revision History....14
10 Mechanical, Packaging, and Orderable Information....14

4 Pin Configuration and Functions

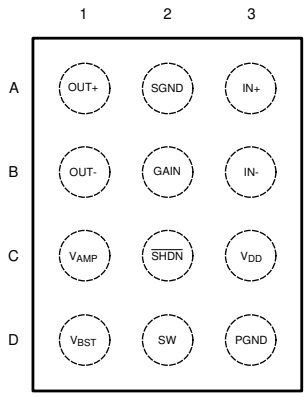

Figure 4-1. DSBGA Package YZR 12-Pin Top View

Copyright © 2025 Texas Instruments Incorporated

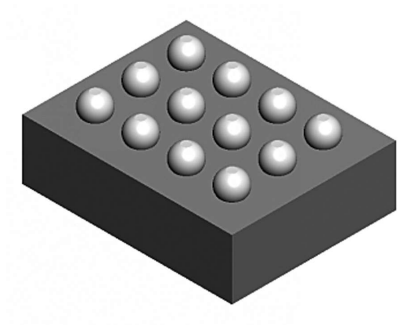

Figure 4-2. YZR0012 Package (Bumps Up) View

Table 4-1. Pin Functions

Bump	Name	Description
A1	OUT+	Amplifier Non-Inverting Output
A2	SGND	Amplifier Ground
A3	IN+	Amplifier Non-Inverting Input
B1	OUT-	Amplifier Inverting Output
B2	GAIN	Gain Select: GAIN = float: A_V = 18dB GAIN = GND: A_V = 24dB GAIN = V_{DD}: A_V = 30dB
B3	IN-	Amplifier Inverting Input
C1	V_{AMP}	Amplifier Supply Voltage. Connect to V_{BST}
C2	$\overline{SHDN}$	Active Low Shutdown. Drive $\overline{SHDN}$ low to disable device. Connect $\overline{SHDN}$ to V_{DD} for normal operation.
C3	V_{DD}	Power Supply
D1	V_{BST}	Boost Converter Output
D2	SW	Boost Converter Switching Node
D3	PGND	Boost Converter Ground

Copyright © 2025 Texas Instruments Incorporated

5 Specifications

5.1 Absolute Maximum Ratings

over operating free-air temperature range (unless otherwise noted)[1] [2]

	MIN	MAX	UNIT
Supply Voltage		6	V
SW Voltage		25	V
VBST Voltage		21	V
V_{AMP}		17	V
Input Voltage	−0.3	V_{DD} + 0.3	V
Storage temperature, T_{stg}	−65	150	°C
Junction Temperature		150	°C

(1) Stresses beyond those listed under *Absolute Maximum Ratings* may cause permanent damage to the device. These are stress ratings only, which do not imply functional operation of the device at these or any other conditions beyond those indicated under *Recommended Operating Conditions*. Exposure to absolute-maximum-rated conditions for extended periods may affect device reliability.
(2) If Military/Aerospace specified devices are required, please contact the Texas Instruments Sales Office/Distributors for availability and specifications.

5.2 ESD Ratings

			VALUE	UNIT
$V_{(ESD)}$	Electrostatic discharge	Human-body model (HBM), per ANSI/ESDA/JEDEC JS-001[1]	±2000	V
		Charged-device model (CDM), per JEDEC specification JESD22-C101[2]	±750	

(1) JEDEC document JEP155 states that 500-V HBM allows safe manufacturing with a standard ESD control process.
(2) JEDEC document JEP157 states that 250-V CDM allows safe manufacturing with a standard ESD control process.

5.3 Recommended Operating Conditions

over operating free-air temperature range (unless otherwise noted)

	MIN	NOM	MAX	UNIT
Temperature Range	−40	T_A	85	°C
Supply Voltage	2.5	V_{DD}	5.5	V

5.4 Thermal Information

THERMAL METRIC[1]		LM48580 YZR (DSBGA) 12 PINS	UNIT
$R_{\theta JA}$	Junction-to-ambient thermal resistance	82.1	°C/W
$R_{\theta JC(top)}$	Junction-to-case (top) thermal resistance	0.6	°C/W
$R_{\theta JB}$	Junction-to-board thermal resistance	20.6	°C/W
ψ_{JT}	Junction-to-top characterization parameter	0.4	°C/W
ψ_{JB}	Junction-to-board characterization parameter	20.7	°C/W
$R_{\theta JC(bot)}$	Junction-to-case (bottom) thermal resistance	n/a	°C/W

(1) For more information about traditional and new thermal metrics, see the *Semiconductor and IC Package Thermal Metrics* application report.

Copyright © 2025 Texas Instruments Incorporated

5.5 Electrical Characteristics: V_{DD} = 3.6 V [1]

The following specifications apply for R_L = 6 µF + 10Ω, C_{BST} = 1 µF, C_{IN} = 0.47 µF, A_V = 24 dB unless otherwise specified. Limits apply for T_A = 25°C.

PARAMETER		TEST CONDITIONS	Min [3]	Typ [2]	Max [3]	Unit
V_{DD}	Supply Voltage Range		2.5		5.5	V
I_{DD}	Quiescent Power Supply Current, V_{IN} = 0V, R_L = ∞	V_{DD} = 3.6V		2.7	4	mA
		V_{DD} = 3V		3		mA
P_D	Power Consumption V_{OUT} = 25$_{P-P}$, f = 200 Hz	V_{DD} = 3.6V		800		mW
		V_{DD} = 3V		830		mW
I_{SD}	Shutdown Current	Shutdown Enabled		0.5	2	µA
T_{WU}	Wake-up Time	From Shutdown	1	1.4	1.6	ms
V_{OS}	Differential Output Offset Voltage	V_{DD} = 3.6 V		63	360	mV
A_V	Gain	GAIN = FLOAT	17.5	18	18.5	dB
		GAIN = GND	23.5	24	24.5	dB
		GAIN = V_{DD}	29.5	30	30.5	dB
R_{IN}	Input Resistance		46	52	58	kΩ
R_{IN}	Gain Input Resistance	to GND			575	kΩ
		to V_{DD}			131	kΩ
V_{IN}	Maximum Input Voltage Range	A_V = 18dB			3	V_{P-P}
V_{OUT}	Output Voltage f = 200 Hz, THD+N = 1%	V_{DD} = 3.6 V	25	30.5		V_{P-P}
		V_{DD} = 3 V		30.5		V_{P-P}
	Output Voltage f = 2 kHz, THD+N = 5%	V_{DD} = 3.6 V		11		V_{P-P}
		V_{DD} = 3 V		8.5		V_{P-P}
THD+N	Total Harmonic Distortion + Noise	V_{OUT} = 25V_{P-P}, f = 200Hz		0.16%		
PSRR	Power Supply Rejection Ratio V_{DD} = 3.6 V + 200 mV_{p-p} sine, Inputs AC GND	f_{RIPPLE} = 217 Hz,		75		dB
		f_{RIPPLE} = 1 kHz		71		dB
CMRR	Common Mode Rejection Ratio V_{CM} = 200mV_{P-P} sine	f_{RIPPLE} = 217 Hz		56		dB
		f_{RIPPLE} = 1 kHz		55		dB
f_{SW}	Boost Converter Switching Frequency			2.1		MHz
I_{LIMIT}	Boost Converter Current Limit				1100	mA
V_{IH}	Logic High Input Threshold	$\overline{SHDN}$	1.2			V
V_{IL}	Logic Low Input Threshold	$\overline{SHDN}$			0.45	V
I_{IN}	Input Leakage Current	$\overline{SHDN}$		0.1	1	µA

(1) The *Electrical Characteristics* tables list ensured specifications under the listed *Recommended Operating Conditions* except as otherwise modified or specified by the *Electrical Characteristics Conditions* and/or Notes. Typical specifications are estimations only and are not ensured.
(2) Typical values represent most likely parametric norms at T_A = +25°C, and at the *Recommended Operation Conditions* at the time of product characterization and are not specified.
(3) Datasheet min/max specification limits are specified by design, test, or statistical analysis.

Copyright © 2025 Texas Instruments Incorporated

5.6 Typical Performance Characteristics

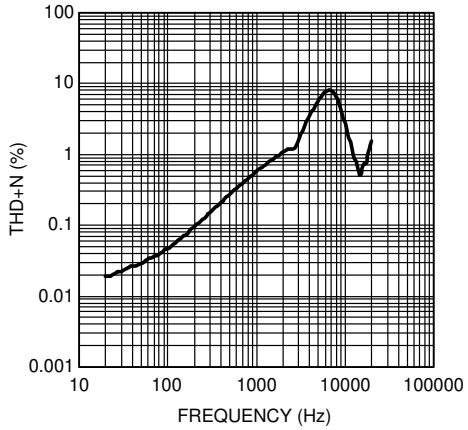

V_{DD} = 3.6 V V_{OUT} = 9 V_{P-P} R_L = 6 µF + 10 Ω

Figure 5-1. THD+N vs Frequency

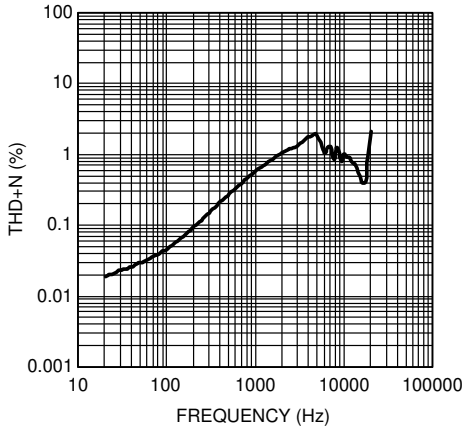

V_{DD} = 4.2 V V_{OUT} = 10 V_{P-P} R_L = 6 µF + 10 Ω

Figure 5-2. THD+N vs Frequency

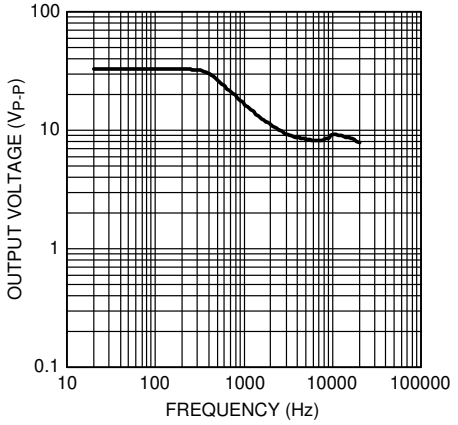

V_{DD} = 3.6 V THD+N = 5% R_L = 6 µF + 10 Ω

Figure 5-3. Output Voltage vs Frequency

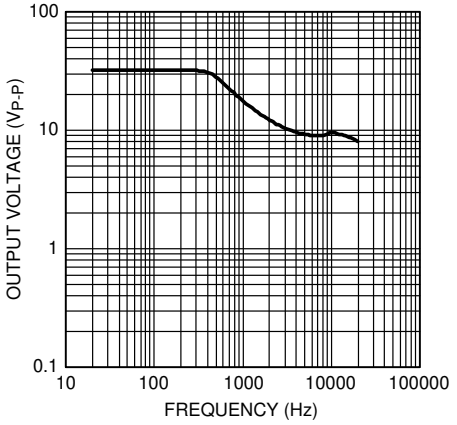

V_{DD} = 4.2 V THD+N = 5% R_L = 6 µF + 10 Ω

Figure 5-4. Output Voltage vs Frequency

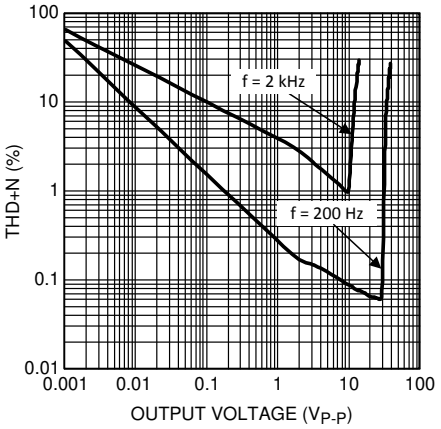

V_{DD} = 3.6 V R_L = 6 µF + 10 Ω

Figure 5-5. THD+N vs Output Voltage

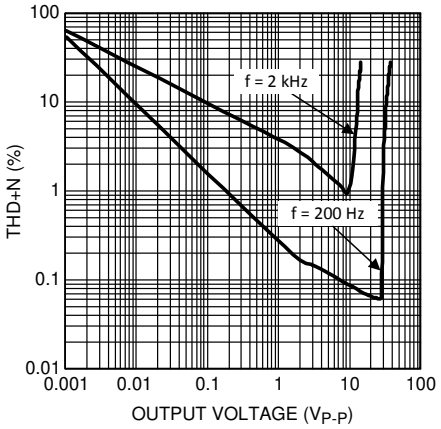

V_{DD} = 4.2 V R_L = 6 µF + 10 Ω

Figure 5-6. THD+N vs Output Voltage

Copyright © 2025 Texas Instruments Incorporated

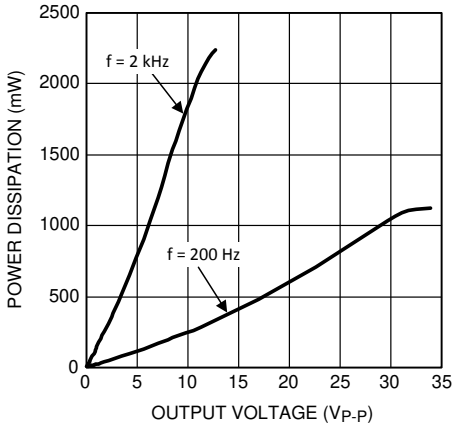

V_{DD} = 3.6 V R_L = 6 µF + 10 Ω

Figure 5-7. Power Consumption vs Output Voltage

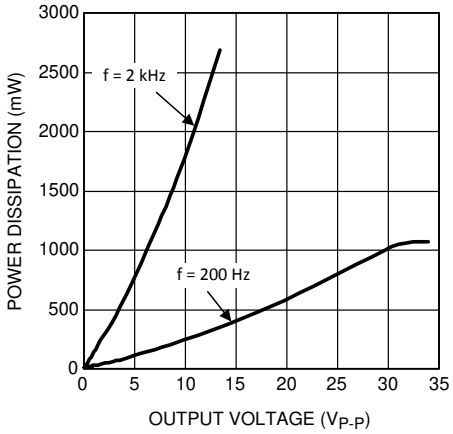

V_{DD} = 4.2 V R_L = 6 µF + 10 Ω

Figure 5-8. Power Consumption vs Output Voltage

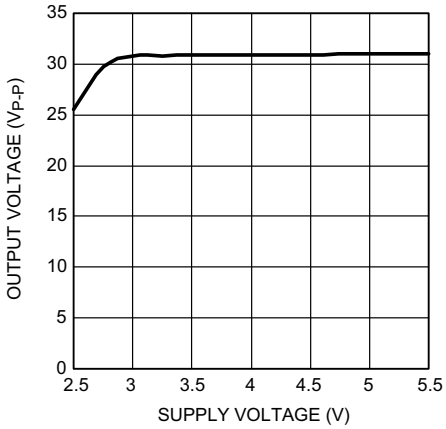

R_L = 6 µF + 10 Ω, f = 200 Hz

Figure 5-9. Output Voltage vs Supply Voltage

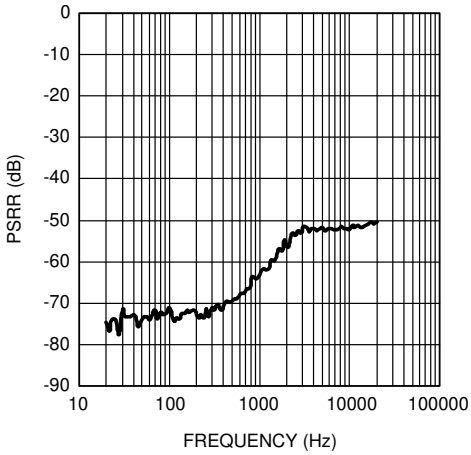

A. V_{DD} = 3.6 V f = 200 Hz R_L = 6 µF + 10 Ω, V_{RIPPLE} = 200 mV_{P-P}

Figure 5-10. PSRR vs Frequency

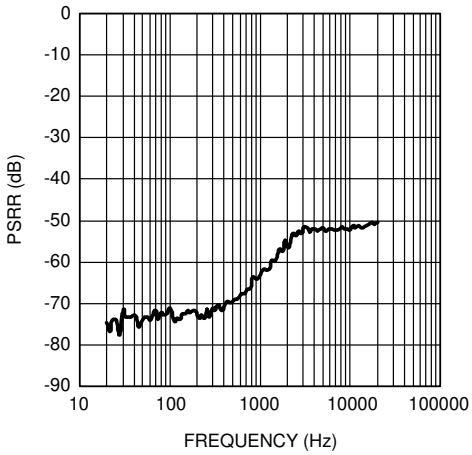

V_{DD} = 3.6 V V_{CM} = 1 V_{P-P} R_L = 6 µF + 10 Ω

Figure 5-11. CMRR vs Frequency

Parameter Measurement Information

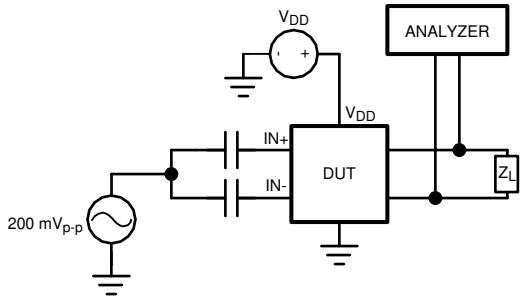

Copyright © 2018, Texas Instruments Incorporated

Figure 6-1. PSRR Test Circuit

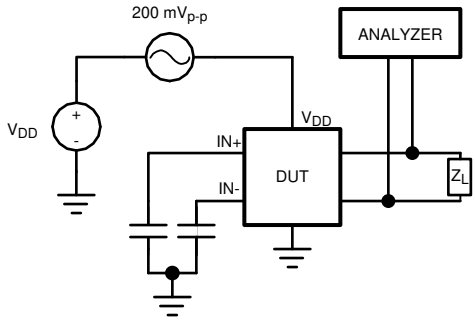

Copyright © 2018, Texas Instruments Incorporated

Figure 6-2. CMRR Test Circuit

Copyright © 2025 Texas Instruments Incorporated

6 Detailed Description

6.1 Overview

The LM48580 is a fully differential, Class H ceramic element driver for ceramic speakers and haptic actuators. The integrated, high efficiency boost converter dynamically adjusts the amplifier's supply voltage based on the output signal, increasing headroom and improving efficiency compared to a conventional Class AB driver. The fully differential amplifier takes advantage of the increased headroom and bridge-tied load (BTL) architecture, delivering significantly more voltage than a single-ended amplifier.

6.2 Functional Block Diagram

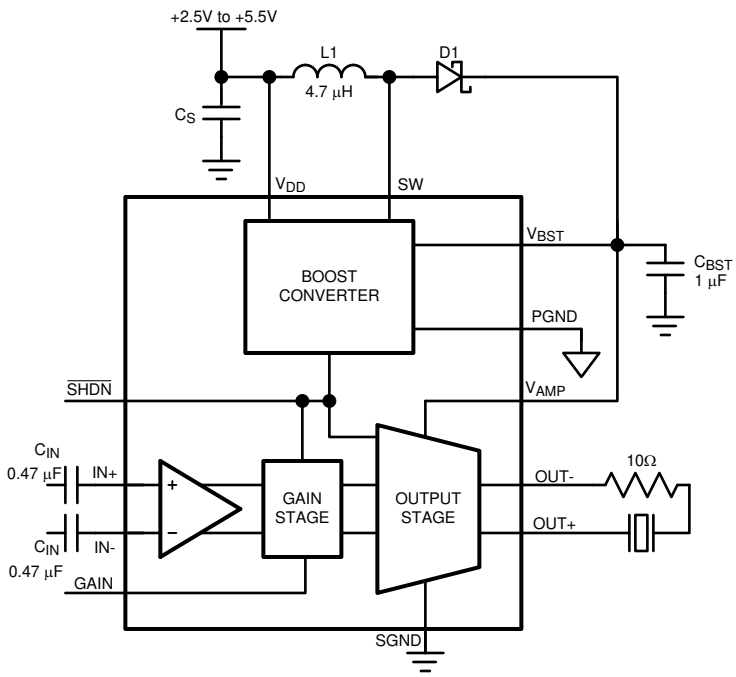

Copyright © 2018, Texas Instruments Incorporated

6.3 Feature Description

6.3.1 Class H Operation

Class H is a modification of another amplifier class (typically Class B or Class AB) to increase efficiency and reduce power dissipation. To decrease power dissipation, Class H uses a tracking power supply that monitors the output signal and adjusts the supply accordingly. When the amplifier output is below 3 V_{P-P}, the nominal boost voltage is 6 V. As the amplifier output increases above 3 V_{P-P}, the boost voltage tracks the amplifier output as shown in Figure 6-1. When the amplifier output falls below 3 V_{P-P}, the boost converter returns to its nominal output voltage. Power dissipation is greatly reduced compared to conventional Class AB drivers.

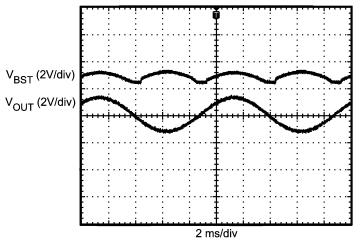

Figure 6-1. Class H Operation

6.3.2 Properties of Piezoelectric Elements

Piezoelectric elements such as ceramic speakers or piezoelectric haptic actuators are capacitive in nature. Due to their capacitive nature, piezoelectric elements appear as low impedance loads at high frequencies (typically above 5 kHz). A resistor in series with the piezoelectric element is required to ensure the amplifier does not see a short at high frequencies.

The value of the series resistor depends on the capacitance of the element, the frequency content of the output signal, and the desired frequency response. Higher valued resistors minimize power dissipation at high frequencies, but also impacts the frequency response. This configuration is suited for use with haptic actuators, where the majority of the signal content is typically below 2 kHz. Conversely, lower valued resistors maximize frequency response, while increasing power dissipation at high frequency. This configuration is ideal for ceramic speaker applications, where high frequency audio content needs to be reproduced. Resistor values are typically between 10 Ω and 20 Ω.

6.3.3 Differential Amplifier Explanation

The LM48580 features a fully differential amplifier. A differential amplifier amplifies the difference between the two input signals. A major benefit of the fully differential amplifier is the improved common mode rejection ratio (CMRR) over single ended input amplifiers. The increased CMRR of the differential amplifier reduces sensitivity to ground offset related noise injection, especially important in noisy systems.

6.3.4 Thermal Shutdown

The LM48580 features thermal shutdown that protects the device during thermal overload conditions. When the junction temperature exceeds +160°C, the device is disabled. The LM48580 remains disabled until the die temperature falls below the +160°C and $\overline{\text{SHDN}}$ is toggled.

6.3.5 Gain Setting

The LM48580 features three internally configured gain settings 18, 24, and 30 dB. The device gain is selected through a single pin (GAIN). The gain settings are shown in Table 6-1.

Table 6-1. Gain Setting

Gain	Gain Setting
FLOAT	18 dB
GND	24 dB
VDD	30 dB

6.4 Device Functional Modes

6.4.1 Shutdown Function

The LM48580 features a low current shutdown mode. Set $\overline{\text{SD}}$ = GND to disable the amplifier and boost converter and reduce supply current to 0.01µA.

Copyright © 2025 Texas Instruments Incorporated

7 Application and Implementation

Note

Information in the following applications sections is not part of the TI component specification, and TI does not warrant its accuracy or completeness. TI's customers are responsible for determining suitability of components for their purposes. Customers should validate and test their design implementation to confirm system functionality.

7.1 Application Information

7.2 Typical Application

The LM48580 is compatible with single-ended sources. When configured for single-ended inputs, input capacitors must be used to block and DC component at the input of the device. Figure 7-1 shows the typical single-ended applications circuit.

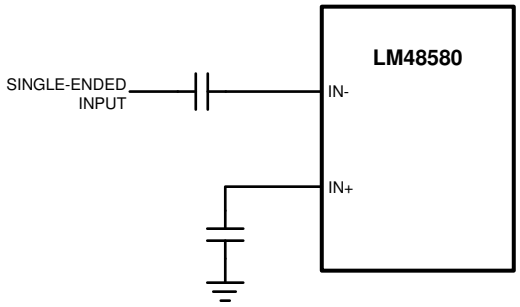

Copyright © 2018, Texas Instruments Incorporated

Figure 7-1. Single-Ended Configuration

7.2.1 Design Requirements

7.2.1.1 Proper Selection of External Components

7.2.1.1.1 Boost Converter Capacitor Selection

The LM48580 boost converter requires three external capacitors for proper operation: a 1 µF supply bypass capacitor, and 1 µF + 100 pF output reservoir capacitors. Place the supply bypass capacitor as close to V_{DD} as possible. Place the reservoir capacitors as close to VBST and VAMP as possible. Low ESR surface-mount multi-layer ceramic capacitors with X7R or X5R temperature characteristics are recommended. Select output capacitors with voltage rating of 25 V or higher. Tantalum, OS-CON and aluminum electrolytic capacitors are not recommended. See Table 7-1 for suggested capacitor manufacturers.

7.2.2 Detailed Design Procedure

7.2.2.1 Boost Converter Output Capacitor Selection

7.2.2.1.1 Inductor Selection

The LM48580 boost converter is designed for use with a 4.7 µH inductor. Table 7-1 lists various inductors and their manufacturers. Choose an inductor with a saturation current rating greater than the maximum operating peak current of the LM48580 (> 1 A). This ensures that the inductor does not saturate, preventing excess efficiency loss, over heating and possible damage to the inductor. Additionally, choose an inductor with the lowest possible DCR (series resistance) to further minimize efficiency losses.

Table 7-1. Recommended Inductors (1)

MANUFACTURER	PART#	INDUCTANCE/ISAT
Taiyo Yuden	BRL3225T4R7M	4.7 µH/1.1 A
Coilcraft	LP3015	4.7 µH/1.1 A

(1) See *Section 8.1.1*

7.2.2.1.2 Diode Selection

Use a Schottkey diode as shown in the *Functional Block Diagram*. A 20 V diode such as the NSR0520V2T1G from On Semiconductor is recommended. The NSR0520V2T1G is designed to handle a maximum average current of 500 mA.

7.2.2.2 Application Curves

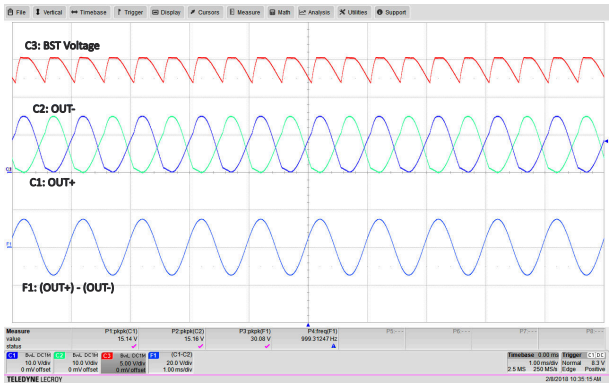

Figure 7-2. Full Scale Output 30 V_{PP} at 1 kHz

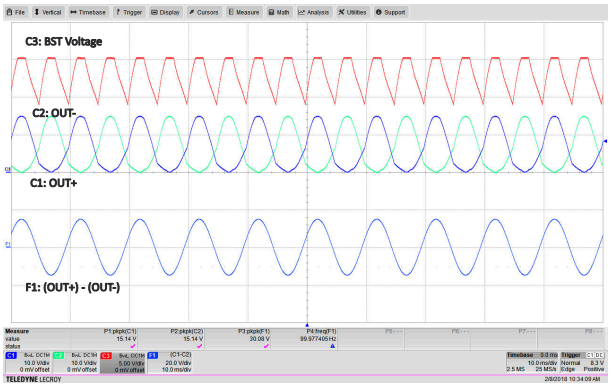

Figure 7-3. Full Scale Output 30 V_{PP} at 100 Hz

7.3 Power Supply Recommendations

The LM48580 device is designed be operate with a power supply between 2.5 V and 5.5 V. Proper power supply bypassing is critical for low noise performance and high PSRR. Place the supply bypass capacitors as close to the device as possible. Place a 1-µF ceramic capacitor from VDD to GND. Additional bulk capacitance may be added as required

7.4 Layout

7.4.1 Layout Guidelines

- Minimize trace impedance of the power, ground and all output traces for optimum performance.
- Voltage loss due to trace resistance between the LM48580 and the load results in decreased output power and efficiency.
- Trace resistance between the power supply and ground has the same effect as a poorly regulated supply, increased ripple and reduced peak output power.
- Use wide traces for power supply inputs and amplifier outputs to minimize losses due to trace resistance, as well as route heat away from the device.
- Proper grounding improves audio performance, minimizes crosstalk between channels and prevents switching noise from interfering with the audio signal.

Copyright © 2025 Texas Instruments Incorporated

- Use of power and ground planes is recommended.

Place all digital components and route digital signal traces as far as possible from analog components and traces. Do not run digital and analog traces in parallel on the same PCB layer. If digital and analog signal lines must cross either over or under each other, ensure that they cross in a perpendicular fashion.

7.4.2 Layout Example

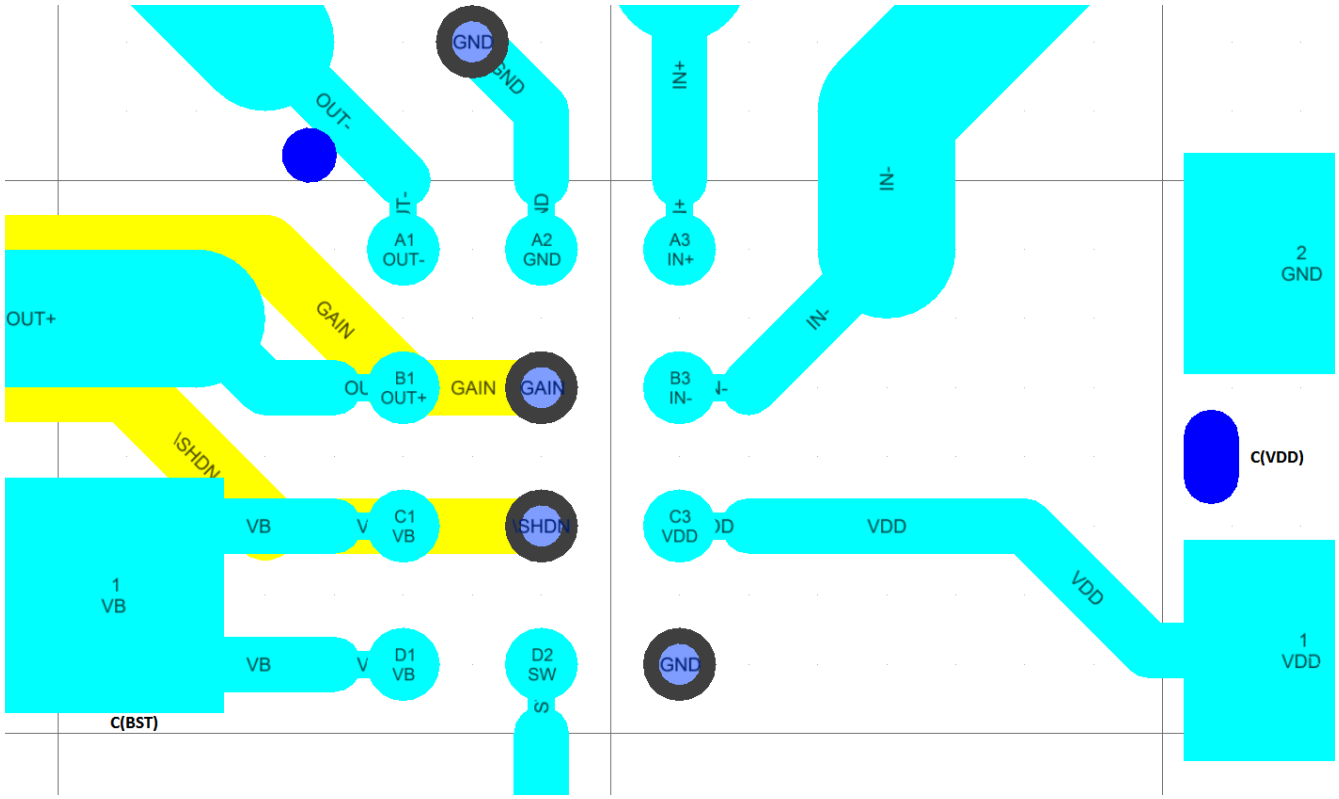

Figure 7-4. Example Layout

8 Device and Documentation Support

8.1 Device Support

8.1.1 Development Support

8.2 Receiving Notification of Documentation Updates

To receive notification of documentation updates, navigate to the device product folder on ti.com. In the upper right corner, click on *Alert me* to register and receive a weekly digest of any product information that has changed. For change details, review the revision history included in any revised document.

8.3 Community Resources

8.4 Trademarks

Boomer™ is a trademark of Texas Instruments.
Powerwise™ is a trademark of Texas Instruments.
All trademarks are the property of their respective owners.

9 Revision History

NOTE: Page numbers for previous revisions may differ from page numbers in the current version.

Changes from Revision B (February 2018) to Revision C (January 2025)	Page
• Updated Device Information table	1

Changes from Revision A (May 2013) to Revision B (February 2018)	Page
• Added *Device Information* table, *ESD* table, *Thermal Information* table, *Parameter Measurement Information*, *Feature Description*, *Device Functional Modes*, *Power Supply Recommendations*, *Layout* section, *Device and Documentation Support*, and *Mechanical, Packaging, and Orderable Information*	1
• Deleted the *Demoboard Bill of Materials* section	12
• Deleted the *Demo Board Schematic* section	12

Changes from Revision * (February 2010) to Revision A (May 2013)	Page
• Changed layout of National Data Sheet to TI format	1

10 Mechanical, Packaging, and Orderable Information

The following pages include mechanical, packaging, and orderable information. This information is the most current data available for the designated devices. This data is subject to change without notice and revision of this document. For browser-based versions of this data sheet, refer to the left-hand navigation.

Copyright © 2025 Texas Instruments Incorporated

YZR0012

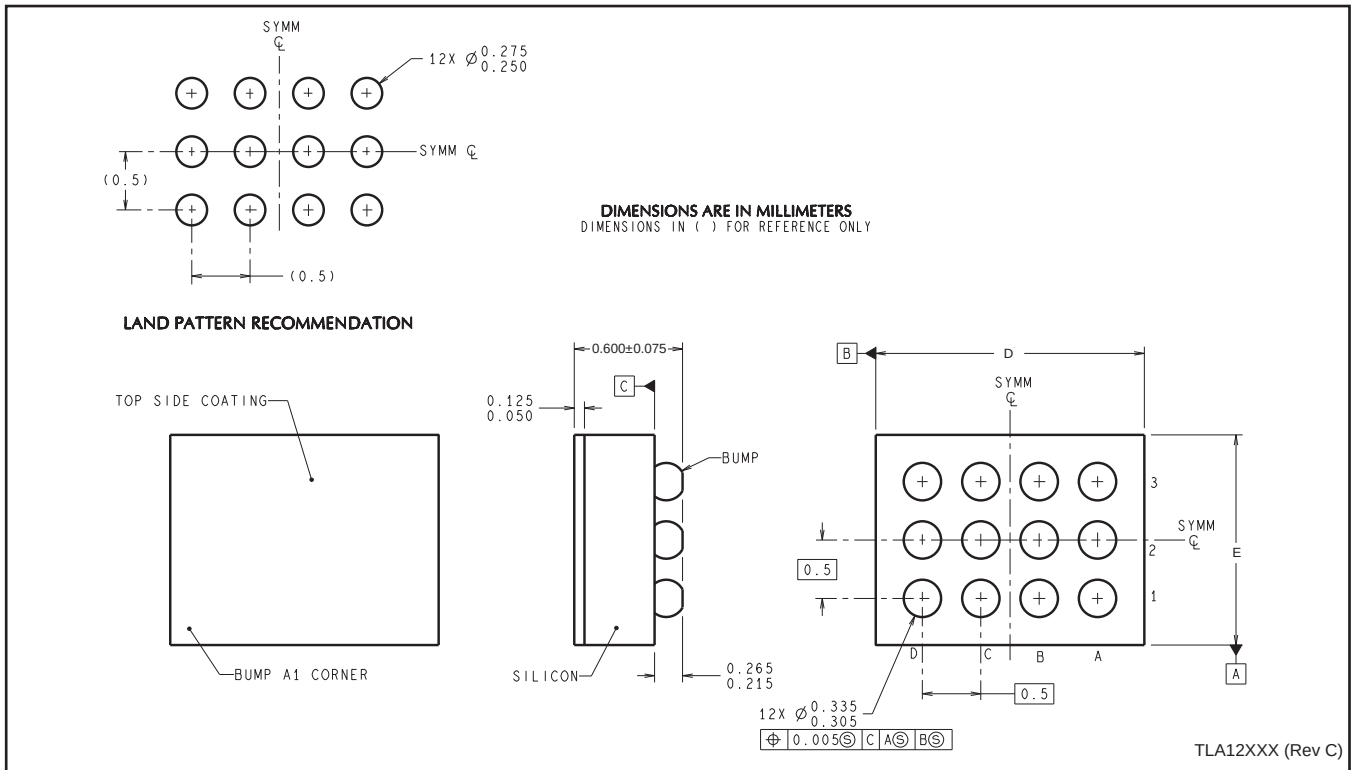

4215049/A 12/12

NOTES: A. All linear dimensions are in millimeters. Dimensioning and tolerancing per ASME Y14.5M-1994.
B. This drawing is subject to change without notice.

IMPORTANT NOTICE AND DISCLAIMER

TI PROVIDES TECHNICAL AND RELIABILITY DATA (INCLUDING DATA SHEETS), DESIGN RESOURCES (INCLUDING REFERENCE DESIGNS), APPLICATION OR OTHER DESIGN ADVICE, WEB TOOLS, SAFETY INFORMATION, AND OTHER RESOURCES “AS IS” AND WITH ALL FAULTS, AND DISCLAIMS ALL WARRANTIES, EXPRESS AND IMPLIED, INCLUDING WITHOUT LIMITATION ANY IMPLIED WARRANTIES OF MERCHANTABILITY, FITNESS FOR A PARTICULAR PURPOSE OR NON-INFRINGEMENT OF THIRD PARTY INTELLECTUAL PROPERTY RIGHTS.

These resources are intended for skilled developers designing with TI products. You are solely responsible for (1) selecting the appropriate TI products for your application, (2) designing, validating and testing your application, and (3) ensuring your application meets applicable standards, and any other safety, security, regulatory or other requirements.

These resources are subject to change without notice. TI grants you permission to use these resources only for development of an application that uses the TI products described in the resource. Other reproduction and display of these resources is prohibited. No license is granted to any other TI intellectual property right or to any third party intellectual property right. TI disclaims responsibility for, and you will fully indemnify TI and its representatives against, any claims, damages, costs, losses, and liabilities arising out of your use of these resources.

TI’s products are provided subject to TI’s Terms of Sale or other applicable terms available either on ti.com or provided in conjunction with such TI products. TI’s provision of these resources does not expand or otherwise alter TI’s applicable warranties or warranty disclaimers for TI products.

TI objects to and rejects any additional or different terms you may have proposed.

Mailing Address: Texas Instruments, Post Office Box 655303, Dallas, Texas 75265
Copyright © 2025, Texas Instruments Incorporated