MSP430F673x, MSP430F672x Mixed-Signal Microcontrollers

1 Device Overview

1.1 Features

- Low Supply Voltage Range:
  3.6 V Down to 1.8 V
- Ultra-Low Power Consumption
  - Active Mode (AM):
    All System Clocks Active
    265 µA/MHz at 8 MHz, 3.0 V, Flash Program Execution (Typical)
    140 µA/MHz at 8 MHz, 3.0 V, RAM Program Execution (Typical)
  - Standby Mode (LPM3):
    Real-Time Clock (RTC) With Crystal, Watchdog, and Supply Supervisor Operational, Full RAM Retention, Fast Wakeup:
    1.7 µA at 2.2 V, 2.5 µA at 3.0 V (Typical)
  - Off Mode (LPM4):
    Full RAM Retention, Supply Supervisor Operational, Fast Wakeup:
    1.6 µA at 3.0 V (Typical)
  - Shutdown RTC Mode (LPM3.5):
    Shutdown Mode, Active Real-Time Clock (RTC) With Crystal:
    1.24 µA at 3.0 V (Typical)
  - Shutdown Mode (LPM4.5):
    0.78 µA at 3.0 V (Typical)
- Wake up From Standby Mode in 3 µs (Typical)
- 16-Bit RISC Architecture, Extended Memory, up to 25-MHz System Clock
- Flexible Power Management System
  - Fully Integrated LDO With Programmable Regulated Core Supply Voltage
  - Supply Voltage Supervision, Monitoring, and Brownout
  - System Operation From up to Two Auxiliary Power Supplies
- Unified Clock System
  - FLL Control Loop for Frequency Stabilization
  - Low-Power Low-Frequency Internal Clock Source (VLO)
  - Low-Frequency Trimmed Internal Reference Source (REFO)
  - 32-kHz Crystals (XT1)
- One 16-Bit Timer With Three Capture/Compare Registers
- Three 16-Bit Timers With Two Capture/Compare Registers Each
- Enhanced Universal Serial Communication Interfaces
  - eUSCI_A0, eUSCI_A1, and eUSCI_A2
    - Enhanced UART Supports Automatic Baud-Rate Detection
    - IrDA Encoder and Decoder
    - Synchronous SPI
  - eUSCI_B0
    - I^2C With Multiple Slave Addressing
    - Synchronous SPI
- Password-Protected RTC With Crystal Offset Calibration and Temperature Compensation
- Separate Voltage Supply for Backup Subsystem
  - 32-kHz Low-Frequency Oscillator (XT1)
  - Real-Time Clock
  - Backup Memory (4 × 16 Bits)
- Three 24-Bit Sigma-Delta Analog-to-Digital Converters (ADCs) With Differential PGA Inputs
- Integrated LCD Driver With Contrast Control for up to 320 Segments in 8-Mux Mode
- Hardware Multiplier Supports 32-Bit Operations
- 10-Bit 200-ksps ADC
  - Internal Reference
  - Sample-and-Hold, Autoscan Feature
  - Up to Six External Channels and Two Internal Channels, Including Temperature Sensor
- 3-Channel Internal DMA
- Serial Onboard Programming, No External Programming Voltage Needed
- Single-Phase Electronic Watt-Hour Meter Development Tool (Also See Tools and Software)
  - EVM430-F6736 - MSP430F6736 EVM for Metering
  - Energy Measurement Design Center for MSP430™ MCUs
- Device Comparison Summarizes the Available Family Members
- Available in 100-Pin and 80-Pin LQFP Packages

An IMPORTANT NOTICE at the end of this data sheet addresses availability, warranty, changes, use in safety-critical applications, intellectual property matters and other important disclaimers. PRODUCTION DATA.

1.2 Applications

- 2-Wire Single-Phase Metering
- 3-Wire Single-Phase Metering
- Tamper-Resistant Meters

1.3 Description

The TI MSP family of ultra-low-power microcontrollers consists of several devices featuring different sets of peripherals targeted for various applications. The architecture, combined with extensive low-power modes, is optimized to achieve extended battery life in portable measurement applications. The device features a powerful 16-bit RISC CPU, 16-bit registers, and constant generators that contribute to maximum code efficiency. The digitally controlled oscillator (DCO) allows the device to wake up from low-power modes to active mode in 3 µs (typical).

The MSP430F673x and MSP430F672x microcontrollers feature up to three high-performance 24-bit sigma-delta ADCs, a 10-bit ADC, four enhanced universal serial communication interfaces (three eUSCI_A modules and one eUSCI_B module), four 16-bit timers, a hardware multiplier, a DMA module, an RTC module with alarm capabilities, an LCD driver with integrated contrast control, an auxiliary supply system, and up to 72 I/O pins in the 100-pin devices and 52 I/O pins in the 80-pin devices.

For complete module descriptions, see the *MSP430F5xx and MSP430F6xx Family User's Guide*.

Device Information(1)

PART NUMBER	PACKAGE	BODY SIZE(2)
MSP430F6736IPZ	LQFP (100)	14 mm × 14 mm
MSP430F6736IPN	LQFP (80)	12 mm × 12 mm

(1) For the most current part, package, and ordering information, see the *Package Option Addendum* in Section 8, or see the TI website at www.ti.com.
(2) The sizes shown here are approximations. For the package dimensions with tolerances, see the *Mechanical Data* in Section 8.

Copyright © 2011–2018, Texas Instruments Incorporated

1.4 Functional Block Diagrams

Figure 1-1 shows the functional block diagram for all device variants in the PZ package.

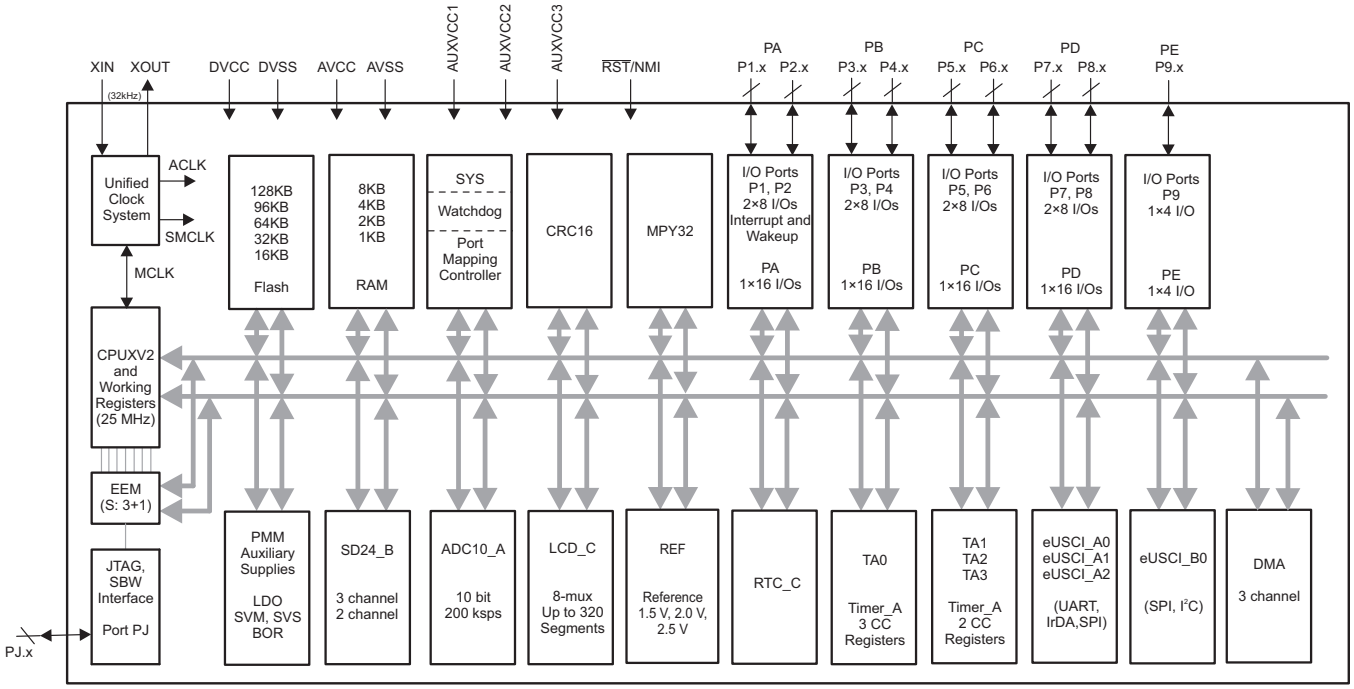

Figure 1-1. Functional Block Diagram - MSP430F673xIPZ and MSP430F672xIPZ

Figure 1-2 shows the functional block diagram for all device variants in the PN package.

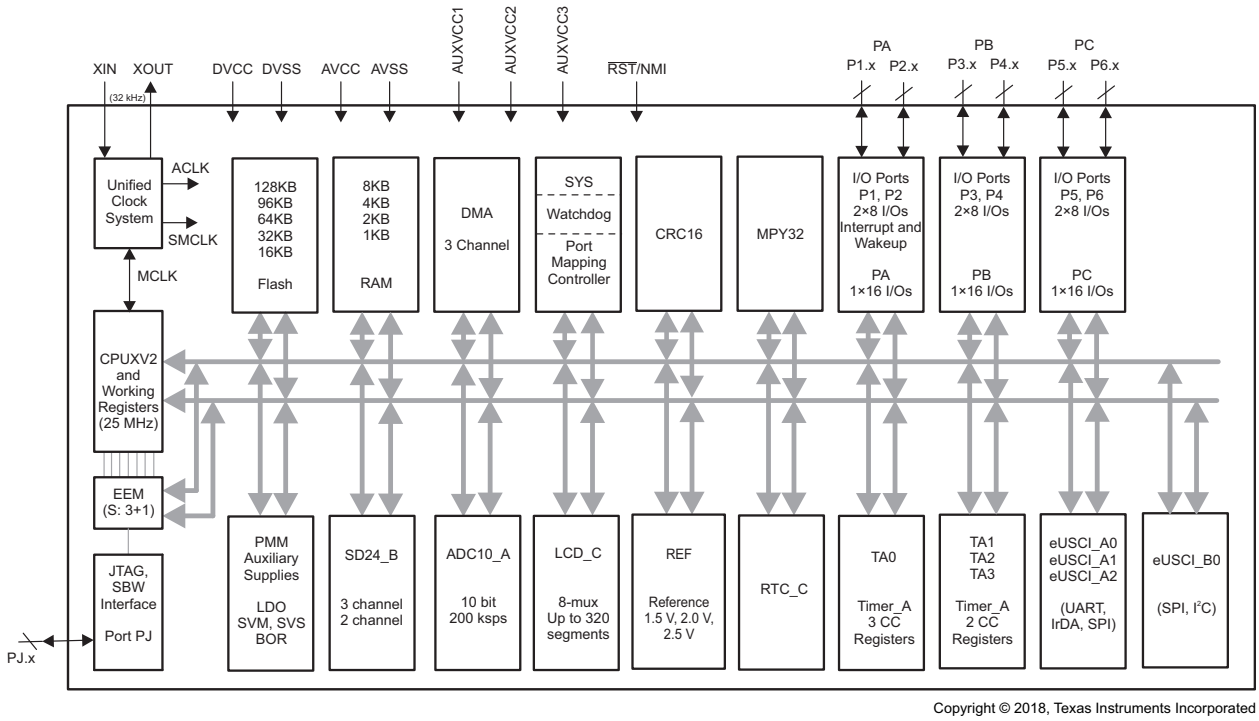

Figure 1-2. Functional Block Diagram - MSP430F673xIPN and MSP430F672xIPN

Table of Contents

1 Device Overview 1
- 1.1 Features 1
- 1.2 Applications 2
- 1.3 Description 2
- 1.4 Functional Block Diagrams 3

2 Revision History 5

3 Device Comparison 6
- 3.1 Related Products 7

4 Terminal Configuration and Functions 8
- 4.1 Pin Diagrams 8
- 4.2 Signal Descriptions 12

5 Specifications 24
- 5.1 Absolute Maximum Ratings 24
- 5.2 ESD Ratings 24
- 5.3 Recommended Operating Conditions 24
- 5.4 Active Mode Supply Current Into V_{CC} Excluding External Current 26
- 5.5 Low-Power Mode Supply Currents (Into V_{CC}) Excluding External Current 27
- 5.6 Low-Power Mode With LCD Supply Currents (Into V_{CC}) Excluding External Current 28
- 5.7 Thermal Resistance Characteristics 29
- 5.8 Digital I/O Ports 30
- 5.9 Clock Specifications 35
- 5.10 Power-Management Module (PMM) 38
- 5.11 Auxiliary Supplies 41
- 5.12 Timer_A 44
- 5.13 eUSCI 44
- 5.14 LCD Controller 50
- 5.15 SD24_B 52
- 5.16 ADC10_A 59
- 5.17 REF 61
- 5.18 Flash Memory 62
- 5.19 Emulation and Debug 62

6 Detailed Description 63
- 6.1 CPU 63
- 6.2 Instruction Set 64
- 6.3 Operating Modes 65
- 6.4 Interrupt Vector Addresses 66
- 6.5 Memory Organization 67
- 6.6 Bootloader (BSL) 69
- 6.7 JTAG Operation 69
- 6.8 Flash Memory 70
- 6.9 RAM 70
- 6.10 Backup RAM 70
- 6.11 Peripherals 71
- 6.12 Input/Output Diagrams 95
- 6.13 Device Descriptors (TLV) 127

7 Device and Documentation Support 129
- 7.1 Getting Started and Next Steps 129
- 7.2 Device Nomenclature 129
- 7.3 Tools and Software 131
- 7.4 Documentation Support 133
- 7.5 Related Links 134
- 7.6 Community Resources 134
- 7.7 Trademarks 134
- 7.8 Electrostatic Discharge Caution 135
- 7.9 Export Control Notice 135
- 7.10 Glossary 135

8 Mechanical, Packaging, and Orderable Information 136

Copyright © 2011–2018, Texas Instruments Incorporated

2 Revision History

NOTE: Page numbers for previous revisions may differ from page numbers in the current version.

Changes from February 28, 2013 to September 28, 2018 **Page**

- Document format and organization changes throughout, including addition of section numbering 1
- Added links to development tool and design center in , *Features* 1
- Added *Device Information* table 2
- Corrected the names of the AUXVCC1, AUXVCC2, and AUXVCC3 pins in Section 1.4, *Functional Block Diagrams* . 3
- Added Section 3 and moved Table 3-1 to it 6
- Added Section 3.1, *Related Products* 7
- Added note to $\overline{\text{RST}}$/NMI/SBWTDIO pin in Table 4-3, *Terminal Functions, PZ Package* 17
- Added note to $\overline{\text{RST}}$/NMI/SBWTDIO pin in Table 4-4, *Terminal Functions, PN Package* 22
- Added typical conditions statements at the beginning of Section 5, *Specifications* 24
- Moved all electrical specifications to Section 5, *Specifications* 24
- Added SD24_B input pins and AUXVCCx pins to exception list on "Voltage applied to pins" parameter, and added SD24_B input pin limits in "Diode current at pins" parameter in Section 5.1, *Absolute Maximum Ratings* 24
- Added Section 5.2, *ESD Ratings* 24
- Added note on C_{VCORE} in Section 5.3, *Recommended Operating Conditions* 24
- Added Section 5.7, *Thermal Resistance Characteristics* 29
- Added note to R_{Pull} in Table 5-1, *Schmitt-Trigger Inputs – General-Purpose I/O* 30
- Changed TYP value of $C_{L,eff}$ with Test Conditions of "XTS = 0, XCAPx = 0" from 2 pF to 1 pF in Table 5-7, *Crystal Oscillator, XT1, Low-Frequency Mode* 35
- Corrected the formula in note (1) [added "/ (85ºC – (–40ºC)"] in Table 5-8, *Internal Very-Low-Power Low-Frequency Oscillator (VLO)* 36
- Corrected the formula in note (1) [added "/ (85ºC – (–40ºC)"] in Table 5-9, *Internal Reference, Low-Frequency Oscillator (REFO)* 36
- Changed the MIN value of the $V_{(DVCC_BOR_hys)}$ parameter from 60 mV to 50 mV in Table 5-11, *PMM, Brownout Reset (BOR)* 38
- Updated notes (1) and (2) and added note (3) in Table 5-17, *Wake-up Times From Low-Power Modes and Reset* 40
- Corrected the names of the AUXVCC1, AUXVCC2, and AUXVCC3 pins in Auxiliary Supplies section 41
- Corrected the name of the AUXCHCx bit in the Test Conditions of Table 5-25, *Auxiliary Supplies, Charge Limiting Resistor* 43
- Replaced f_{Frame} parameter with f_{LCD}, $f_{FRAME,4mux}$, and $f_{FRAME,8mux}$ parameters in Table 5-33, *LCD_C Recommended Operating Conditions* 50
- Removed ADC10DIV from the formula for the TYP value in the second row of the $t_{CONVERT}$ parameter in Table 5-44, *10-Bit ADC, Timing Parameters*, because ADC10CLK is after division 59
- Updated Test Conditions for all parameters in Table 5-45, *10-Bit ADC, Linearity Parameters*: Changed from "C_{VREF+} = 20 pF" to "C_{VeREF+} = 20 pF"; Changed from "$(V_{eREF+} – V_{eREF–})$min ≤ $(V_{eREF+} – V_{eREF–})$" to "1.4 V ≤ $(V_{eREF+} – V_{eREF–})$"; Added "C_{VeREF+} = 20 pF" to E_I Test Conditions 60
- Added "ADC10SREFx = 11b" to Test Conditions for E_G and E_T in Table 5-45 60
- Throughout document, changed all instances of "bootstrap loader" to "bootloader" 69
- Corrected spelling of NMIIFG in Table 6-11, *System Module Interrupt Vector Registers* 75
- Removed mention of real-time clock mode (also called counter mode) in Section 6.11.21, *Real-Time Clock (RTC_C)* (feature is not supported in this device) 80
- Removed SD24BTRGCTL, SD24BTRGOSR, and SD24BTRGPRE registers (not supported) in Table 6-55, *SD24_B Registers* 93
- Added Section 7, *Device and Documentation Support*, and moved *Device and Development Tool Nomenclature* and *Trademarks* sections to it 129
- Replaced former section *Development Tools Support* with Section 7.3, *Tools and Software* 131
- Added Section 8, *Mechanical, Packaging, and Orderable Information* 136

Copyright © 2011–2018, Texas Instruments Incorporated

3 Device Comparison

Table 3-1 summarizes the available family members.

Table 3-1. Family Members(1)(2)

DEVICE	FLASH (KB)	SRAM (KB)	SD24_B CONVERTERS	ADC10_A CHANNELS	Timer_A(3)	eUSCI_A: UART, IrDA, SPI	eUSCI_B: SPI, I²C	I/Os	PACKAGE
MSP430F6736IPZ	128	8	3	6 ext, 2 int	3, 2, 2, 2	3	1	72	100 PZ
MSP430F6735IPZ	128	4	3	6 ext, 2 int	3, 2, 2, 2	3	1	72	100 PZ
MSP430F6734IPZ	96	4	3	6 ext, 2 int	3, 2, 2, 2	3	1	72	100 PZ
MSP430F6733IPZ	64	4	3	6 ext, 2 int	3, 2, 2, 2	3	1	72	100 PZ
MSP430F6731IPZ	32	2	3	6 ext, 2 int	3, 2, 2, 2	3	1	72	100 PZ
MSP430F6730IPZ	16	1	3	6 ext, 2 int	3, 2, 2, 2	3	1	72	100 PZ
MSP430F6726IPZ	128	8	2	6 ext, 2 int	3, 2, 2, 2	3	1	72	100 PZ
MSP430F6725IPZ	128	4	2	6 ext, 2 int	3, 2, 2, 2	3	1	72	100 PZ
MSP430F6724IPZ	96	4	2	6 ext, 2 int	3, 2, 2, 2	3	1	72	100 PZ
MSP430F6723IPZ	64	4	2	6 ext, 2 int	3, 2, 2, 2	3	1	72	100 PZ
MSP430F6721IPZ	32	2	2	6 ext, 2 int	3, 2, 2, 2	3	1	72	100 PZ
MSP430F6720IPZ	16	1	2	6 ext, 2 int	3, 2, 2, 2	3	1	72	100 PZ
MSP430F6736IPN	128	8	3	3 ext, 2 int	3, 2, 2, 2	3	1	52	80 PN
MSP430F6735IPN	128	4	3	3 ext, 2 int	3, 2, 2, 2	3	1	52	80 PN
MSP430F6734IPN	96	4	3	3 ext, 2 int	3, 2, 2, 2	3	1	52	80 PN
MSP430F6733IPN	64	4	3	3 ext, 2 int	3, 2, 2, 2	3	1	52	80 PN
MSP430F6731IPN	32	2	3	3 ext, 2 int	3, 2, 2, 2	3	1	52	80 PN
MSP430F6730IPN	16	1	3	3 ext, 2 int	3, 2, 2, 2	3	1	52	80 PN
MSP430F6726IPN	128	8	2	3 ext, 2 int	3, 2, 2, 2	3	1	52	80 PN
MSP430F6725IPN	128	4	2	3 ext, 2 int	3, 2, 2, 2	3	1	52	80 PN
MSP430F6724IPN	96	4	2	3 ext, 2 int	3, 2, 2, 2	3	1	52	80 PN
MSP430F6723IPN	64	4	2	3 ext, 2 int	3, 2, 2, 2	3	1	52	80 PN
MSP430F6721IPN	32	2	2	3 ext, 2 int	3, 2, 2, 2	3	1	52	80 PN
MSP430F6720IPN	16	1	2	3 ext, 2 int	3, 2, 2, 2	3	1	52	80 PN

(1) For the most current package and ordering information, see the *Package Option Addendum* in Section 8, or see the TI website at www.ti.com.
(2) Package drawings, thermal data, and symbolization are available at www.ti.com/packaging.
(3) Each number in the sequence represents an instantiation of Timer_A with its associated number of capture compare registers and PWM output generators available. For example, a number sequence of 3, 5 would represent two instantiations of Timer_A, the first instantiation having 3 and the second instantiation having 5 capture compare registers and PWM output generators, respectively.

Copyright © 2011–2018, Texas Instruments Incorporated

3.1 Related Products

For information about other devices in this family of products or related products, see the following links.

Products for TI Microcontrollers TI's low-power and high-performance MCUs, with wired and wireless connectivity options, are optimized for a broad range of applications.

Products for MSP430 Ultra-Low-Power Microcontrollers One platform. One ecosystem. Endless possibilities. Enabling the connected world with innovations in ultra-low-power microcontrollers with advanced peripherals for precise sensing and measurement.

Companion Products for MSP430F6736 Review products that are frequently purchased or used with this product.

Reference Designs for MSP430F6736 The TI Designs Reference Design Library is a robust reference design library that spans analog, embedded processor, and connectivity. Created by TI experts to help you jump start your system design, all TI Designs include schematic or block diagrams, BOMs, and design files to speed your time to market. Search and download designs at ti.com/tidesigns.

4 Terminal Configuration and Functions

4.1 Pin Diagrams

Figure 4-1 shows the pinout for the 100-pin PZ package. See Table 4-1 for differences between the MSP430F673x and MSP430F672x devices in this package.

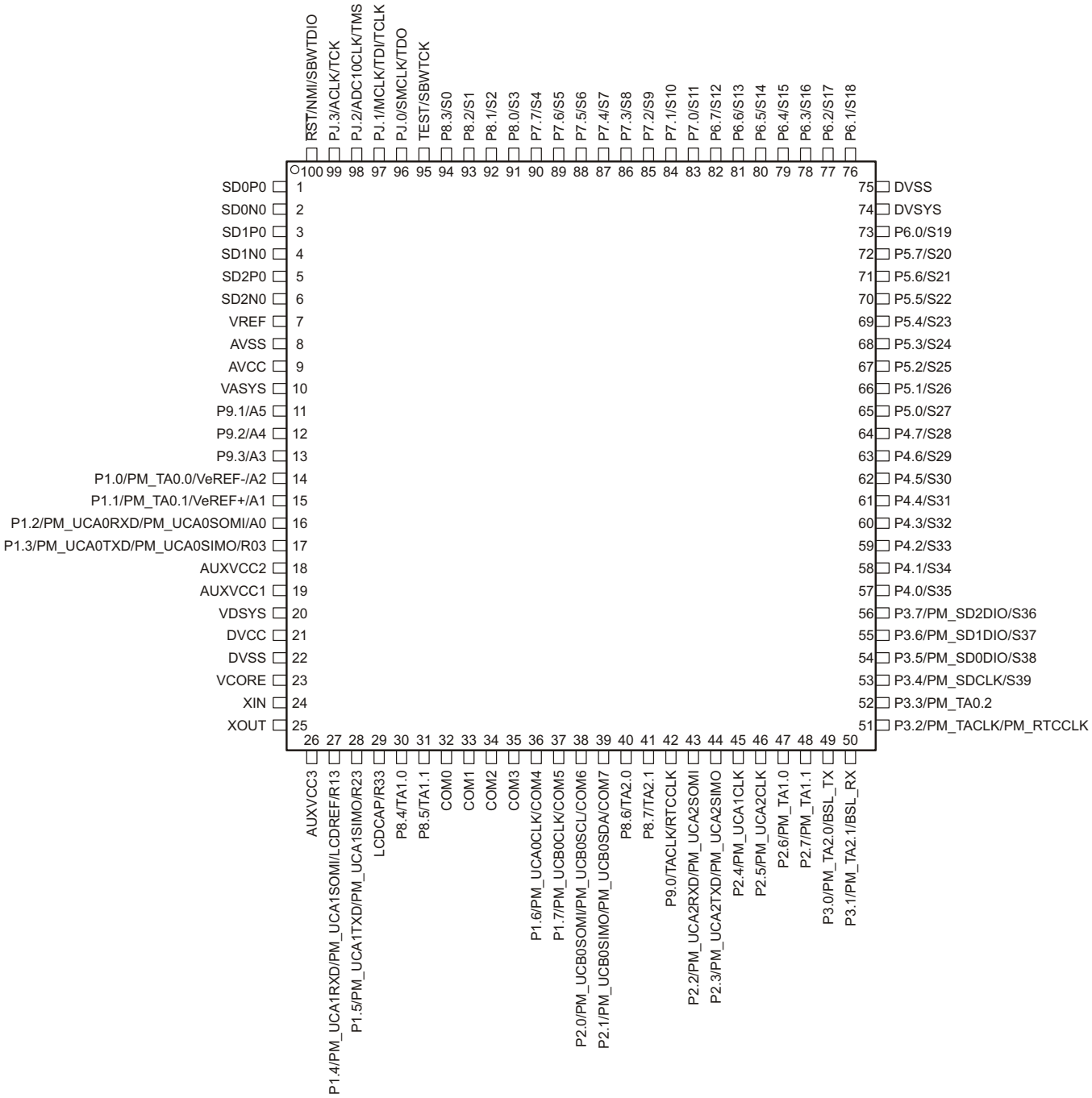

NOTE: The secondary digital functions on Ports P1, P2, and P3 are fully mappable. This pinout shows the default mapping. See Table 6-9 for details.

NOTE: The pins VDSYS and DVSYS must be connected externally on board for proper device operation.

CAUTION: The LCDCAP/R33 pin must be connected to DVSS if not used.

Figure 4-1. 100-Pin PZ Package (Top View)

Copyright © 2011–2018, Texas Instruments Incorporated

Table 4-1. Pinout Differences Between MSP430F673xIPZ and MSP430F672xIPZ(1)

PIN NUMBER	PIN NAME	
	MSP430F673xIPZ	MSP430F672xIPZ
1	SD0P0	SD0P0
2	SD0N0	SD0N0
3	SD1P0	SD1P0
4	SD1N0	SD1N0
5	*SD2P0*	*NC*
6	*SD2N0*	*NC*
7	VREF	VREF
53	P3.4/PM_SDCLK/S39	P3.4/PM_SDCLK/S39
54	P3.5/PM_SD0DIO/S38	P3.5/PM_SD0DIO/S38
55	P3.6/PM_SD1DIO/S37	P3.6/PM_SD1DIO/S37
56	P3.7/*PM_SD2DIO*/S36	P3.7/*PM_NONE*/S36

(1) Signal names that differ between devices are indicated by *italic* typeface.

Figure 4-2 shows the pinout for the 80-pin PN package. See Table 4-2 for differences between the MSP430F673x and MSP430F672x devices in this package.

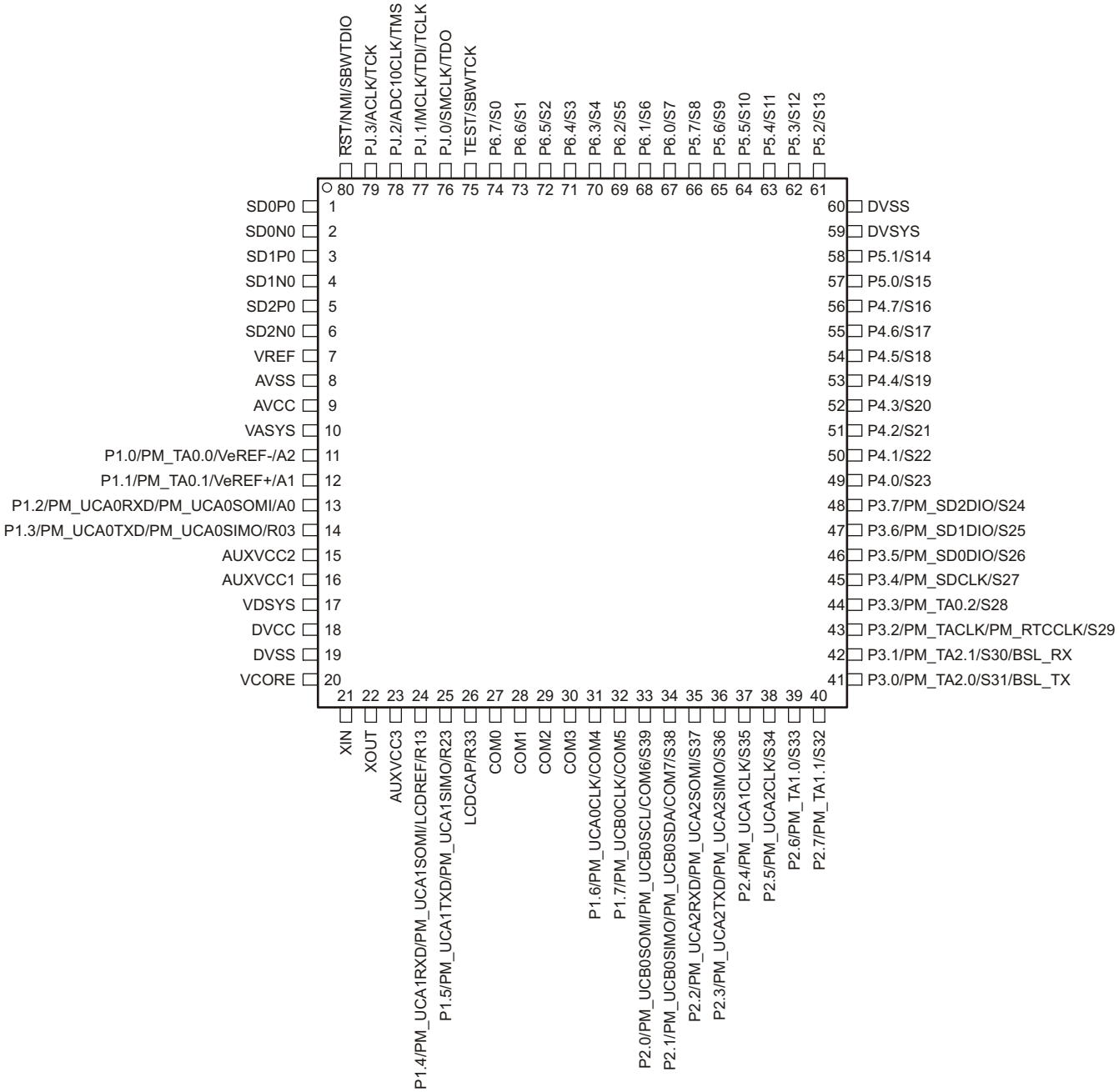

NOTE: The secondary digital functions on Ports P1, P2, and P3 are fully mappable. This pinout shows the default mapping. See Table 6-9 for details.

NOTE: The pins VDSYS and DVSYS must be connected externally on board for proper device operation.

CAUTION: The LCDCAP/R33 pin must be connected to DVSS if not used.

Figure 4-2. 80-Pin PN Package (Top View)

Copyright © 2011–2018, Texas Instruments Incorporated

Table 4-2. Pinout Differences Between MSP430F673xIPN and MSP430F672xIPN(1)

PIN NUMBER	PIN NAME	
	MSP430F673xIPN	MSP430F672xIPN
1	SD0P0	SD0P0
2	SD0N0	SD0N0
3	SD1P0	SD1P0
4	SD1N0	SD1N0
5	*SD2P0*	*NC*
6	*SD2N0*	*NC*
7	VREF	VREF
45	P3.4/PM_SDCLK/S27	P3.4/PM_SDCLK/S27
46	P3.5/PM_SD0DIO/S26	P3.5/PM_SD0DIO/S26
47	P3.6/PM_SD1DIO/S25	P3.6/PM_SD1DIO/S25
48	P3.7/*PM_SD2DIO*/S24	P3.7/*PM_NONE*/S24

(1) Signal names that differ between devices are indicated by *italic* typeface.

4.2 Signal Descriptions

Table 4-3 describes the signals for all device variants in the PZ package. See Table 4-4 for signal descriptions in the PN package.

Table 4-3. Terminal Functions, PZ Package

TERMINAL		I/O(1)	DESCRIPTION
NAME	NO. PZ		
SD0P0	1	I	SD24_B positive analog input for converter 0(2)
SD0N0	2	I	SD24_B negative analog input for converter 0(2)
SD1P0	3	I	SD24_B positive analog input for converter 1(2)
SD1N0	4	I	SD24_B negative analog input for converter 1(2)
SD2P0	5	I	SD24_B positive analog input for converter 2(2) (not available on F672x devices)
SD2N0	6	I	SD24_B negative analog input for converter 2(2) (not available on F672x devices)
VREF	7	I	SD24_B external reference voltage
AVSS	8		Analog ground supply
AVCC	9		Analog power supply
VASYS	10		Analog power supply selected between AVCC, AUXVCC1, AUXVCC2. Connect recommended capacitor value of C_{VSYS} (see Table 5-18).
P9.1/A5	11	I/O	General-purpose digital I/O Analog input A5 for 10-bit ADC
P9.2/A4	12	I/O	General-purpose digital I/O Analog input A4 for 10-bit ADC
P9.3/A3	13	I/O	General-purpose digital I/O Analog input A3 for 10-bit ADC
P1.0/PM_TA0.0/VeREF-/A2	14	I/O	General-purpose digital I/O with port interrupt and mappable secondary function Default mapping: Timer TA0 CCR0 capture: CCI0A input, compare: Out0 output Negative terminal for the ADC reference voltage for an external applied reference voltage Analog input A2 for 10-bit ADC
P1.1/PM_TA0.1/VeREF+/A1	15	I/O	General-purpose digital I/O with port interrupt and mappable secondary function Default mapping: Timer TA0 CCR1 capture: CCI1A input, compare: Out1 output Positive terminal for the ADC reference voltage for an external applied reference voltage Analog input A1 for 10-bit ADC
P1.2/PM_UCA0RXD/ PM_UCA0SOMI/A0	16	I/O	General-purpose digital I/O with port interrupt and mappable secondary function Default mapping: eUSCI_A0 UART receive data; eUSCI_A0 SPI slave out/master in Analog input A0 for 10-bit ADC
P1.3/PM_UCA0TXD/ PM_UCA0SIMO/R03	17	I/O	General-purpose digital I/O with port interrupt and mappable secondary function Default mapping: eUSCI_A0 UART transmit data; eUSCI_A0 SPI slave in/master out Input/output port of lowest analog LCD voltage (V5)
AUXVCC2	18		Auxiliary power supply AUXVCC2
AUXVCC1	19		Auxiliary power supply AUXVCC1

(1) I = input, O = output
(2) Short unused analog input pairs and connect them to analog ground.

Copyright © 2011–2018, Texas Instruments Incorporated

Table 4-3. Terminal Functions, PZ Package (continued)

TERMINAL		I/O[1]	DESCRIPTION
NAME	NO. PZ		
VDSYS[3]	20		Digital power supply selected between DVCC, AUXVCC1, AUXVCC2. Connect recommended capacitor value of C_{VSYS} (see Table 5-18).
DVCC	21		Digital power supply
DVSS	22		Digital ground supply
VCORE[4]	23		Regulated core power supply (internal use only, no external current loading)
XIN	24	I	Input terminal for crystal oscillator
XOUT	25	O	Output terminal for crystal oscillator
AUXVCC3	26		Auxiliary power supply AUXVCC3 for back up subsystem
P1.4/PM_UCA1RXD/ PM_UCA1SOMI/LCDREF/R13	27	I/O	General-purpose digital I/O with port interrupt and mappable secondary function Default mapping: eUSCI_A1 UART receive data; eUSCI_A1 SPI slave out/master in External reference voltage input for regulated LCD voltage Input/output port of third most positive analog LCD voltage (V3 or V4)
P1.5/PM_UCA1TXD/ PM_UCA1SIMO/R23	28	I/O	General-purpose digital I/O with port interrupt and mappable secondary function Default mapping: eUSCI_A1 UART transmit data; eUSCI_A1 SPI slave in/master out Input/output port of second most positive analog LCD voltage (V2)
LCDCAP/R33	29	I/O	LCD capacitor connection Input/output port of most positive analog LCD voltage (V1) **CAUTION**: This pin must be connected to DVSS if not used.
P8.4/TA1.0	30	I/O	General-purpose digital I/O Timer TA1 CCR0 capture: CCI0A input, compare: Out0 output
P8.5/TA1.1	31	I/O	General-purpose digital I/O Timer TA1 CCR1 capture: CCI1A input, compare: Out1 output
COM0	32	O	LCD common output COM0 for LCD backplane
COM1	33	O	LCD common output COM1 for LCD backplane
COM2	34	O	LCD common output COM2 for LCD backplane
COM3	35	O	LCD common output COM3 for LCD backplane
P1.6/PM_UCA0CLK/COM4	36	I/O	General-purpose digital I/O with port interrupt and mappable secondary function Default mapping: eUSCI_A0 clock input/output LCD common output COM4 for LCD backplane
P1.7/PM_UCB0CLK/COM5	37	I/O	General-purpose digital I/O with port interrupt and mappable secondary function Default mapping: eUSCI_B0 clock input/output LCD common output COM5 for LCD backplane
P2.0/PM_UCB0SOMI/ PM_UCB0SCL/COM6	38	I/O	General-purpose digital I/O with port interrupt and mappable secondary function Default mapping: eUSCI_B0 SPI slave out/master in; eUSCI_B0 I^2C clock LCD common output COM6 for LCD backplane

(3) The pins VDSYS and DVSYS must be connected externally on the board for proper device operation.
(4) VCORE is for internal use only. No external current loading is possible. VCORE should only be connected to the recommended capacitor value, C_{VCORE}.

Table 4-3. Terminal Functions, PZ Package (continued)

TERMINAL		I/O(1)	DESCRIPTION
NAME	NO. PZ		
P2.1/PM_UCB0SIMO/ PM_UCB0SDA/COM7	39	I/O	General-purpose digital I/O with port interrupt and mappable secondary function Default mapping: eUSCI_B0 SPI slave in/master out; eUSCI_B0 I^2C data LCD common output COM7 for LCD backplane
P8.6/TA2.0	40	I/O	General-purpose digital I/O Timer TA2 CCR0 capture: CCI0A input, compare: Out0 output
P8.7/TA2.1	41	I/O	General-purpose digital I/O Timer TA2 CCR1 capture: CCI1A input, compare: Out1 output
P9.0/TACLK/RTCCLK	42	I/O	General-purpose digital I/O Timer clock input TACLK for TA0, TA1, TA2, TA3 RTCCLK clock output
P2.2/PM_UCA2RXD/ PM_UCA2SOMI	43	I/O	General-purpose digital I/O with port interrupt and mappable secondary function Default mapping: eUSCI_A2 UART receive data; eUSCI_A2 SPI slave out/master in
P2.3/PM_UCA2TXD/ PM_UCA2SIMO	44	I/O	General-purpose digital I/O with port interrupt and mappable secondary function Default mapping: eUSCI_A2 UART transmit data; eUSCI_A2 SPI slave in/master out
P2.4/PM_UCA1CLK	45	I/O	General-purpose digital I/O with port interrupt and mappable secondary function Default mapping: eUSCI_A1 clock input/output
P2.5/PM_UCA2CLK	46	I/O	General-purpose digital I/O with port interrupt and mappable secondary function Default mapping: eUSCI_A2 clock input/output
P2.6/PM_TA1.0	47	I/O	General-purpose digital I/O with port interrupt and mappable secondary function Default mapping: Timer TA1 capture CCR0: CCI0A input, compare: Out0 output
P2.7/PM_TA1.1	48	I/O	General-purpose digital I/O with port interrupt and mappable secondary function Default mapping: Timer TA1 capture CCR1: CCI1A input, compare: Out1 output
P3.0/PM_TA2.0/BSL_TX	49	I/O	General-purpose digital I/O with mappable secondary function Default mapping: Timer TA2 capture CCR0: CCI0A input, compare: Out0 output Bootloader: Data transmit
P3.1/PM_TA2.1/BSL_RX	50	I/O	General-purpose digital I/O with mappable secondary function Default mapping: Timer TA2 capture CCR1: CCI1A input, compare: Out1 output Bootloader: Data receive
P3.2/PM_TACLK/PM_RTCCLK	51	I/O	General-purpose digital I/O with mappable secondary function Default mapping: Timer clock input TACLK for TA0, TA1, TA2, TA3; RTCCLK clock output
P3.3/PM_TA0.2	52	I/O	General-purpose digital I/O with mappable secondary function Default mapping: Timer TA0 capture CCR2: CCI2A input, compare: Out2 output
P3.4/PM_SDCLK/S39	53	I/O	General-purpose digital I/O with mappable secondary function Default mapping: SD24_B bitstream clock input/output LCD segment output S39

Copyright © 2011–2018, Texas Instruments Incorporated

Table 4-3. Terminal Functions, PZ Package (continued)

TERMINAL		I/O[1]	DESCRIPTION
NAME	NO. PZ		
P3.5/PM_SD0DIO/S38	54	I/O	General-purpose digital I/O with mappable secondary function Default mapping: SD24_B converter-0 bitstream data input/output LCD segment output S38
P3.6/PM_SD1DIO/S37	55	I/O	General-purpose digital I/O with mappable secondary function Default mapping: SD24_B converter-1 bitstream data input/output LCD segment output S37
P3.7/PM_SD2DIO/S36	56	I/O	General-purpose digital I/O with mappable secondary function Default mapping: SD24_B converter-2 bitstream data input/output (not available on F672x devices) LCD segment output S36
P4.0/S35	57	I/O	General-purpose digital I/O LCD segment output S35
P4.1/S34	58	I/O	General-purpose digital I/O LCD segment output S34
P4.2/S33	59	I/O	General-purpose digital I/O LCD segment output S33
P4.3/S32	60	I/O	General-purpose digital I/O LCD segment output S32
P4.4/S31	61	I/O	General-purpose digital I/O LCD segment output S31
P4.5/S30	62	I/O	General-purpose digital I/O LCD segment output S30
P4.6/S29	63	I/O	General-purpose digital I/O LCD segment output S29
P4.7/S28	64	I/O	General-purpose digital I/O LCD segment output S28
P5.0/S27	65	I/O	General-purpose digital I/O LCD segment output S27
P5.1/S26	66	I/O	General-purpose digital I/O LCD segment output S26
P5.2/S25	67	I/O	General-purpose digital I/O LCD segment output S25
P5.3/S24	68	I/O	General-purpose digital I/O LCD segment output S24
P5.4/S23	69	I/O	General-purpose digital I/O LCD segment output S23

Table 4-3. Terminal Functions, PZ Package (continued)

TERMINAL		I/O[1]	DESCRIPTION
NAME	NO. PZ		
P5.5/S22	70	I/O	General-purpose digital I/O LCD segment output S22
P5.6/S21	71	I/O	General-purpose digital I/O LCD segment output S21
P5.7/S20	72	I/O	General-purpose digital I/O LCD segment output S20
P6.0/S19	73	I/O	General-purpose digital I/O LCD segment output S19
DVSYS[3]	74		Digital power supply for I/Os
DVSS	75		Digital ground supply
P6.1/S18	76	I/O	General-purpose digital I/O LCD segment output S18
P6.2/S17	77	I/O	General-purpose digital I/O LCD segment output S17
P6.3/S16	78	I/O	General-purpose digital I/O LCD segment output S16
P6.4/S15	79	I/O	General-purpose digital I/O LCD segment output S15
P6.5/S14	80	I/O	General-purpose digital I/O LCD segment output S14
P6.6/S13	81	I/O	General-purpose digital I/O LCD segment output S13
P6.7/S12	82	I/O	General-purpose digital I/O LCD segment output S12
P7.0/S11	83	I/O	General-purpose digital I/O LCD segment output S11
P7.1/S10	84	I/O	General-purpose digital I/O LCD segment output S10
P7.2/S9	85	I/O	General-purpose digital I/O LCD segment output S9
P7.3/S8	86	I/O	General-purpose digital I/O LCD segment output S8
P7.4/S7	87	I/O	General-purpose digital I/O LCD segment output S7

Copyright © 2011–2018, Texas Instruments Incorporated

Table 4-3. Terminal Functions, PZ Package (continued)

TERMINAL		I/O[1]	DESCRIPTION
NAME	NO. PZ		
P7.5/S6	88	I/O	General-purpose digital I/O LCD segment output S6
P7.6/S5	89	I/O	General-purpose digital I/O LCD segment output S5
P7.7/S4	90	I/O	General-purpose digital I/O LCD segment output S4
P8.0/S3	91	I/O	General-purpose digital I/O LCD segment output S3
P8.1/S2	92	I/O	General-purpose digital I/O LCD segment output S2
P8.2/S1	93	I/O	General-purpose digital I/O LCD segment output S1
P8.3/S0	94	I/O	General-purpose digital I/O LCD segment output S0
TEST/SBWTCK	95	I	Test mode pin – select digital I/O on JTAG pins Spy-Bi-Wire input clock
PJ.0/SMCLK/TDO	96	I/O	General-purpose digital I/O SMCLK clock output Test data output
PJ.1/MCLK/TDI/TCLK	97	I/O	General-purpose digital I/O MCLK clock output Test data input or Test clock input
PJ.2/ADC10CLK/TMS	98	I/O	General-purpose digital I/O ADC10_A clock output Test mode select
PJ.3/ACLK/TCK	99	I/O	General-purpose digital I/O ACLK clock output Test clock
$\overline{\text{RST}}$/NMI/SBWTDIO	100	I/O	Reset input active low[5] Nonmaskable interrupt input Spy-Bi-Wire data input/output

(5) When this pin is configured as reset, the internal pullup resistor is enabled by default.

Table 4-4 describes the signals for all device variants in the PN package. See Table 4-3 for signal descriptions in the PZ package.

Table 4-4. Terminal Functions, PN Package

TERMINAL		I/O(1)	DESCRIPTION
NAME	NO. PN		
SD0P0	1	I	SD24_B positive analog input for converter 0(2)
SD0N0	2	I	SD24_B negative analog input for converter 0(2)
SD1P0	3	I	SD24_B positive analog input for converter 1(2)
SD1N0	4	I	SD24_B negative analog input for converter 1(2)
SD2P0	5	I	SD24_B positive analog input for converter 2(2) (not available on F672x devices)
SD2N0	6	I	SD24_B negative analog input for converter 2(2) (not available on F672x devices)
VREF	7	I	SD24_B external reference voltage
AVSS	8		Analog ground supply
AVCC	9		Analog power supply
VASYS	10		Analog power supply selected between AVCC, AUXVCC1, AUXVCC2. Connect recommended capacitor value of C_{VSYS} (see Table 5-18).
P1.0/PM_TA0.0/VeREF-/A2	11	I/O	General-purpose digital I/O with port interrupt and mappable secondary function Default mapping: Timer TA0 CCR0 capture: CCI0A input, compare: Out0 output Negative terminal for the ADC reference voltage for an external applied reference voltage Analog input A2 for 10-bit ADC
P1.1/PM_TA0.1/VeREF+/A1	12	I/O	General-purpose digital I/O with port interrupt and mappable secondary function Default mapping: Timer TA0 CCR1 capture: CCI1A input, compare: Out1 output Positive terminal for the ADC reference voltage for an external applied reference voltage Analog input A1 for 10-bit ADC
P1.2/PM_UCA0RXD/ PM_UCA0SOMI/A0	13	I/O	General-purpose digital I/O with port interrupt and mappable secondary function Default mapping: eUSCI_A0 UART receive data; eUSCI_A0 SPI slave out/master in Analog input A0 for 10-bit ADC
P1.3/PM_UCA0TXD/ PM_UCA0SIMO/R03	14	I/O	General-purpose digital I/O with port interrupt and mappable secondary function Default mapping: eUSCI_A0 UART transmit data; eUSCI_A0 SPI slave in/master out Input/output port of lowest analog LCD voltage (V5)
AUXVCC2	15		Auxiliary power supply AUXVCC2
AUXVCC1	16		Auxiliary power supply AUXVCC1
VDSYS(3)	17		Digital power supply selected between DVCC, AUXVCC1, AUXVCC2. Connect recommended capacitor value of C_{VSYS} (see Table 5-18).
DVCC	18		Digital power supply
DVSS	19		Digital ground supply
VCORE(4)	20		Regulated core power supply (internal use only, no external current loading)
XIN	21	I	Input terminal for crystal oscillator
XOUT	22	O	Output terminal for crystal oscillator
AUXVCC3	23		Auxiliary power supply AUXVCC3 for back up subsystem

(1) I = input, O = output
(2) Short unused analog input pairs and connect them to analog ground.
(3) The pins VDSYS and DVSYS must be connected externally on the board for proper device operation.
(4) VCORE is for internal use only. No external current loading is possible. VCORE should only be connected to the recommended capacitor value, C_{VCORE}.

Copyright © 2011–2018, Texas Instruments Incorporated

Table 4-4. Terminal Functions, PN Package (continued)

TERMINAL		I/O[1]	DESCRIPTION
NAME	NO. PN		
P1.4/PM_UCA1RXD/ PM_UCA1SOMI/LCDREF/R13	24	I/O	General-purpose digital I/O with port interrupt and mappable secondary function Default mapping: eUSCI_A1 UART receive data; eUSCI_A1 SPI slave out/master in External reference voltage input for regulated LCD voltage Input/output port of third most positive analog LCD voltage (V3 or V4)
P1.5/PM_UCA1TXD/ PM_UCA1SIMO/R23	25	I/O	General-purpose digital I/O with port interrupt and mappable secondary function Default mapping: eUSCI_A1 UART transmit data; eUSCI_A1 SPI slave in/master out Input/output port of second most positive analog LCD voltage (V2)
LCDCAP/R33	26	I/O	LCD capacitor connection Input/output port of most positive analog LCD voltage (V1) **CAUTION**: This pin must be connected to DVSS if not used.
COM0	27	O	LCD common output COM0 for LCD backplane
COM1	28	O	LCD common output COM1 for LCD backplane
COM2	29	O	LCD common output COM2 for LCD backplane
COM3	30	O	LCD common output COM3 for LCD backplane
P1.6/PM_UCA0CLK/COM4	31	I/O	General-purpose digital I/O with port interrupt and mappable secondary function Default mapping: eUSCI_A0 clock input/output LCD common output COM4 for LCD backplane
P1.7/PM_UCB0CLK/COM5	32	I/O	General-purpose digital I/O with port interrupt and mappable secondary function Default mapping: eUSCI_B0 clock input/output LCD common output COM5 for LCD backplane
P2.0/PM_UCB0SOMI/ PM_UCB0SCL/COM6/S39	33	I/O	General-purpose digital I/O with port interrupt and mappable secondary function Default mapping: eUSCI_B0 SPI slave out/master in; eUSCI_B0 I^2C clock LCD common output COM6 for LCD backplane LCD segment output S39
P2.1/PM_UCB0SIMO/ PM_UCB0SDA/COM7/S38	34	I/O	General-purpose digital I/O with port interrupt and mappable secondary function Default mapping: eUSCI_B0 SPI slave in/master out; eUSCI_B0 I^2C data LCD common output COM7 for LCD backplane LCD segment output S38
P2.2/PM_UCA2RXD/ PM_UCA2SOMI/S37	35	I/O	General-purpose digital I/O with port interrupt and mappable secondary function Default mapping: eUSCI_A2 UART receive data; eUSCI_A2 SPI slave out/master in LCD segment output S37
P2.3/PM_UCA2TXD/ PM_UCA2SIMO/S36	36	I/O	General-purpose digital I/O with port interrupt and mappable secondary function Default mapping: eUSCI_A2 UART transmit data; eUSCI_A2 SPI slave in/master out LCD segment output S36
P2.4/PM_UCA1CLK/S35	37	I/O	General-purpose digital I/O with port interrupt and mappable secondary function Default mapping: eUSCI_A1 clock input/output LCD segment output S35

Table 4-4. Terminal Functions, PN Package (continued)

TERMINAL		I/O[1]	DESCRIPTION
NAME	NO. PN		
P2.5/PM_UCA2CLK/S34	38	I/O	General-purpose digital I/O with port interrupt and mappable secondary function Default mapping: eUSCI_A2 clock input/output LCD segment output S34
P2.6/PM_TA1.0/S33	39	I/O	General-purpose digital I/O with port interrupt and mappable secondary function Default mapping: Timer TA1 capture CCR0: CCI0A input, compare: Out0 output LCD segment output S33
P2.7/PM_TA1.1/S32	40	I/O	General-purpose digital I/O with port interrupt and mappable secondary function Default mapping: Timer TA1 capture CCR1: CCI1A input, compare: Out1 output LCD segment output S32
P3.0/PM_TA2.0/S31/BSL_TX	41	I/O	General-purpose digital I/O with mappable secondary function Default mapping: Timer TA2 capture CCR0: CCI0A input, compare: Out0 output LCD segment output S31 Bootloader: Data transmit
P3.1/PM_TA2.1/S30/BSL_RX	42	I/O	General-purpose digital I/O with mappable secondary function Default mapping: Timer TA2 capture CCR1: CCI1A input, compare: Out1 output LCD segment output S30 Bootloader: Data receive
P3.2/PM_TACLK/PM_RTCCLK/ S29	43	I/O	General-purpose digital I/O with mappable secondary function Default mapping: Timer clock input TACLK for TA0, TA1, TA2, TA3; RTCCLK clock output LCD segment output S29
P3.3/PM_TA0.2/S28	44	I/O	General-purpose digital I/O with mappable secondary function Default mapping: Timer TA0 capture CCR2: CCI2A input, compare: Out2 output LCD segment output S28
P3.4/PM_SDCLK/S27	45	I/O	General-purpose digital I/O with mappable secondary function Default mapping: SD24_B bitstream clock input/output LCD segment output S27
P3.5/PM_SD0DIO/S26	46	I/O	General-purpose digital I/O with mappable secondary function Default mapping: SD24_B converter-0 bitstream data input/output LCD segment output S26
P3.6/PM_SD1DIO/S25	47	I/O	General-purpose digital I/O with mappable secondary function Default mapping: SD24_B converter-1 bitstream data input/output LCD segment output S25
P3.7/PM_SD2DIO/S24	48	I/O	General-purpose digital I/O with mappable secondary function Default mapping: SD24_B converter-2 bitstream data input/output (not available on F672x devices) LCD segment output S24

Copyright © 2011–2018, Texas Instruments Incorporated

Table 4-4. Terminal Functions, PN Package (continued)

TERMINAL		I/O[1]	DESCRIPTION
NAME	NO. PN		
P4.0/S23	49	I/O	General-purpose digital I/O LCD segment output S23
P4.1/S22	50	I/O	General-purpose digital I/O LCD segment output S22
P4.2/S21	51	I/O	General-purpose digital I/O LCD segment output S21
P4.3/S20	52	I/O	General-purpose digital I/O LCD segment output S20
P4.4/S19	53	I/O	General-purpose digital I/O LCD segment output S19
P4.5/S18	54	I/O	General-purpose digital I/O LCD segment output S18
P4.6/S17	55	I/O	General-purpose digital I/O LCD segment output S17
P4.7/S16	56	I/O	General-purpose digital I/O LCD segment output S16
P5.0/S15	57	I/O	General-purpose digital I/O LCD segment output S15
P5.1/S14	58	I/O	General-purpose digital I/O LCD segment output S14
DVSYS[3]	59		Digital power supply for I/Os
DVSS	60		Digital ground supply
P5.2/S13	61	I/O	General-purpose digital I/O LCD segment output S13
P5.3/S12	62	I/O	General-purpose digital I/O LCD segment output S12
P5.4/S11	63	I/O	General-purpose digital I/O LCD segment output S11
P5.5/S10	64	I/O	General-purpose digital I/O LCD segment output S10
P5.6/S9	65	I/O	General-purpose digital I/O LCD segment output S9
P5.7/S8	66	I/O	General-purpose digital I/O LCD segment output S8

Table 4-4. Terminal Functions, PN Package (continued)

TERMINAL		I/O[1]	DESCRIPTION
NAME	NO. PN		
P6.0/S7	67	I/O	General-purpose digital I/O LCD segment output S7
P6.1/S6	68	I/O	General-purpose digital I/O LCD segment output S6
P6.2/S5	69	I/O	General-purpose digital I/O LCD segment output S5
P6.3/S4	70	I/O	General-purpose digital I/O LCD segment output S4
P6.4/S3	71	I/O	General-purpose digital I/O LCD segment output S3
P6.5/S2	72	I/O	General-purpose digital I/O LCD segment output S2
P6.6/S1	73	I/O	General-purpose digital I/O LCD segment output S1
P6.7/S0	74	I/O	General-purpose digital I/O LCD segment output S0
TEST/SBWTCK	75	I	Test mode pin – select digital I/O on JTAG pins Spy-Bi-Wire input clock
PJ.0/SMCLK/TDO	76	I/O	General-purpose digital I/O SMCLK clock output Test data output
PJ.1/MCLK/TDI/TCLK	77	I/O	General-purpose digital I/O MCLK clock output Test data input or Test clock input
PJ.2/ADC10CLK/TMS	78	I/O	General-purpose digital I/O ADC10_A clock output Test mode select
PJ.3/ACLK/TCK	79	I/O	General-purpose digital I/O ACLK clock output Test clock
$\overline{\text{RST}}$/NMI/SBWTDIO	80	I/O	Reset input active low[5] Nonmaskable interrupt input Spy-Bi-Wire data input/output

(5) When this pin is configured as reset, the internal pullup resistor is enabled by default.

Copyright © 2011–2018, Texas Instruments Incorporated

5 Specifications

All graphs in this section are for typical conditions, unless otherwise noted.

Typical (TYP) values are specified at V_{CC} = 3.3 V and T_A = 25°C, unless otherwise noted.

5.1 Absolute Maximum Ratings

over operating free-air temperature range (unless otherwise noted)[1]

		MIN	MAX	UNIT
Voltage applied at DVCC to DVSS		–0.3	4.1	V
Voltage applied to pins[2]	All pins except VCORE[3], SD24_B input pins (SD0N0, SD0P0, SD1N0, SD1P0, SD2N0, SD2P0)[4], AUXVCC1, AUXVCC2, and AUXVCC3[5]	–0.3	V_{CC} + 0.3	V
Diode current at pins	All pins except SD24_B input pins (SD0N0, SD0P0, SD1N0, SD1P0, SD2N0, SD2P0)		±2	mA
	SD0N0, SD0P0, SD1N0, SD1P0, SD2N0, SD2P0[6]		2	
Maximum junction temperature, T_J			95	°C
Storage temperature, T_{stg}[7]		–55	150	°C

(1) Stresses beyond those listed under *Absolute Maximum Ratings* may cause permanent damage to the device. These are stress ratings only, and functional operation of the device at these or any other conditions beyond those indicated under *Recommended Operating Conditions* is not implied. Exposure to absolute-maximum-rated conditions for extended periods may affect device reliability.
(2) All voltages referenced to V_{SS} = $V_{(DVSS)}$ = $V_{(AVSS)}$.
(3) VCORE is for internal device use only. Do not apply external DC loading or voltage.
(4) See Table 5-35 for SD24_B specifications.
(5) See Table 5-18 for AUX specifications.
(6) A protection diode is connected to V_{CC} for the SD24_B input pins. No protection diode is connected to V_{SS}.
(7) Higher temperature may be applied during board soldering according to the current JEDEC J-STD-020 specification with peak reflow temperatures not higher than classified on the device label on the shipping boxes or reels.

5.2 ESD Ratings

			VALUE	UNIT
$V_{(ESD)}$	Electrostatic discharge	Human-body model (HBM), per ANSI/ESDA/JEDEC JS-001[1]	±1000	V
		Charged-device model (CDM), per JEDEC specification JESD22-C101[2]	±250	

(1) JEDEC document JEP155 states that 500-V HBM allows safe manufacturing with a standard ESD control process. Pins listed as ±1000 V may actually have higher performance.
(2) JEDEC document JEP157 states that 250-V CDM allows safe manufacturing with a standard ESD control process. Pins listed as ±250 V may actually have higher performance.

5.3 Recommended Operating Conditions

			MIN	NOM	MAX	UNIT
V_{CC}	Supply voltage during program execution and flash programming, $V_{(AVCC)}$ = $V_{(DVCC)}$ = V_{CC} [1][2]	PMMCOREVx = 0	1.8		3.6	V
		PMMCOREVx = 0, 1	2.0		3.6	
		PMMCOREVx = 0, 1, 2	2.2		3.6	
		PMMCOREVx = 0, 1, 2, 3	2.4		3.6	
V_{SS}	Supply voltage $V_{(AVSS)}$ = $V_{(DVSS)}$ = V_{SS}			0		V
T_A	Operating free-air temperature		–40		85	°C
T_J	Operating junction temperature		–40		85	°C
C_{VCORE}	Recommended capacitor at VCORE[3]			470		nF
C_{DVCC}/C_{VCORE}	Capacitor ratio of DVCC to VCORE		10			

(1) TI recommends powering AVCC and DVCC from the same source. A maximum difference of 0.3 V between $V_{(AVCC)}$ and $V_{(DVCC)}$ can be tolerated during power up and operation.
(2) The minimum supply voltage is defined by the supervisor SVS levels when it is enabled. See the Table 5-13 threshold parameters for the exact values and further details.
(3) A capacitor tolerance of ±20% or better is required.

Copyright © 2011–2018, Texas Instruments Incorporated

Recommended Operating Conditions *(continued)*

			MIN	NOM	MAX	UNIT
f_{SYSTEM}	Processor frequency (maximum MCLK frequency)(4)(5) (see Figure 5-1)	PMMCOREVx = 0, 1.8 V ≤ V_{CC} ≤ 3.6 V (default condition)	0		8.0	MHz
		PMMCOREVx = 1, 2.0 V ≤ V_{CC} ≤ 3.6 V	0		12.0	
		PMMCOREVx = 2, 2.2 V ≤ V_{CC} ≤ 3.6 V	0		20.0	
		PMMCOREVx = 3, 2.4 V ≤ V_{CC} ≤ 3.6 V	0		25.0	
$I_{LOAD, DVCCD}$	Maximum load current that can be drawn from DVCC for core and IO ($I_{LOAD} = I_{CORE} + I_{IO}$)				20	mA
$I_{LOAD, AUX1D}$	Maximum load current that can be drawn from AUXVCC1 for core and IO ($I_{LOAD} = I_{CORE} + I_{IO}$)				20	mA
$I_{LOAD, AUX2D}$	Maximum load current that can be drawn from AUXVCC2 for core and IO ($I_{LOAD} = I_{CORE} + I_{IO}$)				20	mA
$I_{LOAD, AVCCA}$	Maximum load current that can be drawn from AVCC for analog modules ($I_{LOAD} = I_{Modules}$)				10	mA
$I_{LOAD, AUX1A}$	Maximum load current that can be drawn from AUXVCC1 for analog modules ($I_{LOAD} = I_{Modules}$)				5	mA
$I_{LOAD, AUX2A}$	Maximum load current that can be drawn from AUXVCC2 for analog modules ($I_{LOAD} = I_{Modules}$)				5	mA

(4) The MSP430 CPU is clocked directly with MCLK. Both the high and low phases of MCLK must not exceed the pulse duration of the specified maximum frequency.
(5) Modules may have a different maximum input clock specification. See the specification of the respective module in this data sheet.

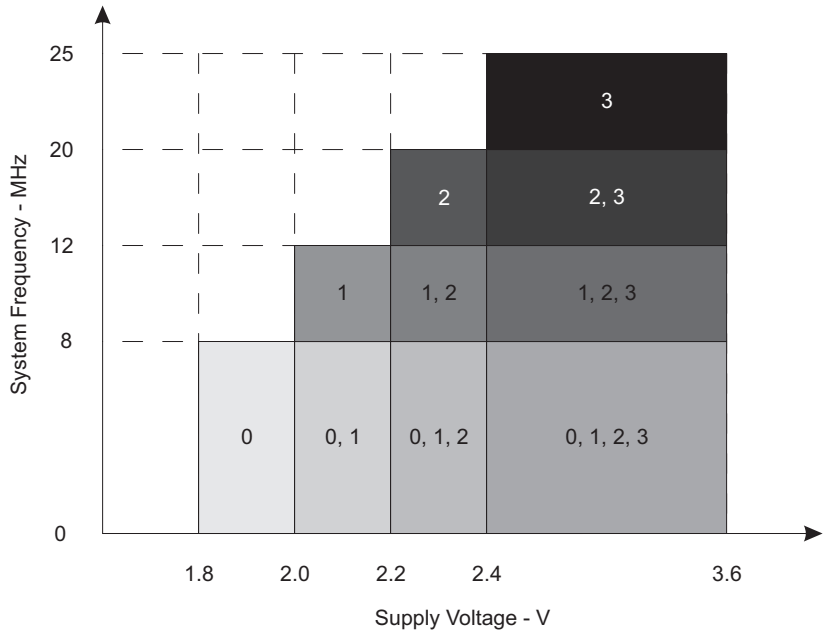

The numbers within the fields denote the supported PMMCOREVx settings.

Figure 5-1. Maximum System Frequency

5.4 Active Mode Supply Current Into V_{CC} Excluding External Current

over recommended operating free-air temperature (unless otherwise noted)(1) (2) (3)

PARAMETER	EXECUTION MEMORY	V_{CC}	PMMCOREVx	FREQUENCY ($f_{DCO} = f_{MCLK} = f_{SMCLK}$)										UNIT
				1 MHz		8 MHz		12 MHz		20 MHz		25 MHz		
				TYP	MAX	TYP	MAX	TYP	MAX	TYP	MAX	TYP	MAX	
$I_{AM, Flash}$ (4)	Flash	3.0 V	0	0.32	0.36	2.10	2.30							mA
			1	0.36		2.39		3.54	3.90					
			2	0.39		2.65		3.94		6.54	7.23			
			3	0.42		2.82		4.20		6.96		8.65	9.54	
$I_{AM, RAM}$ (5)	RAM	3.0 V	0	0.20	0.22	1.10	1.22							mA
			1	0.22		1.30		1.90	2.10					
			2	0.24		1.45		2.15		3.55	4.0			
			3	0.26		1.55		2.30		3.80		4.70	5.30	

(1) All inputs are tied to 0 or to V_{CC}. Outputs do not source or sink any current.
(2) The currents are characterized with a Micro Crystal MS1V-T1K crystal with a load capacitance of 12.5 pF. The internal and external load capacitance are chosen to closely match the required 12.5 pF.
(3) Characterized with program executing typical data processing.
f_{ACLK} = 32786 Hz, $f_{DCO} = f_{MCLK} = f_{SMCLK}$ at specified frequency.
XTS = CPUOFF = SCG0 = SCG1 = OSCOFF = SMCLKOFF = 0.
(4) Active mode supply current when program executes in flash at a nominal supply voltage of 3 V.
(5) Active mode supply current when program executes in RAM at a nominal supply voltage of 3 V.

Copyright © 2011–2018, Texas Instruments Incorporated

5.5 Low-Power Mode Supply Currents (Into V_{CC}) Excluding External Current

over recommended ranges of supply voltage and operating free-air temperature (unless otherwise noted)[1][2]

PARAMETER		V_{CC}	PMMCOREVx	TEMPERATURE (T_A)								UNIT
				–40°C		25°C		60°C		85°C		
				TYP	MAX	TYP	MAX	TYP	MAX	TYP	MAX	
$I_{LPM0,1MHz}$	Low-power mode 0[3][4]	2.2 V	0	75		78	87	81		84	96	µA
		3.0 V	3	85		89	99	93		98	110	
I_{LPM2}	Low-power mode 2[5][4]	2.2 V	0	5.9		6.2	9	6.9		9.4	17	µA
		3.0 V	3	6.9		7.4	10	8.4		11	19	
$I_{LPM3,XT1LF}$	Low-power mode 3, crystal mode[6][4]	2.2 V	0	1.4		1.7		2.5		4.9		µA
			1	1.5		1.9		2.7		5.2		
			2	1.7		2.0		2.9		5.5		
$I_{LPM3,XT1LF}$	Low-power mode 3, crystal mode[6][4]	3.0 V	0	2.2		2.5	3.1	3.3		5.5	12.7	µA
			1	2.3		2.7		3.5		5.8		
			2	2.5		2.9		3.7		6.1		
			3	2.5		2.9	3.5	3.7		6.1	14.0	
$I_{LPM3,VLO}$	Low-power mode 3, VLO mode[7][4]	3.0 V	0	1.4		1.7	2.2	2.4		4.5	11.5	µA
			1	1.5		1.8		2.5		4.7		
			2	1.6		1.9		2.7		4.9		
			3	1.6		1.9	2.4	2.7		5.0	12.7	
I_{LPM4}	Low-power mode 4[8][4]	3.0 V	0	1.3		1.6	2.0	2.3		4.4	11.1	µA
			1	1.4		1.6		2.4		4.5		
			2	1.4		1.7		2.5		4.8		
			3	1.4		1.7	2.2	2.5		4.8	12.2	
$I_{LPM3.5}$	Low-power mode 3.5, RTC active on AUXVCC3[9]	2.2 V		0.65		0.80		0.90		1.30		µA
		3.0 V		1.16		1.24	2.05	1.43		1.87	2.71	
$I_{LPM4.5}$	Low-power mode 4.5[10]	3.0 V		0.70		0.78	1.05	0.90		1.20	1.85	µA

(1) All inputs are tied to 0 V or to V_{CC}. Outputs do not source or sink any current.
(2) The currents are characterized with a Micro Crystal MS1V-T1K crystal with a load capacitance of 12.5 pF. The internal and external load capacitance are chosen to closely match the required 12.5 pF.
(3) Current for watchdog timer clocked by SMCLK included. ACLK = low-frequency crystal operation (XTS = 0, XT1DRIVEx = 0).
CPUOFF = 1, SCG0 = 0, SCG1 = 0, OSCOFF = 0 (LPM0), f_{ACLK} = 32768 Hz, f_{MCLK} = 0 MHz, f_{SMCLK} = f_{DCO} = 1 MHz
(4) Current for brownout, high-side supervisor (SVS_H) normal mode included. Low-side supervisor (SVS_L) and low-side monitor (SVM_L) disabled. High-side monitor (SVM_H) disabled. RAM retention enabled.
(5) Current for watchdog timer clocked by ACLK and RTC clocked by XT1 included. ACLK = low-frequency crystal operation (XTS = 0, XT1DRIVEx = 0).
CPUOFF = 1, SCG0 = 0, SCG1 = 1, OSCOFF = 0 (LPM2), f_{ACLK} = 32768 Hz, f_{MCLK} = 0 MHz, f_{SMCLK} = f_{DCO} = 0 MHz, DCO setting = 1-MHz operation, DCO bias generator enabled.
(6) Current for watchdog timer clocked by ACLK and RTC clocked by XT1 included. ACLK = low-frequency crystal operation (XTS = 0, XT1DRIVEx = 0).
CPUOFF = 1, SCG0 = 1, SCG1 = 1, OSCOFF = 0 (LPM3), f_{ACLK} = 32768 Hz, f_{MCLK} = f_{SMCLK} = f_{DCO} = 0 MHz
(7) Current for watchdog timer clocked by ACLK included. RTC is disabled (RTCHOLD = 1). ACLK = VLO.
CPUOFF = 1, SCG0 = 1, SCG1 = 1, OSCOFF = 0 (LPM3), f_{ACLK} = f_{VLO}, f_{MCLK} = f_{SMCLK} = f_{DCO} = 0 MHz
(8) CPUOFF = 1, SCG0 = 1, SCG1 = 1, OSCOFF = 1 (LPM4), f_{DCO} = f_{ACLK} = f_{MCLK} = f_{SMCLK} = 0 MHz
(9) f_{DCO} = f_{MCLK} = f_{SMCLK} = 0 MHz, f_{ACLK} = 32768 Hz, PMMREGOFF = 1, RTC active on AUXVCC3 supply
(10) f_{DCO} = f_{MCLK} = f_{SMCLK} = 0 MHz, f_{ACLK} = 0 Hz, PMMREGOFF = 1

Copyright © 2011–2018, Texas Instruments Incorporated

5.6 Low-Power Mode With LCD Supply Currents (Into V_{CC}) Excluding External Current

over recommended ranges of supply voltage and operating free-air temperature (unless otherwise noted)[1][2]

PARAMETER		V_{CC}	PMMCOREVx	TEMPERATURE (T_A)								UNIT
				–40°C		25°C		60°C		85°C		
				TYP	MAX	TYP	MAX	TYP	MAX	TYP	MAX	
I_{LPM3} LCD, int. bias	Low-power mode 3 (LPM3) current, LCD 4-mux mode, internal biasing, charge pump disabled[3][4]	2.2 V	0	2.4		2.9	3.6	3.8		5.8	12.2	µA
			1	2.5		3.1		4.0		6.0		
			2	2.6		3.3	3.9	4.2		6.3	13.4	
I_{LPM3} LCD, int. bias	Low-power mode 3 (LPM3) current, LCD 4-mux mode, internal biasing, charge pump disabled[3][4]	3.0 V	0	2.8		3.2	3.9	4.1		6.4	13.3	µA
			1	2.9		3.4		4.3		6.7		
			2	3.1		3.6		4.5		7.0		
			3	3.1		3.6	4.5	4.5		7.0	14.7	
I_{LPM3} LCD,CP	Low-power mode 3 (LPM3) current, LCD 4-mux mode, internal biasing, charge pump enabled[3][5]	2.2 V	0			3.8						µA
			1			3.9						
			2			4.0						
		3.0 V	0			4.0						
			1			4.1						
			2			4.2						
			3			4.2						

(1) All inputs are tied to 0 V or to V_{CC}. Outputs do not source or sink any current.
(2) The currents are characterized with a Micro Crystal MS1V-T1K crystal with a load capacitance of 12.5 pF. The internal and external load capacitance are chosen to closely match the required 12.5 pF.
(3) Current for watchdog timer clocked by ACLK and RTC clocked by XT1 included. ACLK = low-frequency crystal operation (XTS = 0, XT1DRIVEx = 0).
CPUOFF = 1, SCG0 = 1, SCG1 = 1, OSCOFF = 0 (LPM3), f_{ACLK} = 32768 Hz, $f_{MCLK} = f_{SMCLK} = f_{DCO}$ = 0 MHz
Current for brownout, high-side supervisor (SVS_H) normal mode included. Low-side supervisor (SVS_L) and low-side monitor (SVM_L) disabled. High-side monitor (SVM_H) disabled. RAM retention enabled.
(4) LCDMx = 11 (4-mux mode), LCDREXT = 0, LCDEXTBIAS = 0 (internal biasing), LCD2B = 0 (1/3 bias), LCDCPEN = 0 (charge pump disabled), LCDSSEL = 0, LCDPREx = 101, LCDDIVx = 00011 (f_{LCD} = 32768 Hz / 32 / 4 = 256 Hz)
Even segments S0, S2, ... = 0 and odd segments S1, S3, ... = 1. No LCD panel load.
(5) LCDMx = 11 (4-mux mode), LCDREXT = 0, LCDEXTBIAS = 0 (internal biasing), LCD2B = 0 (1/3 bias), LCDCPEN = 1 (charge pump enabled), VLCDx = 1000 (V_{LCD} = 3 V, typical), LCDSSEL = 0, LCDPREx = 101, LCDDIVx = 00011 (f_{LCD} = 32768 Hz / 32 / 4 = 256 Hz)
Even segments S0, S2, ... = 0 and odd segments S1, S3, ... = 1. No LCD panel load.

Copyright © 2011–2018, Texas Instruments Incorporated

5.7 Thermal Resistance Characteristics

THERMAL METRIC[(1) (2)]			VALUE	UNIT
$R\theta_{JA}$	Junction-to-ambient thermal resistance, still air	LQFP 80 (PN)	46.3	°C/W
		LQFP 100 (PZ)	45.6	
$R\theta_{JC(TOP)}$	Junction-to-case (top) thermal resistance	LQFP 80 (PN)	11.5	°C/W
		LQFP 100 (PZ)	11.0	
$R\theta_{JC(BOTTOM)}$	Junction-to-case (bottom) thermal resistance	LQFP 80 (PN)	N/A[(3)]	°C/W
		LQFP 100 (PZ)	N/A	
$R\theta_{JB}$	Junction-to-board thermal resistance	LQFP 80 (PN)	21.9	°C/W
		LQFP 100 (PZ)	23.4	
Ψ_{JT}	Junction-to-package-top thermal characterization parameter	LQFP 80 (PN)	0.5	°C/W
		LQFP 100 (PZ)	0.4	
Ψ_{JB}	Junction-to-board thermal characterization parameter	LQFP 80 (PN)	21.6	°C/W
		LQFP 100 (PZ)	23.0	

(1) For more information about traditional and new thermal metrics, see *Semiconductor and IC Package Thermal Metrics*.
(2) These values are based on a JEDEC-defined 2S2P system (with the exception of the Theta JC [$R\theta_{JC}$] value, which is based on a JEDEC-defined 1S0P system) and will change based on environment as well as application. For more information, see these EIA/JEDEC standards:
- JESD51-2, *Integrated Circuits Thermal Test Method Environmental Conditions - Natural Convection (Still Air)*
- JESD51-3, *Low Effective Thermal Conductivity Test Board for Leaded Surface Mount Packages*
- JESD51-7, *High Effective Thermal Conductivity Test Board for Leaded Surface Mount Packages*
- JESD51-9, *Test Boards for Area Array Surface Mount Package Thermal Measurements*

(3) N/A = not applicable

5.8 Digital I/O Ports

Table 5-1 lists the characteristics of the schmitt-trigger Inputs.

Table 5-1. Schmitt-Trigger Inputs – General-Purpose I/O

over recommended ranges of supply voltage and operating free-air temperature (unless otherwise noted)

PARAMETER		TEST CONDITIONS	V_{CC}	MIN	TYP	MAX	UNIT
V_{IT+}	Positive-going input threshold voltage		1.8 V	0.80		1.40	V
			3 V	1.50		2.10	
V_{IT-}	Negative-going input threshold voltage		1.8 V	0.45		1.00	V
			3 V	0.75		1.65	
V_{hys}	Input voltage hysteresis ($V_{IT+} – V_{IT-}$)		1.8 V	0.3		0.85	V
			3 V	0.4		1.0	
R_{Pull}	Pullup or pulldown resistor (1)	For pullup: $V_{IN} = V_{SS}$ For pulldown: $V_{IN} = V_{CC}$		20	35	50	kΩ
C_I	Input capacitance	$V_{IN} = V_{SS}$ or V_{CC}			5		pF

(1) Also applies to $\overline{RST}$ pin when pullup or pulldown resistor is enabled.

Table 5-2 lists the characteristics of the P1 and P2 inputs.

Table 5-2. Inputs – Ports P1 and P2 (1)

over recommended ranges of supply voltage and operating free-air temperature (unless otherwise noted)

PARAMETER		TEST CONDITIONS	V_{CC}	MIN	MAX	UNIT
$t_{(int)}$	External interrupt timing (2)	Port P1, P2: P1.x to P2.x, External trigger pulse duration to set interrupt flag	2.2 V, 3 V	20		ns

(1) Some devices may contain additional ports with interrupts. See the block diagram and terminal function descriptions.
(2) An external signal sets the interrupt flag every time the minimum interrupt pulse duration $t_{(int)}$ is met. It might be set by trigger signals shorter than $t_{(int)}$.

Table 5-3 lists the characteristics of the GPIO leakage current.

Table 5-3. Leakage Current – General-Purpose I/O

over recommended ranges of supply voltage and operating free-air temperature (unless otherwise noted)

PARAMETER		TEST CONDITIONS	V_{CC}	MIN	MAX	UNIT
$I_{lkg(Px.y)}$	High-impedance leakage current	See (1)(2)	1.8 V, 3 V		±50	nA

(1) The leakage current is measured with V_{SS} or V_{CC} applied to the corresponding pins, unless otherwise noted.
(2) The leakage of the digital port pins is measured individually. The port pin is selected for input and the pullup or pulldown resistor is disabled.

Table 5-4 lists the characteristics of the full drive strength GPIO output.

Table 5-4. Outputs – General-Purpose I/O (Full Drive Strength)

over recommended ranges of supply voltage and operating free-air temperature (unless otherwise noted)

PARAMETER		TEST CONDITIONS	V_{CC}	MIN	MAX	UNIT
V_{OH}	High-level output voltage	$I_{(OHmax)} = –3$ mA (1)	1.8 V	$V_{CC} – 0.25$	V_{CC}	V
		$I_{(OHmax)} = –10$ mA (1)		$V_{CC} – 0.60$	V_{CC}	
		$I_{(OHmax)} = –5$ mA (1)	3 V	$V_{CC} – 0.25$	V_{CC}	
		$I_{(OHmax)} = –15$ mA (1)		$V_{CC} – 0.60$	V_{CC}	
V_{OL}	Low-level output voltage	$I_{(OLmax)} = 3$ mA (2)	1.8 V	V_{SS}	$V_{SS} + 0.25$	V
		$I_{(OLmax)} = 10$ mA (3)		V_{SS}	$V_{SS} + 0.60$	
		$I_{(OLmax)} = 5$ mA (2)	3 V	V_{SS}	$V_{SS} + 0.25$	
		$I_{(OLmax)} = 15$ mA (3)		V_{SS}	$V_{SS} + 0.60$	

(1) The maximum total current, $I_{(OHmax)}$, for all outputs combined should not exceed ±20 mA to hold the maximum voltage drop specified. See Section 5.3 for more details.
(2) The maximum total current, $I_{(OLmax)}$, for all outputs combined should not exceed ±48 mA to hold the maximum voltage drop specified.
(3) The maximum total current, $I_{(OLmax)}$, for all outputs combined should not exceed ±100 mA to hold the maximum voltage drop specified.

Copyright © 2011–2018, Texas Instruments Incorporated

5.8.1 Typical Characteristics – General-Purpose I/O (Full Drive Strength)

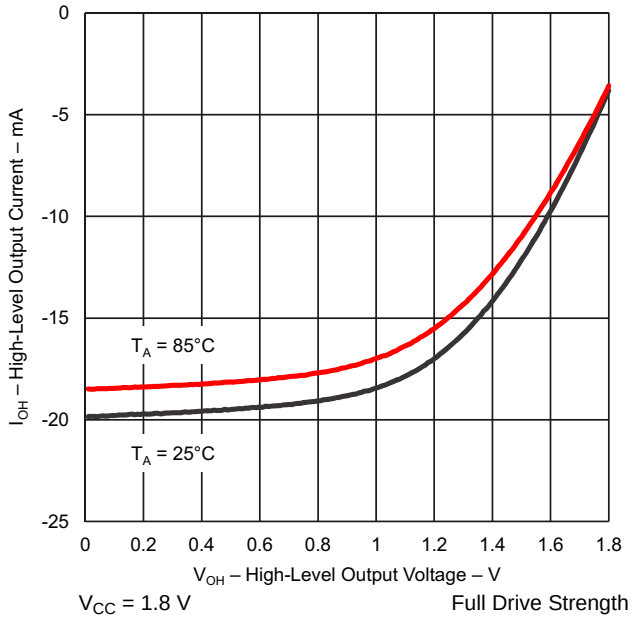

Figure 5-2. High-Level Output Current vs High-Level Output Voltage

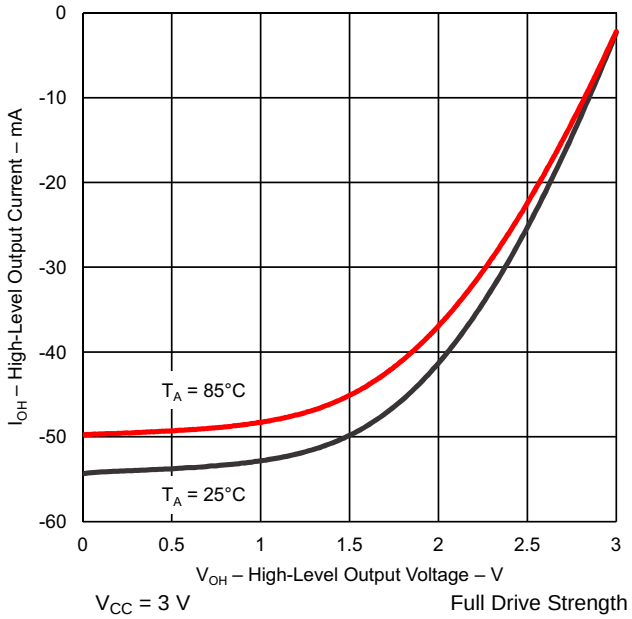

Figure 5-3. High-Level Output Current vs High-Level Output Voltage

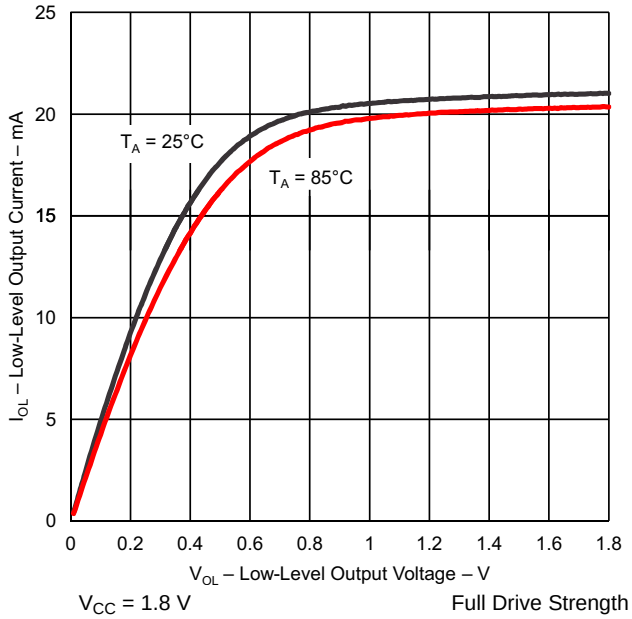

Figure 5-4. Low-Level Output Current vs Low-Level Output Voltage

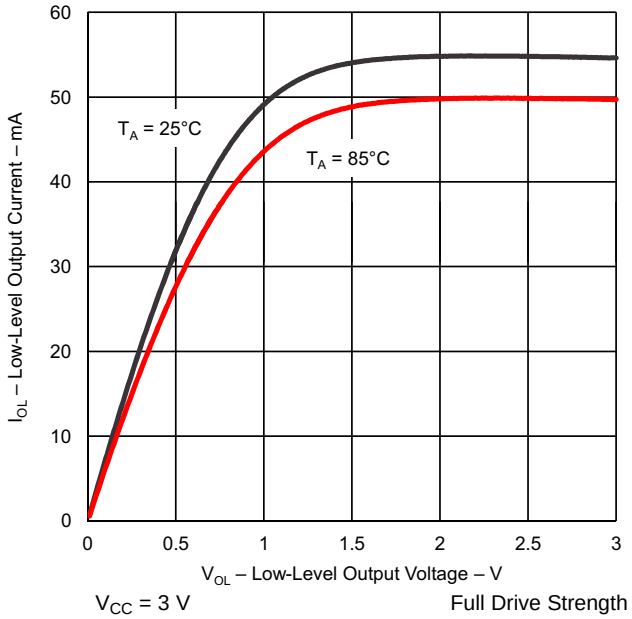

Figure 5-5. Low-Level Output Current vs Low-Level Output Voltage

Table 5-5 lists the characteristics of the reduced drive strength GPIO output.

Table 5-5. Outputs – General-Purpose I/O (Reduced Drive Strength)

over recommended ranges of supply voltage and operating free-air temperature (unless otherwise noted)[1]

PARAMETER		TEST CONDITIONS	V_{CC}	MIN	MAX	UNIT
V_{OH}	High-level output voltage	$I_{(OHmax)}$ = –1 mA[2]	1.8 V	V_{CC} – 0.25	V_{CC}	V
		$I_{(OHmax)}$ = –3 mA[2]		V_{CC} – 0.60	V_{CC}	
		$I_{(OHmax)}$ = –2 mA[2]	3.0 V	V_{CC} – 0.25	V_{CC}	
		$I_{(OHmax)}$ = –6 mA[2]		V_{CC} – 0.60	V_{CC}	
V_{OL}	Low-level output voltage	$I_{(OLmax)}$ = 1 mA[3]	1.8 V	V_{SS}	V_{SS} + 0.25	V
		$I_{(OLmax)}$ = 3 mA[4]		V_{SS}	V_{SS} + 0.60	
		$I_{(OLmax)}$ = 2 mA[3]	3.0 V	V_{SS}	V_{SS} + 0.25	
		$I_{(OLmax)}$ = 6 mA[4]		V_{SS}	V_{SS} + 0.60	

(1) Selecting reduced drive strength may reduce EMI.
(2) The maximum total current, $I_{(OHmax)}$, for all outputs combined should not exceed ±20 mA to hold the maximum voltage drop specified. See Section 5.3 for more details.
(3) The maximum total current, $I_{(OLmax)}$, for all outputs combined, should not exceed ±48 mA to hold the maximum voltage drop specified.
(4) The maximum total current, $I_{(OLmax)}$, for all outputs combined, should not exceed ±100 mA to hold the maximum voltage drop specified.

Copyright © 2011–2018, Texas Instruments Incorporated

5.8.2 Typical Characteristics – General-Purpose I/O (Reduced Drive Strength)

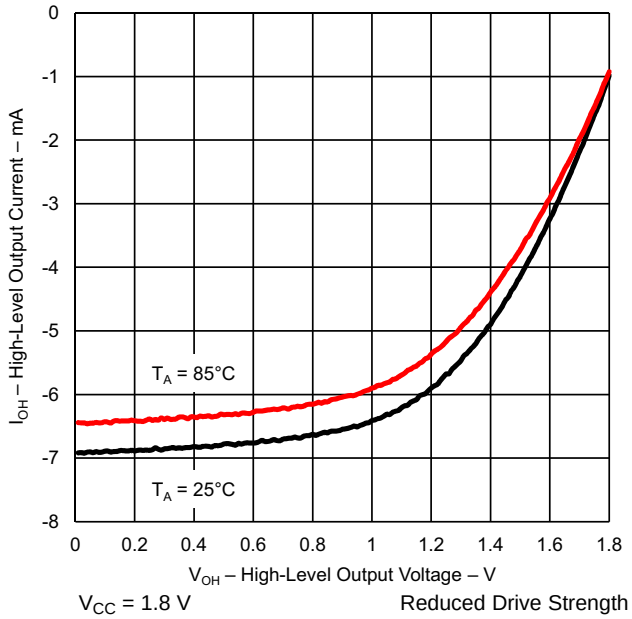

Figure 5-6. High-Level Output Current vs High-Level Output Voltage

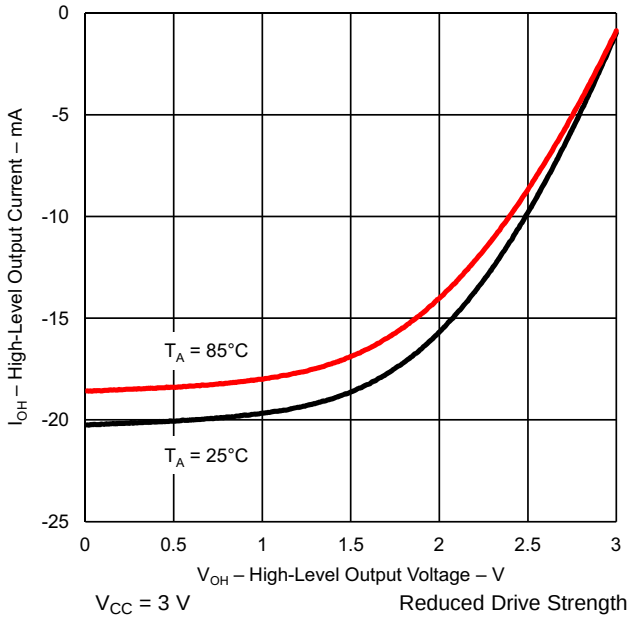

Figure 5-7. High-Level Output Current vs High-Level Output Voltage

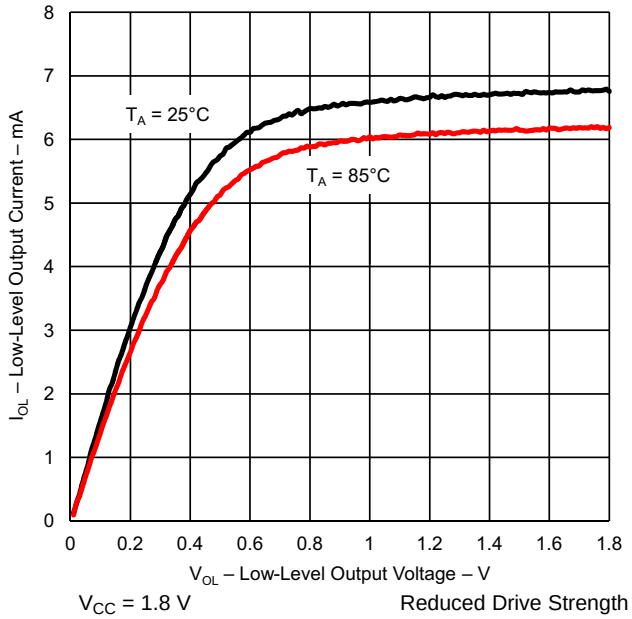

Figure 5-8. Low-Level Output Current vs Low-Level Output Voltage

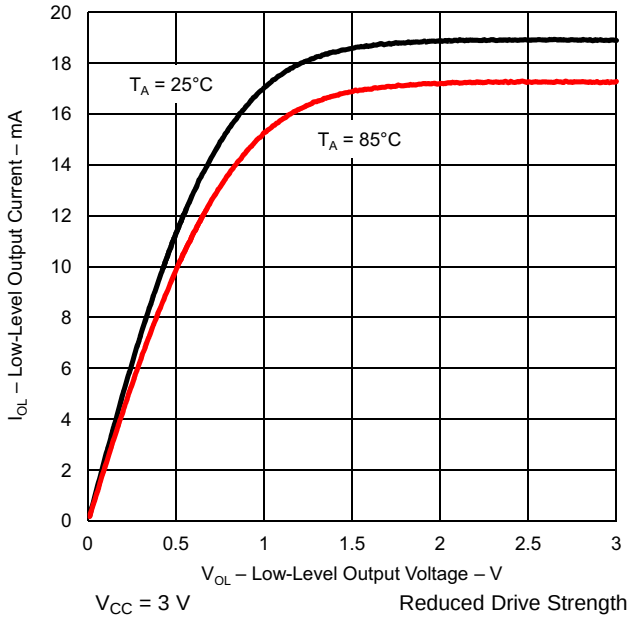

Figure 5-9. Low-Level Output Current vs Low-Level Output Voltage

Table 5-6 lists the characteristics of the GPIO output frequency.

Table 5-6. Output Frequency – General-Purpose I/O

over recommended ranges of supply voltage and operating free-air temperature (unless otherwise noted)

PARAMETER		TEST CONDITIONS		MIN	MAX	UNIT
$f_{Px.y}$	Port output frequency (with load)	See (1)(2)	V_{CC} = 1.8 V, PMMCOREVx = 0		16	MHz
			V_{CC} = 3 V, PMMCOREVx = 3		25	
f_{Port_CLK}	Clock output frequency	ACLK, SMCLK, MCLK, C_L = 20 pF(2)	V_{CC} = 1.8 V, PMMCOREVx = 0		16	MHz
			V_{CC} = 3 V, PMMCOREVx = 3		25	

(1) A resistive divider with 2 × R1 between V_{CC} and V_{SS} is used as load. The output is connected to the center tap of the divider. For full drive strength, R1 = 550 Ω. For reduced drive strength, R1 = 1.6 kΩ. C_L = 20 pF is connected to the output to V_{SS}.
(2) The output voltage reaches at least 10% and 90% V_{CC} at the specified toggle frequency.

Copyright © 2011–2018, Texas Instruments Incorporated

5.9 Clock Specifications

Table 5-7 lists the characteristics of the XT1 oscillator in low-frequency mode.

Table 5-7. Crystal Oscillator, XT1, Low-Frequency Mode(1)

over recommended ranges of supply voltage and operating free-air temperature (unless otherwise noted)

PARAMETER		TEST CONDITIONS	V_{CC}	MIN	TYP	MAX	UNIT
$\Delta I_{DVCC.LF}$	Differential XT1 oscillator crystal current consumption from lowest drive setting, LF mode	f_{OSC} = 32768 Hz, XTS = 0, XT1BYPASS = 0, XT1DRIVEx = 1, T_A = 25°C	3.0 V		0.075		µA
		f_{OSC} = 32768 Hz, XTS = 0, XT1BYPASS = 0, XT1DRIVEx = 2, T_A = 25°C			0.170		
		f_{OSC} = 32768 Hz, XTS = 0, XT1BYPASS = 0, XT1DRIVEx = 3, T_A = 25°C			0.290		
$f_{XT1,LF0}$	XT1 oscillator crystal frequency, LF mode	XTS = 0, XT1BYPASS = 0			32768		Hz
$f_{XT1,LF,SW}$	XT1 oscillator logic-level square-wave input frequency, LF mode	XTS = 0, XT1BYPASS = 1(2) (3)		10	32.768	50	kHz
OA_{LF}	Oscillation allowance for LF crystals(4)	XTS = 0, XT1BYPASS = 0, XT1DRIVEx = 0, $f_{XT1,LF}$ = 32768 Hz, $C_{L,eff}$ = 6 pF			210		kΩ
		XTS = 0, XT1BYPASS = 0, XT1DRIVEx = 1, $f_{XT1,LF}$ = 32768 Hz, $C_{L,eff}$ = 12 pF			300		
$C_{L,eff}$	Integrated effective load capacitance, LF mode(5)	XTS = 0, XCAPx = 0(6)			1		pF
		XTS = 0, XCAPx = 1			5.5		
		XTS = 0, XCAPx = 2			8.5		
		XTS = 0, XCAPx = 3			12.0		
	Duty cycle, LF mode	XTS = 0, Measured at ACLK, $f_{XT1,LF}$ = 32768 Hz		30%		70%	
$f_{Fault,LF}$	Oscillator fault frequency, LF mode(7)	XTS = 0(8)		10		10000	Hz
$t_{START,LF}$	Start-up time, LF mode	f_{OSC} = 32768 Hz, XTS = 0, XT1BYPASS = 0, XT1DRIVEx = 0, T_A = 25°C, $C_{L,eff}$ = 6 pF	3.0 V		1000		ms
		f_{OSC} = 32768 Hz, XTS = 0, XT1BYPASS = 0, XT1DRIVEx = 3, T_A = 25°C, $C_{L,eff}$ = 12 pF			500		

(1) To improve EMI on the XT1 oscillator, the following guidelines should be observed.
- Keep the trace between the device and the crystal as short as possible.
- Design a good ground plane around the oscillator pins.
- Prevent crosstalk from other clock or data lines into oscillator pins XIN and XOUT.
- Avoid running PCB traces underneath or adjacent to the XIN and XOUT pins.
- Use assembly materials and processes that avoid any parasitic load on the oscillator XIN and XOUT pins.
- If conformal coating is used, make sure that it does not induce capacitive or resistive leakage between the oscillator pins.

(2) When XT1BYPASS is set, XT1 circuits are automatically powered down. Input signal is a digital square wave with parametrics defined in the Schmitt-trigger inputs section of this data sheet.

(3) Maximum frequency of operation of the entire device cannot be exceeded.

(4) Oscillation allowance is based on a safety factor of 5 for recommended crystals. The oscillation allowance is a function of the XT1DRIVEx settings and the effective load. In general, comparable oscillator allowance can be achieved based on the following guidelines, but should be evaluated based on the actual crystal selected for the application:
- For XT1DRIVEx = 0, $C_{L,eff} \le 6$ pF.
- For XT1DRIVEx = 1, 6 pF $\le C_{L,eff} \le$ 9 pF.
- For XT1DRIVEx = 2, 6 pF $\le C_{L,eff} \le$ 10 pF.
- For XT1DRIVEx = 3, $C_{L,eff} \ge 6$ pF.

(5) Includes parasitic bond and package capacitance (approximately 2 pF per pin).
Because the PCB adds additional capacitance, TI recommends verifying the correct load by measuring the ACLK frequency. For a correct setup, the effective load capacitance should always match the specification of the used crystal.

(6) Requires external capacitors at both terminals. Values are specified by crystal manufacturers.

(7) Frequencies below the MIN specification set the fault flag. Frequencies above the MAX specification do not set the fault flag. Frequencies between the MIN and MAX specifications might set the flag.

(8) Measured with logic-level input frequency but also applies to operation with crystals.

Table 5-8 lists the characteristics of the VLO.

Table 5-8. Internal Very-Low-Power Low-Frequency Oscillator (VLO)

over recommended ranges of supply voltage and operating free-air temperature (unless otherwise noted)

PARAMETER		TEST CONDITIONS	V_{CC}	MIN	TYP	MAX	UNIT
f_{VLO}	VLO frequency	Measured at ACLK	1.8 V to 3.6 V	6	9.4	15	kHz
df_{VLO}/d_T	VLO frequency temperature drift	Measured at ACLK(1)	1.8 V to 3.6 V		0.5		%/°C
df_{VLO}/dV_{CC}	VLO frequency supply voltage drift	Measured at ACLK(2)	1.8 V to 3.6 V		4		%/V
	Duty cycle	Measured at ACLK	1.8 V to 3.6 V	30%		70%	

(1) Calculated using the box method: (MAX(–40°C to 85ºC) – MIN(–40°C to 85ºC)) / MIN(–40°C to 85ºC) / (85ºC – (–40ºC))
(2) Calculated using the box method: (MAX(1.8 V to 3.6 V) – MIN(1.8 V to 3.6 V)) / MIN(1.8 V to 3.6 V) / (3.6 V – 1.8 V)

Table 5-9 lists the characteristics of the REFO.

Table 5-9. Internal Reference, Low-Frequency Oscillator (REFO)

over recommended ranges of supply voltage and operating free-air temperature (unless otherwise noted)

PARAMETER		TEST CONDITIONS	V_{CC}	MIN	TYP	MAX	UNIT
I_{REFO}	REFO oscillator current consumption	T_A = 25°C	1.8 V to 3.6 V		3		µA
f_{REFO}	REFO frequency calibrated	Measured at ACLK	1.8 V to 3.6 V		32768		Hz
	REFO absolute tolerance calibrated	Full temperature range	1.8 V to 3.6 V			±3.5%	
		T_A = 25°C	3 V			±1.5%	
df_{REFO}/d_T	REFO frequency temperature drift	Measured at ACLK(1)	1.8 V to 3.6 V		0.01		%/°C
df_{REFO}/dV_{CC}	REFO frequency supply voltage drift	Measured at ACLK(2)	1.8 V to 3.6 V		1.0		%/V
	Duty cycle	Measured at ACLK	1.8 V to 3.6 V	40%	50%	60%	
t_{START}	REFO start-up time	40%/60% duty cycle	1.8 V to 3.6 V		25		µs

(1) Calculated using the box method: (MAX(–40°C to 85ºC) – MIN(–40°C to 85ºC)) / MIN(–40°C to 85ºC) / (85ºC – (–40ºC))
(2) Calculated using the box method: (MAX(1.8 V to 3.6 V) – MIN(1.8 V to 3.6 V)) / MIN(1.8 V to 3.6 V) / (3.6 V – 1.8 V)

Copyright © 2011–2018, Texas Instruments Incorporated

Table 5-10 lists the frequency characteristics of the DCO.

Table 5-10. DCO Frequency

over recommended ranges of supply voltage and operating free-air temperature (unless otherwise noted)

PARAMETER		TEST CONDITIONS	MIN	TYP	MAX	UNIT
$f_{DCO(0,0)}$	DCO frequency (0, 0)(1)	DCORSELx = 0, DCOx = 0, MODx = 0	0.07		0.20	MHz
$f_{DCO(0,31)}$	DCO frequency (0, 31)(1)	DCORSELx = 0, DCOx = 31, MODx = 0	0.70		1.70	MHz
$f_{DCO(1,0)}$	DCO frequency (1, 0)(1)	DCORSELx = 1, DCOx = 0, MODx = 0	0.15		0.36	MHz
$f_{DCO(1,31)}$	DCO frequency (1, 31)(1)	DCORSELx = 1, DCOx = 31, MODx = 0	1.47		3.45	MHz
$f_{DCO(2,0)}$	DCO frequency (2, 0)(1)	DCORSELx = 2, DCOx = 0, MODx = 0	0.32		0.75	MHz
$f_{DCO(2,31)}$	DCO frequency (2, 31)(1)	DCORSELx = 2, DCOx = 31, MODx = 0	3.17		7.38	MHz
$f_{DCO(3,0)}$	DCO frequency (3, 0)(1)	DCORSELx = 3, DCOx = 0, MODx = 0	0.64		1.51	MHz
$f_{DCO(3,31)}$	DCO frequency (3, 31)(1)	DCORSELx = 3, DCOx = 31, MODx = 0	6.07		14.0	MHz
$f_{DCO(4,0)}$	DCO frequency (4, 0)(1)	DCORSELx = 4, DCOx = 0, MODx = 0	1.3		3.2	MHz
$f_{DCO(4,31)}$	DCO frequency (4, 31)(1)	DCORSELx = 4, DCOx = 31, MODx = 0	12.3		28.2	MHz
$f_{DCO(5,0)}$	DCO frequency (5, 0)(1)	DCORSELx = 5, DCOx = 0, MODx = 0	2.5		6.0	MHz
$f_{DCO(5,31)}$	DCO frequency (5, 31)(1)	DCORSELx = 5, DCOx = 31, MODx = 0	23.7		54.1	MHz
$f_{DCO(6,0)}$	DCO frequency (6, 0)(1)	DCORSELx = 6, DCOx = 0, MODx = 0	4.6		10.7	MHz
$f_{DCO(6,31)}$	DCO frequency (6, 31)(1)	DCORSELx = 6, DCOx = 31, MODx = 0	39.0		88.0	MHz
$f_{DCO(7,0)}$	DCO frequency (7, 0)(1)	DCORSELx = 7, DCOx = 0, MODx = 0	8.5		19.6	MHz
$f_{DCO(7,31)}$	DCO frequency (7, 31)(1)	DCORSELx = 7, DCOx = 31, MODx = 0	60		135	MHz
$S_{DCORSEL}$	Frequency step between range DCORSEL and DCORSEL + 1	$S_{RSEL} = f_{DCO(DCORSEL+1,DCO)}/f_{DCO(DCORSEL,DCO)}$	1.2		2.3	ratio
S_{DCO}	Frequency step between tap DCO and DCO + 1	$S_{DCO} = f_{DCO(DCORSEL,DCO+1)}/f_{DCO(DCORSEL,DCO)}$	1.02		1.12	ratio
	Duty cycle	Measured at SMCLK	40%	50%	60%	
df_{DCO}/dT	DCO frequency temperature drift	f_{DCO} = 1 MHz		0.1		%/°C
df_{DCO}/dV_{CORE}	DCO frequency voltage drift	f_{DCO} = 1 MHz		1.9		%/V

(1) When selecting the proper DCO frequency range (DCORSELx), the target DCO frequency, f_{DCO}, should be set to reside within the range of $f_{DCO(n,\ 0),MAX} \le f_{DCO} \le f_{DCO(n,\ 31),MIN}$, where $f_{DCO(n,\ 0),MAX}$ represents the maximum frequency specified for the DCO frequency, range n, tap 0 (DCOx = 0) and $f_{DCO(n,31),MIN}$ represents the minimum frequency specified for the DCO frequency, range n, tap 31 (DCOx = 31). This ensures that the target DCO frequency resides within the range selected. If the actual f_{DCO} frequency for the selected range causes the FLL or the application to select tap 0 or 31, the DCO fault flag is set to report that the selected range is at its minimum or maximum tap setting.

Figure 5-10. Typical DCO Frequency

5.10 Power-Management Module (PMM)

Table 5-11 lists the brownout characteristics of the PMM.

Table 5-11. PMM, Brownout Reset (BOR)

over recommended ranges of supply voltage and operating free-air temperature (unless otherwise noted)

PARAMETER		TEST CONDITIONS	MIN	TYP	MAX	UNIT
$V_{(DVCC_BOR_IT-)}$	BOR_H on voltage, DV_{CC} falling level	$\lvert dDV_{CC}/d_t \rvert < 3$ V/s			1.45	V
$V_{(DVCC_BOR_IT+)}$	BOR_H off voltage, DV_{CC} rising level	$\lvert dDV_{CC}/d_t \rvert < 3$ V/s	0.80	1.30	1.50	V
$V_{(DVCC_BOR_hys)}$	BOR_H hysteresis		50		250	mV
t_{RESET} (1)	Pulse duration required at $\overline{RST}$/NMI pin to accept a reset		2			µs

(1) Pulse much shorter than 2 µs might trigger reset.

Table 5-12 lists the core voltage characteristics of the PMM.

Table 5-12. PMM, Core Voltage

over recommended ranges of supply voltage and operating free-air temperature (unless otherwise noted)

PARAMETER		TEST CONDITIONS	MIN	TYP	MAX	UNIT
V_{CORE3}(AM)	Core voltage, active mode, PMMCOREV = 3	2.4 V ≤ DV_{CC} ≤ 3.6 V		1.93		V
V_{CORE2}(AM)	Core voltage, active mode, PMMCOREV = 2	2.2 V ≤ DV_{CC} ≤ 3.6 V		1.83		V
V_{CORE1}(AM)	Core voltage, active mode, PMMCOREV = 1	2.0 V ≤ DV_{CC} ≤ 3.6 V		1.62		V
V_{CORE0}(AM)	Core voltage, active mode, PMMCOREV = 0	1.8 V ≤ DV_{CC} ≤ 3.6 V		1.42		V
V_{CORE3}(LPM)	Core voltage, low-current mode, PMMCOREV = 3	2.4 V ≤ DV_{CC} ≤ 3.6 V		1.96		V
V_{CORE2}(LPM)	Core voltage, low-current mode, PMMCOREV = 2	2.2 V ≤ DV_{CC} ≤ 3.6 V		1.94		V
V_{CORE1}(LPM)	Core voltage, low-current mode, PMMCOREV = 1	2.0 V ≤ DV_{CC} ≤ 3.6 V		1.74		V
V_{CORE0}(LPM)	Core voltage, low-current mode, PMMCOREV = 0	1.8 V ≤ DV_{CC} ≤ 3.6 V		1.54		V

Copyright © 2011–2018, Texas Instruments Incorporated

Table 5-13 lists the characteristics of the high-side SVS.

Table 5-13. PMM, SVS High Side

over recommended ranges of supply voltage and operating free-air temperature (unless otherwise noted)

PARAMETER		TEST CONDITIONS	MIN	TYP	MAX	UNIT
$I_{(SVSH)}$	SVS current consumption	SVSHE = 0, DV_{CC} = 3.6 V		0		nA
		SVSHE = 1, DV_{CC} = 3.6 V, SVSHFP = 0		200		
		SVSHE = 1, DV_{CC} = 3.6 V, SVSHFP = 1		1.5		µA
$V_{(SVSH_IT-)}$	SVS_H on voltage level(1)	SVSHE = 1, SVSHRVL = 0	1.60	1.65	1.70	V
		SVSHE = 1, SVSHRVL = 1	1.77	1.84	1.90	
		SVSHE = 1, SVSHRVL = 2	1.97	2.04	2.10	
		SVSHE = 1, SVSHRVL = 3	2.09	2.16	2.23	
$V_{(SVSH_IT+)}$	SVS_H off voltage level(1)	SVSHE = 1, SVSMHRRL = 0	1.68	1.74	1.80	V
		SVSHE = 1, SVSMHRRL = 1	1.89	1.95	2.01	
		SVSHE = 1, SVSMHRRL = 2	2.08	2.14	2.21	
		SVSHE = 1, SVSMHRRL = 3	2.21	2.27	2.34	
		SVSHE = 1, SVSMHRRL = 4	2.35	2.41	2.49	
		SVSHE = 1, SVSMHRRL = 5	2.65	2.72	2.80	
		SVSHE = 1, SVSMHRRL = 6	2.96	3.04	3.13	
		SVSHE = 1, SVSMHRRL = 7	2.96	3.04	3.13	
$t_{pd(SVSH)}$	SVS_H propagation delay	SVSHE = 1, dV_{DVCC}/dt = 10 mV/µs, SVSHFP = 1		2.5		µs
		SVSHE = 1, dV_{DVCC}/dt = 1 mV/µs, SVSHFP = 0		20		
$t_{(SVSH)}$	SVS_H on or off delay time	SVSHE = 0 → 1, SVSHFP = 1		12.5		µs
		SVSHE = 0 → 1, SVSHFP = 0		100		
dV_{DVCC}/dt	DV_{CC} rise time		0		1000	V/s

(1) The SVS_H settings available depend on the VCORE (PMMCOREVx) setting. Refer to the *Power Management Module and Supply Voltage Supervisor* chapter in the *MSP430x5xx and MSP430x6xx Family User's Guide* on recommended settings and usage.

Table 5-14 lists the characteristics of the high-side SVM.

Table 5-14. PMM, SVM High Side

over recommended ranges of supply voltage and operating free-air temperature (unless otherwise noted)

PARAMETER		TEST CONDITIONS	MIN	TYP	MAX	UNIT
$I_{(SVMH)}$	SVM_H current consumption	SVMHE = 0, DV_{CC} = 3.6 V		0		nA
		SVMHE = 1, DV_{CC} = 3.6 V, SVMHFP = 0		200		
		SVMHE = 1, DV_{CC} = 3.6 V, SVMHFP = 1		1.5		µA
$V_{(SVMH)}$	SVM_H on or off voltage level(1)	SVMHE = 1, SVSMHRRL = 0	1.68	1.74	1.80	V
		SVMHE = 1, SVSMHRRL = 1	1.89	1.95	2.01	
		SVMHE = 1, SVSMHRRL = 2	2.08	2.14	2.21	
		SVMHE = 1, SVSMHRRL = 3	2.21	2.27	2.34	
		SVMHE = 1, SVSMHRRL = 4	2.35	2.41	2.49	
		SVMHE = 1, SVSMHRRL = 5	2.65	2.72	2.80	
		SVMHE = 1, SVSMHRRL = 6	2.96	3.04	3.13	
		SVMHE = 1, SVSMHRRL = 7	2.96	3.04	3.13	
		SVMHE = 1, SVMHOVPE = 1		3.79		
$t_{pd(SVMH)}$	SVM_H propagation delay	SVMHE = 1, dV_{DVCC}/dt = 10 mV/µs, SVMHFP = 1		2.5		µs
		SVMHE = 1, dV_{DVCC}/dt = 1 mV/µs, SVMHFP = 0		20		
$t_{(SVMH)}$	SVM_H on or off delay time	SVMHE = 0 → 1, SVMHFP = 1		12.5		µs
		SVMHE = 0 → 1, SVMHFP = 0		100		

(1) The SVM_H settings available depend on the VCORE (PMMCOREVx) setting. Refer to the *Power Management Module and Supply Voltage Supervisor* chapter in the *MSP430x5xx and MSP430x6xx Family User's Guide* on recommended settings and usage.

Copyright © 2011–2018, Texas Instruments Incorporated

Table 5-15 lists the characteristics of the low-side SVS.

Table 5-15. PMM, SVS Low Side

over recommended ranges of supply voltage and operating free-air temperature (unless otherwise noted)

PARAMETER		TEST CONDITIONS	MIN	TYP	MAX	UNIT
$I_{(SVSL)}$	SVS_L current consumption	SVSLE = 0, PMMCOREV = 2		0		nA
		SVSLE = 1, PMMCOREV = 2, SVSLFP = 0		200		
		SVSLE = 1, PMMCOREV = 2, SVSLFP = 1		1.5		µA
$t_{pd(SVSL)}$	SVS_L propagation delay	SVSLE = 1, dV_{CORE}/dt = 10 mV/µs, SVSLFP = 1		2.5		µs
		SVSLE = 1, dV_{CORE}/dt = 1 mV/µs, SVSLFP = 0		20		
$t_{(SVSL)}$	SVS_L on or off delay time	SVSLE = 0 → 1, SVSLFP = 1		12.5		µs
		SVSLE = 0 → 1, SVSLFP = 0		100		

Table 5-16 lists the characteristics of the low-side SVM.

Table 5-16. PMM, SVM Low Side

over recommended ranges of supply voltage and operating free-air temperature (unless otherwise noted)

PARAMETER		TEST CONDITIONS	MIN	TYP	MAX	UNIT
$I_{(SVML)}$	SVM_L current consumption	SVMLE = 0, PMMCOREV = 2		0		nA
		SVMLE = 1, PMMCOREV = 2, SVMLFP = 0		200		
		SVMLE = 1, PMMCOREV = 2, SVMLFP = 1		1.5		µA
$t_{pd(SVML)}$	SVM_L propagation delay	SVMLE = 1, dV_{CORE}/dt = 10 mV/µs, SVMLFP = 1		2.5		µs
		SVMLE = 1, dV_{CORE}/dt = 1 mV/µs, SVMLFP = 0		20		
$t_{(SVML)}$	SVM_L on or off delay time	SVMLE = 0 → 1, SVMLFP = 1		12.5		µs
		SVMLE = 0 → 1, SVMLFP = 0		100		

Table 5-17 lists the wake-up times.

Table 5-17. Wake-up Times From Low-Power Modes and Reset

over recommended ranges of supply voltage and operating free-air temperature (unless otherwise noted)

PARAMETER		TEST CONDITIONS		MIN	TYP	MAX	UNIT
$t_{WAKE-UP-FAST}$	Wake-up time from LPM2, LPM3, or LPM4 to active mode(1)	PMMCOREV = SVSMLRRL = n (where n = 0, 1, 2, or 3), SVSLFP = 1	f_{MCLK} ≥ 4 MHz		3	5	µs
			1 MHz < f_{MCLK} < 4 MHz		4	6	
$t_{WAKE-UP-SLOW}$	Wake-up time from LPM2, LPM3, or LPM4 to active mode(2)(3)	PMMCOREV = SVSMLRRL = n (where n = 0, 1, 2, or 3), SVSLFP = 0			150	160	µs
$t_{WAKE-UP-LPM4.5}$	Wake-up time from LPM4.5 to active mode(4)				2	3	ms
$t_{WAKE-UP-RESET}$	Wake-up time from $\overline{RST}$ or BOR event to active mode(4)				2	3	ms

(1) This value represents the time from the wake-up event to the first active edge of MCLK. The wake-up time depends on the performance mode of the low-side supervisor (SVS_L) and low-side monitor (SVM_L). $t_{WAKE-UP-FAST}$ is possible with SVS_L and SVM_L in full performance mode or disabled. For specific register settings, see the *Low-Side SVS and SVM Control and Performance Mode Selection* section in the *Power Management Module and Supply Voltage Supervisor* chapter of the *MSP430x5xx and MSP430x6xx Family User's Guide*.
(2) This value represents the time from the wake-up event to the first active edge of MCLK. The wake-up time depends on the performance mode of the low-side supervisor (SVS_L) and low-side monitor (SVM_L). $t_{WAKE-UP-SLOW}$ is set with SVS_L and SVM_L in normal mode (low current mode). For specific register settings, see the *Low-Side SVS and SVM Control and Performance Mode Selection* section in the *Power Management Module and Supply Voltage Supervisor* chapter of the *MSP430x5xx and MSP430x6xx Family User's Guide*.
(3) The wake-up times from LPM0 and LPM1 to AM are not specified. They are proportional to MCLK cycle time but are not affected by the performance mode settings as for LPM2, LPM3, and LPM4.
(4) This value represents the time from the wake-up event to the reset vector execution.

Copyright © 2011–2018, Texas Instruments Incorporated

5.11 Auxiliary Supplies

Table 5-18 lists the operating conditions of the auxiliary supplies.

Table 5-18. Auxiliary Supplies, Recommended Operating Conditions

over operating free-air temperature range (unless otherwise noted)

			MIN	NOM	MAX	UNIT
V_{CC}	Supply voltage range for all supplies at pins DVCC, AVCC, AUXVCC1, AUXVCC2, AUXVCC3		1.8		3.6	V
V_{DSYS}	Digital system supply voltage range, $V_{DSYS} = V_{CC} – R_{ON} × I_{LOAD}$	PMMCOREVx = 0	1.8		3.6	V
		PMMCOREVx = 1	2.0		3.6	
		PMMCOREVx = 2	2.2		3.6	
		PMMCOREVx = 3	2.4		3.6	
V_{ASYS}	Analog system supply voltage range, $V_{ASYS} = V_{CC} – R_{ON} × I_{LOAD}$		See module specifications			V
C_{VCC}, $C_{AUX1/2}$	Recommended capacitor at pins DVCC, AVCC, AUXVCC1, AUXVCC2			4.7		µF
C_{VSYS}	Recommended capacitor at pins VDSYS and VASYS			4.7		µF
C_{VCORE}	Recommended capacitance at VCORE pin			0.47		µF
C_{AUX3}	Recommended capacitor at pin AUXVCC3			0.47		µF

Table 5-19 lists the current consumption of AUX3.

Table 5-19. Auxiliary Supplies, AUXVCC3 (Backup Subsystem) Currents

over operating free-air temperature range (unless otherwise noted)

PARAMETER		TEST CONDITIONS	V_{CC}	T_A	MIN	TYP	MAX	UNIT
$I_{AUX3,RTCon}$	AUXVCC3 current with RTC enabled	RTC and 32-kHz oscillator in backup subsystem enabled	3 V	25°C			0.83	µA
				85°C			0.95	
$I_{AUX3,RTCoff}$	AUXVCC3 current with RTC disabled	RTC and 32-kHz oscillator in backup subsystem disabled	3 V	25°C			110	nA
				85°C			165	

Table 5-20 lists the characteristics of the auxiliary supply monitor.

Table 5-20. Auxiliary Supplies, Auxiliary Supply Monitor

over operating free-air temperature range (unless otherwise noted)

PARAMETER		TEST CONDITIONS	V_{CC}	MIN	TYP	MAX	UNIT
$I_{CC,Monitor}$	Average supply current for monitoring circuitry drawn from VDSYS	LOCKAUX = 0, AUXMRx = 0, AUX0MD = 0, AUX1MD = 0, AUX2MD = 1, VDSYS = DVCC, VASYS = AVCC, Current measured at VDSYS pin (also see Figure 5-11)	3 V			0.70	µA
$I_{Meas,Monitor}$	Average current drawn from monitored supply during measurement cycle	LOCKAUX = 0, AUXMRx = 0, AUX0MD = 0, AUX1MD = 0, AUX2MD = 1, VDSYS = DVCC, VASYS = AVCC, AUXVCC1 = 3 V, Current measured at AUXVCC1 pin (also see Figure 5-12)				0.11	µA
$V_{Monitor}$	Auxiliary supply threshold level	AUXLVLx = 0		1.67	1.74	1.80	V
		AUXLVLx = 1		1.87	1.95	2.01	
		AUXLVLx = 2		2.06	2.14	2.21	
		AUXLVLx = 3		2.19	2.27	2.33	
		AUXLVLx = 4		2.33	2.41	2.48	
		AUXLVLx = 5		2.63	2.72	2.79	
		AUXLVLx = 6		2.91	3.02	3.10	
		AUXLVLx = 7		2.91	3.02	3.10	

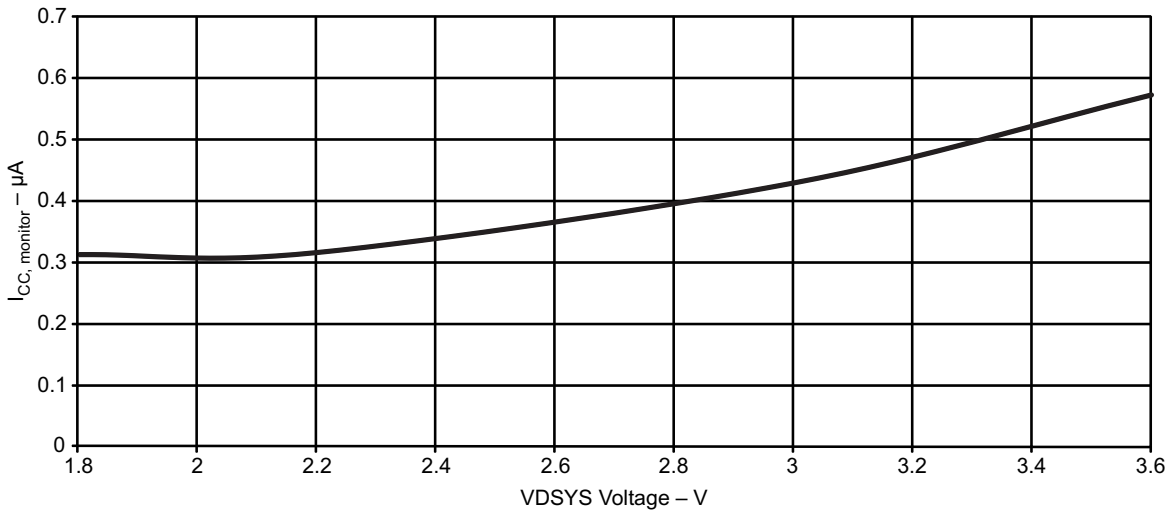

Figure 5-11. VDSYS Voltage vs $I_{CC,Monitor}$

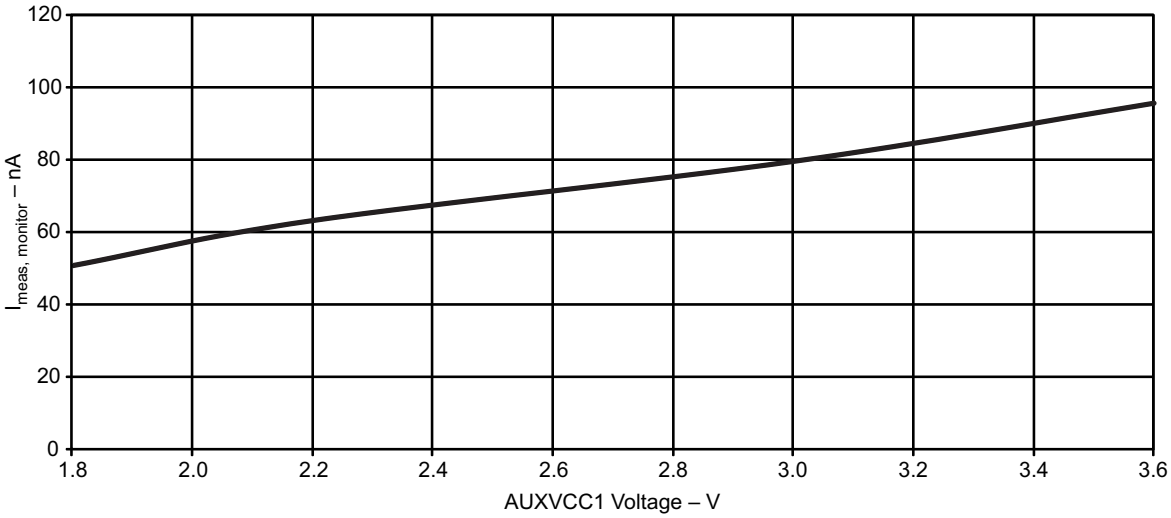

Figure 5-12. AUXVCC1 Voltage vs $I_{Meas,Monitor}$

Table 5-21 lists the ON-resistance characteristics of the auxiliary supplies.

Table 5-21. Auxiliary Supplies, Switch ON-Resistance

over operating free-air temperature range (unless otherwise noted)

PARAMETER		TEST CONDITIONS	MIN	TYP	MAX	UNIT
$R_{ON,DVCC}$	ON-resistance of switch between DVCC and VDSYS	$I_{LOAD} = I_{CORE} + I_{IO}$ = 10 mA + 10 mA = 20 mA			5	Ω
$R_{ON,DAUX1}$	ON-resistance of switch between AUXVCC1 and VDSYS	$I_{LOAD} = I_{CORE} + I_{IO}$ = 10 mA + 10 mA = 20 mA			5	Ω
$R_{ON,DAUX2}$	ON-resistance of switch between AUXVCC2 and VDSYS	$I_{LOAD} = I_{CORE} + I_{IO}$ = 10 mA + 10 mA = 20 mA			5	Ω
$R_{ON,AVCC}$	ON-resistance of switch between AVCC and V_{ASYS}	$I_{LOAD} = I_{Modules}$ = 10 mA			5	Ω
$R_{ON,AAUX1}$	ON-resistance of switch between AUXVCC1 and V_{ASYS}	$I_{LOAD} = I_{Modules}$ = 5 mA			20	Ω
$R_{ON,AAUX2}$	ON-resistance of switch between AUXVCC2 and V_{ASYS}	$I_{LOAD} = I_{Modules}$ = 5 mA			20	Ω

Copyright © 2011–2018, Texas Instruments Incorporated

Table 5-22 lists the switching times of the auxiliary supplies.

Table 5-22. Auxiliary Supplies, Switching Time

over operating free-air temperature range (unless otherwise noted)

PARAMETER		MIN	MAX	UNIT
t_{Switch}	Time from occurence of trigger (SVM or software) to "new" supply connected to system supplies		100	ns
$t_{Recover}$	"Recovery time" after a switch over took place; during this time, no further switching takes place	200	450	µs

Table 5-23 lists the switch leakage of the auxiliary supplies.

Table 5-23. Auxiliary Supplies, Switch Leakage

over operating free-air temperature range (unless otherwise noted)

PARAMETER		TEST CONDITIONS	MIN	TYP	MAX	UNIT
$I_{SW,Lkg}$	Current into DVCC, AVCC, AUXVCC1, or AUXVCC2 if not selected	Per supply (but not the highest supply)		50	100	nA
I_{Vmax}	Current drawn from highest supply			450	730	nA

Table 5-24 lists the characteristics of the auxiliary supplies to ADC10_A.

Table 5-24. Auxiliary Supplies, Auxiliary Supplies to ADC10_A

over operating free-air temperature range (unless otherwise noted)

PARAMETER		TEST CONDITIONS		V_{CC}	MIN	TYP	MAX	UNIT
V_3	Supply voltage divider $V_3 = V_{Supply}/3$			1.8 V	0.58	0.60	0.62	V
				3.0 V	0.98	1.00	1.02	
				3.6 V	1.18	1.20	1.22	
R_{V3}	Load resistance	AUXADCRx = 0					18	kΩ
		AUXADCRx = 1					1.5	
		AUXADCRx = 2					0.6	
$t_{Sample,V3}$	Sampling time required if V_3 selected	AUXADC = 1, ADC10ON = 1, INCH = 0Ch, Error of conversion result ≤ 1 LSB	AUXADCRx = 0		1000			ns
			AUXADCRx = 1		1000			
			AUXADCRx = 2		1000			

Table 5-25 lists the charge limiting resistor characteristics of the auxiliary supplies.

Table 5-25. Auxiliary Supplies, Charge Limiting Resistor

over operating free-air temperature range (unless otherwise noted)

PARAMETER		TEST CONDITIONS	V_{CC}	MIN	TYP	MAX	UNIT
R_{CHARGE}	Charge limiting resistor	AUXCHCx = 1	3 V			5	kΩ
		AUXCHCx = 2	3 V			10	
		AUXCHCx = 3	3 V			20	

5.12 Timer_A

Table 5-26 lists the characteristics of the Timer_A.

Table 5-26. Timer_A

over recommended ranges of supply voltage and operating free-air temperature (unless otherwise noted)

PARAMETER		TEST CONDITIONS	V_{CC}	MIN	MAX	UNIT
f_{TA}	Timer_A input clock frequency	Internal: SMCLK or ACLK, External: TACLK, Duty cycle = 50% ±10%	1.8 V, 3 V		25	MHz
$t_{TA,cap}$	Timer_A capture timing	All capture inputs, minimum pulse duration required for capture	1.8 V, 3 V	20		ns

5.13 eUSCI

Table 5-27. eUSCI (UART Mode) Clock Frequency

PARAMETER		CONDITIONS	V_{CC}	MIN	MAX	UNIT
f_{eUSCI}	eUSCI input clock frequency	Internal: SMCLK or ACLK, External: UCLK, Duty cycle = 50% ±10%			f_{SYSTEM}	MHz
f_{BITCLK}	BITCLK clock frequency (equals baud rate in MBaud)				5	MHz

Table 5-28 lists the switching characteristics of the eUSCI in UART mode.

Table 5-28. eUSCI (UART Mode) Switching Characteristics

over recommended ranges of supply voltage and operating free-air temperature (unless otherwise noted)

PARAMETER		TEST CONDITIONS	V_{CC}	MIN	TYP	MAX	UNIT
t_t	UART receive deglitch time(1)	UCGLITx = 0	2 V, 3 V	10	15	25	ns
		UCGLITx = 1		30	50	85	
		UCGLITx = 2		50	80	150	
		UCGLITx = 3		70	120	200	

(1) Pulses on the UART receive input (UCxRX) shorter than the UART receive deglitch time are suppressed. To ensure that pulses are correctly recognized their duration should exceed the maximum specification of the deglitch time.

Copyright © 2011–2018, Texas Instruments Incorporated

Table 5-29 lists the supported clock frequencies of the eUSCI in SPI master mode.

Table 5-29. eUSCI (SPI Master Mode) Clock Frequency

PARAMETER		CONDITIONS	V_{CC}	MIN	MAX	UNIT
f_{eUSCI}	eUSCI input clock frequency	Internal: SMCLK or ACLK, Duty cycle = 50% ±10%			f_{SYSTEM}	MHz

Table 5-30 lists the switching characteristics of the eUSCI in SPI master mode.

Table 5-30. eUSCI (SPI Master Mode) Switching Characteristics

over recommended ranges of supply voltage and operating free-air temperature (unless otherwise noted)(1)

PARAMETER		TEST CONDITIONS	V_{CC}	MIN	MAX	UNIT
$t_{STE,LEAD}$	STE lead time, STE active to clock	UCSTEM = 0, UCMODEx = 01 or 10	2 V, 3 V	150		ns
		UCSTEM = 1, UCMODEx = 01 or 10	2 V, 3 V	150		
$t_{STE,LAG}$	STE lag time, Last clock to STE inactive	UCSTEM = 0, UCMODEx = 01 or 10	2 V, 3 V	200		ns
		UCSTEM = 1, UCMODEx = 01 or 10	2 V, 3 V	200		
$t_{STE,ACC}$	STE access time, STE active to SIMO data out	UCSTEM = 0, UCMODEx = 01 or 10	2 V		50	ns
			3 V		30	
		UCSTEM = 1, UCMODEx = 01 or 10	2 V		50	
			3 V		30	
$t_{STE,DIS}$	STE disable time, STE inactive to SIMO high impedance	UCSTEM = 0, UCMODEx = 01 or 10	2 V		40	ns
			3 V		25	
		UCSTEM = 1, UCMODEx = 01 or 10	2 V		40	
			3 V		25	
$t_{SU,MI}$	SOMI input data setup time		2 V	50		ns
			3 V	30		
$t_{HD,MI}$	SOMI input data hold time		2 V	0		ns
			3 V	0		
$t_{VALID,MO}$	SIMO output data valid time(2)	UCLK edge to SIMO valid, C_L = 20 pF	2 V		9	ns
			3 V		5	
$t_{HD,MO}$	SIMO output data hold time(3)	C_L = 20 pF	2 V	0		ns
			3 V	0		

(1) $f_{UCxCLK} = 1/2t_{LO/HI}$ with $tL_{O/HI} = \max(t_{VALID,MO(eUSCI)} + t_{SU,SI(Slave)}, t_{SU,MI(eUSCI)} + t_{VALID,SO(Slave)})$
For the slave parameters $t_{SU,SI(Slave)}$ and $t_{VALID,SO(Slave)}$, see the SPI parameters of the attached slave.
(2) Specifies the time to drive the next valid data to the SIMO output after the output changing UCLK clock edge. See the timing diagrams in Figure 5-13 and Figure 5-14.
(3) Specifies how long data on the SIMO output is valid after the output changing UCLK clock edge. Negative values indicate that the data on the SIMO output can become invalid before the output changing clock edge observed on UCLK. See the timing diagrams in Figure 5-13 and Figure 5-14.

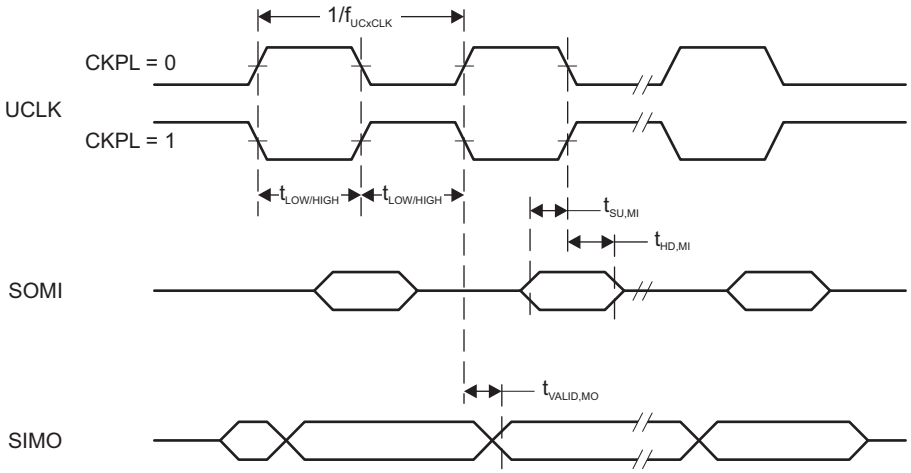

Figure 5-13. SPI Master Mode, CKPH = 0

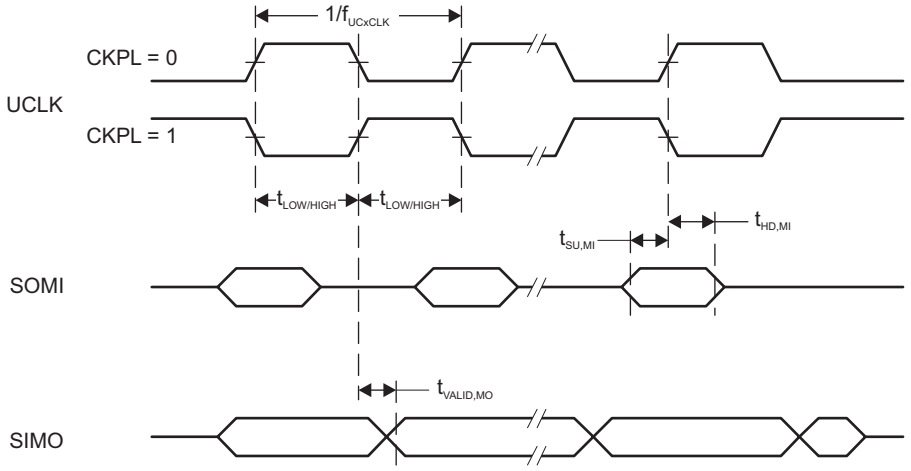

Figure 5-14. SPI Master Mode, CKPH = 1

Copyright © 2011–2018, Texas Instruments Incorporated

Table 5-31 lists the switching characteristics of the eUSCI in SPI slave mode.

Table 5-31. eUSCI (SPI Slave Mode)

over recommended ranges of supply voltage and operating free-air temperature (unless otherwise noted)(1)

PARAMETER		TEST CONDITIONS	V_{CC}	MIN	TYP	MAX	UNIT
$t_{STE,LEAD}$	STE lead time, STE active to clock		2.0 V	4			ns
			3.0 V	3			
$t_{STE,LAG}$	STE lag time, Last clock to STE inactive		2.0 V	0			ns
			3.0 V	0			
$t_{STE,ACC}$	STE access time, STE active to SOMI data out		2.0 V			46	ns
			3.0 V			24	
$t_{STE,DIS}$	STE disable time, STE inactive to SOMI high impedance		2.0 V			38	ns
			3.0 V			25	
$t_{SU,SI}$	SIMO input data setup time		2.0 V	2			ns
			3.0 V	1			
$t_{HD,SI}$	SIMO input data hold time		2.0 V	2			ns
			3.0 V	2			
$t_{VALID,SO}$	SOMI output data valid time(2)	UCLK edge to SOMI valid, C_L = 20 pF	2.0 V			55	ns
			3.0 V			32	
$t_{HD,SO}$	SOMI output data hold time(3)	C_L = 20 pF	2.0 V	24			ns
			3.0 V	16			

(1) $f_{UCxCLK} = 1/2t_{LO/HI}$ with $tL_{O/HI} = \max(t_{VALID,MO(Master)} + t_{SU,SI(eUSCI)}, t_{SU,MI(Master)} + t_{VALID,SO(eUSCI)})$
For the master parameters $t_{SU,MI(Master)}$ and $t_{VALID,MO(Master)}$, see the SPI parameters of the attached master.
(2) Specifies the time to drive the next valid data to the SOMI output after the output changing UCLK clock edge. See the timing diagrams in Figure 5-15 and Figure 5-16.
(3) Specifies how long data on the SOMI output is valid after the output changing UCLK clock edge. See the timing diagrams inFigure 5-15 and Figure 5-16.

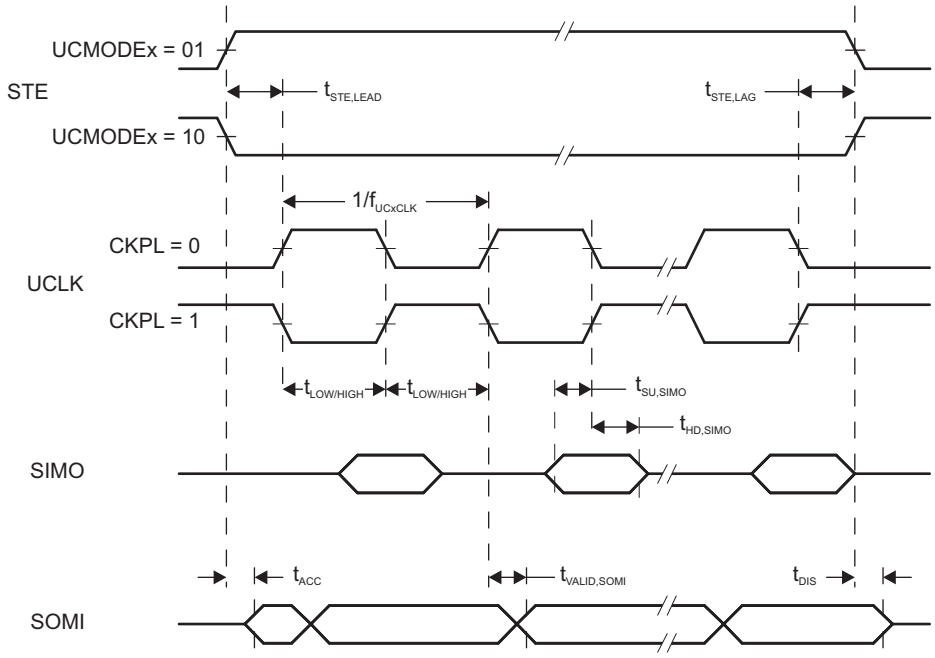

Figure 5-15. SPI Slave Mode, CKPH = 0

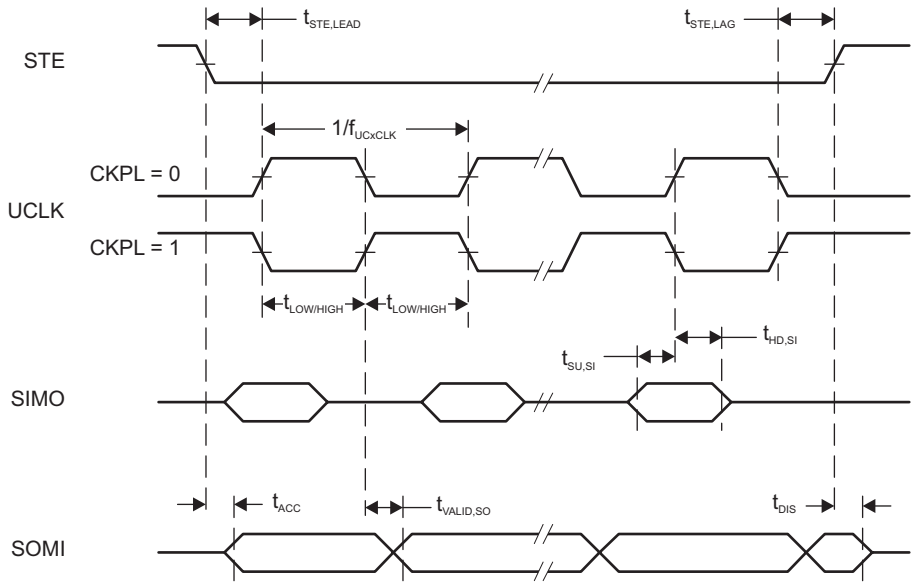

Figure 5-16. SPI Slave Mode, CKPH = 1

Copyright © 2011–2018, Texas Instruments Incorporated

Table 5-32 lists the switching characteristics of the eUSCI in I²C mode.

Table 5-32. eUSCI (I²C Mode)

over recommended ranges of supply voltage and operating free-air temperature (unless otherwise noted) (see Figure 5-17)

PARAMETER		TEST CONDITIONS	V_{CC}	MIN	TYP	MAX	UNIT
f_{eUSCI}	eUSCI input clock frequency	Internal: SMCLK, ACLK External: UCLK Duty cycle = 50% ±10%				f_{SYSTEM}	MHz
f_{SCL}	SCL clock frequency		2 V, 3 V	0		400	kHz
$t_{HD,STA}$	Hold time (repeated) START	f_{SCL} = 100 kHz	2 V, 3 V	5.1			µs
		f_{SCL} > 100 kHz		1.5			
$t_{SU,STA}$	Setup time for a repeated START	f_{SCL} = 100 kHz	2 V, 3 V	5.1			µs
		f_{SCL} > 100 kHz		1.4			
$t_{HD,DAT}$	Data hold time		2 V, 3 V	0.4			µs
$t_{SU,DAT}$	Data setup time	f_{SCL} = 100 kHz	2 V, 3 V	5.0			µs
		f_{SCL} > 100 kHz	2 V, 3 V	1.3			
$t_{SU,STO}$	Setup time for STOP	f_{SCL} = 100 kHz	2 V, 3 V	5.2			µs
		f_{SCL} > 100 kHz		1.7			
t_{SP}	Pulse duration of spikes suppressed by input filter	UCGLITx = 0	2 V, 3 V	75		220	ns
		UCGLITx = 1		35		120	
		UCGLITx = 2		30		60	
		UCGLITx = 3		20		35	
$t_{TIMEOUT}$	Clock low time-out	UCCLTOx = 1	2 V, 3 V		30		ms
		UCCLTOx = 2			33		
		UCCLTOx = 3			37		

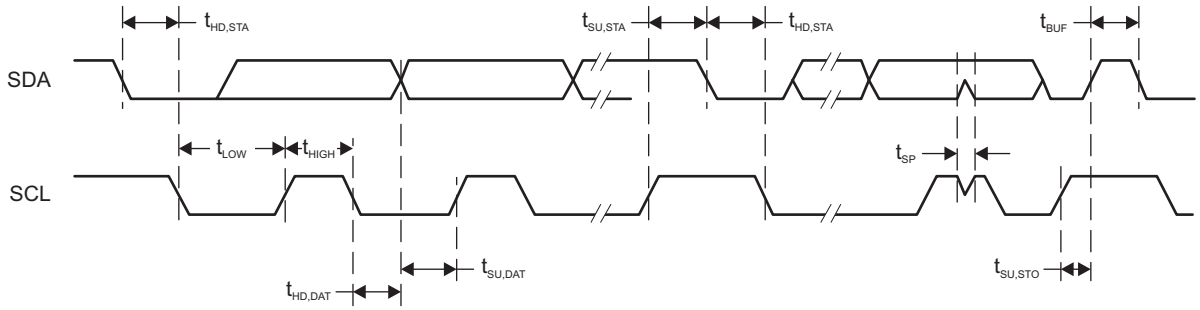

Figure 5-17. I²C Mode Timing

5.14 LCD Controller

Table 5-33 lists the recommended operating conditions of the LCD_C.

Table 5-33. LCD_C Recommended Operating Conditions

			MIN	NOM	MAX	UNIT
$V_{CC,LCD_C,CP\ en,3.6}$	Supply voltage range, charge pump enabled, $V_{LCD} \leq 3.6$ V	LCDCPEN = 1, 0000 < VLCDx ≤ 1111 (charge pump enabled, $V_{LCD} \leq 3.6$ V)	2.2		3.6	V
$V_{CC,LCD_C,CP\ en,3.3}$	Supply voltage range, charge pump enabled, $V_{LCD} \leq 3.3$ V	LCDCPEN = 1, 0000 < VLCDx ≤ 1100 (charge pump enabled, $V_{LCD} \leq 3.3$ V)	2.0		3.6	V
$V_{CC,LCD_C,int.\ bias}$	Supply voltage range, internal biasing, charge pump disabled	LCDCPEN = 0, VLCDEXT = 0	2.4		3.6	V
$V_{CC,LCD_C,ext.\ bias}$	Supply voltage range, external biasing, charge pump disabled	LCDCPEN = 0, VLCDEXT = 0	2.4		3.6	V
$V_{CC,LCD_C,VLCDEXT}$	Supply voltage range, external LCD voltage, internal or external biasing, charge pump disabled	LCDCPEN = 0, VLCDEXT = 1	2.0		3.6	V
$V_{LCDCAP/R33}$	External LCD voltage at LCDCAP/R33, internal or external biasing, charge pump disabled	LCDCPEN = 0, VLCDEXT = 1	2.4		3.6	V
C_{LCDCAP}	Capacitor on LCDCAP when charge pump enabled	LCDCPEN = 1, VLCDx > 0000 (charge pump enabled)		4.7	10	µF
f_{LCD}	LCD frequency range	$f_{FRAME} = 1/(2 \times mux) \times f_{LCD}$ with mux = 1 (static) to 8	0		1024	Hz
$f_{FRAME,4mux}$	LCD frame frequency range	$f_{FRAME,4mux}(MAX) = 1/(2 \times 4) \times f_{LCD}(MAX) = 1/(2 \times 4) \times 1024$ Hz			128	Hz
$f_{FRAME,8mux}$	LCD frame frequency range	$f_{FRAME,8mux}(MAX) = 1/(2 \times 4) \times f_{LCD}(MAX) = 1/(2 \times 8) \times 1024$ Hz			64	Hz
$f_{ACLK,in}$	ACLK input frequency range		30	32	40	kHz
C_{Panel}	Panel capacitance	100-Hz frame frequency			10000	pF
V_{R33}	Analog input voltage at R33	LCDCPEN = 0, VLCDEXT = 1	2.4		V_{CC} + 0.2	V
$V_{R23,1/3bias}$	Analog input voltage at R23	LCDREXT = 1, LCDEXTBIAS = 1, LCD2B = 0	V_{R13}	$V_{R03} + 2/3 \times (V_{R33}-V_{R03})$	V_{R33}	V
$V_{R13,1/3bias}$	Analog input voltage at R13 with 1/3 biasing	LCDREXT = 1, LCDEXTBIAS = 1, LCD2B = 0	V_{R03}	$V_{R03} + 1/3 \times (V_{R33}-V_{R03})$	V_{R23}	V
$V_{R13,1/2bias}$	Analog input voltage at R13 with 1/2 biasing	LCDREXT = 1, LCDEXTBIAS = 1, LCD2B = 1	V_{R03}	$V_{R03} + 1/2 \times (V_{R33}-V_{R03})$	V_{R33}	V
V_{R03}	Analog input voltage at R03	R0EXT = 1	V_{SS}			V
$V_{LCD}–V_{R03}$	Voltage difference between V_{LCD} and R03	LCDCPEN = 0, R0EXT = 1	2.4		V_{CC} + 0.2	V
$V_{LCDREF/R13}$	External LCD reference voltage applied at LCDREF/R13	VLCDREFx = 01	0.8	1.2	1.5	V

Copyright © 2011–2018, Texas Instruments Incorporated

Table 5-34 lists the characteristics of the LCD_C.

Table 5-34. LCD_C Electrical Characteristics

over operating free-air temperature range (unless otherwise noted)

PARAMETER		TEST CONDITIONS	V_{CC}	MIN	TYP	MAX	UNIT
V_{LCD}	LCD voltage	VLCDx = 0000, VLCDEXT = 0	2.4 V to 3.6 V		V_{CC}		V
		LCDCPEN = 1, VLCDx = 0001	2 V to 3.6 V		2.58		
		LCDCPEN = 1, VLCDx = 0010	2 V to 3.6 V		2.64		
		LCDCPEN = 1, VLCDx = 0011	2 V to 3.6 V		2.71		
		LCDCPEN = 1, VLCDx = 0100	2 V to 3.6 V		2.78		
		LCDCPEN = 1, VLCDx = 0101	2 V to 3.6 V		2.83		
		LCDCPEN = 1, VLCDx = 0110	2 V to 3.6 V		2.90		
		LCDCPEN = 1, VLCDx = 0111	2 V to 3.6 V		2.96		
		LCDCPEN = 1, VLCDx = 1000	2 V to 3.6 V		3.02		
		LCDCPEN = 1, VLCDx = 1001	2 V to 3.6 V		3.07		
		LCDCPEN = 1, VLCDx = 1010	2 V to 3.6 V		3.14		
		LCDCPEN = 1, VLCDx = 1011	2 V to 3.6 V		3.21		
		LCDCPEN = 1, VLCDx = 1100	2 V to 3.6 V		3.27		
		LCDCPEN = 1, VLCDx = 1101	2.2 V to 3.6 V		3.32		
		LCDCPEN = 1, VLCDx = 1110	2.2 V to 3.6 V		3.38		
		LCDCPEN = 1, VLCDx = 1111	2.2 V to 3.6 V		3.44	3.6	
$I_{CC,Peak,CP}$	Peak supply currents due to charge pump activities	LCDCPEN = 1, VLCDx = 1111	2.2 V		400		µA
$t_{LCD,CP,on}$	Time to charge C_{LCD} when discharged	C_{LCD} = 4.7µF, LCDCPEN = 0→1, VLCDx = 1111	2.2 V		150	500	ms
$I_{CP,Load}$	Maximum charge pump load current	LCDCPEN = 1, VLCDx = 1111	2.2 V	50			µA
$R_{LCD,Seg}$	LCD driver output impedance, segment lines	LCDCPEN = 1, VLCDx = 1000, I_{LOAD} = ±10 µA	2.2 V			10	kΩ
$R_{LCD,COM}$	LCD driver output impedance, common lines	LCDCPEN = 1, VLCDx = 1000, I_{LOAD} = ±10 µA	2.2 V			10	kΩ

5.15 SD24_B

Table 5-35 lists the power supply and recommended operating conditions of the SD24_B.

Table 5-35. SD24_B Power Supply and Recommended Operating Conditions

				MIN	TYP	MAX	UNIT
AV_{CC}	Analog supply voltage	$AV_{CC} = DV_{CC}$, $AV_{SS} = DV_{SS} = 0$ V		2.4		3.6	V
f_{SD}	Modulator clock frequency(1)			0.03		2.3	MHz
V_I	Absolute input voltage range			$AV_{SS} – 1$		AV_{CC}	V
V_{IC}	Common-mode input voltage range			$AV_{SS} – 1$		AV_{CC}	V
$V_{ID,FS}$	Differential full-scale input voltage	$V_{ID} = V_{I,A+} – V_{I,A–}$		$–V_{REF}$/GAIN		$+V_{REF}$/GAIN	mV
V_{ID}	Differential input voltage for specified performance(2)	SD24REFS = 1	SD24GAINx = 1	±910	±920		mV
			SD24GAINx = 2	±455	±460		
			SD24GAINx = 4	±227	±230		
			SD24GAINx = 8	±113	±115		
			SD24GAINx = 16	±57	±58		
			SD24GAINx = 32	±28	±29		
			SD24GAINx = 64	±14	±14.5		
			SD24GAINx = 128	±7	±7.2		
C_{REF}	VREF load capacitance(3)	SD24REFS = 1			100		nF

(1) Modulator clock frequency: MIN = 32.768 kHz – 10% ≈ 30 kHz. MAX = 32.768 kHz × 64 + 10% ≈ 2.3 MHz
(2) The full-scale range (FSR) is defined by $V_{FS+} = +V_{REF}$/GAIN and $V_{FS–} = –V_{REF}$/GAIN: FSR = $V_{FS+} – V_{FS–} = 2 \times V_{REF}$ / GAIN. If V_{REF} is sourced externally, the analog input range should not exceed 80% of V_{FS+} or $V_{FS–}$; that is, $V_{ID} = 0.8\ V_{FS–}$ to $0.8\ V_{FS+}$. If V_{REF} is sourced internally, the given V_{ID} ranges apply.
(3) There is no capacitance required on VREF. However, a capacitance of 100 nF is recommended to reduce any reference voltage noise.

Table 5-36 lists the analog input characteristics of the SD24_B.

Table 5-36. SD24_B Analog Input (1)

PARAMETER		TEST CONDITIONS		V_{CC}	MIN	TYP	MAX	UNIT
C_I	Input capacitance	SD24GAINx = 1				5		pF
		SD24GAINx = 2				5		
		SD24GAINx = 4				5		
		SD24GAINx = 8				5		
		SD24GAINx = 16				5		
		SD24GAINx = 32, 64, 128				5		
Z_I	Input impedance (Pin A+ or A- to AV_{SS})	f_{SD24} = 1 MHz	SD24GAINx = 1	3 V		200		kΩ
			SD24GAINx = 8	3 V		200		
			SD24GAINx = 32	3 V		200		
Z_{ID}	Differential input impedance (Pin A+ to pin A-)	f_{SD24} = 1 MHz	SD24GAINx = 1	3 V	300	400		kΩ
			SD24GAINx = 8	3 V		400		
			SD24GAINx = 32	3 V	300	400		

(1) All parameters pertain to each SD24_B converter.

Copyright © 2011–2018, Texas Instruments Incorporated

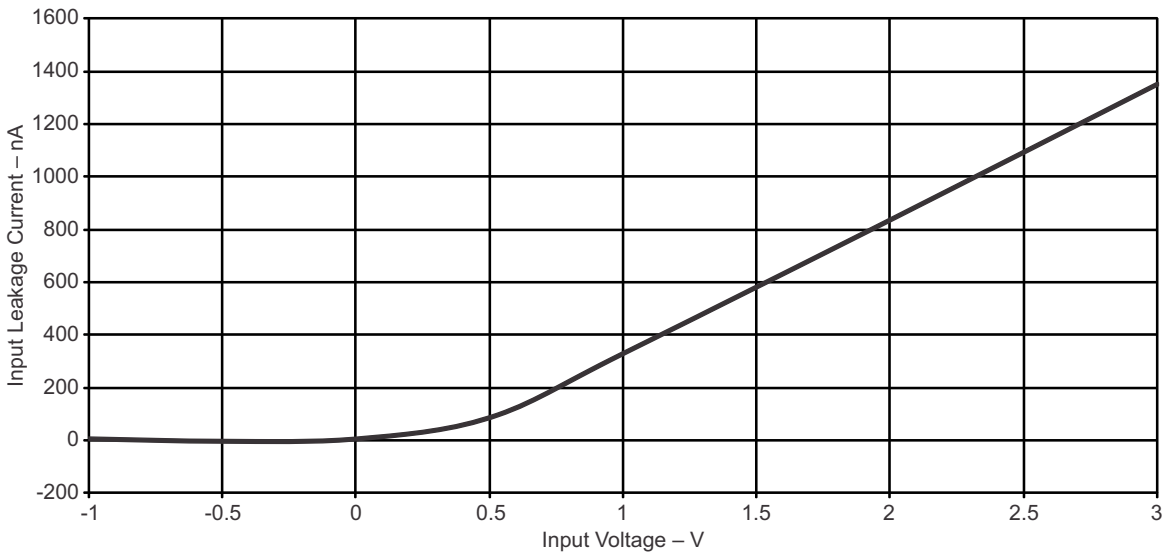

Figure 5-18. Input Leakage Current vs Input Voltage (Modulator OFF)

Table 5-37 lists the supply current of the SD24_B.

Table 5-37. SD24_B Supply Currents

PARAMETER		TEST CONDITIONS		V_{CC}	MIN	TYP	MAX	UNIT
$I_{SD,256}$	Analog plus digital supply current per converter (reference not included)	f_{SD24} = 1 MHz, SD24OSR = 256	SD24GAIN: 1	3 V		600	675	µA
			SD24GAIN: 2	3 V		600	675	
			SD24GAIN: 4	3 V		600	675	
			SD24GAIN: 8	3 V		700	750	
			SD24GAIN: 16	3 V		700	750	
			SD24GAIN: 32	3 V		775	850	
			SD24GAIN: 64	3 V		775	850	
			SD24GAIN: 128	3 V		775	850	
$I_{SD,512}$	Analog plus digital supply current per converter (reference not included)	f_{SD24} = 2 MHz, SD24OSR = 512	SD24GAIN: 1	3 V		750	800	µA
			SD24GAIN: 8	3 V		825	900	
			SD24GAIN: 32	3 V		900	1000	

Table 5-38 lists the performance characteristics of the SD24_B.

Table 5-38. SD24_B Performance

f_{SD24} = 1 MHz, SD24OSRx = 256, SD24REFS = 1

PARAMETER		TEST CONDITIONS	V_{CC}	MIN	TYP	MAX	UNIT
INL	Integral nonlinearity, end-point fit	SD24GAIN: 1	3 V	–0.01		0.01	% of FSR
		SD24GAIN: 8	3 V	–0.01		0.01	
		SD24GAIN: 32	3 V	–0.01		0.01	
G_{nom}	Nominal gain	SD24GAIN: 1	3 V		1		
		SD24GAIN: 2	3 V		2		
		SD24GAIN: 4	3 V		4		
		SD24GAIN: 8	3 V		8		
		SD24GAIN: 16	3 V		16		
		SD24GAIN: 32	3 V		31.7		
		SD24GAIN: 64	3 V		63.4		
		SD24GAIN: 128	3 V		126.8		

Copyright © 2011–2018, Texas Instruments Incorporated

Table 5-38. SD24_B Performance (continued)

f_{SD24} = 1 MHz, SD24OSRx = 256, SD24REFS = 1

PARAMETER		TEST CONDITIONS	V_{CC}	MIN	TYP	MAX	UNIT
E_G	Gain error (1)	SD24GAIN: 1, with external reference (1.2 V)	3 V	–1%		+1%	
		SD24GAIN: 8, with external reference (1.2 V)	3 V	–2%		+2%	
		SD24GAIN: 32, with external reference (1.2 V)	3 V	–2%		+2%	
$\Delta E_G/\Delta T$	Gain error temperature coefficient (2), internal reference	SD24GAIN: 1, 8, or 32 (with internal reference)	3 V			50	ppm/°C
$\Delta E_G/\Delta V_{CC}$	Gain error vs V_{CC} (3)	SD24GAIN: 1			0.15		%/V
		SD24GAIN: 8			0.15		
		SD24GAIN: 32			0.4		
E_{OS}[V]	Offset error (4)	SD24GAIN: 1 (with V_{diff} = 0 V)	3 V			2.3	mV
		SD24GAIN: 8	3 V			0.73	
		SD24GAIN: 32	3 V			0.18	
E_{OS}[FS]	Offset error (4)	SD24GAIN: 1 (with V_{diff} = 0 V)	3 V	–0.2		0.2	% FS
		SD24GAIN: 8	3 V	–0.5		0.5	
		SD24GAIN: 32	3 V	–0.5		0.5	
$\Delta E_{OS}/\Delta T$	Offset error temperature coefficient (5)	SD24GAIN: 1	3 V		1		µV/°C
		SD24GAIN: 8	3 V		0.15		
		SD24GAIN: 32	3 V		0.1		
$\Delta E_{OS}/\Delta V_{CC}$	Offset error vs V_{CC} (6)	SD24GAIN: 1			600		µV/V
		SD24GAIN: 8			100		
		SD24GAIN: 32			50		
CMRR,DC	Common-mode rejection at DC (7)	SD24GAIN: 1	3 V		–110		dB
		SD24GAIN: 8	3 V		–110		
		SD24GAIN: 32	3 V		–110		

(1) The gain error E_G specifies the deviation of the actual gain G_{act} from the nominal gain G_{nom}: $E_G = (G_{act} – G_{nom})/G_{nom}$. It covers process, temperature and supply voltage variations.

(2) The gain error temperature coefficient $\Delta E_G / \Delta T$ specifies the variation of the gain error E_G over temperature ($E_G(T) = (G_{act}(T) – G_{nom})/G_{nom}$) using the box method (that is, MIN and MAX values):
$\Delta E_G/ \Delta T = (MAX(E_G(T)) – MIN(E_G(T))) / (MAX(T) – MIN(T)) = (MAX(G_{act}(T)) – MIN(G_{act}(T)) / G_{nom} / (MAX(T) – MIN(T))$
with T ranging from –40°C to +85°C.

(3) The gain error vs V_{CC} coefficient $\Delta E_G/ \Delta V_{CC}$ specifies the variation of the gain error E_G over supply voltage ($E_G(V_{CC}) = (G_{act}(V_{CC}) – G_{nom})/G_{nom}$) using the box method (that is, MIN and MAX values):
$\Delta E_G/ \Delta V_{CC} = (MAX(E_G(V_{CC})) – MIN(E_G(V_{CC})) / (MAX(V_{CC}) – MIN(V_{CC})) = (MAX(G_{act}(V_{CC})) – MIN(G_{act}(V_{CC})) / G_{nom} / (MAX(V_{CC}) – MIN(V_{CC}))$
with V_{CC} ranging from 2.4 V to 3.6 V.

(4) The offset error E_{OS} is measured with shorted inputs in 2s-complement mode with +100% FS = V_{REF} / G and –100% FS = –V_{REF} / G. Conversion between E_{OS} [FS] and E_{OS} [V] is as follows: E_{OS} [FS] = E_{OS} [V]×G/V_{REF}; E_{OS} [V] = E_{OS} [FS]×V_{REF}/G.

(5) The offset error temperature coefficient $\Delta E_{OS} / \Delta T$ specifies the variation of the offset error E_{OS} over temperature using the box method (that is, MIN and MAX values):
$\Delta E_{OS} / \Delta T = (MAX(E_{OS}(T)) – MIN(E_{OS}(T)) / (MAX(T) – MIN(T))$
with T ranging from –40°C to +85°C.

(6) The offset error vs V_{CC} $\Delta E_{OS} / \Delta V_{CC}$ specifies the variation of the offset error E_{OS} over supply voltage using the box method (that is, MIN and MAX values):
$\Delta E_{OS} / \Delta V_{CC} = (MAX(E_{OS}(V_{CC})) – MIN(E_{OS}(V_{CC})) / (MAX(V_{CC}) – MIN(V_{CC}))$
with V_{CC} ranging from 2.4 V to 3.6 V.

(7) The DC CMRR specifies the change in the measured differential input voltage value when the common-mode voltage varies:
DC CMRR = $–20\log(\Delta_{MAX}/FSR)$ with Δ_{MAX} being the difference between the minium value and the maximum value measured when sweeping the common-mode voltage (for example, calculating with 16-bit FSR = 65536, a maximum change by 1 LSB results in $–20\log(1/65536) \approx –96$ dB) .
The DC CMRR is measured with both inputs connected to the common-mode voltage (that is, no differential input signal is applied), and the common-mode voltage is swept from –1 V to V_{CC}.

Copyright © 2011–2018, Texas Instruments Incorporated

Table 5-38. SD24_B Performance (continued)

f_{SD24} = 1 MHz, SD24OSRx = 256, SD24REFS = 1

PARAMETER		TEST CONDITIONS	V_{CC}	MIN	TYP	MAX	UNIT
CMRR,50Hz	Common-mode rejection at 50 Hz (8)	SD24GAIN: 1, f_{CM} = 50 Hz, V_{CM} = 930 mV	3 V		–110		dB
		SD24GAIN: 8, f_{CM} = 50 Hz, V_{CM} = 120 mV	3 V		–110		
		SD24GAIN: 32, f_{CM} = 50 Hz, V_{CM} = 30 mV	3 V		–110		
AC PSRR,ext	AC power supply rejection ratio, external reference (9)	SD24GAIN: 1, V_{CC} = 3 V + 50 mV × sin(2π × f_{Vcc} × t), f_{Vcc} = 50 Hz			–61		dB
		SD24GAIN: 8, V_{CC} = 3 V + 50 mV × sin(2π × f_{Vcc} × t), f_{Vcc} = 50 Hz			–77		
		SD24GAIN: 32, V_{CC} = 3 V + 50 mV × sin(2π × f_{Vcc} × t), f_{Vcc} = 50 Hz			–79		
AC PSRR,int	AC power supply rejection ratio, internal reference (9)	SD24GAIN: 1, V_{CC} = 3 V + 50 mV × sin(2π × f_{Vcc} × t), f_{Vcc} = 50 Hz			–61		dB
		SD24GAIN: 8, V_{CC} = 3 V + 50 mV × sin(2π × f_{Vcc} × t), f_{Vcc} = 50 Hz			–77		
		SD24GAIN: 32, V_{CC} = 3 V + 50 mV × sin(2π × f_{Vcc} × t), f_{Vcc} = 50 Hz			–79		
XT	Crosstalk between converters (10)	Crosstalk source: SD24GAIN: 1, Sine wave with maximum possible Vpp, f_{IN} = 50 Hz or 100 Hz, Converter under test: SD24GAIN: 1	3 V		–120		dB
		Crosstalk source: SD24GAIN: 1, Sine wave with maximum possible Vpp, f_{IN} = 50 Hz or 100 Hz, Converter under test: SD24GAIN: 8	3 V		–115		
		Crosstalk source: SD24GAIN: 1, Sine wave with maximum possible Vpp, f_{IN} = 50 Hz or 100 Hz, Converter under test: SD24GAIN: 32	3 V		–100		

(8) The AC CMRR is the difference between a hypothetical signal with the amplitude and frequency of the applied common-mode ripple applied to the inputs of the ADC and the actual common-mode signal spur visible in the FFT spectrum:
AC CMRR = Error Spur [dBFS] – 20log(V_{CM} / 1.2 V / G) [dBFS] with a common-mode signal of V_{CM} × sin(2π × f_{CM} × t) applied to the analog inputs.
The AC CMRR is measured with the both inputs connected to the common-mode signal (that is, no differential input signal is applied).
With the specified typical values the error spur is within the noise floor (as specified by the SINAD values).

(9) The AC PSRR is the difference between a hypothetical signal with the amplitude and frequency of the applied supply voltage ripple applied to the inputs of the ADC and the actual supply ripple spur visible in the FFT spectrum:
AC PSRR = Error Spur [dBFS] – 20log(50 mV / 1.2 V / G) [dBFS] with a signal of 50 mV × sin(2π × f_{Vcc} × t) added to V_{CC}.
The AC PSRR is measured with the inputs grounded (that is, no analog input signal is applied).
With the specified typical values the error spur is within the noise floor (as specified by the SINAD values).
SD24GAIN: 1 → Hypothetical signal: 20log(50 mV / 1.2 V / 1) = –27.6 dBFS
SD24GAIN: 8 → Hypothetical signal: 20log(50 mV / 1.2 V / 8) = –9.5 dBFS
SD24GAIN: 32 → Hypothetical signal: 20log(50 mV / 1.2 V / 32) = 2.5 dBFS

(10) The crosstalk (XT) is specified as the tone level of the signal applied to the crosstalk source seen in the spectrum of the converter under test. It is measured with the inputs of the converter under test being grounded.

Table 5-39 lists the AC performance characteristics of the SD24_B.

Table 5-39. SD24_B AC Performance

f_{SD24} = 1 MHz, SD24OSRx = 256, SD24REFS = 1

PARAMETER		TEST CONDITIONS		V_{CC}	MIN	TYP	MAX	UNIT
SINAD	Signal-to-noise + distortion ratio	SD24GAIN: 1	f_{IN} = 50 Hz (1)	3 V	85	87		dB
		SD24GAIN: 2		3 V		86		
		SD24GAIN: 4		3 V		85		
		SD24GAIN: 8		3 V	82	84		
		SD24GAIN: 16		3 V		80		
		SD24GAIN: 32		3 V	73	74		
		SD24GAIN: 64		3 V		68		
		SD24GAIN: 128		3 V		62		
THD	Total harmonic distortion	SD24GAIN: 1	f_{IN} = 50 Hz (1)	3 V		100		dB
		SD24GAIN: 8		3 V		90		
		SD24GAIN: 32		3 V		80		

(1) The following voltages were applied to the SD24_B inputs:
$V_{I,A+}(t) = 0\ V + V_{PP} / 2 \times \sin(2\pi \times f_{IN} \times t)$
$V_{I,A-}(t) = 0\ V - V_{PP} / 2 \times \sin(2\pi \times f_{IN} \times t)$
resulting in a differential voltage of $V_{ID} = V_{I,A+}(t) - V_{I,A-}(t) = V_{PP} \times \sin(2\pi \times f_{IN} \times t)$ with V_{PP} being selected as the maximum value allowed for a given range (according to SD24_B recommended operating conditions).

Table 5-40 lists the AC performance characteristics of the SD24_B.

Table 5-40. SD24_B AC Performance

f_{SD24} = 2 MHz, SD24OSRx = 512, SD24REFS = 1

PARAMETER		TEST CONDITIONS		V_{CC}	MIN	TYP	MAX	UNIT
SINAD	Signal-to-noise + distortion ratio	SD24GAIN: 1	f_{IN} = 50 Hz (1)	3 V		87		dB
		SD24GAIN: 2		3 V		86		
		SD24GAIN: 4		3 V		85		
		SD24GAIN: 8		3 V		84		
		SD24GAIN: 16		3 V		81		
		SD24GAIN: 32		3 V		76		
		SD24GAIN: 64		3 V		71		
		SD24GAIN: 128		3 V		65		

(1) The following voltages were applied to the SD24_B inputs:
$V_{I,A+}(t) = 0\ V + V_{PP} / 2 \times \sin(2\pi \times f_{IN} \times t)$
$V_{I,A-}(t) = 0\ V - V_{PP} / 2 \times \sin(2\pi \times f_{IN} \times t)$
resulting in a differential voltage of $V_{ID} = V_{I,A+}(t) - V_{I,A-}(t) = V_{PP} \times \sin(2\pi \times f_{IN} \times t)$ with V_{PP} being selected as the maximum value allowed for a given range (according to SD24_B recommended operating conditions).

Copyright © 2011–2018, Texas Instruments Incorporated

Table 5-41 lists the AC performance characteristics of the SD24_B.

Table 5-41. SD24_B AC Performance

f_{SD24} = 32 kHz, SD24OSRx = 512, SD24REFS = 1

PARAMETER		TEST CONDITIONS		V_{CC}	MIN	TYP	MAX	UNIT
SINAD	Signal-to-noise + distortion ratio	SD24GAIN: 1	f_{IN} = 12 Hz (1)	3 V		89		dB
		SD24GAIN: 2		3 V		85		
		SD24GAIN: 4		3 V		84		
		SD24GAIN: 8		3 V		86		
		SD24GAIN: 16		3 V		80		
		SD24GAIN: 32		3 V		76		
		SD24GAIN: 64		3 V		67		
		SD24GAIN: 128		3 V		61		

(1) The following voltages were applied to the SD24_B inputs:
$V_{I,A+}(t) = 0\ V + V_{PP} / 2 \times \sin(2\pi \times f_{IN} \times t)$
$V_{I,A-}(t) = 0\ V - V_{PP} / 2 \times \sin(2\pi \times f_{IN} \times t)$
resulting in a differential voltage of $V_{ID} = V_{I,A+}(t) - V_{I,A-}(t) = V_{PP} \times \sin(2\pi \times f_{IN} \times t)$ with V_{PP} being selected as the maximum value allowed for a given range (according to SD24_B recommended operating conditions).

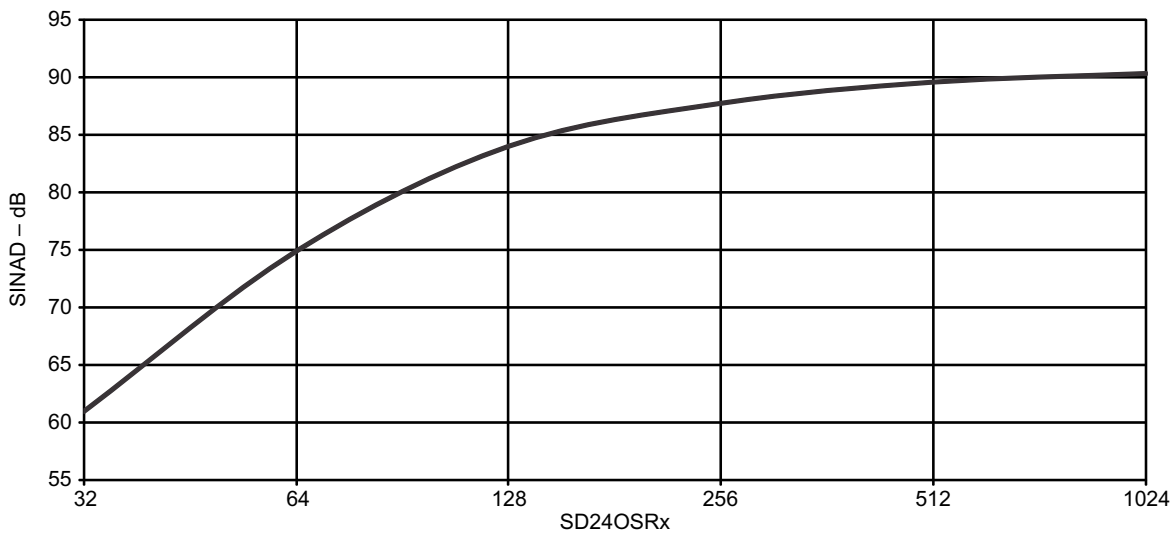

Figure 5-19. SINAD vs OSR
(f_{SD24} = 1 MHz, SD24REFS = 1, SD24GAIN = 1)

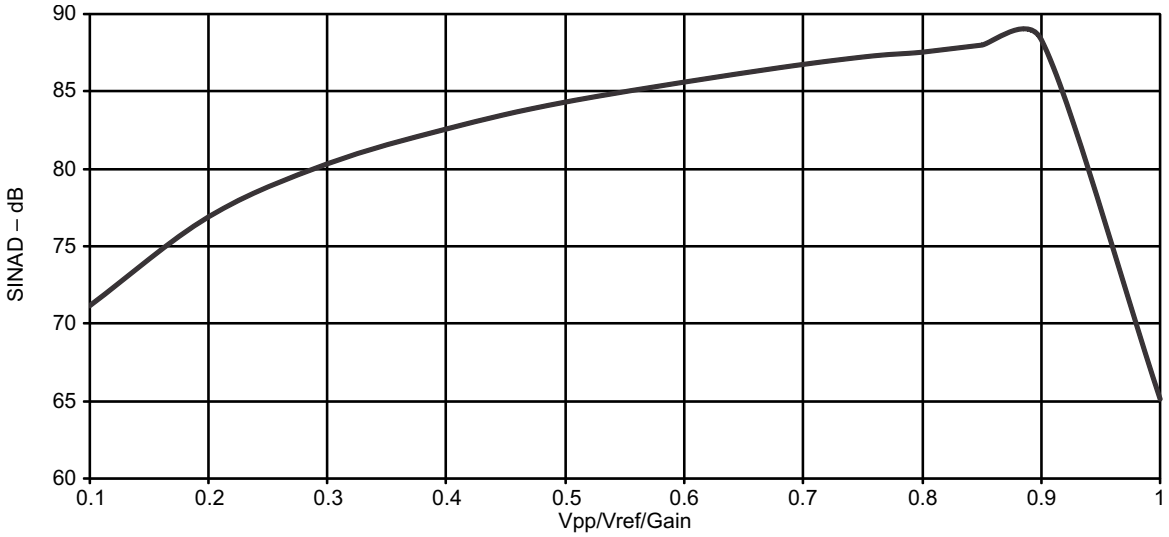

Figure 5-20. SINAD vs V_{PP}

Table 5-42 lists the external reference input requirements of the SD24_B.

Table 5-42. SD24_B External Reference Input

ensure correct input voltage range according to V_{REF}

PARAMETER		TEST CONDITIONS	V_{CC}	MIN	TYP	MAX	UNIT
$V_{REF(I)}$	Input voltage	SD24REFS = 0	3 V	1.0	1.20	1.5	V
$I_{REF(I)}$	Input current	SD24REFS = 0	3 V			50	nA

Copyright © 2011–2018, Texas Instruments Incorporated

5.16 ADC10_A

Table 5-43 lists the power supply and input range conditions of the ADC10_A.

Table 5-43. 10-Bit ADC, Power Supply and Input Range Conditions

over recommended ranges of supply voltage and operating free-air temperature (unless otherwise noted)

			V_{CC}	MIN	TYP	MAX	UNIT
AV_{CC}	Analog supply voltage	AV_{CC} and DV_{CC} are connected together, AV_{SS} and DV_{SS} are connected together, $V_{(AVSS)} = V_{(DVSS)} = 0$ V		1.8		3.6	V
$V_{(Ax)}$	Analog input voltage range (1)	All ADC10_A pins		0		AV_{CC}	V
I_{ADC10_A}	Operating supply current into AVCC terminal, REF module and reference buffer off	$f_{ADC10CLK}$ = 5 MHz, ADC10ON =1, REFON = 0, SHT0 = 0, SHT1 = 0, ADC10DIV = 0, ADC10SREF = 00	2.2 V		70	105	µA
			3 V		80	115	
	Operating supply current into AVCC terminal, REF module on, reference buffer on	$f_{ADC10CLK}$ = 5 MHz, ADC10ON = 1, REFON = 1, SHT0 = 0, SHT1 = 0, ADC10DIV = 0, ADC10SREF = 01	3 V		130	185	
	Operating supply current into AVCC terminal, REF module off, reference buffer on	$f_{ADC10CLK}$ = 5 MHz, ADC10ON = 1, REFON = 0, SHT0 = 0, SHT1 = 0, ADC10DIV = 0, ADC10SREF = 10, VEREF = 2.5 V	3 V		108	160	
	Operating supply current into AVCC terminal, REF module off, reference buffer off	$f_{ADC10CLK}$ = 5 MHz, ADC10ON = 1, REFON = 0, SHT0 = 0, SHT1 = 0, ADC10DIV = 0, ADC10SREF = 11, VEREF = 2.5 V	3 V		74	105	
C_I	Input capacitance	Only one terminal Ax can be selected at one time from the pad to the ADC10_A capacitor array including wiring and pad.	2.2 V		3.5		pF
R_I	Input MUX ON resistance	AV_{CC} > 2 V, 0 V ≤ V_{Ax} ≤ AV_{CC}				36	kΩ
		1.8 V < AV_{CC} < 2 V, 0 V ≤ V_{Ax} ≤ AV_{CC}				96	

(1) The analog input voltage range must be within the selected reference voltage range V_{R+} to V_{R-} for valid conversion results. The external reference voltage requires decoupling capacitors. Two decoupling capacitors, 10 µF and 100 nF, should be connected to VREF to decouple the dynamic current required for an external reference source if it is used for the ADC10_A. Also see the *MSP430x5xx and MSP430x6xx Family User's Guide*.

Table 5-44 lists the timing parameters of the ADC10_A.

Table 5-44. 10-Bit ADC, Timing Parameters

over recommended ranges of supply voltage and operating free-air temperature (unless otherwise noted)

PARAMETER		TEST CONDITIONS	V_{CC}	MIN	TYP	MAX	UNIT
$f_{ADC10CLK}$		For specified performance of ADC10_A linearity parameters	2.2 V, 3 V	0.45	5	5.5	MHz
$f_{ADC10OSC}$	Internal ADC10_A oscillator (1)	ADC10DIV = 0, $f_{ADC10CLK}$ = $f_{ADC10OSC}$	2.2 V, 3 V	4.4	5.0	5.6	MHz
$t_{CONVERT}$	Conversion time	REFON = 0, Internal oscillator, 12 ADC10CLK cycles, 10-bit mode $f_{ADC10OSC}$ = 4 MHz to 5 MHz	2.2 V, 3 V	2.4		3.0	µs
		External $f_{ADC10CLK}$ from ACLK, MCLK or SMCLK, ADC10SSEL ≠ 0			12 × 1 / $f_{ADC10CLK}$		
$t_{ADC10ON}$	Turnon settling time of the ADC	See (2)				100	ns
t_{Sample}	Sampling time	R_S = 1000 Ω, R_I = 96 kΩ, C_I = 3.5 pF (3)	1.8 V	3			µs
		R_S = 1000 Ω, R_I = 36 kΩ, C_I = 3.5 pF (3)	3 V	1			

(1) The ADC10OSC is sourced directly from MODOSC inside the UCS.
(2) The condition is that the error in a conversion started after $t_{ADC10ON}$ is less than ±0.5 LSB. The reference and input signal are already settled.
(3) Approximately ei8ght Tau (t) are needed to get an error of less than ±0.5 LSB

Table 5-45. 10-Bit ADC, Linearity Parameters

over recommended ranges of supply voltage and operating free-air temperature (unless otherwise noted)

PARAMETER		TEST CONDITIONS	V_{CC}	MIN	TYP	MAX	UNIT
E_I	Integral linearity error	$1.4\ V \le (V_{eREF+} - V_{eREF-}) \le 1.6\ V$, $C_{VeREF+} = 20\ pF$	2.2 V, 3 V			±1.0	LSB
		$1.6\ V < (V_{eREF+} - V_{eREF-}) \le V_{AVCC}$, $C_{VeREF+} = 20\ pF$				±1.0	
E_D	Differential linearity error	$1.4\ V \le (V_{eREF+} - V_{eREF-})$, $C_{VeREF+} = 20\ pF$	2.2 V, 3 V			±1.0	LSB
E_O	Offset error	$1.4\ V \le (V_{eREF+} - V_{eREF-})$, $C_{VREF+} = 20\ pF$, Internal impedance of source $R_S < 100\ \Omega$	2.2 V, 3 V			±1.0	LSB
E_G	Gain error	$1.4\ V \le (V_{eREF+} - V_{eREF-})$, $C_{VeREF+} = 20\ pF$, ADC10SREFx = 11b	2.2 V, 3 V			±1.0	LSB
E_T	Total unadjusted error	$1.4\ V \le (V_{eREF+} - V_{eREF-})$, $C_{VeREF+} = 20\ pF$, ADC10SREFx = 11b	2.2 V, 3 V		±1.0	±2.0	LSB

Table 5-46 lists the external reference requirements of the ADC10_A.

Table 5-46. 10-Bit ADC, External Reference

over recommended ranges of supply voltage and operating free-air temperature (unless otherwise noted)(1)

PARAMETER		TEST CONDITIONS	V_{CC}	MIN	TYP	MAX	UNIT
V_{eREF+}	Positive external reference voltage input	$V_{eREF+} > V_{eREF-}$ (2)		1.4		AV_{CC}	V
V_{eREF-}	Negative external reference voltage input	$V_{eREF+} > V_{eREF-}$ (3)		0		1.2	V
$(V_{eREF+} - V_{eREF-})$	Differential external reference voltage input	$V_{eREF+} > V_{eREF-}$ (4)		1.4		AV_{CC}	V
I_{VeREF+}, I_{VeREF-}	Static input current	$1.4\ V \le V_{eREF+} \le V_{AVCC}$, $V_{eREF-} = 0\ V$, $f_{ADC10CLK} = 5\ MHz$, ADC10SHTx = 0x0001, Conversion rate 200 ksps	2.2 V, 3 V		±8.5	±26	µA
		$1.4\ V \le V_{eREF+} \le V_{AVCC}$, $V_{eREF-} = 0\ V$, $f_{ADC10CLK} = 5\ MHz$, ADC10SHTX = 0x1000, Conversion rate 20 ksps	2.2 V, 3 V			±1	µA
$C_{VeREF+/-}$	Capacitance at VeREF+ or VeREF- terminal	See (5)		10			µF

(1) The external reference is used during ADC conversion to charge and discharge the capacitance array. The input capacitance, C_I, is also the dynamic load for an external reference during conversion. The dynamic impedance of the reference supply should follow the recommendations on analog-source impedance to allow the charge to settle for 10-bit accuracy.
(2) The accuracy limits the minimum positive external reference voltage. Lower reference voltage levels may be applied with reduced accuracy requirements.
(3) The accuracy limits the maximum negative external reference voltage. Higher reference voltage levels may be applied with reduced accuracy requirements.
(4) The accuracy limits minimum external differential reference voltage. Lower differential reference voltage levels may be applied with reduced accuracy requirements.
(5) Two decoupling capacitors, 10 µF and 100 nF, should be connected to VeREF to decouple the dynamic current required for an external reference source if it is used for the ADC10_A. Also see the *MSP430x5xx and MSP430x6xx Family User's Guide*.

Copyright © 2011–2018, Texas Instruments Incorporated

5.17 REF

Table 5-47 lists the characteristics of the REF.

Table 5-47. REF, Built-In Reference

over recommended ranges of supply voltage and operating free-air temperature (unless otherwise noted)

PARAMETER		TEST CONDITIONS	V_{CC}	MIN	TYP	MAX	UNIT
V_{REF+}	Positive built-in reference voltage	REFVSEL = {2} for 2.5 V, REFON = 1	3 V	2.47	2.51	2.55	V
		REFVSEL = {1} for 2.0 V, REFON = 1	3 V	1.95	1.99	2.03	
		REFVSEL = {0} for 1.5 V, REFON = 1	2.2 V, 3 V	1.46	1.50	1.54	
$AV_{CC(min)}$	AVCC minimum voltage, Positive built-in reference active	REFVSEL = {0} for 1.5 V		1.8			V
		REFVSEL = {1} for 2.0 V		2.2			
		REFVSEL = {2} for 2.5 V		2.7			
I_{REF+}	Operating supply current into AVCC terminal (1)	$f_{ADC10CLK}$ = 5 MHz, REFON = 1, REFBURST = 0, REFVSEL = {2} for 2.5 V	3 V		23	30	µA
		$f_{ADC10CLK}$ = 5 MHz, REFON = 1, REFBURST = 0, REFVSEL = {1} for 2.0 V	3 V		21	27	
		$f_{ADC10CLK}$ = 5 MHz, REFON = 1, REFBURST = 0, REFVSEL = {0} for 1.5 V	3 V		19	25	
TC_{REF+}	Temperature coefficient of built-in reference (2)	REFVSEL = {0, 1, 2}, REFON = 1			10	50	ppm/°C
I_{SENSOR}	Operating supply current into AVCC terminal	REFON = 1, ADC10ON = 1, INCH = 0Ah, T_A = 30°C	2.2 V		145	220	µA
			3 V		170	245	
V_{SENSOR}	See (3)	REFON = 1, ADC10ON = 1, INCH = 0Ah, T_A = 30°C	2.2 V		780		mV
			3 V		780		
V_{MID}	AV_{CC} divider at channel 11	ADC10ON = 1, INCH = 0Bh, V_{MID} is ~0.5 × V_{AVCC}	2.2 V	1.08	1.1	1.12	V
			3 V	1.48	1.5	1.52	
$t_{SENSOR(sample)}$	Sample time required if channel 10 is selected (4)	REFON = 1, ADC10ON = 1, INCH = 0Ah, Error of conversion result ≤ 1 LSB		30			µs
$t_{VMID(sample)}$	Sample time required if channel 11 is selected (5)	ADC10ON = 1, INCH = 0Bh, Error of conversion result ≤ 1 LSB		1			µs
PSRR_DC	Power supply rejection ratio (DC)	AV_{CC} = $AV_{CC\ (min)}$ to $AV_{CC(max)}$, T_A = 25°C, REFVSEL = {0, 1, 2}, REFON = 1			120	300	µV/V
PSRR_AC	Power supply rejection ratio (AC)	AV_{CC} = $AV_{CC\ (min)}$ to $AV_{CC(max)}$, T_A = 25°C, f = 1 kHz, ΔVpp = 100 mV REFVSEL = {0, 1, 2}, REFON = 1			1		mV/V
t_{SETTLE}	Settling time of reference voltage (6)	AV_{CC} = $AV_{CC\ (min)}$ to $AV_{CC(max)}$, REFVSEL = {0, 1, 2}, REFON = 0→1			75		µs
$V_{SD24REF}$	SD24_B internal reference voltage	SD24REFS = 1	3 V	1.137	1.151	1.165	V
t_{ON}	SD24_B internal reference turnon time (7)	SD24REFS = 0→1, C_{REF} = 100 nF	3 V		200		µs

(1) The internal reference current is supplied through the AVCC terminal. Consumption is independent of the ADC10ON control bit, unless a conversion is active. The REFON bit enables to settle the built-in reference before starting an A/D conversion.
(2) Calculated using the box method: (MAX(–40°C to 85°C) – MIN(–40°C to 85°C)) / MIN(–40°C to 85°C)/(85°C – (–40°C)).
(3) The temperature sensor offset can be significant. TI recommends a single-point calibration to minimize the offset error of the built-in temperature sensor.
(4) The typical equivalent impedance of the sensor is 51 kΩ. The sample time required includes the sensor-on time $t_{SENSOR(on)}$.
(5) The on-time $t_{VMID(on)}$ is included in the sampling time $t_{VMID(sample)}$; no additional on time is needed.
(6) The condition is that the error in a conversion started after t_{REFON} is ≤ 1 LSB.
(7) The condition is that SD24_B conversion started after t_{ON} should guarantee specified SINAD values for the selected Gain, OSR and f_{SD24}.

5.18 Flash Memory

Table 5-48 lists the characteristics of the flash memory.

Table 5-48. Flash Memory

over recommended ranges of supply voltage and operating free-air temperature (unless otherwise noted)

PARAMETER		T_J	MIN	TYP	MAX	UNIT
$DV_{CC(PGM/ERASE)}$	Program and erase supply voltage		1.8		3.6	V
I_{PGM}	Average supply current from DVCC during program			3	5	mA
I_{ERASE}	Average supply current from DVCC during erase			6	11	mA
I_{MERASE}, I_{BANK}	Average supply current from DVCC during mass erase or bank erase			6	11	mA
t_{CPT}	Cumulative program time (1)				16	ms
	Program and erase endurance		10^4	10^5		cycles
$t_{Retention}$	Data retention duration	25°C	100			years
t_{Word}	Word or byte program time (2)		64		85	µs
$t_{Block, 0}$	Block program time for first byte or word (2)		49		65	µs
$t_{Block, 1–(N–1)}$	Block program time for each additional byte or word, except for last byte or word (2)		37		49	µs
$t_{Block, N}$	Block program time for last byte or word (2)		55		73	µs
t_{Erase}	Erase time for segment erase, mass erase, and bank erase when available (2)		23		32	ms
$f_{MCLK,MGR}$	MCLK frequency in marginal read mode (FCTL4.MGR0 = 1 or FCTL4. MGR1 = 1)		0		1	MHz

(1) The cumulative program time must not be exceeded when writing to a 128-byte flash block. This parameter applies to all programming methods: individual word- or byte-write and block-write modes.
(2) These values are hardwired into the state machine of the flash controller.

5.19 Emulation and Debug

Table 5-49 lists the characteristics of the JTAG and Spy-Bi-Wire interface.

Table 5-49. JTAG and Spy-Bi-Wire Interface

over recommended ranges of supply voltage and operating free-air temperature (unless otherwise noted)

PARAMETER		V_{CC}	MIN	TYP	MAX	UNIT
f_{SBW}	Spy-Bi-Wire input frequency	2.2 V, 3 V	0		20	MHz
$t_{SBW,Low}$	Spy-Bi-Wire low clock pulse duration	2.2 V, 3 V	0.025		15	µs
$t_{SBW, En}$	Spy-Bi-Wire enable time (TEST high to acceptance of first clock edge) (1)	2.2 V, 3 V			1	µs
$t_{SBW,Rst}$	Spy-Bi-Wire return to normal operation time		15		100	µs
f_{TCK}	TCK input frequency for 4-wire JTAG (2)	2.2 V	0		5	MHz
		3 V	0		10	
$R_{internal}$	Internal pulldown resistance on TEST	2.2 V, 3 V	45	60	80	kΩ

(1) Tools that access the Spy-Bi-Wire interface must wait for the minimum $t_{SBW,En}$ time after pulling the TEST/SBWTCK pin high before applying the first SBWTCK clock edge.
(2) f_{TCK} may be restricted to meet the timing requirements of the module selected.

Copyright © 2011–2018, Texas Instruments Incorporated

6 Detailed Description

6.1 CPU

The MSP430 CPU has a 16-bit RISC architecture that is highly transparent to the application. All operations, other than program-flow instructions, are performed as register operations in conjunction with seven addressing modes for source operand and four addressing modes for destination operand.

The CPU is integrated with 16 registers that provide reduced instruction execution time. The register-to-register operation execution time is one cycle of the CPU clock. Four of the registers, R0 to R3, are dedicated as program counter, stack pointer, status register, and constant generator, respectively. The remaining registers are general-purpose registers (see Figure 6-1).

Peripherals are connected to the CPU using data, address, and control buses. Peripherals can be managed with all instructions.

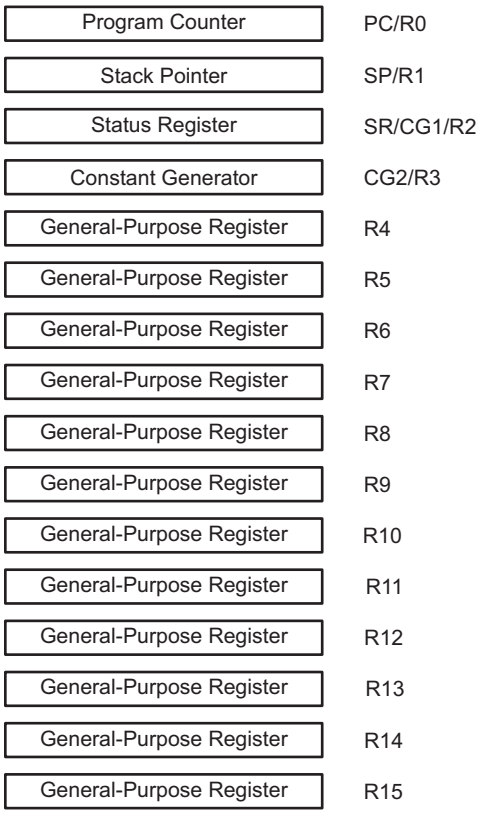

Figure 6-1. Integrated CPU Registers

6.2 Instruction Set

The instruction set consists of the original 51 instructions with three formats and seven address modes and additional instructions for the expanded address range. Each instruction can operate on word and byte data. Table 6-1 lists examples of the three types of instruction formats. Table 6-2 lists the address modes.

Table 6-1. Instruction Word Formats

INSTRUCTION WORD FORMAT	EXAMPLE	OPERATION
Dual operands, source and destination	ADD R4,R5	R4 + R5 → R5
Single operands, destination only	CALL R8	PC → (TOS), R8 → PC
Relative jump, unconditional or conditional	JNE	Jump-on-equal bit = 0

Table 6-2. Address Mode Descriptions

ADDRESS MODE	S(1)	D(1)	SYNTAX	EXAMPLE	OPERATION
Register	+	+	MOV Rs,Rd	MOV R10,R11	R10 → R11
Indexed	+	+	MOV X(Rn),Y(Rm)	MOV 2(R5),6(R6)	M(2+R5) → M(6+R6)
Symbolic (PC relative)	+	+	MOV EDE,TONI		M(EDE) → M(TONI)
Absolute	+	+	MOV & MEM, & TCDAT		M(MEM) → M(TCDAT)
Indirect	+		MOV @Rn,Y(Rm)	MOV @R10,Tab(R6)	M(R10) → M(Tab+R6)
Indirect autoincrement	+		MOV @Rn+,Rm	MOV @R10+,R11	M(R10) → R11 R10 + 2 → R10
Immediate	+		MOV #X,TONI	MOV #45,TONI	#45 → M(TONI)

(1) S = source, D = destination

Copyright © 2011–2018, Texas Instruments Incorporated

6.3 Operating Modes

These microcontrollers have one active mode and seven software-selectable low-power modes of operation. An interrupt event can wake up the device from any of the low-power modes, service the request, and restore back to the low-power mode on return from the interrupt program.

Software can configure the following operating modes:

- Active mode (AM)
  - All clocks are active
- Low-power mode 0 (LPM0)
  - CPU is disabled
  - ACLK and SMCLK remain active, MCLK is disabled
  - FLL loop control remains active
- Low-power mode 1 (LPM1)
  - CPU is disabled
  - FLL loop control is disabled
  - ACLK and SMCLK remain active, MCLK is disabled
- Low-power mode 2 (LPM2)
  - CPU is disabled
  - MCLK and FLL loop control and DCOCLK are disabled
  - DC generator of the DCO remains enabled
  - ACLK remains active
- Low-power mode 3 (LPM3)
  - CPU is disabled
  - MCLK, FLL loop control, and DCOCLK are disabled
  - DC generator of the DCO is disabled
  - ACLK remains active
- Low-power mode 4 (LPM4)
  - CPU is disabled
  - ACLK is disabled
  - MCLK, FLL loop control, and DCOCLK are disabled
  - DC generator of the DCO is disabled
  - Crystal oscillator is stopped
  - Complete data retention
- Low-power mode 3.5 (LPM3.5)
  - Internal regulator disabled
  - No RAM retention, Backup RAM retained
  - I/O pad state retention
  - RTC clocked by low-frequency oscillator
  - Wake-up input from $\overline{\text{RST}}$/NMI, RTC_C events, Ports P1 and P2
- Low-power mode 4.5 (LPM4.5)
  - Internal regulator disabled
  - No RAM retention, Backup RAM retained
  - RTC is disabled
  - I/O pad state retention
  - Wake-up input from $\overline{\text{RST}}$/NMI, Ports P1 and P2

6.4 Interrupt Vector Addresses

The interrupt vectors and the power-up start address are in the address range 0FFFFh to 0FF80h (see Table 6-3). The vector contains the 16-bit address of the appropriate interrupt-handler instruction sequence.

Table 6-3. Interrupt Sources, Flags, and Vectors of MSP430F67xx Configurations

INTERRUPT SOURCE	INTERRUPT FLAG	SYSTEM INTERRUPT	WORD ADDRESS	PRIORITY
System Reset Power up External reset Watchdog time-out, key violation Flash memory key violation	WDTIFG, KEYV (SYSRSTIV)(1)(2)	Reset	0FFFEh	63, highest
System NMI PMM Vacant memory access JTAG mailbox	SVMLIFG, SVMHIFG, DLYLIFG, DLYHIFG, VLRLIFG, VLRHIFG, VMAIFG, JMBNIFG, JMBOUTIFG (SYSSNIV) (1)(3)	(Non)maskable	0FFFCh	62
User NMI NMI Oscillator fault Flash memory access violation Supply switch	NMIIFG, OFIFG, ACCVIFG, AUXSWNMIFG (SYSUNIV)(1)(3)	(Non)maskable	0FFFAh	61
Watchdog Timer_A interval timer mode	WDTIFG	Maskable	0FFF8h	60
eUSCI_A0 receive or transmit	UCA0RXIFG, UCA0TXIFG (UCA0IV)(1)(4)	Maskable	0FFF6h	59
eUSCI_B0 receive or transmit	UCB0RXIFG, UCB0TXIFG (UCB0IV)(1)(4)	Maskable	0FFF4h	58
ADC10_A	ADC10IFG0, ADC10INIFG, ADC10LOIFG, ADC10HIIFG, ADC10TOVIFG, ADC10OVIFG (ADC10IV)(1)(4)	Maskable	0FFF2h	57
SD24_B	SD24_B Interrupt Flags (SD24IV)(1)(4)	Maskable	0FFF0h	56
Timer TA0	TA0CCR0 CCIFG0(4)	Maskable	0FFEEh	55
Timer TA0	TA0CCR1 CCIFG1, TA0CCR2 CCIFG2, TA0IFG (TA0IV)(1)(4)	Maskable	0FFECh	54
eUSCI_A1 receive or transmit	UCA1RXIFG, UCA1TXIFG (UCA1IV)(1)(4)	Maskable	0FFEAh	53
eUSCI_A2 receive or transmit	UCA2RXIFG, UCA2TXIFG (UCA2IV)(1)(4)	Maskable	0FFE8h	52
Auxiliary supplies	Auxiliary Supplies Interrupt Flags (AUXIV)(1)(4)	Maskable	0FFE6h	51
DMA	DMA0IFG, DMA1IFG, DMA2IFG (DMAIV)(1)(4)	Maskable	0FFE4h	50
Timer TA1	TA1CCR0 CCIFG0(4)	Maskable	0FFE2h	49
Timer TA1	TA1CCR1 CCIFG1, TA1IFG (TA1IV)(1)(4)	Maskable	0FFE0h	48
I/O port P1	P1IFG.0 to P1IFG.7 (P1IV)(1)(4)	Maskable	0FFDEh	47
Timer TA2	TA2CCR0 CCIFG0(4)	Maskable	0FFDCh	46
Timer TA2	TA2CCR1 CCIFG1, TA2IFG (TA2IV)(1)(4)	Maskable	0FFDAh	45
I/O port P2	P2IFG.0 to P2IFG.7 (P2IV)(1)(4)	Maskable	0FFD8h	44
Timer TA3	TA3CCR0 CCIFG0(4)	Maskable	0FFD6h	43
Timer TA3	TA3CCR1 CCIFG1, TA3IFG (TA3IV)(1)(4)	Maskable	0FFD4h	42
LCD_C	LCD_C Interrupt Flags (LCDCIV)(1)(4)	Maskable	0FFD2h	41
RTC_C	RTCOFIFG, RTCRDYIFG, RTCTEVIFG, RTCAIFG, RT0PSIFG, RT1PSIFG (RTCIV)(1)(4)	Maskable	0FFD0h	40

(1) Multiple source flags
(2) A reset is generated if the CPU tries to fetch instructions from within peripheral space or vacant memory space.
(3) (Non)maskable: the individual interrupt enable bit can disable an interrupt event, but the general interrupt enable bit cannot disable it.
(4) Interrupt flags are in the module.

Copyright © 2011–2018, Texas Instruments Incorporated

Table 6-3. Interrupt Sources, Flags, and Vectors of MSP430F67xx Configurations (continued)

INTERRUPT SOURCE	INTERRUPT FLAG	SYSTEM INTERRUPT	WORD ADDRESS	PRIORITY
Reserved	Reserved(5)		0FFCEh	39
			⋮	⋮
			0FF80h	0, lowest

(5) Reserved interrupt vectors at addresses are not used in this device and can be used for regular program code if necessary. To maintain compatibility with other devices, TI recommends reserving these locations.

6.5 Memory Organization

Table 6-4 and Table 6-5 summarize the memory map for the devices.

Table 6-4. Memory Organization

		MSP430F6730 MSP430F6720	MSP430F6731 MSP430F6721	MSP430F6733 MSP430F6723
Main Memory (flash)	Total Size	16KB	32KB	64KB
Main: Interrupt vector		00FFFFh to 00FF80h	00FFFFh to 00FF80h	00FFFFh to 00FF80h
Main: code memory	Bank 3	not available	not available	not available
	Bank 2	not available	not available	not available
	Bank 1	not available	16KB 00FFFFh to 00C000h	32KB 013FFFh to 00C000h
	Bank 0	16KB 00FFFFh to 00C000h	16KB 00BFFFh to 008000h	32KB 00BFFFh to 004000h
RAM	Total Size	1KB	2KB	4KB
	Sector 3	not available	not available	not available
	Sector 2	not available	not available	not available
	Sector 1	not available	not available	2KB 002BFFh to 002400h
	Sector 0	1KB 001FFFh to 001C00h	2KB 0023FFh to 001C00h	2KB 0023FFh to 001C00h
Information memory (flash)	Info A	128 B 0019FFh to 001980h	128 B 0019FFh to 001980h	128 B 0019FFh to 001980h
	Info B	128 B 00197Fh to 001900h	128 B 00197Fh to 001900h	128 B 00197Fh to 001900h
	Info C	128 B 0018FFh to 001880h	128 B 0018FFh to 001880h	128 B 0018FFh to 001880h
	Info D	128 B 00187Fh to 001800h	128 B 00187Fh to 001800h	128 B 00187Fh to 001800h
Bootloader (BSL) memory (flash)	BSL 3	512 B 0017FFh to 001600h	512 B 0017FFh to 001600h	512 B 0017FFh to 001600h
	BSL 2	512 B 0015FFh to 001400h	512 B 0015FFh to 001400h	512 B 0015FFh to 001400h
	BSL 1	512 B 0013FFh to 001200h	512 B 0013FFh to 001200h	512 B 0013FFh to 001200h
	BSL 0	512 B 0011FFh to 001000h	512 B 0011FFh to 001000h	512 B 0011FFh to 001000h
Peripherals		4KB 000FFFh to 0h	4KB 000FFFh to 0h	4KB 000FFFh to 0h

Table 6-5. Memory Organization

		MSP430F6734 MSP430F6724	MSP430F6735 MSP430F6725	MSP430F6736 MSP430F6726
Main Memory (flash)	Total Size	96KB	128KB	128KB
Main: Interrupt vector		00FFFFh to 00FF80h	00FFFFh to 00FF80h	00FFFFh to 00FF80h
Main: code memory	Bank 3	not available	32KB 023FFFh to 01C000h	32KB 023FFFh to 01C000h
	Bank 2	32KB 01BFFFh to 014000h	32KB 01BFFFh to 014000h	32KB 01BFFFh to 014000h
	Bank 1	32KB 013FFFh to 00C000h	32KB 013FFFh to 00C000h	32KB 013FFFh to 00C000h
	Bank 0	32KB 00BFFFh to 004000h	32KB 00BFFFh to 004000h	32KB 00BFFFh to 004000h
RAM	Total Size	4KB	4KB	8KB
	Sector 3	not available	not available	2KB 003BFFh to 003400h
	Sector 2	not available	not available	2KB 0033FFh to 002C00h
	Sector 1	2KB 002BFFh to 002400h	2KB 002BFFh to 002400h	2KB 002BFFh to 002400h
	Sector 0	2KB 0023FFh to 001C00h	2KB 0023FFh to 001C00h	2KB 0023FFh to 001C00h
Information memory (flash)	Info A	128 B 0019FFh to 001980h	128 B 0019FFh to 001980h	128 B 0019FFh to 001980h
	Info B	128 B 00197Fh to 001900h	128 B 00197Fh to 001900h	128 B 00197Fh to 001900h
	Info C	128 B 0018FFh to 001880h	128 B 0018FFh to 001880h	128 B 0018FFh to 001880h
	Info D	128 B 00187Fh to 001800h	128 B 00187Fh to 001800h	128 B 00187Fh to 001800h
Bootloader (BSL) memory (flash)	BSL 3	512 B 0017FFh to 001600h	512 B 0017FFh to 001600h	512 B 0017FFh to 001600h
	BSL 2	512 B 0015FFh to 001400h	512 B 0015FFh to 001400h	512 B 0015FFh to 001400h
	BSL 1	512 B 0013FFh to 001200h	512 B 0013FFh to 001200h	512 B 0013FFh to 001200h
	BSL 0	512 B 0011FFh to 001000h	512 B 0011FFh to 001000h	512 B 0011FFh to 001000h
Peripherals		4KB 000FFFh to 0h	4KB 000FFFh to 0h	4KB 000FFFh to 0h

Copyright © 2011–2018, Texas Instruments Incorporated

6.6 Bootloader (BSL)

The BSL enables users to program the flash memory or RAM using various serial interfaces. Access to the device memory through the BSL is protected by an user-defined password. BSL entry requires a specific entry sequence on the $\overline{\text{RST}}$/NMI/SBWTDIO and TEST/SBWTCK pins. For complete description of the features of the BSL and its implementation, see *MSP430™ Flash Device Bootloader (BSL) User's Guide*. Table 6-6 lists the BSL pin requirements.

Table 6-6. UART BSL Pin Requirements and Functions

DEVICE SIGNAL	BSL FUNCTION
$\overline{\text{RST}}$/NMI/SBWTDIO	Entry sequence signal
TEST/SBWTCK	Entry sequence signal
P3.0	Data transmit
P3.1	Data receive
DVCC	Power supply
DVSS	Ground supply

6.7 JTAG Operation

6.7.1 JTAG Standard Interface

The MSP430 family supports the standard JTAG interface, which requires four signals for sending and receiving data. The JTAG signals are shared with general-purpose I/O. The TEST/SBWTCK pin is used to enable the JTAG signals. In addition to these signals, the $\overline{\text{RST}}$/NMI/SBWTDIO is required to interface with MSP430 development tools and device programmers. Table 6-7 lists the JTAG pin requirements. For further details on interfacing to development tools and device programmers, see the *MSP430 Hardware Tools User's Guide* and *MSP430 Programming With the JTAG Interface*.

Table 6-7. JTAG Pin Requirements and Functions

DEVICE SIGNAL	DIRECTION	FUNCTION
PJ.3/ACLK/TCK	IN	JTAG clock input
PJ.2/ADC10CLK/TMS	IN	JTAG state control
PJ.1/MCLK/TDI/TCLK	IN	JTAG data input and TCLK input
PJ.0/SMCLK/TDO	OUT	JTAG data output
TEST/SBWTCK	IN	Enable JTAG pins
$\overline{\text{RST}}$/NMI/SBWTDIO	IN	External reset
DVCC		Power supply
DVSS		Ground supply

Copyright © 2011–2018, Texas Instruments Incorporated

6.7.2 Spy-Bi-Wire Interface

In addition to the standard JTAG interface, the MSP430 family supports the 2-wire Spy-Bi-Wire interface. Spy-Bi-Wire can be used to interface with MSP430 development tools and device programmers. Table 6-8 lists the Spy-Bi-Wire interface pin requirements. For further details on interfacing to development tools and device programmers, see the *MSP430 Hardware Tools User's Guide* and *MSP430 Programming With the JTAG Interface*.

Table 6-8. Spy-Bi-Wire Pin Requirements and Functions

DEVICE SIGNAL	DIRECTION	FUNCTION
TEST/SBWTCK	IN	Spy-Bi-Wire clock input
$\overline{\text{RST}}$/NMI/SBWTDIO	IN, OUT	Spy-Bi-Wire data input and output
DVCC		Power supply
DVSS		Ground supply

6.8 Flash Memory

The flash memory can be programmed through the JTAG port, Spy-Bi-Wire (SBW), the BSL, or in-system by the CPU. The CPU can perform single-byte, single-word, and long-word writes to the flash memory. Features of the flash memory include:

- Flash memory has n segments of main memory and four segments of information memory (A to D) of 128 bytes each. Each segment in main memory is 512 bytes in size.
- Segments 0 to n may be erased in one step, or each segment may be individually erased.
- Segments A to D can be erased individually, or as a group with segments 0 to n. Segments A to D are also called *information memory*.
- Segment A can be locked separately.

6.9 RAM

The RAM is made up of n sectors. Each sector can be completely powered down to save leakage; however, all data are lost. Features of the RAM include:

- RAM has n sectors of 2KB each.
- Each sector 0 to n can be complete disabled; however, data retention is lost.
- Each sector 0 to n automatically enters low-power retention mode when possible.

6.10 Backup RAM

The backup RAM provides a limited number of bytes of RAM that are retained during LPMx.5. This backup RAM is part of the Backup subsystem in MSP430F67xx that operates on dedicated power supply AUXVCC3. There are 8 bytes of backup RAM available in this device. The backup RAM can be word-wise accessed through the registers BAKMEM0, BAKMEM1, BAKMEM2, and BAKMEM3. The backup RAM registers cannot be accessed by the CPU when the high-side SVS is disabled by the user.

Copyright © 2011–2018, Texas Instruments Incorporated

6.11 Peripherals

Peripherals are connected to the CPU through data, address, and control buses. Peripherals can be managed using all instructions. For complete module descriptions, see the *MSP430x5xx and MSP430x6xx Family User's Guide*.

6.11.1 Oscillator and System Clock

The Unified Clock System (UCS) module includes support for a 32768-Hz watch crystal oscillator, an internal very-low-power low-frequency oscillator (VLO), an internal trimmed low-frequency oscillator (REFO), and an integrated internal digitally controlled oscillator (DCO). The UCS module is designed to meet the requirements of both low system cost and low power consumption. The UCS module features digital frequency-locked loop (FLL) hardware that, in conjunction with a digital modulator, stabilizes the DCO frequency to a programmable multiple of the selected FLL reference frequency. The internal DCO provides a fast turnon clock source and stabilizes in 3 µs (typical). The UCS module provides the following clock signals:

- Auxiliary clock (ACLK), sourced from a 32768-Hz watch crystal, the internal low-frequency oscillator (VLO), or the trimmed low-frequency oscillator (REFO).
- Main clock (MCLK), the system clock used by the CPU. MCLK can be sourced by same sources made available to ACLK.
- Sub-Main clock (SMCLK), the subsystem clock used by the peripheral modules. SMCLK can be sourced by same sources made available to ACLK.
- ACLK/n, the buffered output of ACLK, ACLK/2, ACLK/4, ACLK/8, ACLK/16, ACLK/32.

6.11.2 Power Management Module (PMM)

The PMM includes an integrated voltage regulator that supplies the core voltage to the device and contains programmable output levels to provide for power optimization. The PMM also includes supply voltage supervisor (SVS) and supply voltage monitor (SVM) circuitry, as well as brownout protection. The brownout circuit is implemented to provide the proper internal reset signal to the device during power on and power off. The SVS and SVM circuitry detects if the supply voltage drops below a user-selectable level and supports both supply voltage supervision (the device is automatically reset) and supply voltage monitoring (the device is not automatically reset). SVS and SVM circuitry is available on the primary supply and core supply.

6.11.3 Auxiliary Supply System

The auxiliary supply system provides the possibility to operate the device from auxiliary supplies when the primary supply fails.There are two auxililary supplies AUXVCC1 and AUXVCC2 supported in MSP430F67xx. This module supports automatic and manual switching from primary supply to auxiliary suppllies while maintaining full functionality. It allows threshold based monitoring of primary and auxiliary supplies. The device can be started from primary supply or from AUXVCC1, whichever is higher. The auxiliary supply system enables internal monitoring of voltage levels on the primary and auxiliary supplies using ADC10_A. This module also implements a simple charger for the backup supplies.

6.11.4 Backup Subsystem

The backup subsystem operates on a dedicated power supply, AUXVCC3. This subsystem includes low-frequency oscillator (XT1), RTC module, and backup RAM. The functionality of backup subsystem is retained during LPM3.5. The backup subsystem module registers cannot be accessed by CPU when the high-side SVS is disabled by the user. Keep the high-side SVS enabled (SVSHMD = 1 and SVSMHACE = 0) to turn off the low-frequency oscillator (XT1) in LPM4.

6.11.5 Digital I/O

Up to nine 8-bit I/O ports are implemented. For 100-pin options, Ports P1 to P8 are complete, and P9 is reduced to 4-bit I/O. For 80-pin options, Ports P1 to P6 are complete, and P7, P8, and P9 are completely removed. Port PJ contains four individual I/O pins, common to all devices. All I/O bits are individually programmable.

- Any combination of input, output, and interrupt conditions is possible.
- Pullup or pulldown on all ports is programmable.
- Programmable drive strength on all ports.
- Edge-selectable interrupt and LPM3.5 or LPM4.5 wake-up input are available for all bits of ports P1 and P2.
- Read and write access to port-control registers is supported by all instructions.
- Ports can be accessed byte-wise (P1 through P9) or word-wise in pairs (PA through PE).

6.11.6 Port Mapping Controller

The port mapping controller allows flexible and reconfigurable mapping of digital functions to P1, P2, and P3 (see Table 6-9). Table 6-10 lists the default settings for all pins that support port mapping.

Table 6-9. Port Mapping Mnemonics and Functions

VALUE	PxMAPy MNEMONIC	INPUT PIN FUNCTION	OUTPUT PIN FUNCTION
0	PM_NONE	None	DVSS
1	PM_UCA0RXD	eUSCI_A0 UART RXD (direction controlled by eUSCI – Input)	
	PM_UCA0SOMI	eUSCI_A0 SPI slave out master in (direction controlled by eUSCI)	
2	PM_UCA0TXD	eUSCI_A0 UART TXD (direction controlled by eUSCI – Output)	
	PM_UCA0SIMO	eUSCI_A0 SPI slave in master out (direction controlled by eUSCI)	
3	PM_UCA0CLK	eUSCI_A0 clock input/output (direction controlled by eUSCI)	
4	PM_UCA0STE	eUSCI_A0 SPI slave transmit enable (direction controlled by eUSCI)	
5	PM_UCA1RXD	eUSCI_A1 UART RXD (direction controlled by eUSCI – Input)	
	PM_UCA1SOMI	eUSCI_A1 SPI slave out master in (direction controlled by eUSCI)	
6	PM_UCA1TXD	eUSCI_A1 UART TXD (direction controlled by eUSCI – Output)	
	PM_UCA1SIMO	eUSCI_A1 SPI slave in master out (direction controlled by eUSCI)	
7	PM_UCA1CLK	eUSCI_A1 clock input/output (direction controlled by eUSCI)	
8	PM_UCA1STE	eUSCI_A1 SPI slave transmit enable (direction controlled by eUSCI)	
9	PM_UCA2RXD	eUSCI_A2 UART RXD (direction controlled by eUSCI – Input)	
	PM_UCA2SOMI	eUSCI_A2 SPI slave out master in (direction controlled by eUSCI)	
10	PM_UCA2TXD	eUSCI_A2 UART TXD (direction controlled by eUSCI – Output)	
	PM_ UCA2SIMO	eUSCI_A2 SPI slave in master out (direction controlled by eUSCI)	
11	PM_UCA2CLK	eUSCI_A2 clock input/output (direction controlled by eUSCI)	
12	PM_UCA2STE	eUSCI_A2 SPI slave transmit enable (direction controlled by eUSCI)	
13	PM_UCB0SIMO	eUSCI_B0 SPI slave in master out (direction controlled by eUSCI)	
	PM_UCB0SDA	eUSCI_B0 I2C data (open drain and direction controlled by eUSCI)	
14	PM_UCB0SOMI	eUSCI_B0 SPI slave out master in (direction controlled by eUSCI)	
	PM_UCB0SCL	eUSCI_B0 I2C clock (open drain and direction controlled by eUSCI)	
15	PM_UCB0CLK	eUSCI_B0 clock input/output (direction controlled by eUSCI)	
16	PM_UCB0STE	eUSCI_B0 SPI slave transmit enable (direction controlled by eUSCI)	
17	PM_TA0.0	TA0 CCR0 capture input CCI0A	TA0 CCR0 compare output Out0
18	PM_TA0.1	TA0 CCR1 capture input CCI1A	TA0 CCR1 compare output Out1
19	PM_TA0.2	TA0 CCR2 capture input CCI2A	TA0 CCR2 compare output Out2
20	PM_TA1.0	TA1 CCR0 capture input CCI0A	TA1 CCR0 compare output Out0
21	PM_TA1.1	TA1 CCR1 capture input CCI1A	TA1 CCR1 compare output Out1

Copyright © 2011–2018, Texas Instruments Incorporated

Table 6-9. Port Mapping Mnemonics and Functions (continued)

VALUE	PxMAPy MNEMONIC	INPUT PIN FUNCTION	OUTPUT PIN FUNCTION
22	PM_TA2.0	TA2 CCR0 capture input CCI0A	TA2 CCR0 compare output Out0
23	PM_TA2.1	TA2 CCR1 capture input CCI1A	TA2 CCR1 compare output Out1
24	PM_TA3.0	TA3 CCR0 capture input CCI0A	TA3 CCR0 compare output Out0
25	PM_TA3.1	TA3 CCR1 capture input CCI1A	TA3 CCR1 compare output Out1
26	PM_TACLK	Timer_A clock input to TA0, TA1, TA2, TA3	None
	PM_RTCCLK	None	RTC_C clock output
27	PM_SDCLK	SD24_B bitstream clock input/output (direction controlled by SD24_B)	
28	PM_SD0DIO	SD24_B converter-0 bitstream data input/output (direction controlled by SD24_B)	
29	PM_SD1DIO	SD24_B converter-1 bitstream data input/output (direction controlled by SD24_B)	
30	PM_SD2DIO	SD24_B converter-2 bitstream data input/output (direction controlled by SD24_B)	
31 (0FFh)(1)	PM_ANALOG	Disables the output driver and the input Schmitt-trigger to prevent parasitic cross currents when applying analog signals.	

(1) The value of the PM_ANALOG mnemonic is set to 0FFh. The port mapping registers are only 5 bits wide, and the upper bits are ignored, which results in a read value of 31.

Table 6-10. Default Mapping

PIN NAME		PxMAPy MNEMONIC	INPUT PIN FUNCTION	OUTPUT PIN FUNCTION
PZ	PN			
P1.0/PM_TA0.0/ VeREF-/A2	P1.0/PM_TA0.0/ VeREF-/A2	PM_TA0.0	TA0 CCR0 capture input CCI0A	TA0 CCR0 compare output Out0
P1.1/PM_TA0.1/ VeREF+/A1	P1.1/PM_TA0.1/ VeREF+/A1	PM_TA0.1	TA0 CCR1 capture input CCI1A	TA0 CCR1 compare output Out1
P1.2/PM_UCA0RXD/ PM_UCA0SOMI/A0	P1.2/PM_UCA0RXD/ PM_UCA0SOMI/A0	PM_UCA0RXD, PM_UCA0SOMI	eUSCI_A0 UART RXD (direction controlled by eUSCI – input), eUSCI_A0 SPI slave out master in (direction controlled by eUSCI)	
P1.3/PM_UCA0TXD/ PM_UCA0SIMO/R03	P1.3/PM_UCA0TXD/ PM_UCA0SIMO/R03	PM_UCA0TXD, PM_UCA0SIMO	eUSCI_A0 UART TXD (direction controlled by eUSCI – output), eUSCI_A0 SPI slave in master out (direction controlled by eUSCI)	
P1.4/PM_UCA1RXD/ PM_UCA1SOMI/ LCDREF/R13	P1.4/PM_UCA1RXD/ PM_UCA1SOMI/ LCDREF/R13	PM_UCA1RXD, PM_UCA1SOMI	eUSCI_A1 UART RXD (direction controlled by eUSCI – input), eUSCI_A1 SPI slave out master in (direction controlled by eUSCI)	
P1.5/PM_UCA1TXD/ PM_UCA1SIMO/R23	P1.5/PM_UCA1TXD/ PM_UCA1SIMO/R23	PM_UCA1TXD, PM_UCA1SIMO	eUSCI_A1 UART TXD (direction controlled by eUSCI – output), eUSCI_A1 SPI slave in master out (direction controlled by eUSCI)	
P1.6/PM_UCA0CLK/ COM4	P1.6/PM_UCA0CLK/ COM4	PM_UCA0CLK	eUSCI_A0 clock input/output (direction controlled by eUSCI)	
P1.7/PM_UCB0CLK/ COM5	P1.7/PM_UCB0CLK/ COM5	PM_UCB0CLK	eUSCI_B0 clock input/output (direction controlled by eUSCI)	
P2.0/PM_UCB0SOMI/ PM_UCB0SCL/COM6	P2.0/PM_UCB0SOMI/ PM_UCB0SCL/COM6/S39	PM_UCB0SOMI, PM_UCB0SCL	eUSCI_B0 SPI slave out master in (direction controlled by eUSCI), eUSCI_B0 I^2C clock (open drain and direction controlled by eUSCI)	
P2.1/PM_UCB0SIMO/ PM_UCB0SDA/COM7	P2.1/PM_UCB0SIMO/ PM_UCB0SDA/COM7/S38	PM_UCB0SIMO, PM_UCB0SDA	eUSCI_B0 SPI slave in master out (direction controlled by eUSCI), eUSCI_B0 I^2C data (open drain and direction controlled by eUSCI)	
P2.2/PM_UCA2RXD/ PM_UCA2SOMI	P2.2/PM_UCA2RXD/ PM_UCA2SOMI/S37	PM_UCA2RXD, PM_UCA2SOMI	eUSCI_A2 UART RXD (direction controlled by eUSCI – input), eUSCI_A2 SPI slave out master in (direction controlled by eUSCI)	
P2.3/PM_UCA2TXD/ PM_UCA2SIMO	P2.3/PM_UCA2TXD/ PM_UCA2SIMO/S36	PM_UCA2TXD, PM_UCA2SIMO	eUSCI_A2 UART TXD (direction controlled by eUSCI – output), eUSCI_A2 SPI slave in master out (direction controlled by eUSCI)	
P2.4/PM_UCA1CLK	P2.4/PM_UCA1CLK/S35	PM_UCA1CLK	eUSCI_A1 clock input/output (direction controlled by eUSCI)	

Table 6-10. Default Mapping (continued)

PIN NAME		PxMAPy MNEMONIC	INPUT PIN FUNCTION	OUTPUT PIN FUNCTION
PZ	PN			
P2.5/PM_UCA2CLK	P2.5/PM_UCA2CLK/S34	PM_UCA2CLK	eUSCI_A2 clock input/output (direction controlled by eUSCI)	
P2.6/PM_TA1.0	P2.6/PM_TA1.0/S33	PM_TA1.0	TA1 CCR0 capture input CCI0A	TA1 CCR0 compare output Out0
P2.7/PM_TA1.1	P2.7/PM_TA1.1/S32	PM_TA1.1	TA1 CCR1 capture input CCI1A	TA1 CCR1 compare output Out1
P3.0/PM_TA2.0	P3.0/PM_TA2.0/S31	PM_TA2.0	TA2 CCR0 capture input CCI0A	TA2 CCR0 compare output Out0
P3.1/PM_TA2.1	P3.1/PM_TA2.1/S30	PM_TA2.1	TA2 CCR1 capture input CCI1A	TA2 CCR1 compare output Out1
P3.2/PM_TACLK/ PM_RTCCLK	P3.2/PM_TACLK/ PM_RTCCLK/S29	PM_TACLK, PM_RTCCLK	Timer_A clock input to TA0, TA1, TA2, TA3	RTC_C clock output
P3.3/PM_TA0.2	P3.3/PM_TA0.2/S28	PM_TA0.2	TA0 CCR2 capture input CCI2A	TA0 CCR2 compare output Out2
P3.4/PM_SDCLK/S39	P3.4/PM_SDCLK/S27	PM_SDCLK	SD24_B bitstream clock input/output (direction controlled by SD24_B)	
P3.5/PM_SD0DIO/S38	P3.5/PM_SD0DIO/S26	PM_SD0DIO	SD24_B converter-0 bitstream data input/output (direction controlled by SD24_B)	
P3.6/PM_SD1DIO/S37	P3.6/PM_SD1DIO/S25	PM_SD1DIO	SD24_B converter-1 bitstream data input/output (direction controlled by SD24_B)	
P3.7/PM_SD2DIO/S36	P3.7/PM_SD2DIO/S24	PM_SD2DIO	SD24_B converter-2 bitstream data input/output (direction controlled by SD24_B)	

6.11.7 System Module (SYS)

The SYS module handles many of the system functions within the device. These include power-on reset (POR) and power-up clear (PUC) handling, NMI source selection and management, reset interrupt vector generators, bootloader entry mechanisms, as well as, configuration management (device descriptors). It also includes a data exchange mechanism through JTAG called a JTAG mailbox that can be used in the application. Table 6-11 lists the SYS module interrupt vector registers.

Table 6-11. System Module Interrupt Vector Registers

INTERRUPT VECTOR REGISTER	INTERRUPT EVENT	WORD ADDRESS	OFFSET	PRIORITY
SYSRSTIV, System Reset	No interrupt pending	019Eh	00h	
	Brownout (BOR)		02h	Highest
	RST/NMI (POR)		04h	
	DoBOR (BOR)		06h	
	Wakeup from LPMx.5 (BOR)		08h	
	Security violation (BOR)		0Ah	
	SVSL (POR)		0Ch	
	SVSH (POR)		0Eh	
	SVML_OVP (POR)		10h	
	SVMH_OVP (POR)		12h	
	DoPOR (POR)		14h	
	WDT time-out (PUC)		16h	
	WDT key violation (PUC)		18h	
	KEYV flash key violation (PUC)		1Ah	
	Reserved		1Ch	
	Peripheral area fetch (PUC)		1Eh	
	PMM key violation (PUC)		20h	
	Reserved		22h to 3Eh	Lowest

Copyright © 2011–2018, Texas Instruments Incorporated

Table 6-11. System Module Interrupt Vector Registers (continued)

INTERRUPT VECTOR REGISTER	INTERRUPT EVENT	WORD ADDRESS	OFFSET	PRIORITY
SYSSNIV, System NMI	No interrupt pending	019Ch	00h	
	SVMLIFG		02h	Highest
	SVMHIFG		04h	
	DLYLIFG		06h	
	DLYHIFG		08h	
	VMAIFG		0Ah	
	JMBINIFG		0Ch	
	JMBOUTIFG		0Eh	
	VLRLIFG		10h	
	VLRHIFG		12h	
	Reserved		14h to 1Eh	Lowest
SYSUNIV, User NMI	No interrupt pending	019Ah	00h	
	NMIIFG		02h	Highest
	OFIFG		04h	
	ACCVIFG		06h	
	AUXSWNMIFG		08h	
	Reserved		0Ah to 1Eh	Lowest

6.11.8 Watchdog Timer (WDT_A)

The primary function of the WDT_A module is to perform a controlled system restart after a software problem occurs. If the selected time interval expires, a system reset is generated. If the watchdog function is not needed in an application, the timer can be configured as an interval timer and can generate interrupts at selected time intervals.

6.11.9 DMA Controller

The DMA controller allows movement of data from one memory address to another without CPU intervention. For example, the DMA controller can be used to move data from the ADC10_A conversion memory to RAM. Using the DMA controller can increase the throughput of peripheral modules. The DMA controller reduces system power consumption by allowing the CPU to remain in sleep mode, without having to awaken to move data to or from a peripheral. Table 6-12 lists the triggers that are available to start DMA transfer.

Table 6-12. DMA Trigger Assignments(1)

TRIGGER	CHANNEL		
	0	1	2
0	DMAREQ		
1	TA0CCR0 CCIFG		
2	TA0CCR2 CCIFG		
3	TA1CCR0 CCIFG		
4	Reserved		
5	TA2CCR0 CCIFG		
6	Reserved		
7	TA3CCR0 CCIFG		
8	Reserved		

(1) Reserved DMA triggers may be used by other devices in the family. Reserved DMA triggers do not cause a DMA trigger event when selected.

Table 6-12. DMA Trigger Assignments[1] (continued)

TRIGGER	CHANNEL		
	0	1	2
9	Reserved		
10	Reserved		
11	Reserved		
12	Reserved		
13	SD24IFG		
14	Reserved		
15	Reserved		
16	UCA0RXIFG		
17	UCA0TXIFG		
18	UCA1RXIFG		
19	UCA1TXIFG		
20	UCA2RXIFG		
21	UCA2TXIFG		
22	UCB0RXIFG0		
23	UCB0TXIFG0		
24	ADC10IFG0		
25	Reserved		
26	Reserved		
27	Reserved		
28	Reserved		
29	MPY ready		
30	DMA2IFG	DMA0IFG	DMA1IFG
31	Reserved		

6.11.10 CRC16

The CRC16 module produces a signature based on a sequence of entered data values and can be used for data checking purposes. The CRC16 module signature is based on the CRC-CCITT standard.

6.11.11 Hardware Multiplier

The multiplication operation is supported by a dedicated peripheral module. The module performs operations with 32-, 24-, 16-, and 8-bit operands. The module supports signed and unsigned multiplication as well as signed and unsigned multiply-and-accumulate operations.

6.11.12 Enhanced Universal Serial Communication Interface (eUSCI)

The eUSCI module is used for serial data communication. The eUSCI module supports synchronous communication protocols such as SPI (3- or 4-pin) and I^2C, and asynchronous communication protocols such as UART, enhanced UART with automatic baudrate detection, and IrDA.

The eUSCI_An module supports for SPI (3- or 4-pin), UART, enhanced UART, or IrDA.

The eUSCI_Bn module supports for SPI (3- or 4-pin) or I^2C.

Three eUSCI_A and one eUSCI_B modules are implemented in MSP430F67xx devices.

Copyright © 2011–2018, Texas Instruments Incorporated

6.11.13 ADC10_A

The ADC10_A module supports fast 10-bit analog-to-digital conversions. The module implements a 10-bit SAR core, sample select control, reference generator, and a conversion results buffer. A window comparator with a lower and upper limits allows CPU-independent result monitoring with three window comparator interrupt flags.

6.11.14 SD24_B

The SD24_B module integrates up to three independent 24-bit sigma-delta analog-to-digital converters. Each converter is designed with a fully differential analog input pair and programmable gain amplifier input stage. The converters are based on second-order over-sampling sigma-delta modulators and digital decimation filters. The decimation filters are comb type filters with selectable oversampling ratios of up to 1024.

6.11.15 TA0

TA0 is a 16-bit timer/counter (Timer_A type) with three capture/compare registers. TA0 can support multiple capture/compares, PWM outputs, and interval timing (see Table 6-13). TA0 also has extensive interrupt capabilities. Interrupts may be generated from the counter on overflow conditions and from each of the capture/compare registers.

Table 6-13. TA0 Signal Connections

DEVICE INPUT SIGNAL	MODULE INPUT NAME	MODULE BLOCK	MODULE OUTPUT SIGNAL	DEVICE OUTPUT SIGNAL
PM_TACLK	TACLK	Timer	NA	NA
ACLK (internal)	ACLK			
SMCLK (internal)	SMCLK			
PM_TACLK	INCLK			
PM_TA0.0	CCI0A	CCR0	TA0	PM_TA0.0
DVSS	CCI0B			
DVSS	GND			
DVCC	VCC			
PM_TA0.1	CCI1A	CCR1	TA1	PM_TA0.1
ACLK (internal)	CCI1B			ADC10_A (internal) ADC10SHSx = {1}
DVSS	GND			SD24_B (internal) SD24SCSx = {1}
DVCC	VCC			
PM_TA0.2	CCI2A	CCR2	TA2	PM_TA0.2
DVSS	CCI2B			
DVSS	GND			
DVCC	VCC			

6.11.16 TA1

TA1 is a 16-bit timer/counter (Timer_A type) with two capture/compare registers. TA1 can support multiple capture/compares, PWM outputs, and interval timing (see Table 6-14). TA1 also has extensive interrupt capabilities. Interrupts may be generated from the counter on overflow conditions and from each of the capture/compare registers.

Table 6-14. TA1 Signal Connections

DEVICE INPUT SIGNAL	MODULE INPUT NAME	MODULE BLOCK	MODULE OUTPUT SIGNAL	DEVICE OUTPUT SIGNAL
				PZ
PM_TACLK	TACLK	Timer	NA	NA
ACLK (internal)	ACLK			
SMCLK (internal)	SMCLK			
PM_TACLK	INCLK			
PM_TA1.0	CCI0A	CCR0	TA0	PM_TA1.0
DVSS	CCI0B			
DVSS	GND			
DVCC	VCC			
PM_TA1.1	CCI1A	CCR1	TA1	PM_TA1.1
ACLK (internal)	CCI1B			
DVSS	GND			
DVCC	VCC			

Copyright © 2011–2018, Texas Instruments Incorporated

6.11.17 TA2

TA2 is a 16-bit timer/counter (Timer_A type) with two capture/compare registers. TA2 can support multiple capture/compares, PWM outputs, and interval timing (see Table 6-15). TA2 also has extensive interrupt capabilities. Interrupts may be generated from the counter on overflow conditions and from each of the capture/compare registers.

Table 6-15. TA2 Signal Connections

DEVICE INPUT SIGNAL	MODULE INPUT NAME	MODULE BLOCK	MODULE OUTPUT SIGNAL	DEVICE OUTPUT SIGNAL
PM_TACLK	TACLK	Timer	NA	NA
ACLK (internal)	ACLK			
SMCLK (internal)	SMCLK			
PM_TACLK	INCLK			
PM_TA2.0	CCI0A	CCR0	TA0	PM_TA2.0
DVSS	CCI0B			
DVSS	GND			
DVCC	VCC			
PM_TA2.1	CCI1A	CCR1	TA1	PM_TA2.1
ACLK (internal)	CCI1B			SD24_B (internal) SD24SCSx = {2}
DVSS	GND			
DVCC	VCC			

6.11.18 TA3

TA3 is a 16-bit timer/counter (Timer_A type) with two capture/compare registers. TA3 can support multiple capture/compares, PWM outputs, and interval timing (see Table 6-16). TA3 also has extensive interrupt capabilities. Interrupts may be generated from the counter on overflow conditions and from each of the capture/compare registers.

Table 6-16. TA3 Signal Connections

DEVICE INPUT SIGNAL	MODULE INPUT NAME	MODULE BLOCK	MODULE OUTPUT SIGNAL	DEVICE OUTPUT SIGNAL
PM_TACLK	TACLK	Timer	NA	
ACLK (internal)	ACLK			
SMCLK (internal)	SMCLK			
PM_TACLK	INCLK			
PM_TA3.0	CCI0A	CCR0	TA0	PM_TA3.0
DVSS	CCI0B			ADC10_A (internal) ADC10SHSx = {2}
DVSS	GND			
DVCC	VCC			
PM_TA3.1	CCI1A	CCR1	TA1	PM_TA3.1
ACLK (internal)	CCI1B			SD24_B (internal) SD24SCSx = {3}
DVSS	GND			
DVCC	VCC			

6.11.19 SD24_B Triggers

Table 6-17 lists the input trigger connections to SD24_B converters from Timer_A modules and output trigger pulse connection from SD24_B to ADC10_A.

Table 6-17. SD24_B Input/Output Trigger Connections

DEVICE INPUT SIGNAL	MODULE INPUT SIGNAL	MODULE BLOCK	MODULE OUTPUT SIGNAL	DEVICE OUTPUT SIGNAL
TA0.1 (internal)	SD24_B SD24SCSx = {1}	SD24_B	Trigger Pulse	ADC10_A (internal) ADC10SHSx = {3}
TA2.1 (internal)	SD24_B SD24SCSx = {2}			
TA3.1 (internal)	SD24_B SD24SCSx = {3}			

6.11.20 ADC10_A Triggers

Table 6-18 lists the input trigger connections to ADC10_A from Timer_A modules and SD24_B.

Table 6-18. ADC10_A Input Trigger Connections

DEVICE INPUT SIGNAL	MODULE INPUT SIGNAL	MODULE BLOCK
TA0.1 (internal)	ADC10_A ADC10SHSx = {1}	ADC10_A
TA3.0 (internal)	ADC10_A ADC10SHSx = {2}	
SD24_B trigger pulse (internal)	ADC10_A ADC10SHSx = {3}	

6.11.21 Real-Time Clock (RTC_C)

The RTC_C module can be configured for calendar mode providing seconds, hours, day of week, day of month, month, and year. The RTC_C control and configuration registers are password protected to ensure clock integrity against runaway code. Calendar mode integrates an internal calendar that compensates for months with less than 31 days and includes leap year correction. The RTC_C also supports flexible alarm functions, offset calibration, and temperature compensation. The RTC_C on this device operates on dedicated AUXVCC3 supply and supports operation in LPM3.5.

6.11.22 Reference (REF) Module Voltage Reference

The REF module generates all critical reference voltages that can be used by the various analog peripherals in the device. These include the ADC10_A, LCD_C, and SD24_B modules.

6.11.23 LCD_C

The LCD_C driver generates the segment and common signals required to drive a liquid crystal display (LCD). The LCD_C controller has dedicated data memories to hold segment drive information. Common and segment signals are generated as defined by the mode. Static, 2-mux, 3-mux, 4-mux, up to 8-mux LCDs are supported. The module can provide a LCD voltage independent of the supply voltage with its integrated charge pump. It is possible to control the level of the LCD voltage, and thus contrast, by software. The module also provides an automatic blinking capability for individual segments in static, 2-mux, 3-mux, and 4-mux modes.

Copyright © 2011–2018, Texas Instruments Incorporated

6.11.24 Embedded Emulation Module (EEM) (S Version)

The EEM supports real-time in-system debugging. The S version of the EEM has the following features:

- Three hardware triggers or breakpoints on memory access
- One hardware trigger or breakpoint on CPU register write access
- Up to four hardware triggers can be combined to form complex triggers or breakpoints
- One cycle counter
- Clock control on module level

6.11.25 Peripheral File Map

Table 6-19 lists the base address for the registers of each supported peripheral.

Table 6-19. Peripherals

MODULE NAME	BASE ADDRESS	OFFSET ADDRESS RANGE
Special Functions (see Table 6-20)	0100h	000h to 01Fh
PMM (see Table 6-21)	0120h	000h to 01Fh
Flash Control (see Table 6-22)	0140h	000h to 00Fh
CRC16 (see Table 6-23)	0150h	000h to 007h
RAM Control (see Table 6-24)	0158h	000h to 001h
Watchdog (see Table 6-25)	015Ch	000h to 001h
UCS (see Table 6-26)	0160h	000h to 01Fh
SYS (see Table 6-27)	0180h	000h to 01Fh
Shared Reference (see Table 6-28)	01B0h	000h to 001h
Port Mapping Control (see Table 6-29)	01C0h	000h to 007h
Port Mapping Port P1 (see Table 6-30)	01C8h	000h to 007h
Port Mapping Port P2 (see Table 6-31)	01D0h	000h to 007h
Port Mapping Port P3 (see Table 6-32)	01D8h	000h to 007h
Port P1 and P2 (see Table 6-33)	0200h	000h to 01Fh
Port P3 and P4 (see Table 6-34)	0220h	000h to 00Bh
Port P5 and P6 (see Table 6-35)	0240h	000h to 00Bh
Port P7 and P8 (see Table 6-36) (Port P7 and P8 not available in MSP430F67xxIPN)	0260h	000h to 00Bh
Port P9 (Port P9 not available in MSP430F67xxIPN) (see Table 6-37)	0280h	000h to 00Bh
Port PJ (refer toTable 6-38)	0320h	000h to 01Fh
Timer TA0 (see Table 6-39)	0340h	000h to 03Fh
Timer TA1 (see Table 6-40)	0380h	000h to 03Fh
Timer TA2 (see Table 6-41)	0400h	000h to 03Fh
Timer TA3 (see Table 6-42)	0440h	000h to 03Fh
Backup Memory (see Table 6-43)	0480h	000h to 00Fh
RTC_C (see Table 6-44)	04A0h	000h to 01Fh
32-Bit Hardware Multiplier (see Table 6-45)	04C0h	000h to 02Fh
DMA General Control (see Table 6-46)	0500h	000h to 00Fh
DMA Channel 0 (see Table 6-47)	0500h	010h to 01Fh
DMA Channel 1 (see Table 6-48)	0500h	020h to 02Fh
DMA Channel 2 (see Table 6-49)	0500h	030h to 03Fh
eUSCI_A0 (see Table 6-50)	05C0h	000h to 01Fh
eUSCI_A1 (see Table 6-51)	05E0h	000h to 01Fh
eUSCI_A2 (see Table 6-52)	0600h	000h to 01Fh
eUSCI_B0 (see Table 6-53)	0640h	000h to 02Fh
ADC10_A (see Table 6-54)	0740h	000h to 01Fh
SD24_B(see Table 6-55)	0800h	000h to 06Fh
Auxiliary Supply (see Table 6-49)	09E0h	000h to 01Fh
LCD_C (see Table 6-57)	0A00h	000h to 05Fh

Copyright © 2011–2018, Texas Instruments Incorporated

Table 6-20. Special Function Registers (Base Address: 0100h)

REGISTER DESCRIPTION	REGISTER	OFFSET
SFR interrupt enable	SFRIE1	00h
SFR interrupt flag	SFRIFG1	02h
SFR reset pin control	SFRRPCR	04h

Table 6-21. PMM Registers (Base Address: 0120h)

REGISTER DESCRIPTION	REGISTER	OFFSET
PMM control 0	PMMCTL0	00h
PMM control 1	PMMCTL1	02h
SVS high-side control	SVSMHCTL	04h
SVS low-side control	SVSMLCTL	06h
PMM interrupt flags	PMMIFG	0Ch
PMM interrupt enable	PMMIE	0Eh
PMM power mode 5 control 0	PM5CTL0	10h

Table 6-22. Flash Control Registers (Base Address: 0140h)

REGISTER DESCRIPTION	REGISTER	OFFSET
Flash control 1	FCTL1	00h
Flash control 3	FCTL3	04h
Flash control 4	FCTL4	06h

Table 6-23. CRC16 Registers (Base Address: 0150h)

REGISTER DESCRIPTION	REGISTER	OFFSET
CRC data input	CRC16DI	00h
CRC data input reverse byte	CRC16DIRB	02h
CRC result	CRCINIRES	04h
CRC result reverse byte	CRCRESR	06h

Table 6-24. RAM Control Registers (Base Address: 0158h)

REGISTER DESCRIPTION	REGISTER	OFFSET
RAM control 0	RCCTL0	00h

Table 6-25. Watchdog Registers (Base Address: 015Ch)

REGISTER DESCRIPTION	REGISTER	OFFSET
Watchdog timer control	WDTCTL	00h

Table 6-26. UCS Registers (Base Address: 0160h)

REGISTER DESCRIPTION	REGISTER	OFFSET
UCS control 0	UCSCTL0	00h
UCS control 1	UCSCTL1	02h
UCS control 2	UCSCTL2	04h
UCS control 3	UCSCTL3	06h
UCS control 4	UCSCTL4	08h
UCS control 5	UCSCTL5	0Ah
UCS control 6	UCSCTL6	0Ch
UCS control 7	UCSCTL7	0Eh

Copyright © 2011–2018, Texas Instruments Incorporated

Table 6-26. UCS Registers (Base Address: 0160h) (continued)

REGISTER DESCRIPTION	REGISTER	OFFSET
UCS control 8	UCSCTL8	10h

Table 6-27. SYS Registers (Base Address: 0180h)

REGISTER DESCRIPTION	REGISTER	OFFSET
System control	SYSCTL	00h
Bootloader configuration area	SYSBSLC	02h
JTAG mailbox control	SYSJMBC	06h
JTAG mailbox input 0	SYSJMBI0	08h
JTAG mailbox input 1	SYSJMBI1	0Ah
JTAG mailbox output 0	SYSJMBO0	0Ch
JTAG mailbox output 1	SYSJMBO1	0Eh
Bus error vector generator	SYSBERRIV	18h
User NMI vector generator	SYSUNIV	1Ah
System NMI vector generator	SYSSNIV	1Ch
Reset vector generator	SYSRSTIV	1Eh

Table 6-28. Shared Reference Registers (Base Address: 01B0h)

REGISTER DESCRIPTION	REGISTER	OFFSET
Shared reference control	REFCTL	00h

Table 6-29. Port Mapping Controller (Base Address: 01C0h)

REGISTER DESCRIPTION	REGISTER	OFFSET
Port mapping password	PMAPPWD	00h
Port mapping control	PMAPCTL	02h

Table 6-30. Port Mapping for Port P1 (Base Address: 01C8h)

REGISTER DESCRIPTION	REGISTER	OFFSET
Port P1.0 mapping	P1MAP0	00h
Port P1.1 mapping	P1MAP1	01h
Port P1.2 mapping	P1MAP2	02h
Port P1.3 mapping	P1MAP3	03h
Port P1.4 mapping	P1MAP4	04h
Port P1.5 mapping	P1MAP5	05h
Port P1.6 mapping	P1MAP6	06h
Port P1.7 mapping	P1MAP7	07h

Table 6-31. Port Mapping for Port P2 (Base Address: 01D0h)

REGISTER DESCRIPTION	REGISTER	OFFSET
Port P2.0 mapping	P2MAP0	00h
Port P2.1 mapping	P2MAP2	01h
Port P2.2 mapping	P2MAP2	02h
Port P2.3 mapping	P2MAP3	03h
Port P2.4 mapping	P2MAP4	04h
Port P2.5 mapping	P2MAP5	05h
Port P2.6 mapping	P2MAP6	06h
Port P2.7 mapping	P2MAP7	07h

Copyright © 2011–2018, Texas Instruments Incorporated

Table 6-32. Port Mapping for Port P3 (Base Address: 01D8h)

REGISTER DESCRIPTION	REGISTER	OFFSET
Port P3.0 mapping	P3MAP0	00h
Port P3.1 mapping	P3MAP3	01h
Port P3.2 mapping	P3MAP2	02h
Port P3.3 mapping	P3MAP3	03h
Port P3.4 mapping	P3MAP4	04h
Port P3.5 mapping	P3MAP5	05h
Port P3.6 mapping	P3MAP6	06h
Port P3.7 mapping	P3MAP7	07h

Table 6-33. Port P1 and P2 Registers (Base Address: 0200h)

REGISTER DESCRIPTION	REGISTER	OFFSET
Port P1 input	P1IN	00h
Port P1 output	P1OUT	02h
Port P1 direction	P1DIR	04h
Port P1 resistor enable	P1REN	06h
Port P1 drive strength	P1DS	08h
Port P1 selection	P1SEL	0Ah
Port P1 interrupt vector word	P1IV	0Eh
Port P1 interrupt edge select	P1IES	18h
Port P1 interrupt enable	P1IE	1Ah
Port P1 interrupt flag	P1IFG	1Ch
Port P2 input	P2IN	01h
Port P2 output	P2OUT	03h
Port P2 direction	P2DIR	05h
Port P2 resistor enable	P2REN	07h
Port P2 drive strength	P2DS	09h
Port P2 selection	P2SEL	0Bh
Port P2 interrupt vector word	P2IV	1Eh
Port P2 interrupt edge select	P2IES	19h
Port P2 interrupt enable	P2IE	1Bh
Port P2 interrupt flag	P2IFG	1Dh

Table 6-34. Port P3 and P4 Registers (Base Address: 0220h)

REGISTER DESCRIPTION	REGISTER	OFFSET
Port P3 input	P3IN	00h
Port P3 output	P3OUT	02h
Port P3 direction	P3DIR	04h
Port P3 resistor enable	P3REN	06h
Port P3 drive strength	P3DS	08h
Port P3 selection	P3SEL	0Ah
Port P4 input	P4IN	01h
Port P4 output	P4OUT	03h
Port P4 direction	P4DIR	05h
Port P4 resistor enable	P4REN	07h
Port P4 drive strength	P4DS	09h
Port P4 selection	P4SEL	0Bh

Copyright © 2011–2018, Texas Instruments Incorporated

Table 6-35. Port P5 and P6 Registers (Base Address: 0240h)

REGISTER DESCRIPTION	REGISTER	OFFSET
Port P5 input	P5IN	00h
Port P5 output	P5OUT	02h
Port P5 direction	P5DIR	04h
Port P5 resistor enable	P5REN	06h
Port P5 drive strength	P5DS	08h
Port P5 selection	P5SEL	0Ah
Port P6 input	P6IN	01h
Port P6 output	P6OUT	03h
Port P6 direction	P6DIR	05h
Port P6 resistor enable	P6REN	07h
Port P6 drive strength	P6DS	09h
Port P6 selection	P6SEL	0Bh

Table 6-36. Port P7 and P8 Registers (Base Address: 0260h)

REGISTER DESCRIPTION	REGISTER	OFFSET
Port P7 input	P7IN	00h
Port P7 output	P7OUT	02h
Port P7 direction	P7DIR	04h
Port P7 resistor enable	P7REN	06h
Port P7 drive strength	P7DS	08h
Port P7 selection	P7SEL	0Ah
Port P8 input	P8IN	01h
Port P8 output	P8OUT	03h
Port P8 direction	P8DIR	05h
Port P8 resistor enable	P8REN	07h
Port P8 drive strength	P8DS	09h
Port P8 selection	P8SEL	0Bh

Table 6-37. Port P9 Registers (Base Address: 0280h)

REGISTER DESCRIPTION	REGISTER	OFFSET
Port P9 input	P9IN	00h
Port P9 output	P9OUT	02h
Port P9 direction	P9DIR	04h
Port P9 resistor enable	P9REN	06h
Port P9 drive strength	P9DS	08h
Port P9 selection	P9SEL	0Ah

Table 6-38. Port J Registers (Base Address: 0320h)

REGISTER DESCRIPTION	REGISTER	OFFSET
Port PJ input	PJIN	00h
Port PJ output	PJOUT	02h
Port PJ direction	PJDIR	04h
Port PJ resistor enable	PJREN	06h
Port PJ drive strength	PJDS	08h
Port PJ selection	PJSEL	0Ah

Copyright © 2011–2018, Texas Instruments Incorporated

Table 6-39. TA0 Registers (Base Address: 0340h)

REGISTER DESCRIPTION	REGISTER	OFFSET
TA0 control	TA0CTL	00h
Capture/compare control 0	TA0CCTL0	02h
Capture/compare control 1	TA0CCTL1	04h
Capture/compare control 2	TA0CCTL2	06h
TA0 counter	TA0R	10h
Capture/compare 0	TA0CCR0	12h
Capture/compare 1	TA0CCR1	14h
Capture/compare 2	TA0CCR2	16h
TA0 expansion 0	TA0EX0	20h
TA0 interrupt vector	TA0IV	2Eh

Table 6-40. TA1 Registers (Base Address: 0380h)

REGISTER DESCRIPTION	REGISTER	OFFSET
TA1 control	TA1CTL	00h
Capture/compare control 0	TA1CCTL0	02h
Capture/compare control 1	TA1CCTL1	04h
TA1 counter	TA1R	10h
Capture/compare 0	TA1CCR0	12h
Capture/compare 1	TA1CCR1	14h
TA1 expansion 0	TA1EX0	20h
TA1 interrupt vector	TA1IV	2Eh

Table 6-41. TA2 Registers (Base Address: 0400h)

REGISTER DESCRIPTION	REGISTER	OFFSET
TA2 control	TA2CTL	00h
Capture/compare control 0	TA2CCTL0	02h
Capture/compare control 1	TA2CCTL1	04h
TA2 counter	TA2R	10h
Capture/compare 0	TA2CCR0	12h
Capture/compare 1	TA2CCR1	14h
TA2 expansion 0	TA2EX0	20h
TA2 interrupt vector	TA2IV	2Eh

Table 6-42. TA3 Registers (Base Address: 0440h)

REGISTER DESCRIPTION	REGISTER	OFFSET
TA3 control	TA3CTL	00h
Capture/compare control 0	TA3CCTL0	02h
Capture/compare control 1	TA3CCTL1	04h
TA3 counter	TA3R	10h
Capture/compare 0	TA3CCR0	12h
Capture/compare 1	TA3CCR1	14h
TA3 expansion 0	TA3EX0	20h
TA3 interrupt vector	TA3IV	2Eh

Copyright © 2011–2018, Texas Instruments Incorporated

Table 6-43. Backup Memory Registers (Base Address: 0480h)

REGISTER DESCRIPTION	REGISTER	OFFSET
Backup memory 0	BAKMEM0	00h
Backup memory 1	BAKMEM1	02h
Backup memory 2	BAKMEM2	04h
Backup memory 3	BAKMEM3	06h

Table 6-44. RTC_C Registers (Base Address: 04A0h)

REGISTER DESCRIPTION	REGISTER	OFFSET
RTC control 0	RTCCTL0	00h
RTC password	RTCPWD	01h
RTC control 1	RTCCTL1	02h
RTC control 3	RTCCTL3	03h
RTC offset calibration	RTCOCAL	04h
RTC temperature compensation	RTCTCMP	06h
RTC prescaler 0 control	RTCPS0CTL	08h
RTC prescaler 1 control	RTCPS1CTL	0Ah
RTC prescaler 0	RTCPS0	0Ch
RTC prescaler 1	RTCPS1	0Dh
RTC interrupt vector word	RTCIV	0Eh
RTC seconds	RTCSEC	10h
RTC minutes	RTCMIN	11h
RTC hours	RTCHOUR	12h
RTC day of week	RTCDOW	13h
RTC days	RTCDAY	14h
RTC month	RTCMON	15h
RTC year	RTCYEAR	16h
RTC alarm minutes	RTCAMIN	18h
RTC alarm hours	RTCAHOUR	19h
RTC alarm day of week	RTCADOW	1Ah
RTC alarm days	RTCADAY	1Bh
Binary-to-BCD conversion	BIN2BCD	1Ch
BCD-to-binary conversion	BCD2BIN	1Eh

Copyright © 2011–2018, Texas Instruments Incorporated

Table 6-45. 32-Bit Hardware Multiplier Registers (Base Address: 04C0h)

REGISTER DESCRIPTION	REGISTER	OFFSET
16-bit operand 1 – multiply	MPY	00h
16-bit operand 1 – signed multiply	MPYS	02h
16-bit operand 1 – multiply accumulate	MAC	04h
16-bit operand 1 – signed multiply accumulate	MACS	06h
16-bit operand 2	OP2	08h
16 × 16 result low word	RESLO	0Ah
16 × 16 result high word	RESHI	0Ch
16 × 16 sum extension	SUMEXT	0Eh
32-bit operand 1 – multiply low word	MPY32L	10h
32-bit operand 1 – multiply high word	MPY32H	12h
32-bit operand 1 – signed multiply low word	MPYS32L	14h
32-bit operand 1 – signed multiply high word	MPYS32H	16h
32-bit operand 1 – multiply accumulate low word	MAC32L	18h
32-bit operand 1 – multiply accumulate high word	MAC32H	1Ah
32-bit operand 1 – signed multiply accumulate low word	MACS32L	1Ch
32-bit operand 1 – signed multiply accumulate high word	MACS32H	1Eh
32-bit operand 2 – low word	OP2L	20h
32-bit operand 2 – high word	OP2H	22h
32 × 32 result 0 – least significant word	RES0	24h
32 × 32 result 1	RES1	26h
32 × 32 result 2	RES2	28h
32 × 32 result 3 – most significant word	RES3	2Ah
MPY32 control 0	MPY32CTL0	2Ch

Table 6-46. DMA General Control Registers (Base Address: 0500h)

REGISTER DESCRIPTION	REGISTER	OFFSET
DMA module control 0	DMACTL0	00h
DMA module control 1	DMACTL1	02h
DMA module control 2	DMACTL2	04h
DMA module control 3	DMACTL3	06h
DMA module control 4	DMACTL4	08h
DMA interrupt vector	DMAIV	0Eh

Table 6-47. DMA Channel 0 Registers (Base Address: 0500h)

REGISTER DESCRIPTION	REGISTER	OFFSET
DMA channel 0 control	DMA0CTL	10h
DMA channel 0 source address low	DMA0SAL	12h
DMA channel 0 source address high	DMA0SAH	14h
DMA channel 0 destination address low	DMA0DAL	16h
DMA channel 0 destination address high	DMA0DAH	18h
DMA channel 0 transfer size	DMA0SZ	1Ah

Table 6-48. DMA Channel 1 Registers (Base Address: 0500h)

REGISTER DESCRIPTION	REGISTER	OFFSET
DMA channel 1 control	DMA1CTL	20h
DMA channel 1 source address low	DMA1SAL	22h
DMA channel 1 source address high	DMA1SAH	24h
DMA channel 1 destination address low	DMA1DAL	26h
DMA channel 1 destination address high	DMA1DAH	28h
DMA channel 1 transfer size	DMA1SZ	2Ah

Table 6-49. DMA Channel 2 Registers (Base Address: 0500h)

REGISTER DESCRIPTION	REGISTER	OFFSET
DMA channel 2 control	DMA2CTL	30h
DMA channel 2 source address low	DMA2SAL	32h
DMA channel 2 source address high	DMA2SAH	34h
DMA channel 2 destination address low	DMA2DAL	36h
DMA channel 2 destination address high	DMA2DAH	38h
DMA channel 2 transfer size	DMA2SZ	3Ah

Table 6-50. eUSCI_A0 Registers (Base Address: 05C0h)

REGISTER DESCRIPTION	REGISTER	OFFSET
eUSCI_A control word 0	UCA0CTLW0	00h
eUSCI _A control word 1	UCA0CTLW1	02h
eUSCI_A baud rate 0	UCA0BR0	06h
eUSCI_A baud rate 1	UCA0BR1	07h
eUSCI_A modulation control	UCA0MCTLW	08h
eUSCI_A status	UCA0STAT	0Ah
eUSCI_A receive buffer	UCA0RXBUF	0Ch
eUSCI_A transmit buffer	UCA0TXBUF	0Eh
eUSCI_A LIN control	UCA0ABCTL	10h
eUSCI_A IrDA transmit control	UCA0IRTCTL	12h
eUSCI_A IrDA receive control	UCA0IRRCTL	13h
eUSCI_A interrupt enable	UCA0IE	1Ah
eUSCI_A interrupt flags	UCA0IFG	1Ch
eUSCI_A interrupt vector word	UCA0IV	1Eh

Copyright © 2011–2018, Texas Instruments Incorporated

Table 6-51. eUSCI_A1 Registers (Base Address:05E0h)

REGISTER DESCRIPTION	REGISTER	OFFSET
eUSCI_A control word 0	UCA1CTLW0	00h
eUSCI _A control word 1	UCA1CTLW1	02h
eUSCI_A baud rate 0	UCA1BR0	06h
eUSCI_A baud rate 1	UCA1BR1	07h
eUSCI_A modulation control	UCA1MCTLW	08h
eUSCI_A status	UCA1STAT	0Ah
eUSCI_A receive buffer	UCA1RXBUF	0Ch
eUSCI_A transmit buffer	UCA1TXBUF	0Eh
eUSCI_A LIN control	UCA1ABCTL	10h
eUSCI_A IrDA transmit control	UCA1IRTCTL	12h
eUSCI_A IrDA receive control	UCA1IRRCTL	13h
eUSCI_A interrupt enable	UCA1IE	1Ah
eUSCI_A interrupt flags	UCA1IFG	1Ch
eUSCI_A interrupt vector word	UCA1IV	1Eh

Table 6-52. eUSCI_A2 Registers (Base Address:0600h)

REGISTER DESCRIPTION	REGISTER	OFFSET
eUSCI_A control word 0	UCA2CTLW0	00h
eUSCI _A control word 1	UCA2CTLW1	02h
eUSCI_A baud rate 0	UCA2BR0	06h
eUSCI_A baud rate 1	UCA2BR1	07h
eUSCI_A modulation control	UCA2MCTLW	08h
eUSCI_A status	UCA2STAT	0Ah
eUSCI_A receive buffer	UCA2RXBUF	0Ch
eUSCI_A transmit buffer	UCA2TXBUF	0Eh
eUSCI_A LIN control	UCA2ABCTL	10h
eUSCI_A IrDA transmit control	UCA2IRTCTL	12h
eUSCI_A IrDA receive control	UCA2IRRCTL	13h
eUSCI_A interrupt enable	UCA2IE	1Ah
eUSCI_A interrupt flags	UCA2IFG	1Ch
eUSCI_A interrupt vector word	UCA2IV	1Eh

Copyright © 2011–2018, Texas Instruments Incorporated

Table 6-53. eUSCI_B0 Registers (Base Address: 0640h)

REGISTER DESCRIPTION	REGISTER	OFFSET
eUSCI_B control word 0	UCB0CTLW0	00h
eUSCI_B control word 1	UCB0CTLW1	02h
eUSCI_B bit rate 0	UCB0BR0	06h
eUSCI_B bit rate 1	UCB0BR1	07h
eUSCI_B status word	UCB0STATW	08h
eUSCI_B byte counter threshold	UCB0TBCNT	0Ah
eUSCI_B receive buffer	UCB0RXBUF	0Ch
eUSCI_B transmit buffer	UCB0TXBUF	0Eh
eUSCI_B I2C own address 0	UCB0I2COA0	14h
eUSCI_B I2C own address 1	UCB0I2COA1	16h
eUSCI_B I2C own address 2	UCB0I2COA2	18h
eUSCI_B I2C own address 3	UCB0I2COA3	1Ah
eUSCI_B received address	UCB0ADDRX	1Ch
eUSCI_B address mask	UCB0ADDMASK	1Eh
eUSCI I2C slave address	UCB0I2CSA	20h
eUSCI interrupt enable	UCB0IE	2Ah
eUSCI interrupt flags	UCB0IFG	2Ch
eUSCI interrupt vector word	UCB0IV	2Eh

Table 6-54. ADC10_A Registers (Base Address: 0740h)

REGISTER DESCRIPTION	REGISTER	OFFSET
ADC10_A control 0	ADC10CTL0	00h
ADC10_A control 1	ADC10CTL1	02h
ADC10_A control 2	ADC10CTL2	04h
ADC10_A window comparator low threshold	ADC10LO	06h
ADC10_A window comparator high threshold	ADC10HI	08h
ADC10_A memory control 0	ADC10MCTL0	0Ah
ADC10_A conversion memory	ADC10MCTL0	12h
ADC10_A interrupt enable	ADC10IE	1Ah
ADC10_A interrupt flags	ADC10IGH	1Ch
ADC10_A interrupt vector word	ADC10IV	1Eh

Copyright © 2011–2018, Texas Instruments Incorporated

Table 6-55. SD24_B Registers (Base Address: 0800h)

REGISTER DESCRIPTION	REGISTER	OFFSET
SD24_B control 0	SD24BCTL0	00h
SD24_B control 1	SD24BCTL1	02h
SD24_B interrupt flag	SD24BIFG	0Ah
SD24_B interrupt enable	SD24BIE	0Ch
SD24_B interrupt vector	SD24BIV	0Eh
SD24_B converter 0 control	SD24BCCTL0	10h
SD24_B converter 0 input control	SD24BINCTL0	12h
SD24_B converter 0 OSR control	SD24BOSR0	14h
SD24_B converter 0 preload	SD24BPRE0	16h
SD24_B converter 1 control	SD24BCCTL1	18h
SD24_B converter 1 input control	SD24BINCTL1	1Ah
SD24_B converter 1 OSR control	SD24BOSR1	1Ch
SD24_B converter 1 preload	SD24BPRE1	1Eh
SD24_B converter 2 control	SD24BCCTL2	20h
SD24_B converter 2 input control	SD24BINCTL2	22h
SD24_B converter 2 OSR control	SD24BOSR2	24h
SD24_B converter 2 preload	SD24BPRE2	26h
SD24_B converter 0 conversion memory low word	SD24BMEML0	50h
SD24_B converter 0 conversion memory high word	SD24BMEMH0	52h
SD24_B converter 1 conversion memory low word	SD24BMEML1	54h
SD24_B converter 1 conversion memory high word	SD24BMEMH1	56h
SD24_B converter 2 conversion memory low word	SD24BMEML2	58h
SD24_B converter 2 conversion memory high word	SD24BMEMH2	5Ah

Table 6-56. Auxiliary Supplies Registers (Base Address: 09E0h)

REGISTER DESCRIPTION	REGISTER	OFFSET
Auxiliary supply control 0	AUXCTL0	00h
Auxiliary supply control 1	AUXCTL1	02h
Auxiliary supply control 2	AUXCTL2	04h
AUX2 charger control	AUX2CHCTL	12h
AUX3 charger control	AUX3CHCTL	14h
AUX ADC control	AUXADCCTL	16h
AUX interrupt flag	AUXIFG	1Ah
AUX interrupt enable	AUXIE	1Ch
AUX interrupt vector word	AUXIV	1Eh

Copyright © 2011–2018, Texas Instruments Incorporated

Table 6-57. LCD_C Registers (Base Address: 0A00h)

REGISTER DESCRIPTION	REGISTER	OFFSET
LCD_C control 0	LCDCCTL0	000h
LCD_C control 1	LCDCCTL1	002h
LCD_C blinking control	LCDCBLKCTL	004h
LCD_C memory control	LCDCMEMCTL	006h
LCD_C voltage control	LCDCVCTL	008h
LCD_C port control 0	LCDCPCTL0	00Ah
LCD_C port control 1	LCDCPCTL1	00Ch
LCD_C port control 2	LCDCPCTL2	00Eh
LCD_C charge pump control	LCDCCPCTL	012h
LCD_C interrupt vector	LCDCIV	01Eh
Static and 2- to 4-mux modes		
LCD_C memory 1	LCDM1	020h
LCD_C memory 2	LCDM2	021h
⋮	⋮	⋮
LCD_C memory 20	LCDM20	033h
LCD_C blinking memory 1	LCDBM1	040h
LCD_C blinking memory 2	LCDBM2	041h
⋮	⋮	⋮
LCD_C blinking memory 20	LCDBM20	053h
5- to 8-mux modes		
LCD_C memory 1	LCDM1	020h
LCD_C memory 2	LCDM2	021h
⋮	⋮	⋮
LCD_C memory 40	LCDM40	047h

Copyright © 2011–2018, Texas Instruments Incorporated

6.12 Input/Output Diagrams

6.12.1 Port P1 (P1.0 and P1.1) Input/Output With Schmitt Trigger (MSP430F67xxIPZ and MSP430F67xxIPN)

Figure 6-2 shows the port diagram. Table 6-58 summarizes the selection of the pin functions.

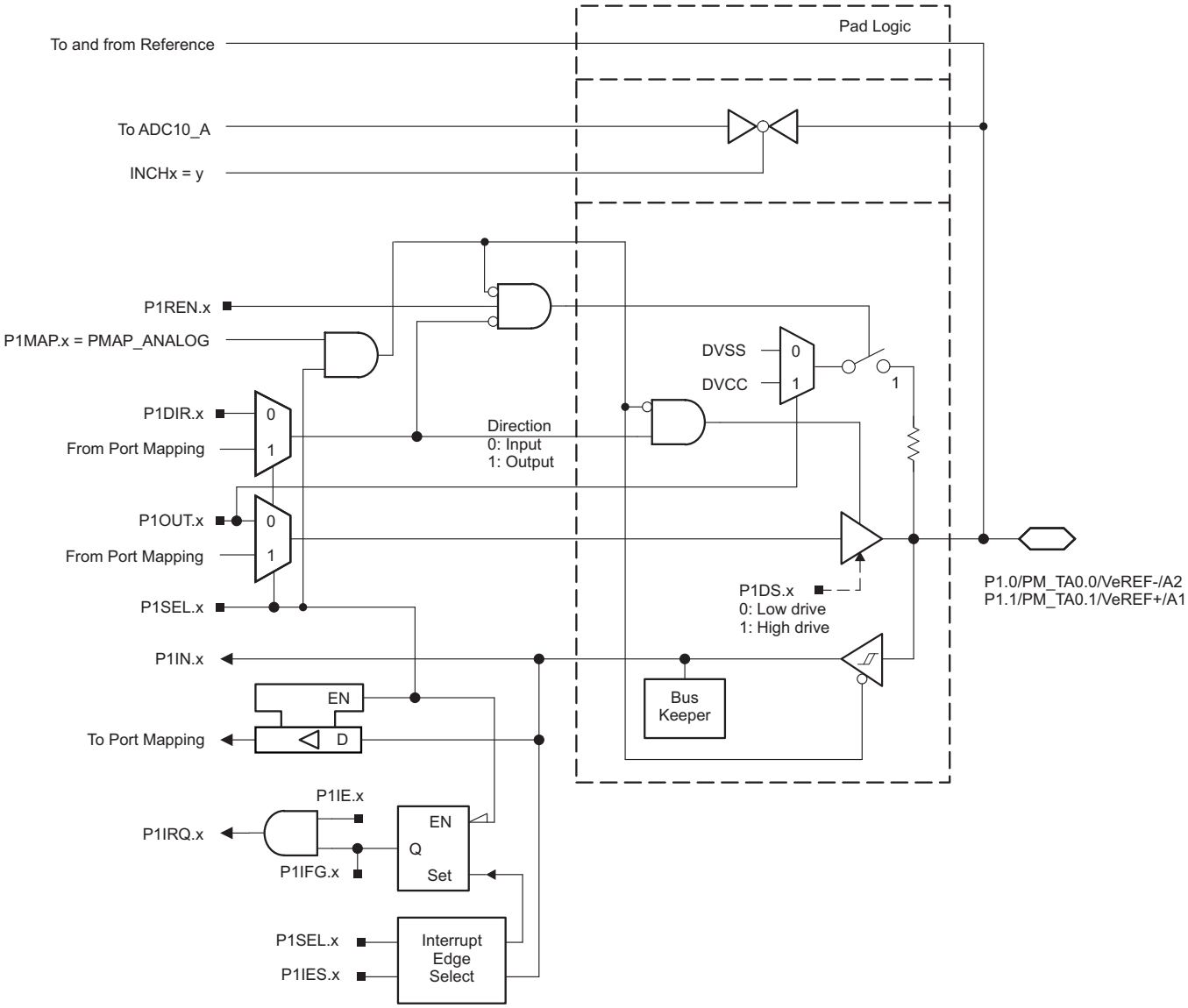

Figure 6-2. Port P1 (P1.0 and P1.1) Diagram (MSP430F67xxIPZ and MSP430F67xxIPN)

Table 6-58. Port P1 (P1.0 and P1.1) Pin Functions (MSP430F67xxIPZ and MSP430F67xxIPN)

PIN NAME (P1.x)	x	FUNCTION	CONTROL BITS OR SIGNALS (1)		
			P1DIR.x	P1SEL.x	P1MAPx
P1.0/PM_TA0.0/ VeREF-/A2	0	P1.0 (I/O)	I: 0; O: 1	0	X
		TA0.CCI0A	0	1	default
		TA0.TA0	1	1	default
		VeREF-/A2 (2)	X	1	= 31
P1.1/PM_TA0.1/ VeREF+/A1	1	P1.1 (I/O)	I: 0; O: 1	0	X
		TA0.CCI1A	0	1	default
		TA0.TA1	1	1	default
		VeREF+/A1 (2)	X	1	= 31

(1) X = Don't care
(2) Setting P1SEL.x bit together with P1MAPx = PM_ANALOG disables the output driver and the input Schmitt trigger.

Copyright © 2011–2018, Texas Instruments Incorporated

6.12.2 Port P1 (P1.2) Input/Output With Schmitt Trigger (MSP430F67xxIPZ and MSP430F67xxIPN)

Figure 6-3 shows the port diagram. Table 6-59 summarizes the selection of the pin functions.

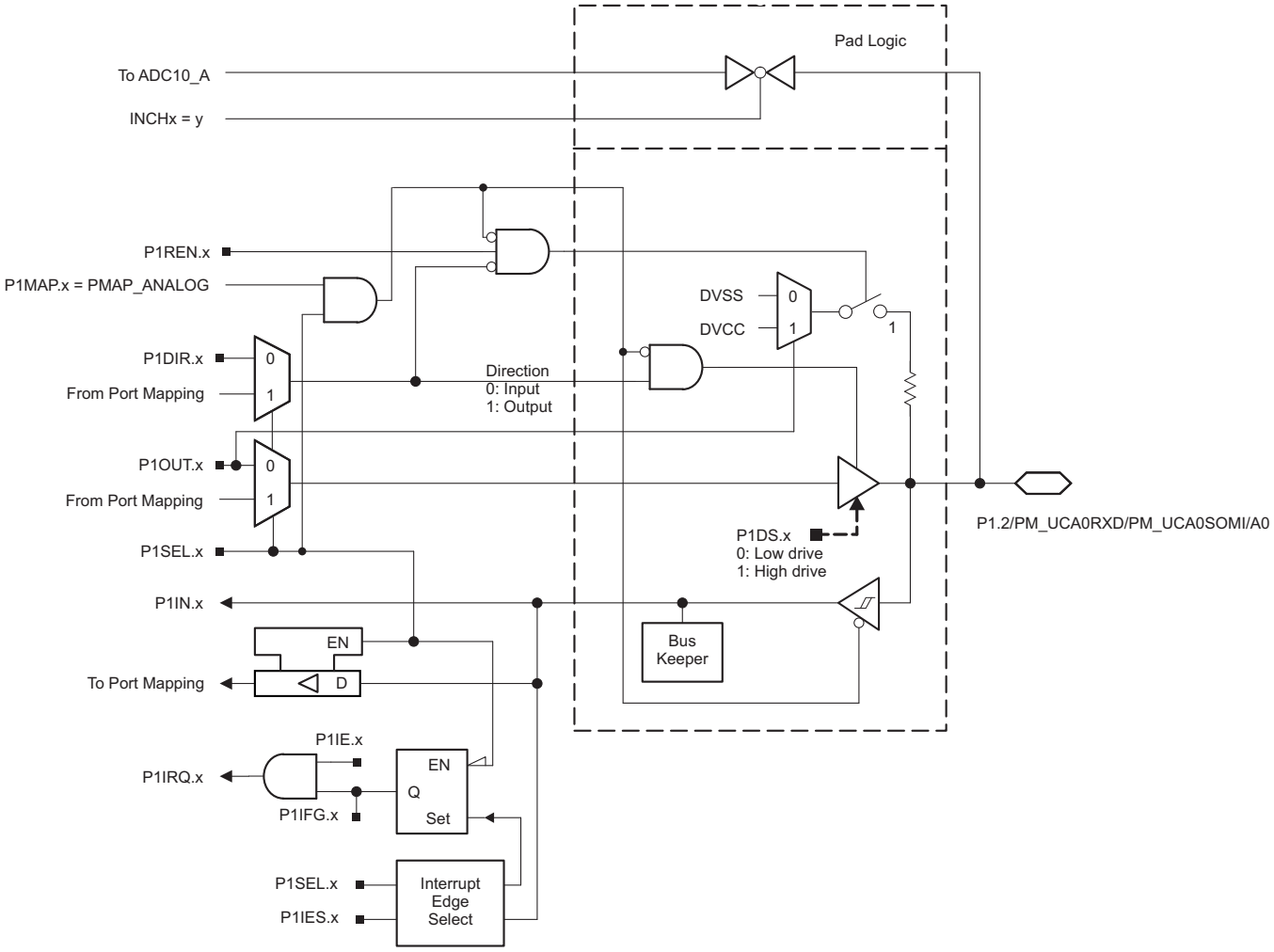

Figure 6-3. Port P1 (P1.2) Pin Functions (MSP430F67xxIPZ and MSP430F67xxIPN)

Table 6-59. Port P1 (P1.2) Pin Functions (MSP430F67xxIPZ and MSP430F67xxIPN)

PIN NAME (P1.x)	x	FUNCTION	CONTROL BITS OR SIGNALS (1)		
			P1DIR.x	P1SEL.x	P1MAPx
P1.2/PM_UCA0RXD/ PM_UCA0SOMI/A0	2	P1.2 (I/O)	I: 0; O: 1	0	X
		UCA0RXD/UCA0SOMI	X	1	default
		A0 (2)	X	1	= 31

(1) X = Don't care
(2) Setting P1SEL.x bit together with P1MAPx = PM_ANALOG disables the output driver and the input Schmitt trigger.

6.12.3 Port P1 (P1.3 to P1.5) Input/Output With Schmitt Trigger (MSP430F67xxIPZ and MSP430F67xxIPN)

Figure 6-4 shows the port diagram. Table 6-60 summarizes the selection of the pin functions.

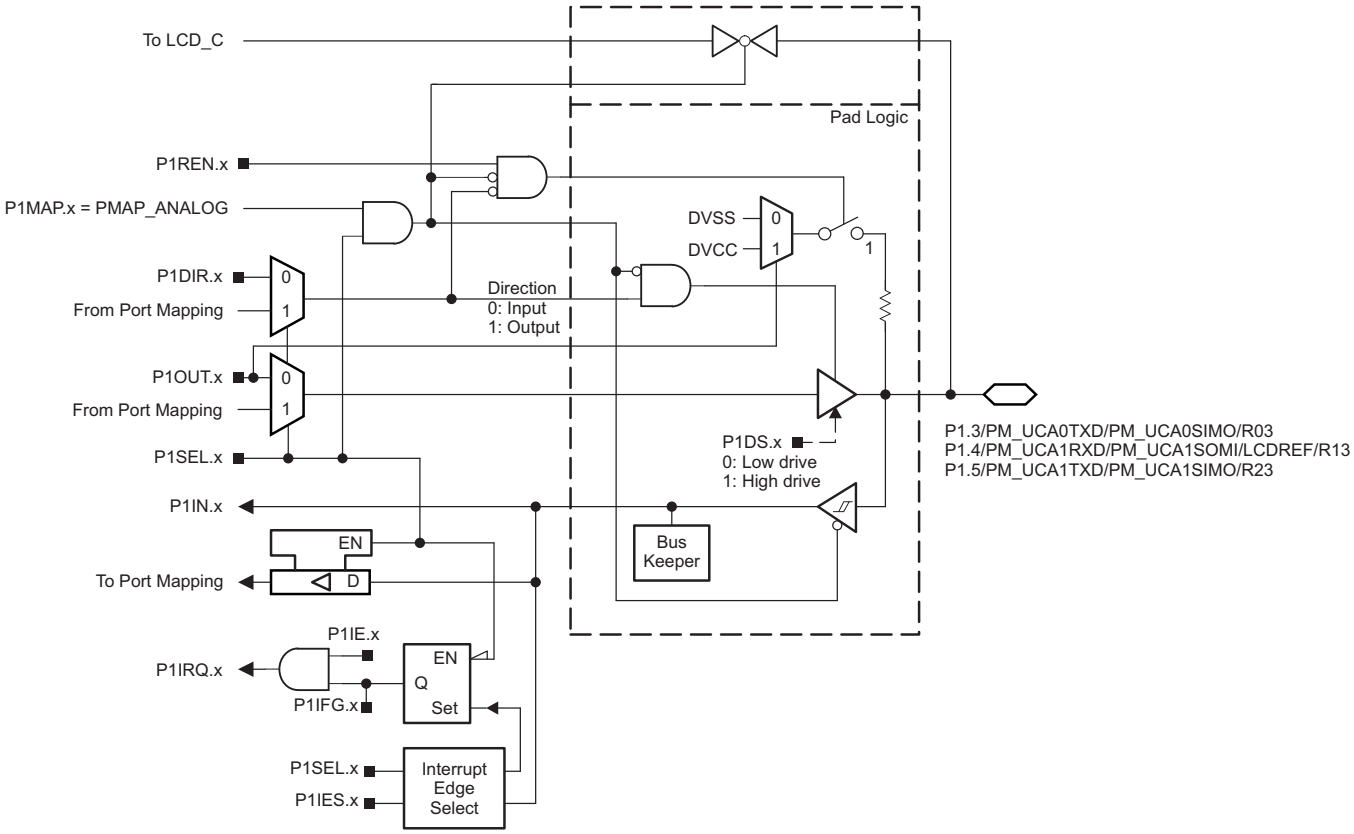

Figure 6-4. Port P1 (P1.3 to P1.5) Diagram (MSP430F67xxIPZ and MSP430F67xxIPN)

Table 6-60. Port P1 (P1.3 to P1.5) Pin Functions (MSP430F67xxIPZ and MSP430F67xxIPN)

PIN NAME (P1.x)	x	FUNCTION	CONTROL BITS OR SIGNALS (1)		
			P1DIR.x	P1SEL.x	P1MAPx
P1.3/PM_UCA0TXD/ PM_UCA0SIMO/R03	3	P1.3 (I/O)	I: 0; O: 1	0	X
		UCA0TXD/UCA0SIMO	X	1	default
		R03 (2)	X	1	= 31
P1.4/PM_UCA1RXD/ PM_UCA1SOMI/ LCDREF/R13	4	P1.4 (I/O)	I: 0; O: 1	0	X
		UCA1RXD/UCA1SOMI	X	1	default
		LCDREF/R13 (2)	X	1	= 31
P1.5/PM_UCA1TXD/ PM_UCA1SIMO/R23	5	P1.5 (I/O)	I: 0; O: 1	0	X
		UCA1TXD/UCA1SIMO	X	1	default
		R23 (2)	X	1	= 31

(1) X = Don't care
(2) Setting P1SEL.x bit together with P1MAPx = PM_ANALOG disables the output driver and the input Schmitt trigger.

Copyright © 2011–2018, Texas Instruments Incorporated

6.12.4 Port P1 (P1.6 and P1.7) (MSP430F67xxIPZ and MSP430F67xxIPN), Port P2 (P2.0 and P2.1) (MSP430F67xxIPZ Only) Input/Output With Schmitt Trigger

Figure 6-5 shows the port diagram. Table 6-61 and Table 6-62 summarize the selection of the pin functions.

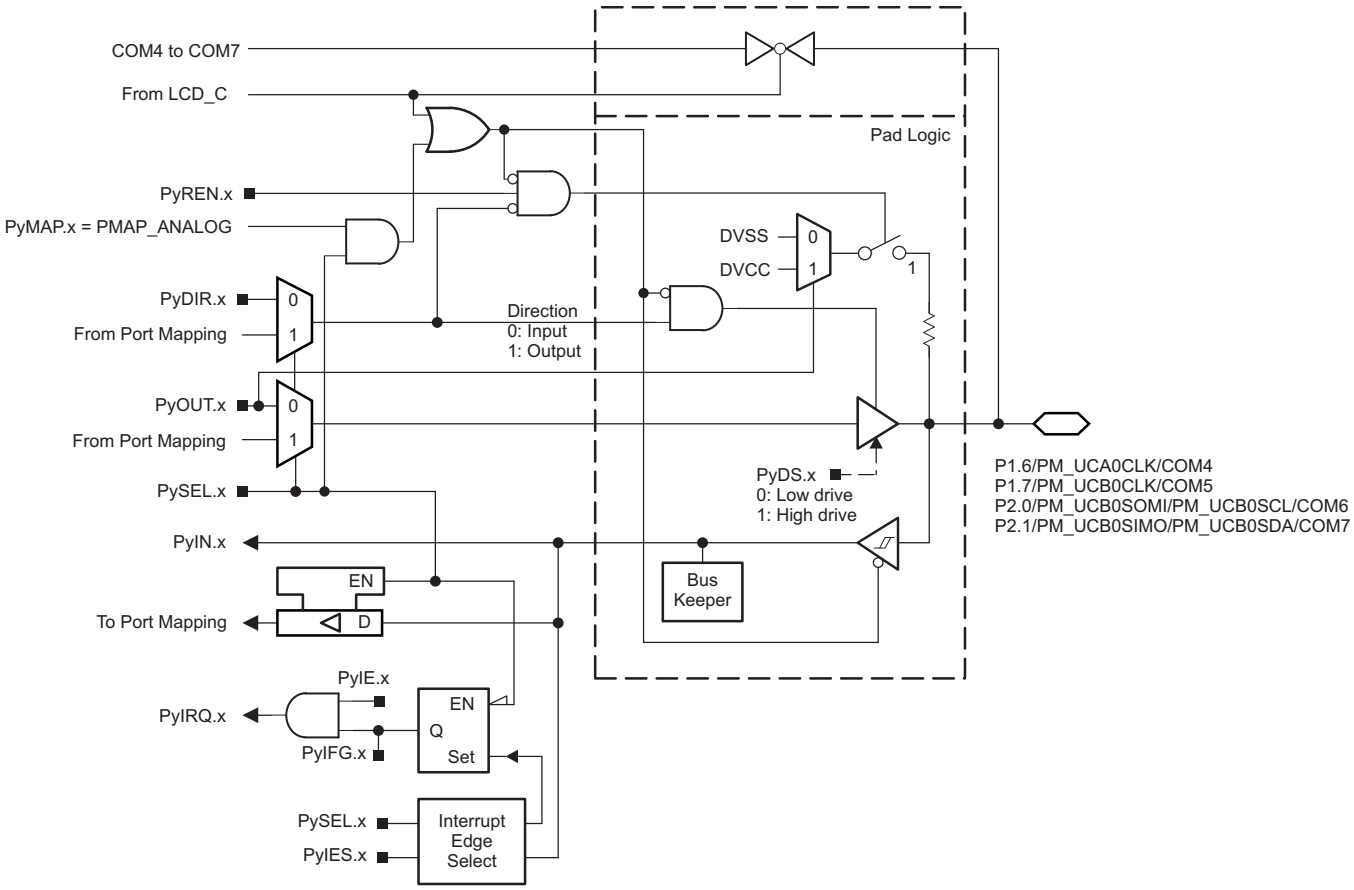

Figure 6-5. Port P1 (P1.6 and P1.7) (MSP430F67xxIPZ and MSP430F67xxIPN), Port P2 (P2.0 and P2.1) (MSP430F67xxIPZ Only) Diagram

Table 6-61. Port P1 (P1.6 and P1.7) Pin Functions (MSP430F67xxIPZ and MSP430F67xxIPN)

PIN NAME (P1.x)	x	FUNCTION	CONTROL BITS OR SIGNALS[1]			
			P1DIR.x	P1SEL.x	P1MAPx	COM4, COM5 Enable Signal
P1.6/PM_UCA0CLK/COM4	6	P1.6 (I/O)	I: 0; O: 1	0	X	0
		UCA0CLK	X	1	default	0
		Output driver and input Schmitt trigger disabled	X	1	= 31	0
		COM4	X	X	X	1
P1.7/PM_UCB0CLK/COM5	7	P1.7 (I/O)	I: 0; O: 1	0	X	0
		UCB0CLK	X	1	default	0
		Output driver and input Schmitt trigger disabled	X	1	= 31	0
		COM5	X	X	X	1

(1) X = Don't care

Table 6-62. Port P2 (P2.0 and P2.1) Pin Functions (MSP430F67xxIPZ Only)

PIN NAME (P2.x)	x	FUNCTION	CONTROL BITS OR SIGNALS[1]			
			P2DIR.x	P2SEL.x	P2MAPx	COM6, COM7 Enable Signal
P2.0/PM_UCB0SOMI/ PM_UCB0SCL/COM6	0	P2.0 (I/O)	I: 0; O: 1	0	X	0
		UCB0SOMI/UCB0SCL	X	1	default	0
		Output driver and input Schmitt trigger disabled	X	1	= 31	0
		COM6	X	X	X	1
P2.1/PM_UCB0SIMO/ PM_UCB0SDA/COM7	1	P2.1 (I/O)	I: 0; O: 1	0	X	0
		UCB0SIMO/UCB0SDA	X	1	default	0
		Output driver and input Schmitt trigger disabled	X	1	= 31	0
		COM7	X	X	X	1

(1) X = Don't care

Copyright © 2011–2018, Texas Instruments Incorporated

6.12.5 Port P2 (P2.2 to P2.7) Input/Output With Schmitt Trigger (MSP430F67xxIPZ Only)

Figure 6-6 shows the port diagram. Table 6-63 summarizes the selection of the pin functions.

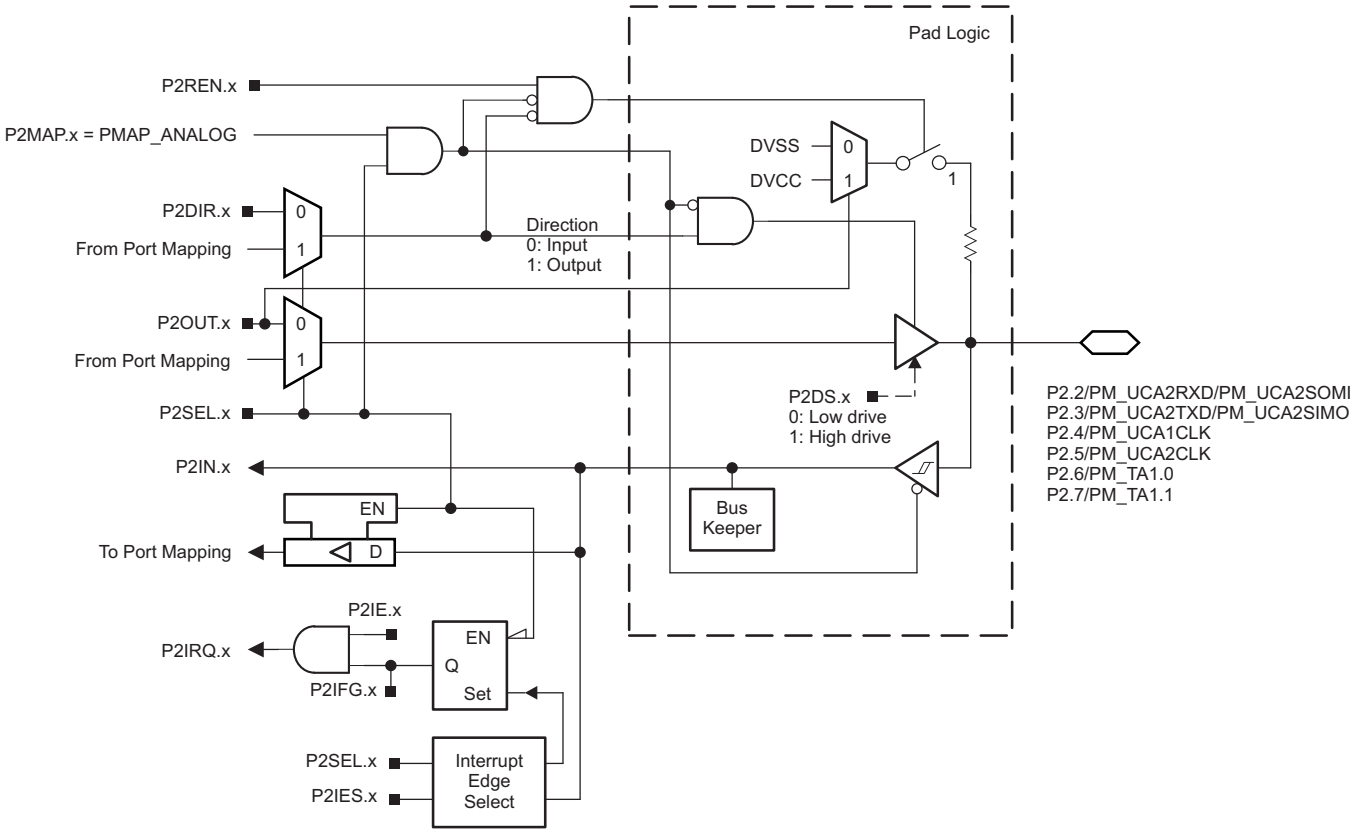

Figure 6-6. Port P2 (P2.2 to P2.7) Diagram (MSP430F67xxIPZ Only)

Table 6-63. Port P2 (P2.2 to P2.7) Pin Functions (MSP430F67xxIPZ Only)

PIN NAME (P2.x)	x	FUNCTION	CONTROL BITS OR SIGNALS[1]		
			P2DIR.x	P2SEL.x	P2MAPx
P2.2/PM_UCA2RXD/ PM_UCA2SOMI	2	P2.2 (I/O)	I: 0; O: 1	0	X
		UCA2RXD/UCA2SOMI	X	1	default
		Output driver and input Schmitt trigger disabled	X	1	= 31
P2.3/PM_UCA2TXD/ PM_UCA2SIMO	3	P2.3 (I/O)	I: 0; O: 1	0	X
		UCA2TXD/UCA2SIMO	X	1	default
		Output driver and input Schmitt trigger disabled	X	1	= 31
P2.4/PM_UCA1CLK	4	P2.4 (I/O)	I: 0; O: 1	0	X
		UCA1CLK	X	1	default
		Output driver and input Schmitt trigger disabled	X	1	= 31
P2.5/PM_UCA2CLK	5	P2.5 (I/O)	I: 0; O: 1	0	X
		UCA2CLK	X	1	default
		Output driver and input Schmitt trigger disabled	X	1	= 31
P2.6/PM_TA1.0	6	P2.6 (I/O)	I: 0; O: 1	0	X
		TA1.CC10A	0	1	default
		TA1.TA0	1	1	default
		Output driver and input Schmitt trigger disabled	X	1	= 31
P2.7/PM_TA1.1	7	P2.7 (I/O)	I: 0; O: 1	0	X
		TA1.CCI1A	0	1	default
		TA1.TA1	1	1	default
		Output driver and input Schmitt trigger disabled	X	1	= 31

(1) X = Don't care

Copyright © 2011–2018, Texas Instruments Incorporated

6.12.6 Port P3 (P3.0 to P3.3) Input/Output With Schmitt Trigger (MSP430F67xxIPZ Only)

Figure 6-7 shows the port diagram. Table 6-64 summarizes the selection of the pin functions.

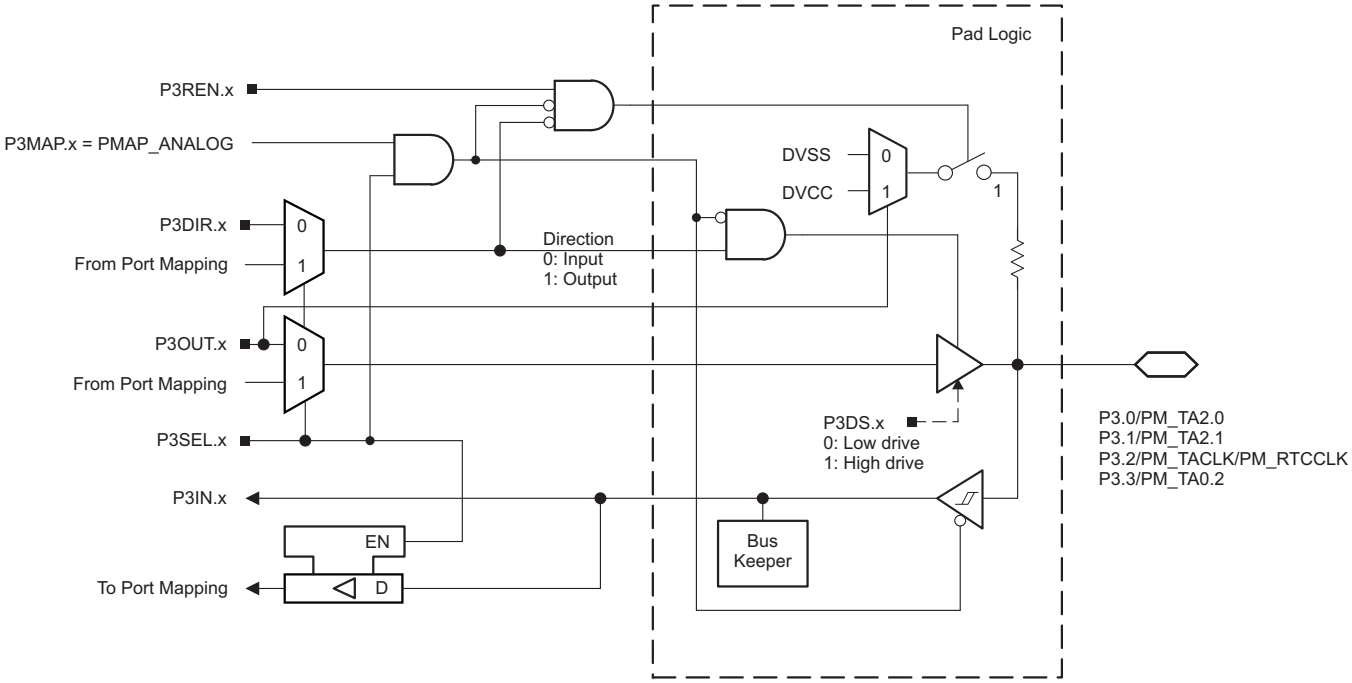

Figure 6-7. Port P3 (P3.0 to P3.3) Diagram (MSP430F67xxIPZ Only)

Table 6-64. Port P3 (P3.0 to P3.3) Pin Functions (MSP430F67xxIPZ Only)

PIN NAME (P3.x)	x	FUNCTION	CONTROL BITS OR SIGNALS(1)		
			P3DIR.x	P3SEL.x	P3MAPx
P3.0/PM_TA2.0	0	P3.0 (I/O)	I: 0; O: 1	0	X
		TA2.CC10A	0	1	default
		TA2.TA0	1	1	default
		Output driver and input Schmitt trigger disabled	X	1	= 31
P3.1/PM_TA2.1	1	P3.1 (I/O)	I: 0; O: 1	0	X
		TA2.CCI1A	0	1	default
		TA2.TA1	1	1	default
		Output driver and input Schmitt trigger disabled	X	1	= 31
P3.2/PM_TACLK/ PM_RTCCLK	2	P3.2 (I/O)	I: 0; O: 1	0	X
		TACLK	0	1	default
		RTCCLK	1	1	default
		Output driver and input Schmitt trigger disabled	X	1	= 31
P3.3/PM_TA0.2	3	P3.3 (I/O)	I: 0; O: 1	0	X
		TA0.CCI2A	0	1	default
		TA0.TA2	1	1	default
		Output driver and input Schmitt trigger disabled	X	1	= 31

(1) X = Don't care

6.12.7 Port P3 (P3.4 to P3.7) Input/Output With Schmitt Trigger (MSP430F67xxIPZ Only)

Figure 6-8 shows the port diagram. Table 6-65 summarizes the selection of the pin functions.

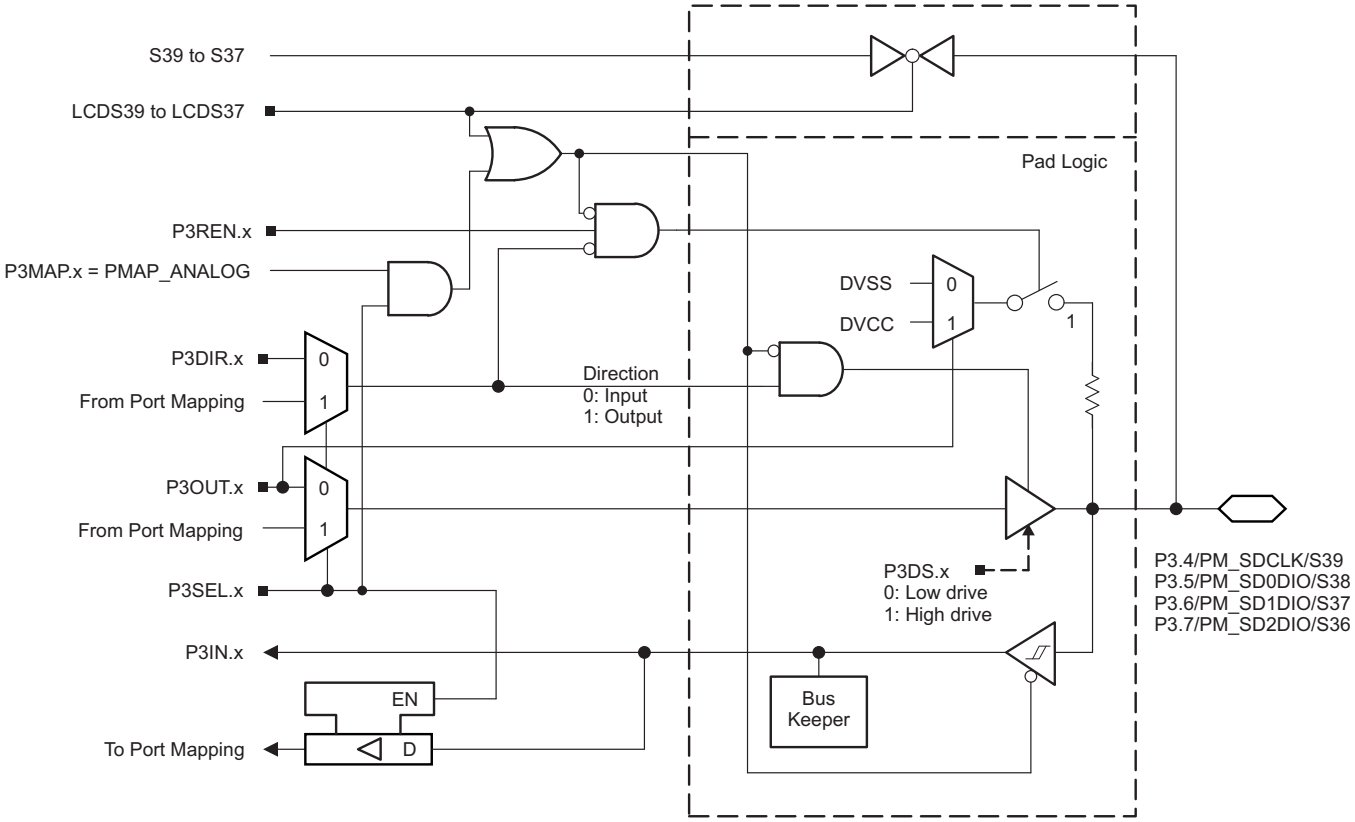

Figure 6-8. Port P3 (P3.4 to P3.7) Diagram (MSP430F67xxIPZ Only)

Copyright © 2011–2018, Texas Instruments Incorporated

Table 6-65. Port P3 (P3.4 to P3.7) Pin Functions (MSP430F67xxIPZ Only)

PIN NAME (P3.x)	x	FUNCTION	CONTROL BITS OR SIGNALS[1]			
			P3DIR.x	P3SEL.x	P3MAPx	LCDS39... LCDS36
P3.4/PM_SDCLK/S39	4	P3.4 (I/O)	I: 0; O: 1	0	X	0
		SDCLK	X	1	default	0
		Output driver and input Schmitt trigger disabled	X	1	= 31	0
		S39	X	X	X	1
P3.5/PM_SD0DIO/S38	5	P3.5 (I/O)	I: 0; O: 1	0	X	0
		SD0DIO	X	1	default	0
		Output driver and input Schmitt trigger disabled	X	1	= 31	0
		S38	X	X	X	1
P3.6/PM_SD1DIO/S37	6	P3.6 (I/O)	I: 0; O: 1	0	X	0
		SD1DIO	X	1	default	0
		Output driver and input Schmitt trigger disabled	X	1	= 31	0
		S37	X	X	X	1
P3.7/PM_SD2DIO/S36	7	P3.7 (I/O)	I: 0; O: 1	0	X	0
		SD2DIO	X	1	default	0
		Output driver and input Schmitt trigger disabled	X	1	= 31	0
		S36	X	X	X	1

(1) X = Don't care

6.12.8 Port P4 (P4.0 to P4.7), Port P5 (P5.0 to P5.7), Port P6 (P6.0 to P6.7), Port P7 (P7.0 to P7.7), Port P8 (P8.0 to P8.3) Input/Output With Schmitt Trigger (MSP430F67xxIPZ Only)

Figure 6-9 shows the port diagram. Table 6-66 through Table 6-70 summarize the selection of the pin functions.

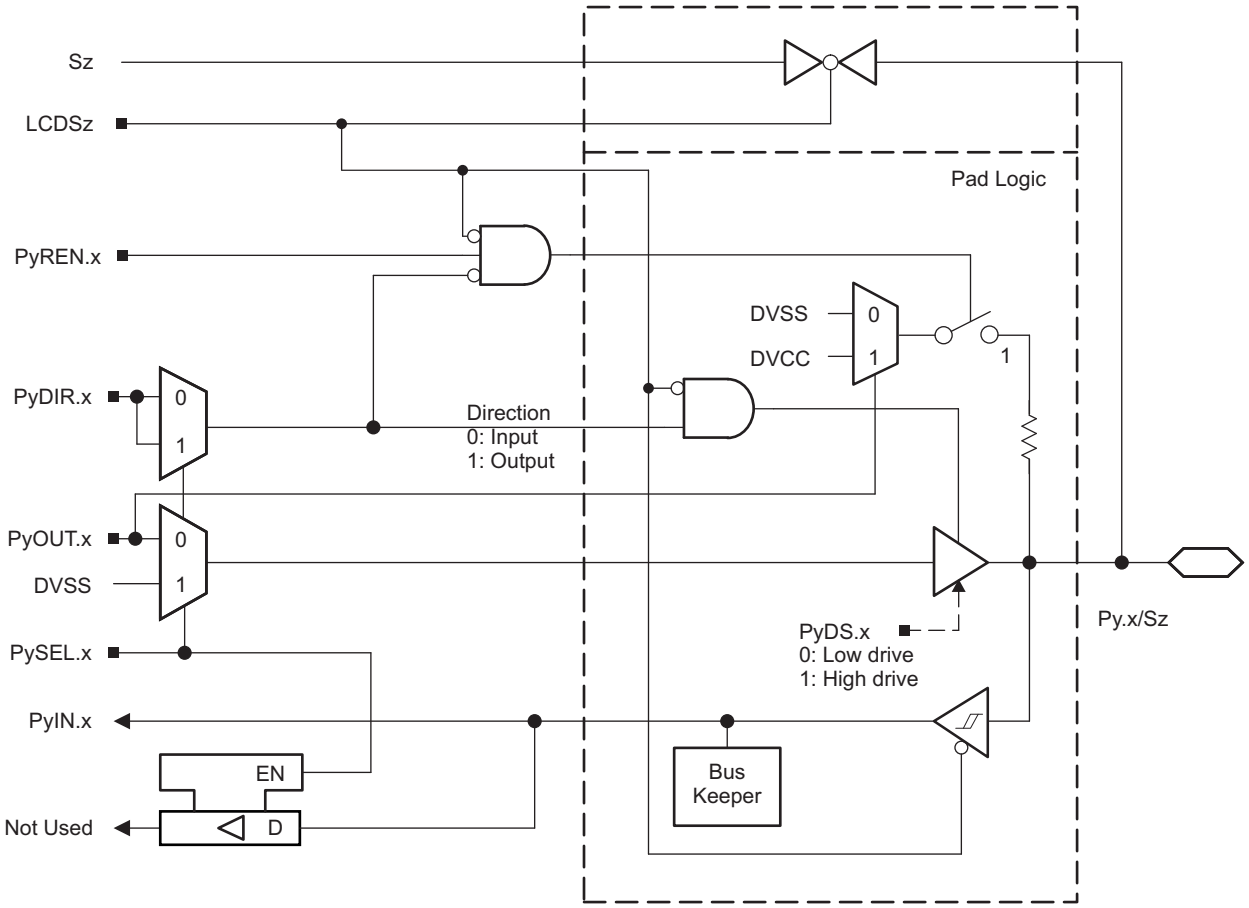

Figure 6-9. Port P4 (P4.0 to P4.7), Port P5 (P5.0 to P5.7), Port P6 (P6.0 to P6.7), Port P7 (P7.0 to P7.7), Port P8 (P8.0 to P8.3) Diagram (MSP430F67xxIPZ Only)

Copyright © 2011–2018, Texas Instruments Incorporated

Table 6-66. Port P4 (P4.0 to P4.7) Pin Functions (MSP430F67xxIPZ Only)

PIN NAME (P4.x)	x	FUNCTION	CONTROL BITS OR SIGNALS(1)		
			P4DIR.x	P4SEL.x	LCDS35... LCDS28
P4.0/S35	0	P4.0 (I/O)	I: 0; O: 1	0	0
		N/A	0	1	0
		DVSS	1	1	0
		S35	X	X	1
P4.1/S34	1	P4.1 (I/O)	I: 0; O: 1	0	0
		N/A	0	1	0
		DVSS	1	1	0
		S34	X	X	1
P4.2/S33	2	P4.2 (I/O)	I: 0; O: 1	0	0
		N/A	0	1	0
		DVSS	1	1	0
		S33	X	X	1
P4.3/S32	3	P4.3 (I/O)	I: 0; O: 1	0	0
		N/A	0	1	0
		DVSS	1	1	0
		S32	X	X	1
P4.4/S31	4	P4.4 (I/O)	I: 0; O: 1	0	0
		N/A	0	1	0
		DVSS	1	1	0
		S31	X	X	1
P4.5/S30	5	P4.5 (I/O)	I: 0; O: 1	0	0
		N/A	0	1	0
		DVSS	1	1	0
		S30	X	X	1
P4.6/S29	6	P4.6 (I/O)	I: 0; O: 1	0	0
		N/A	0	1	0
		DVSS	1	1	0
		S29	X	X	1
P4.7/S28	7	P4.7 (I/O)	I: 0; O: 1	0	0
		N/A	0	1	0
		DVSS	1	1	0
		S28	X	X	1

(1) X = Don't care

Copyright © 2011–2018, Texas Instruments Incorporated

Table 6-67. Port P5 (P5.0 to P5.7) Pin Functions (MSP430F67xxIPZ Only)

PIN NAME (P5.x)	x	FUNCTION	CONTROL BITS OR SIGNALS[1]		
			P5DIR.x	P5SEL.x	LCDS27... LCDS20
P5.0/S27	0	P5.0 (I/O)	I: 0; O: 1	0	0
		N/A	0	1	0
		DVSS	1	1	0
		S27	X	X	1
P5.1/S26	1	P5.1 (I/O)	I: 0; O: 1	0	0
		N/A	0	1	0
		DVSS	1	1	0
		S26	X	X	1
P5.2/S25	2	P5.2 (I/O)	I: 0; O: 1	0	0
		N/A	0	1	0
		DVSS	1	1	0
		S25	X	X	1
P5.3/S24	3	P5.3 (I/O)	I: 0; O: 1	0	0
		N/A	0	1	0
		DVSS	1	1	0
		S24	X	X	1
P5.4/S23	4	P5.4 (I/O)	I: 0; O: 1	0	0
		N/A	0	1	0
		DVSS	1	1	0
		S23	X	X	1
P5.5/S22	5	P5.5 (I/O)	I: 0; O: 1	0	0
		N/A	0	1	0
		DVSS	1	1	0
		S22	X	X	1
P5.6/S21	6	P5.6 (I/O)	I: 0; O: 1	0	0
		N/A	0	1	0
		DVSS	1	1	0
		S21	X	X	1
P5.7/S20	7	P5.7 (I/O)	I: 0; O: 1	0	0
		N/A	0	1	0
		DVSS	1	1	0
		S20	X	X	1

(1) X = Don't care

Copyright © 2011–2018, Texas Instruments Incorporated

Table 6-68. Port P6 (P6.0 to P6.7) Pin Functions (MSP430F67xxIPZ Only)

PIN NAME (P6.x)	x	FUNCTION	CONTROL BITS OR SIGNALS(1)		
			P6DIR.x	P6SEL.x	LCDS19... LCDS12
P6.0/S19	0	P6.0 (I/O)	I: 0; O: 1	0	0
		N/A	0	1	0
		DVSS	1	1	0
		S19	X	X	1
P6.1/S18	1	P6.1 (I/O)	I: 0; O: 1	0	0
		N/A	0	1	0
		DVSS	1	1	0
		S18	X	X	1
P6.2/S17	2	P6.2 (I/O)	I: 0; O: 1	0	0
		N/A	0	1	0
		DVSS	1	1	0
		S17	X	X	1
P6.3/S16	3	P6.3 (I/O)	I: 0; O: 1	0	0
		N/A	0	1	0
		DVSS	1	1	0
		S16	X	X	1
P6.4/S15	4	P6.4 (I/O)	I: 0; O: 1	0	0
		N/A	0	1	0
		DVSS	1	1	0
		S15	X	X	1
P6.5/S14	5	P6.5 (I/O)	I: 0; O: 1	0	0
		N/A	0	1	0
		DVSS	1	1	0
		S14	X	X	1
P6.6/S13	6	P6.6 (I/O)	I: 0; O: 1	0	0
		N/A	0	1	0
		DVSS	1	1	0
		S13	X	X	1
P6.7/S12	7	P6.7 (I/O)	I: 0; O: 1	0	0
		N/A	0	1	0
		DVSS	1	1	0
		S12	X	X	1

(1) X = Don't care

Table 6-69. Port P7 (P7.0 to P7.7) Pin Functions (MSP430F67xxIPZ Only)

PIN NAME (P7.x)	x	FUNCTION	CONTROL BITS OR SIGNALS[1]		
			P7DIR.x	P7SEL.x	LCDS11... LCDS4
P7.0/S11	0	P7.0 (I/O)	I: 0; O: 1	0	0
		N/A	0	1	0
		DVSS	1	1	0
		S11	X	X	1
P7.1/S10	1	P7.1 (I/O)	I: 0; O: 1	0	0
		N/A	0	1	0
		DVSS	1	1	0
		S10	X	X	1
P7.2/S9	2	P7.2 (I/O)	I: 0; O: 1	0	0
		N/A	0	1	0
		DVSS	1	1	0
		S9	X	X	1
P7.3/S8	3	P7.3 (I/O)	I: 0; O: 1	0	0
		N/A	0	1	0
		DVSS	1	1	0
		S8	X	X	1
P7.4/S7	4	P7.4 (I/O)	I: 0; O: 1	0	0
		N/A	0	1	0
		DVSS	1	1	0
		S7	X	X	1
P7.5/S6	5	P7.5 (I/O)	I: 0; O: 1	0	0
		N/A	0	1	0
		DVSS	1	1	0
		S6	X	X	1
P7.6/S5	6	P7.6 (I/O)	I: 0; O: 1	0	0
		N/A	0	1	0
		DVSS	1	1	0
		S5	X	X	1
P7.7/S4	7	P7.7 (I/O)	I: 0; O: 1	0	0
		N/A	0	1	0
		DVSS	1	1	0
		S4	X	X	1

(1) X = Don't care

Copyright © 2011–2018, Texas Instruments Incorporated

Table 6-70. Port P8 (P8.0 to P8.3) Pin Functions (MSP430F67xxIPZ Only)

PIN NAME (P8.x)	x	FUNCTION	CONTROL BITS OR SIGNALS(1)		
			P8DIR.x	P8SEL.x	LCDS3... LCDS0
P8.0/S3	0	P8.0 (I/O)	I: 0; O: 1	0	0
		N/A	0	1	0
		DVSS	1	1	0
		S3	X	X	1
P8.1/S2	1	P8.1 (I/O)	I: 0; O: 1	0	0
		N/A	0	1	0
		DVSS	1	1	0
		S2	X	X	1
P8.2/S1	2	P8.2 (I/O)	I: 0; O: 1	0	0
		N/A	0	1	0
		DVSS	1	1	0
		S1	X	X	1
P8.3/S0	3	P8.3 (I/O)	I: 0; O: 1	0	0
		N/A	0	1	0
		DVSS	1	1	0
		S0	X	X	1

(1) X = Don't care

6.12.9 Port P8 (P8.4 to P8.7) Input/Output With Schmitt Trigger (MSP430F67xxIPZ Only)

Figure 6-10 shows the port diagram. Table 6-71 summarizes the selection of the pin functions.

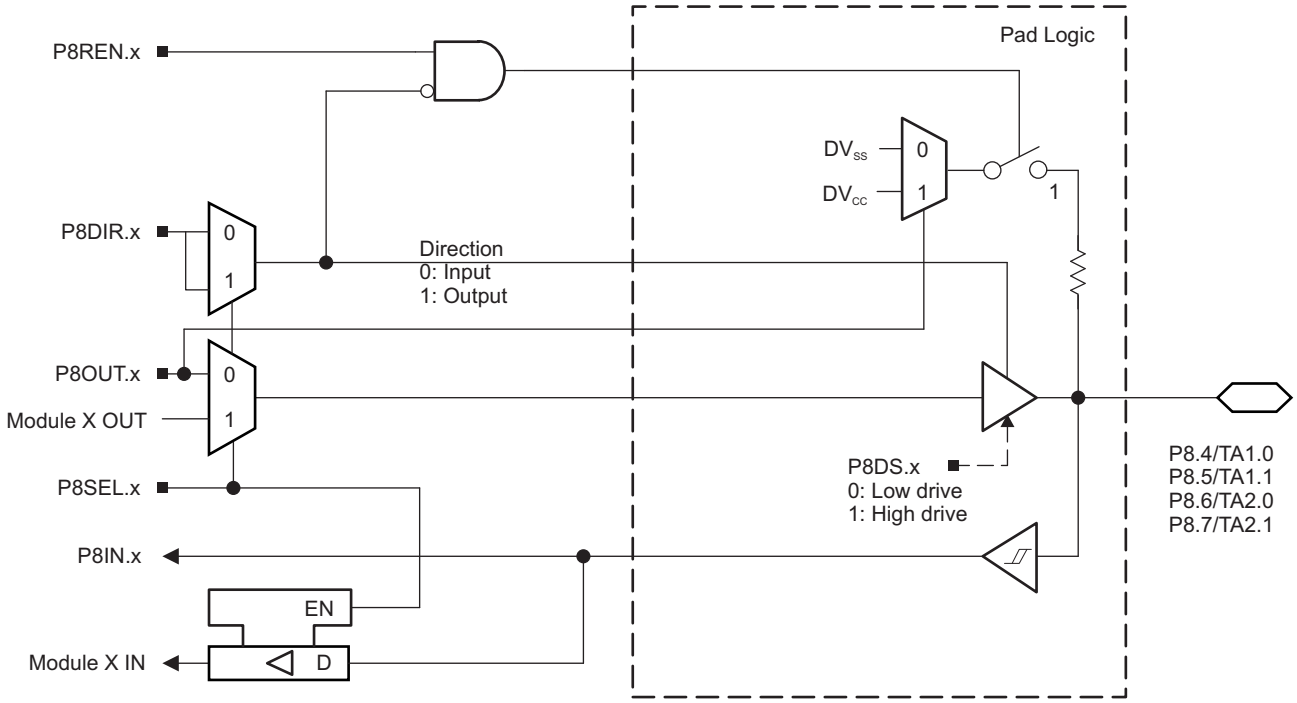

Figure 6-10. Port P8 (P8.4 to P8.7) Diagram (MSP430F67xxIPZ Only)

Table 6-71. Port P8 (P8.4 to P8.7) Pin Functions (MSP430F67xxIPZ Only)

PIN NAME (P8.x)	x	FUNCTION	CONTROL BITS OR SIGNALS	
			P8DIR.x	P8SEL.x
P8.4/TA1.0	4	P8.4 (I/O)	I: 0; O: 1	0
		TA1.CCI0A	0	1
		TA1.TA0	1	1
P8.5/TA1.1	5	P8.5 (I/O)	I: 0; O: 1	0
		TA1.CCI1A	0	1
		TA1.TA1	1	1
P8.6/TA2.0	6	P8.6 (I/O)	I: 0; O: 1	0
		TA2.CCI0A	0	1
		TA2.TA0	1	1
P8.7/TA2.1	7	P8.7 (I/O)	I: 0; O: 1	0
		TA2.CCI1A	0	1
		TA2.TA1	1	1

Copyright © 2011–2018, Texas Instruments Incorporated

6.12.10 Port P9 (P9.0) Input/Output With Schmitt Trigger (MSP430F67xxIPZ Only)

Figure 6-11 shows the port diagram. Table 6-72 summarizes the selection of the pin functions.

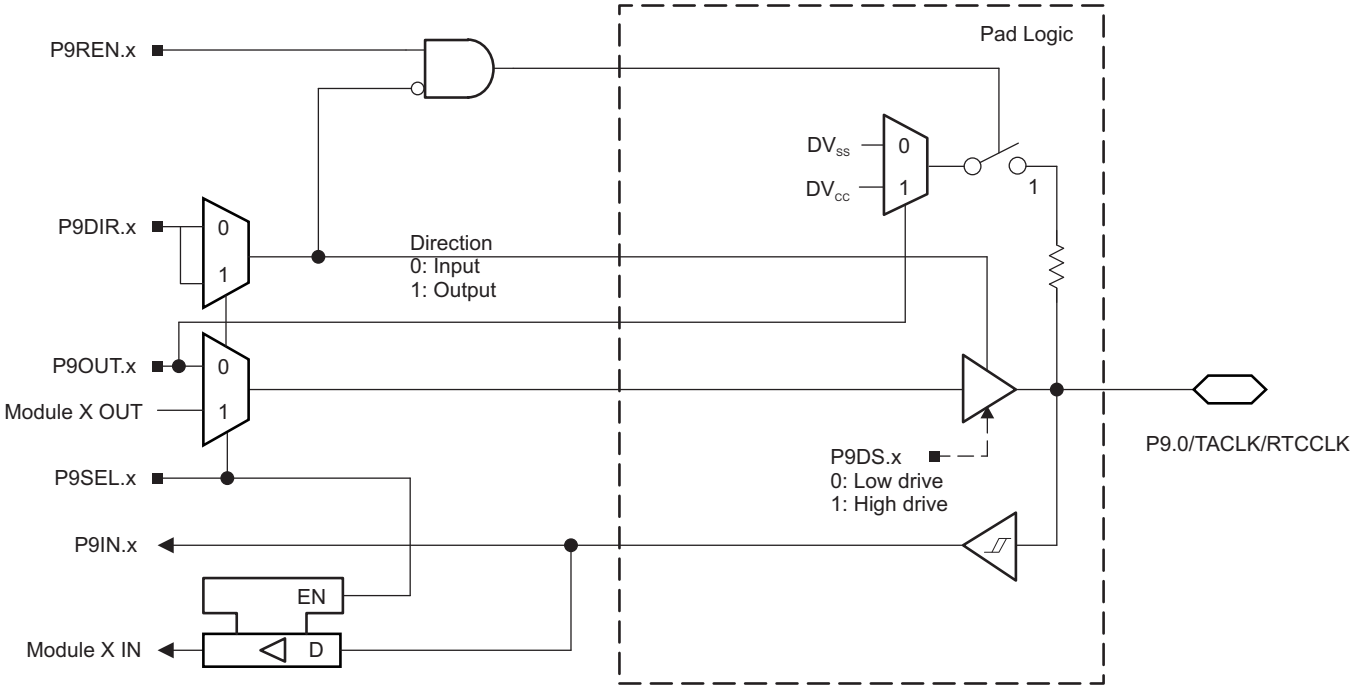

Figure 6-11. Port P9 (P9.0) Diagram (MSP430F67xxIPZ Only)

Table 6-72. Port P9 (P9.0) Pin Functions (MSP430F67xxIPZ Only)

PIN NAME (P9.x)	x	FUNCTION	CONTROL BITS OR SIGNALS	
			P9DIR.x	P9SEL.x
P9.0/TACLK/RTCCLK	0	P9.0 (I/O)	I: 0; O: 1	0
		TACLK	0	1
		RTCCLK	1	1

6.12.11 Port P9 (P9.1 to P9.3) Input/Output With Schmitt Trigger (MSP430F67xxIPZ Only)

Figure 6-12 shows the port diagram. Table 6-73 summarizes the selection of the pin functions.

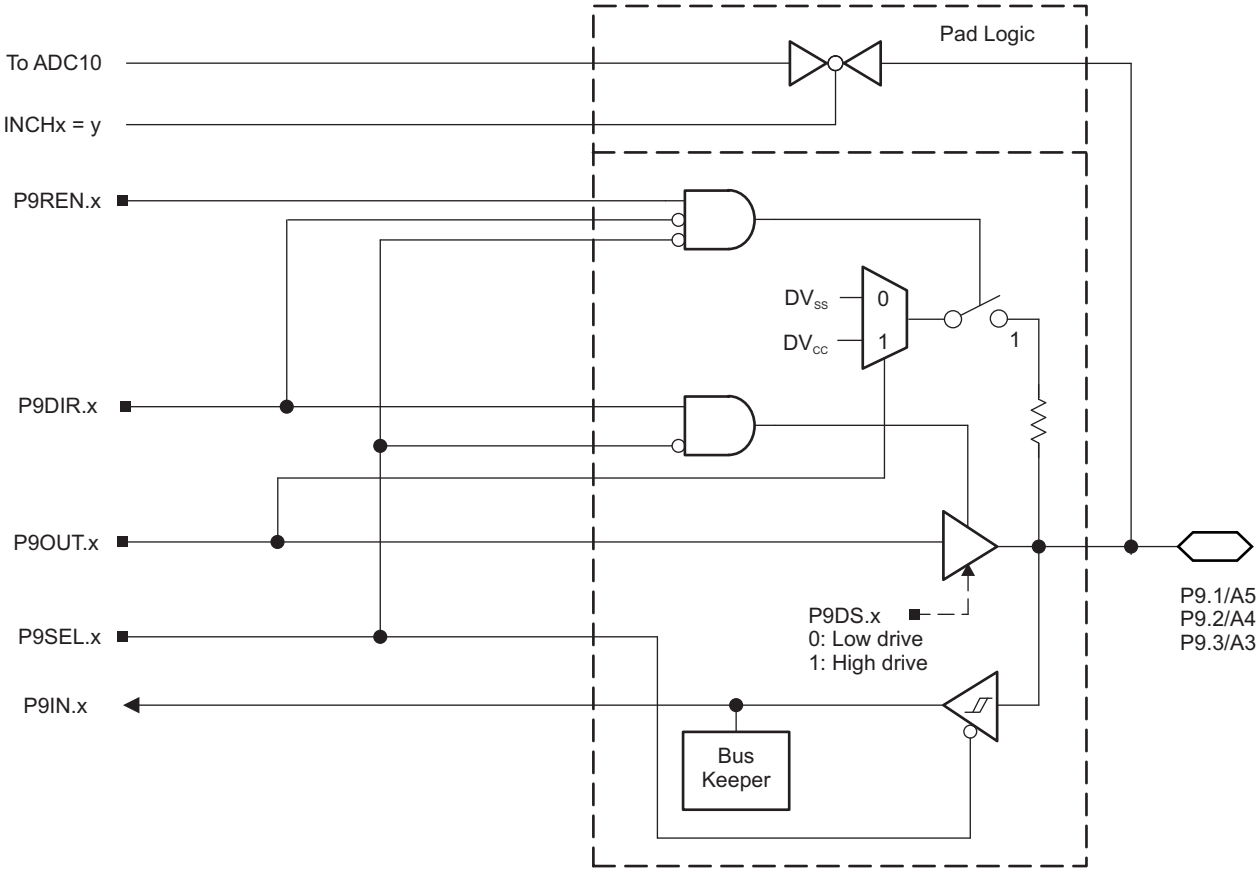

Figure 6-12. Port P9 (P9.1 to P9.3) Diagram (MSP430F67xxIPZ Only)

Table 6-73. Port P9 (P9.1 to P9.3) Pin Functions (MSP430F67xxIPZ Only)

PIN NAME (P9.x)	x	FUNCTION	CONTROL BITS OR SIGNALS[1]	
			P9DIR.x	P9SEL.x
P9.1/A5	1	P9.1 (I/O)	I: 0; O: 1	0
		A5[2]	X	1
P9.2/A4	2	P9.2 (I/O)	I: 0; O: 1	0
		A4[2]	X	1
P9.3/A3	3	P9.3 (I/O)	I: 0; O: 1	0
		A3[2]	X	1

(1) X = Don't care
(2) Setting P9SEL.x bit disables the output driver and the input Schmitt trigger.

Copyright © 2011–2018, Texas Instruments Incorporated

6.12.12 Port P2 (P2.0 and P2.1) Input/Output With Schmitt Trigger (MSP430F67xxIPN Only)

Figure 6-13 shows the port diagram. Table 6-74 summarizes the selection of the pin functions.

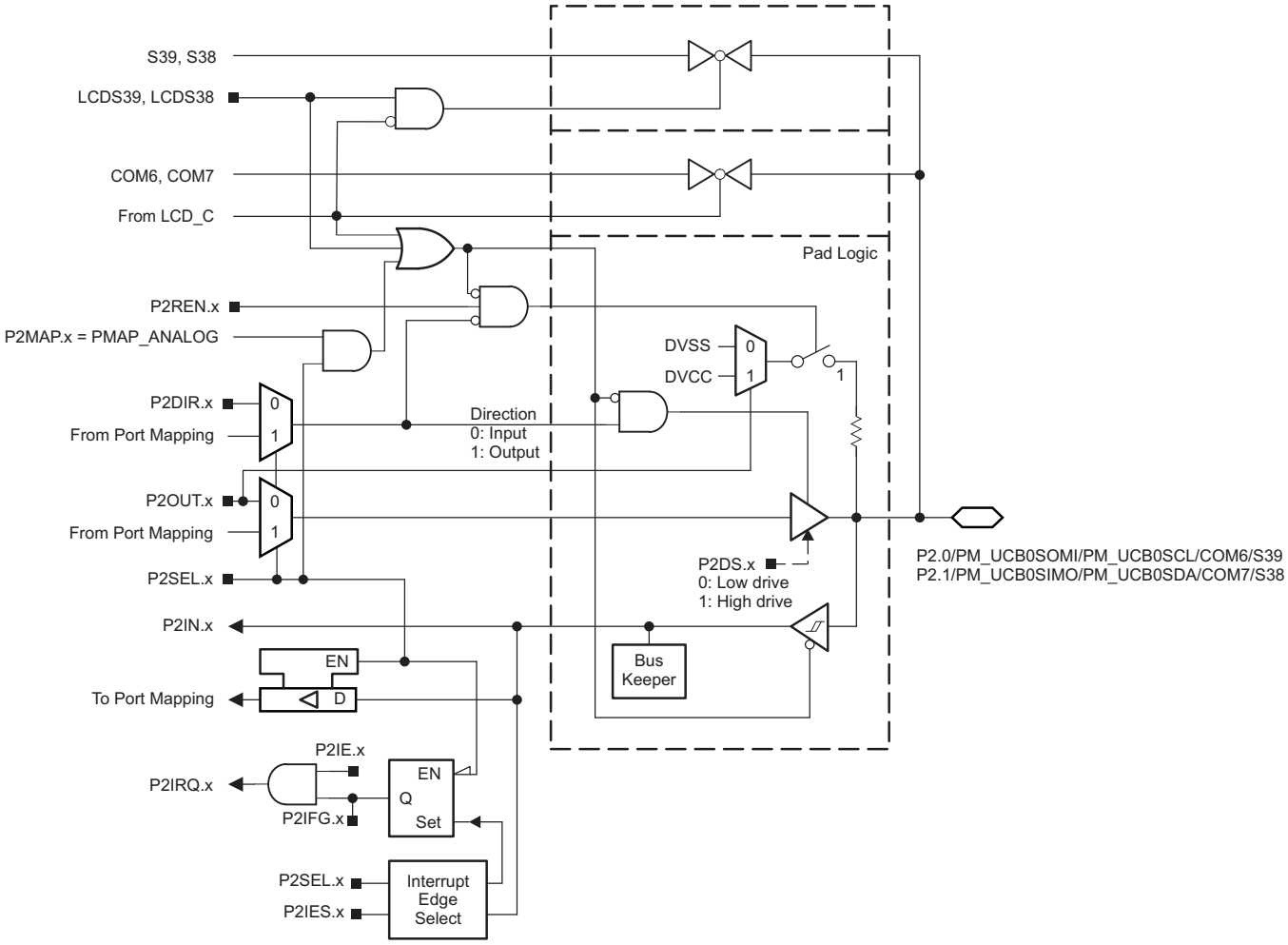

Figure 6-13. Port P2 (P2.0 and P2.1) Diagram (MSP430F67xxIPN Only)

Table 6-74. Port P2 (P2.0 and P2.1) Pin Functions (MSP430F67xxIPN Only)

PIN NAME (P2.x)	x	FUNCTION	CONTROL BITS OR SIGNALS[1]				
			P2DIR.x	P2SEL.x	P2MAPx	LCDS39, LCDS38	COM6, COM7 Enable Signal
P2.0/PM_UCB0SOMI/ PM_UCB0SCL/COM6/ S39	0	P2.0 (I/O)	I: 0; O: 1	0	X	0	0
		UCB0SOMI/UCB0SCL	X	1	default	0	0
		Output driver and input Schmitt trigger disabled	X	1	= 31	0	0
		COM6	X	X	X	X	1
		S39	X	X	X	1	0
P2.1/PM_UCB0SIMO/ PM_UCB0SDA/COM7/ S38	1	P2.1 (I/O)	I: 0; O: 1	0	X	0	0
		UCB0SIMO/UCB0SDA	X	1	default	0	0
		Output driver and input Schmitt trigger disabled	X	1	= 31	0	0
		COM7	X	X	X	X	1
		S38	X	X	X	1	0

(1) X = Don't care

Copyright © 2011–2018, Texas Instruments Incorporated

6.12.13 Port P2 (P2.2 to P2.7) Input/Output With Schmitt Trigger (MSP430F67xxIPN Only)

Figure 6-14 shows the port diagram. Table 6-75 summarizes the selection of the pin functions.

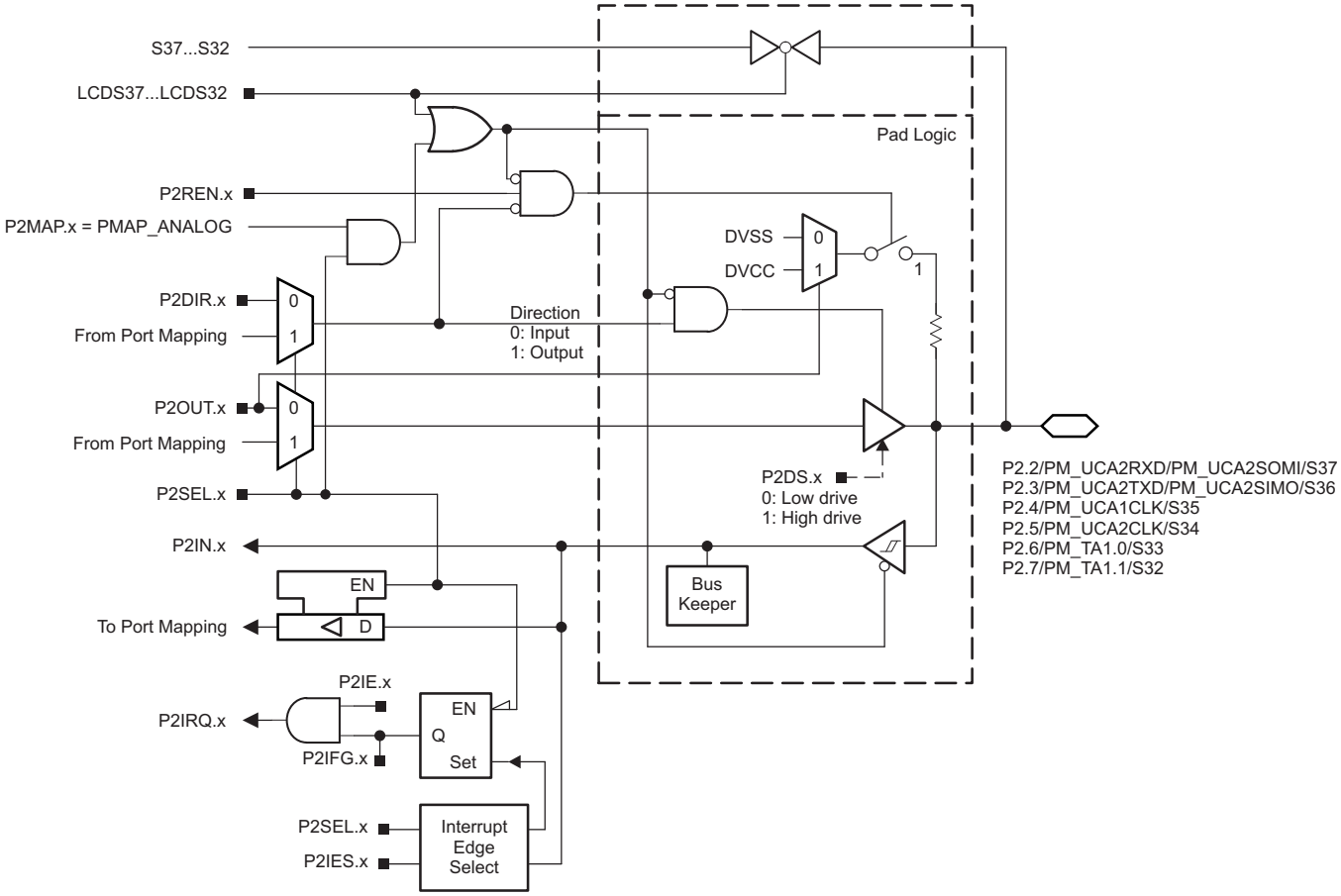

Figure 6-14. Port P2 (P2.2 to P2.7) Diagram (MSP430F67xxIPN Only)

Table 6-75. Port P2 (P2.2 to P2.7) Pin Functions (MSP430F67xxIPN Only)

PIN NAME (P2.x)	x	FUNCTION	CONTROL BITS OR SIGNALS[1]			
			P2DIR.x	P2SEL.x	P2MAPx	LCDS37... LCDS32
P2.2/PM_UCA2RXD/ PM_UCA2SOMI/S37	2	P2.2 (I/O)	I: 0; O: 1	0	X	0
		UCA2RXD/UCA2SOMI	X	1	default	0
		Output driver and input Schmitt trigger disabled	X	1	= 31	0
		S37	X	X	X	1
P2.3/PM_UCA2TXD/ PM_UCA2SIMO/S36	3	P2.3 (I/O)	I: 0; O: 1	0	X	0
		UCA2TXD/UCA2SIMO	X	1	default	0
		Output driver and input Schmitt trigger disabled	X	1	= 31	0
		S36	X	X	X	1
P2.4/PM_UCA1CLK/S35	4	P2.4 (I/O)	I: 0; O: 1	0	X	0
		UCA1CLK	X	1	default	0
		Output driver and input Schmitt trigger disabled	X	1	= 31	0
		S35	X	X	X	1
P2.5/PM_UCA2CLK/S34	5	P2.5 (I/O)	I: 0; O: 1	0	X	0
		UCA2CLK	X	1	default	0
		Output driver and input Schmitt trigger disabled	X	1	= 31	0
		S34	X	X	X	1
P2.6/PM_TA1.0/S33	6	P2.6 (I/O)	I: 0; O: 1	0	X	0
		TA1.CCI0A	0	1	default	0
		TA1.TA0	1	1	default	0
		Output driver and input Schmitt trigger disabled	X	1	= 31	0
		S33	X	X	X	1
P2.7/PM_TA1.1/S32	7	P2.7 (I/O)	I: 0; O: 1	0	X	0
		TA1.CCI1A	0	1	default	0
		TA1.TA1	1	1	default	0
		Output driver and input Schmitt trigger disabled	X	1	= 31	0
		S32	X	X	X	1

(1) X = Don't care

Copyright © 2011–2018, Texas Instruments Incorporated

6.12.14 Port P3 (P3.0 to P3.7) Input/Output With Schmitt Trigger (MSP430F67xxIPN Only)

Figure 6-15 shows the port diagram. Table 6-76 summarizes the selection of the pin functions.

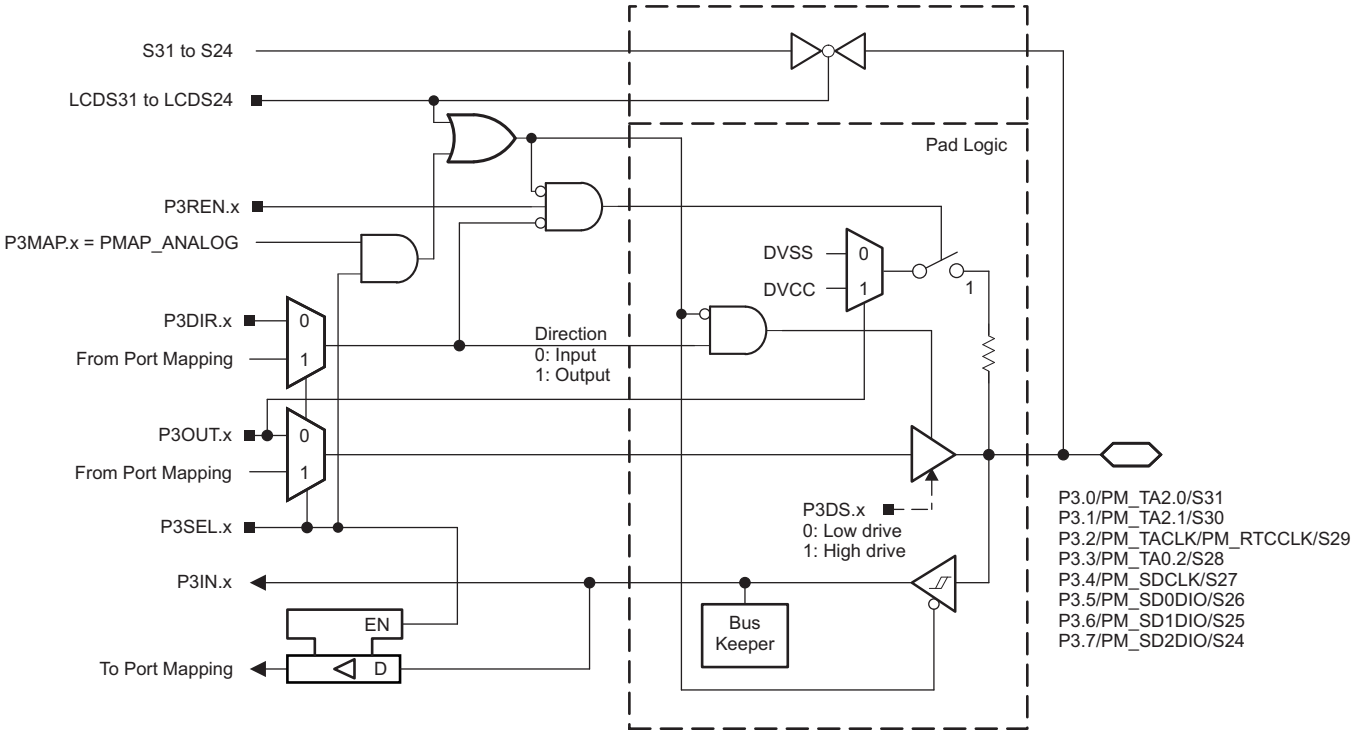

Figure 6-15. Port P3 (P3.0 to P3.7) Diagram (MSP430F67xxIPN Only)

Table 6-76. Port P3 (P3.0 to P3.7) Pin Functions (MSP430F67xxIPN Only)

PIN NAME (P3.x)	x	FUNCTION	CONTROL BITS OR SIGNALS[1]			
			P3DIR.x	P3SEL.x	P3MAPx	LCDS31... LCDS24
P3.0/PM_TA2.0/S31	0	P3.0 (I/O)	I: 0; O: 1	0	X	0
		TA2.CCI0A	0	1	default	0
		TA2.TA0	1	1	default	0
		Output driver and input Schmitt trigger disabled	X	1	= 31	0
		S31	X	X	X	1
P3.1/PM_TA2.1/S30	1	P3.1 (I/O)	I: 0; O: 1	0	X	0
		TA2.CCI1A	0	1	default	0
		TA2.TA1	1	1	default	0
		Output driver and input Schmitt trigger disabled	X	1	= 31	0
		S30	X	X	X	1
P3.2/PM_TACLK/ PM_RTCCLK/S29	2	P3.2 (I/O)	I: 0; O: 1	0	X	0
		TACLK	0	1	default	0
		RTCCLK	1	1	default	0
		Output driver and input Schmitt trigger disabled	X	1	= 31	0
		S29	X	X	X	1
P3.3/PM_TA0.2/S28	3	P3.3 (I/O)	I: 0; O: 1	0	X	0
		TA0.CCI2A	0	1	default	0
		TA0.TA2	1	1	default	0
		Output driver and input Schmitt trigger disabled	X	1	= 31	0
		S28	X	X	X	1
P3.4/PM_SDCLK/S27	4	P3.4 (I/O)	I: 0; O: 1	0	X	0
		SDCLK	X	1	default	0
		Output driver and input Schmitt trigger disabled	X	1	= 31	0
		S27	X	X	X	1
P3.5/PM_SD0DIO/S26	5	P3.5 (I/O)	I: 0; O: 1	0	X	0
		SD0DIO	X	1	default	0
		Output driver and input Schmitt trigger disabled	X	1	= 31	0
		S26	X	X	X	1
P3.6/PM_SD1DIO/S25	6	P3.6 (I/O)	I: 0; O: 1	0	X	0
		SD1DIO	X	1	default	0
		Output driver and input Schmitt trigger disabled	X	1	= 31	0
		S25	X	X	X	1
P3.7/PM_SD2DIO/S24	7	P3.7 (I/O)	I: 0; O: 1	0	X	0
		SD2DIO	X	1	default	0
		Output driver and input Schmitt trigger disabled	X	1	= 31	0
		S24	X	X	X	1

(1) X = Don't care

Copyright © 2011–2018, Texas Instruments Incorporated

6.12.15 Port P4 (P4.0 to P4.7), Port P5 (P5.0 to P5.7), Port P6 (P6.0 to P6.7) Input/Output With Schmitt Trigger (MSP430F67xxIPN Only)

Figure 6-16 shows the port diagram. Table 6-77 through Table 6-79 summarize the selection of the pin functions.

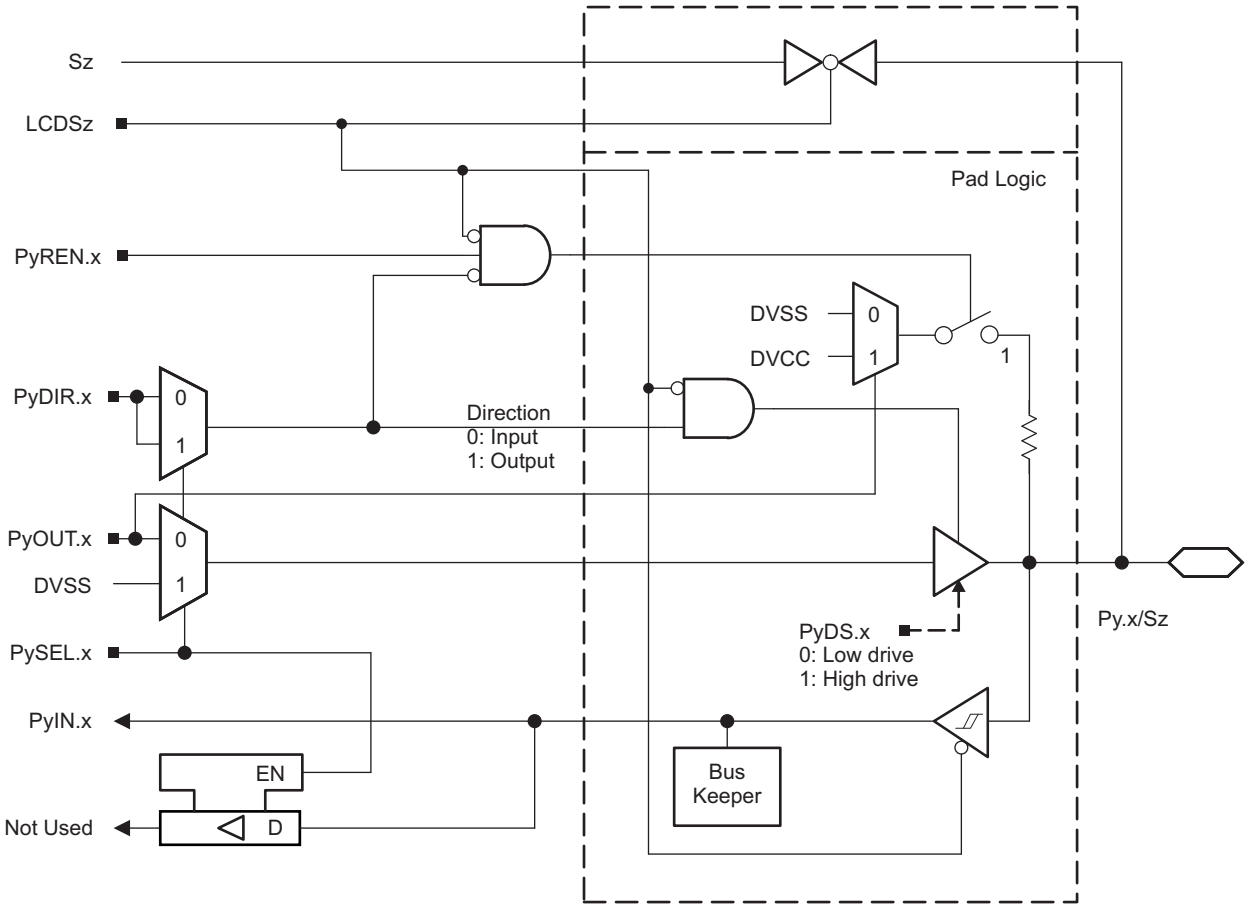

Figure 6-16. Port P4 (P4.0 to P4.7), Port P5 (P5.0 to P5.7), Port P6 (P6.0 to P6.7) Diagram (MSP430F67xxIPN Only)

Table 6-77. Port P4 (P4.0 to P4.7) Pin Functions (MSP430F67xxIPN Only)

PIN NAME (P4.x)	x	FUNCTION	CONTROL BITS OR SIGNALS[1]		
			P4DIR.x	P4SEL.x	LCDS23... LCDS16
P4.0/S23	0	P4.0 (I/O)	I: 0; O: 1	0	0
		N/A	0	1	0
		DVSS	1	1	0
		S23	X	X	1
P4.1/S22	1	P4.1 (I/O)	I: 0; O: 1	0	0
		N/A	0	1	0
		DVSS	1	1	0
		S22	X	X	1
P4.2/S21	2	P4.2 (I/O)	I: 0; O: 1	0	0
		N/A	0	1	0
		DVSS	1	1	0
		S21	X	X	1
P4.3/S20	3	P4.3 (I/O)	I: 0; O: 1	0	0
		N/A	0	1	0
		DVSS	1	1	0
		S20	X	X	1
P4.4/S19	4	P4.4 (I/O)	I: 0; O: 1	0	0
		N/A	0	1	0
		DVSS	1	1	0
		S19	X	X	1
P4.5/S18	5	P4.5 (I/O)	I: 0; O: 1	0	0
		N/A	0	1	0
		DVSS	1	1	0
		S18	X	X	1
P4.6/S17	6	P4.6 (I/O)	I: 0; O: 1	0	0
		N/A	0	1	0
		DVSS	1	1	0
		S17	X	X	1
P4.7/S16	7	P4.7 (I/O)	I: 0; O: 1	0	0
		N/A	0	1	0
		DVSS	1	1	0
		S16	X	X	1

(1) X = Don't care

Copyright © 2011–2018, Texas Instruments Incorporated

Table 6-78. Port P5 (P5.0 to P5.7) Pin Functions (MSP430F67xxIPN Only)

PIN NAME (P5.x)	x	FUNCTION	CONTROL BITS OR SIGNALS(1)		
			P5DIR.x	P5SEL.x	LCDS15... LCDS8
P5.0/S15	0	P5.0 (I/O)	I: 0; O: 1	0	0
		N/A	0	1	0
		DVSS	1	1	0
		S15	X	X	1
P5.1/S14	1	P5.1 (I/O)	I: 0; O: 1	0	0
		N/A	0	1	0
		DVSS	1	1	0
		S14	X	X	1
P5.2/S13	2	P5.2 (I/O)	I: 0; O: 1	0	0
		N/A	0	1	0
		DVSS	1	1	0
		S13	X	X	1
P5.3/S12	3	P5.3 (I/O)	I: 0; O: 1	0	0
		N/A	0	1	0
		DVSS	1	1	0
		S12	X	X	1
P5.4/S11	4	P5.4 (I/O)	I: 0; O: 1	0	0
		N/A	0	1	0
		DVSS	1	1	0
		S11	X	X	1
P5.5/S10	5	P5.5 (I/O)	I: 0; O: 1	0	0
		N/A	0	1	0
		DVSS	1	1	0
		S10	X	X	1
P5.6/S9	6	P5.6 (I/O)	I: 0; O: 1	0	0
		N/A	0	1	0
		DVSS	1	1	0
		S9	X	X	1
P5.7/S8	7	P5.7 (I/O)	I: 0; O: 1	0	0
		N/A	0	1	0
		DVSS	1	1	0
		S8	X	X	1

(1) X = Don't care

Table 6-79. Port P6 (P6.0 to P6.7) Pin Functions (MSP430F67xxIPN Only)

PIN NAME (P6.x)	x	FUNCTION	CONTROL BITS OR SIGNALS (1)		
			P6DIR.x	P6SEL.x	LCDS7... LCDS0
P6.0/S7	0	P6.0 (I/O)	I: 0; O: 1	0	0
		N/A	0	1	0
		DVSS	1	1	0
		S7	X	X	1
P6.1/S6	1	P6.1 (I/O)	I: 0; O: 1	0	0
		N/A	0	1	0
		DVSS	1	1	0
		S6	X	X	1
P6.2/S5	2	P6.2 (I/O)	I: 0; O: 1	0	0
		N/A	0	1	0
		DVSS	1	1	0
		S5	X	X	1
P6.3/S4	3	P6.3 (I/O)	I: 0; O: 1	0	0
		N/A	0	1	0
		DVSS	1	1	0
		S4	X	X	1
P6.4/S3	4	P6.4 (I/O)	I: 0; O: 1	0	0
		N/A	0	1	0
		DVSS	1	1	0
		S3	X	X	1
P6.5/S2	5	P6.5 (I/O)	I: 0; O: 1	0	0
		N/A	0	1	0
		DVSS	1	1	0
		S2	X	X	1
P6.6/S1	6	P6.6 (I/O)	I: 0; O: 1	0	0
		N/A	0	1	0
		DVSS	1	1	0
		S1	X	X	1
P6.7/S0	7	P6.7 (I/O)	I: 0; O: 1	0	0
		N/A	0	1	0
		DVSS	1	1	0
		S0	X	X	1

(1) X = Don't care

Copyright © 2011–2018, Texas Instruments Incorporated

6.12.16 Port PJ (PJ.0) JTAG Pin TDO, Input/Output With Schmitt Trigger or Output

Figure 6-17 shows the port diagram. Table 6-80 summarizes the selection of the pin functions.

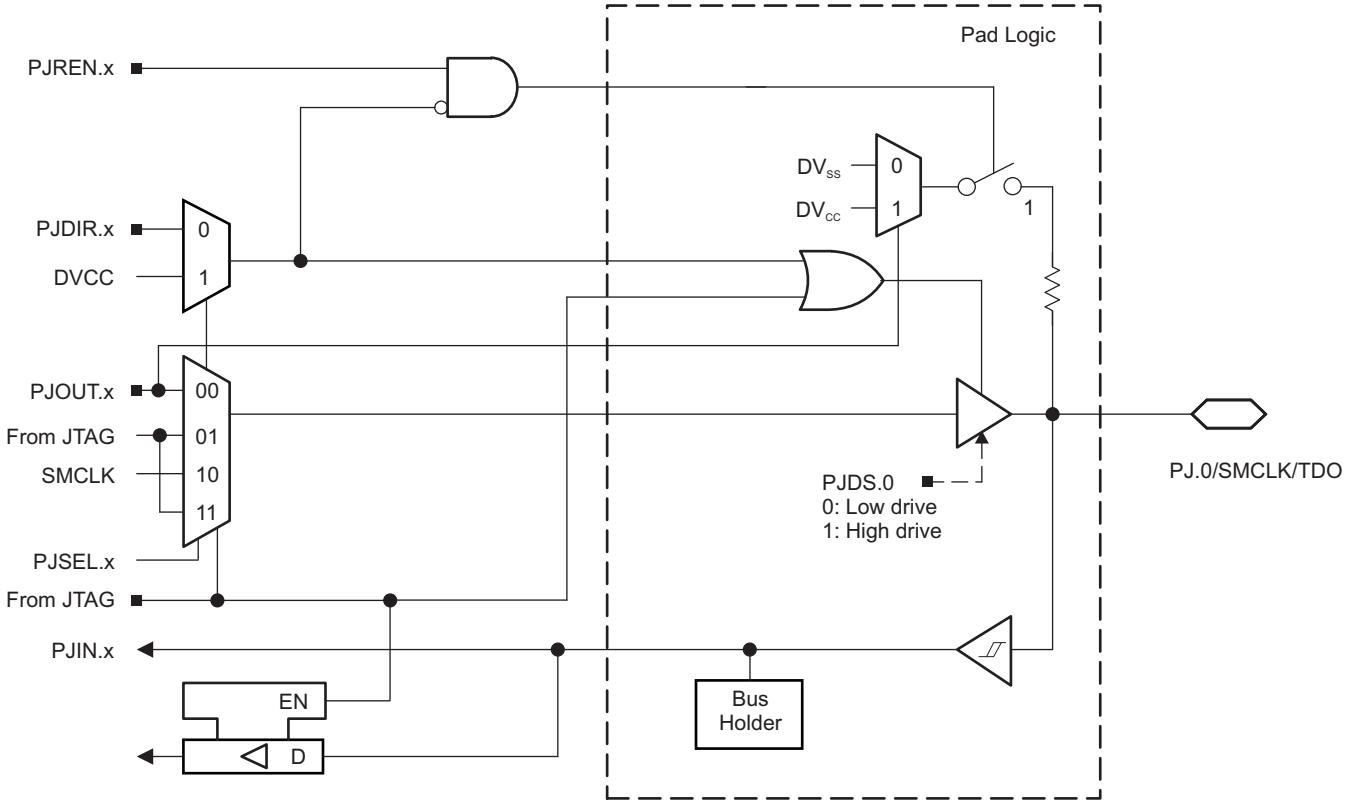

Figure 6-17. Port PJ (PJ.0) Diagram

6.12.17 Port PJ (PJ.1 to PJ.3) JTAG Pins TMS, TCK, TDI/TCLK, Input/Output With Schmitt Trigger or Output

Figure 6-18 shows the port diagram. Table 6-80 summarizes the selection of the pin functions.

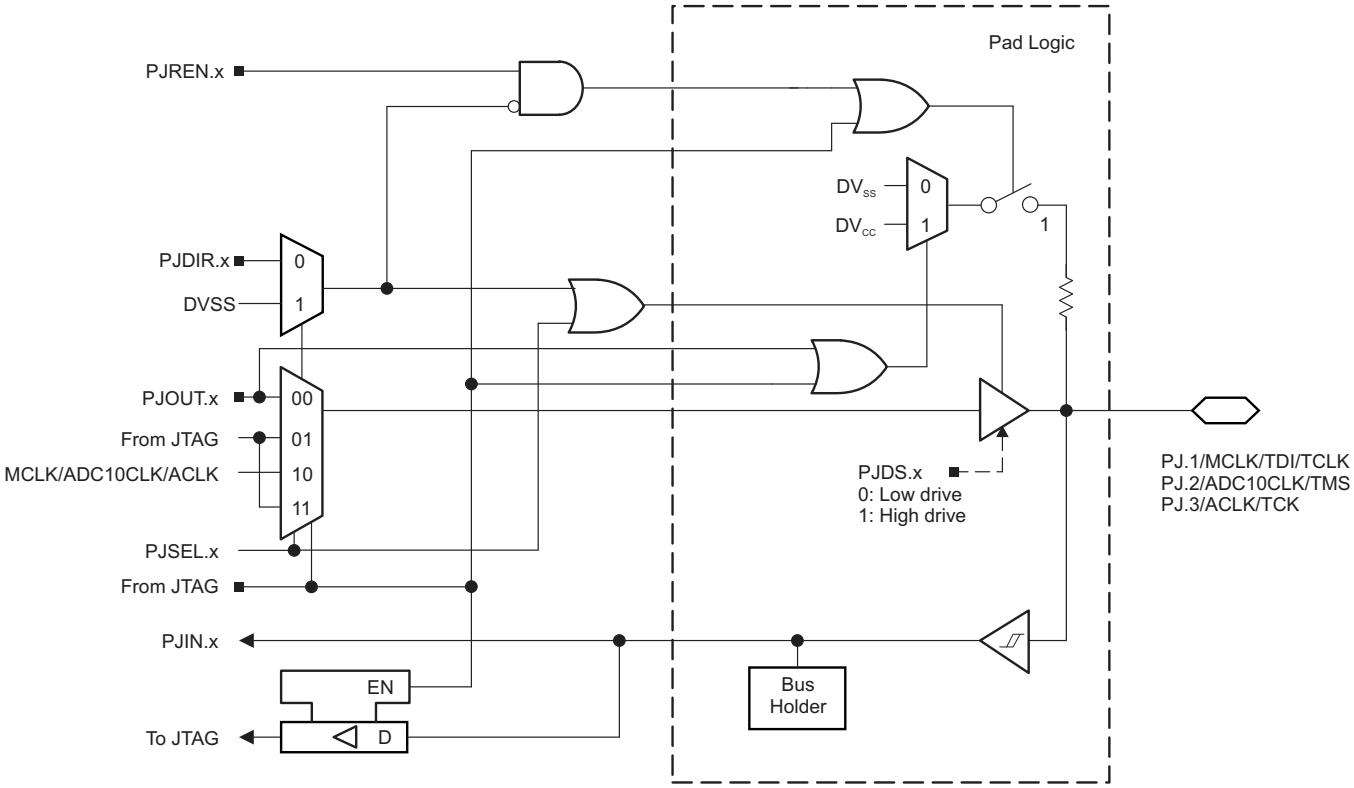

Figure 6-18. Port PJ (PJ.1 to PJ.3) Diagram

Table 6-80. Port PJ (PJ.0 to PJ.3) Pin Functions

PIN NAME (PJ.x)	x	FUNCTION	CONTROL BITS OR SIGNALS(1)		
			PJDIR.x	PJSEL.x	JTAG Mode Signal
PJ.0/SMCLK/TDO	0	PJ.0 (I/O)(2)	I: 0; O: 1	0	0
		SMCLK	1	1	0
		TDO(3)	X	X	1
PJ.1/MCLK/TDI/TCLK	1	PJ.1 (I/O)(2)	I: 0; O: 1	0	0
		MCLK	1	1	0
		TDI/TCLK (3)(4)	X	X	1
PJ.2/ADC10CLK/TMS	2	PJ.2 (I/O)(2)	I: 0; O: 1	0	0
		ADC10CLK	1	1	0
		TMS (3)(4)	X	X	1
PJ.3/ACLK/TCK	3	PJ.3 (I/O)(2)	I: 0; O: 1	0	0
		ACLK	1	1	0
		TCK (3)(4)	X	X	1

(1) X = Don't care
(2) Default condition
(3) The pin direction is controlled by the JTAG module.
(4) In JTAG mode, pullups are activated automatically on TMS, TCK, and TDI/TCLK. PJREN.x are don't care.

Copyright © 2011–2018, Texas Instruments Incorporated

6.13 Device Descriptors (TLV)

Table 6-81 and Table 6-82 list the contents of the device descriptor tag-length-value (TLV) structure for each device type.

Table 6-81. MSP430F673x Device Descriptors

DESCRIPTION		ADDRESS	SIZE (bytes)	VALUE					
				F6736PZ F6736PN	F6735PZ F6735PN	F6734PZ F6734PN	F6733PZ F6733PN	F6731PZ F6731PN	F6730PZ F6730PN
Info Block	Info length	01A00h	1	06h	06h	06h	06h	06h	06h
	CRC length	01A01h	1	06h	06h	06h	06h	06h	06h
	CRC value	01A02h	2	Per unit	Per unit	Per unit	Per unit	Per unit	Per unit
	Device ID	01A04h	1	6Ch	6Bh	6Ah	65h	63h	62h
	Device ID	01A05h	1	81h	81h	81h	80h	80h	80h
	Hardware revision	01A06h	1	Per unit	Per unit	Per unit	Per unit	Per unit	Per unit
	Firmware revision	01A07h	1	Per unit	Per unit	Per unit	Per unit	Per unit	Per unit
Die Record	Die record tag	01A08h	1	08h	08h	08h	08h	08h	08h
	Die record length	01A09h	1	0Ah	0Ah	0Ah	0Ah	0Ah	0Ah
	Lot/wafer ID	01A0Ah	4	Per unit	Per unit	Per unit	Per unit	Per unit	Per unit
	Die X position	01A0Eh	2	Per unit	Per unit	Per unit	Per unit	Per unit	Per unit
	Die Y position	01A10h	2	Per unit	Per unit	Per unit	Per unit	Per unit	Per unit
	Test results	01A12h	2	Per unit	Per unit	Per unit	Per unit	Per unit	Per unit
ADC10 Calibration	ADC10 calibration tag	01A14h	1	13h	13h	13h	13h	13h	13h
	ADC10 calibration length	01A15h	1	10h	10h	10h	10h	10h	10h
	ADC gain factor	01A16h	2	Per unit	Per unit	Per unit	Per unit	Per unit	Per unit
	ADC offset	01A18h	2	Per unit	Per unit	Per unit	Per unit	Per unit	Per unit
	ADC 1.5-V reference Temperature sensor 30°C	01A1Ah	2	Per unit	Per unit	Per unit	Per unit	Per unit	Per unit
	ADC 1.5-V reference Temperature sensor 85°C	01A1Ch	2	Per unit	Per unit	Per unit	Per unit	Per unit	Per unit
	ADC 2.0-V reference Temperature sensor 30°C	01A1Eh	2	Per unit	Per unit	Per unit	Per unit	Per unit	Per unit
	ADC 2.0-V reference Temperature sensor 85°C	01A20h	2	Per unit	Per unit	Per unit	Per unit	Per unit	Per unit
	ADC 2.5-V reference Temperature sensor 30°C	01A22h	2	Per unit	Per unit	Per unit	Per unit	Per unit	Per unit
	ADC 2.5-V reference Temperature sensor 85°C	01A24h	2	Per unit	Per unit	Per unit	Per unit	Per unit	Per unit

Copyright © 2011–2018, Texas Instruments Incorporated

Table 6-82. MSP430F672x Device Descriptors

DESCRIPTION		ADDRESS	SIZE (bytes)	VALUE					
				F6726PZ F6726PN	F6725PZ F6725PN	F6724PZ F6724PN	F6723PZ F6723PN	F6721PZ F6721PN	F6720PZ F6720PN
Info Block	Info length	01A00h	1	06h	06h	06h	06h	06h	06h
	CRC length	01A01h	1	06h	06h	06h	06h	06h	06h
	CRC value	01A02h	2	Per unit	Per unit	Per unit	Per unit	Per unit	Per unit
	Device ID	01A04h	1	6Fh	6Eh	6Dh	61h	59h	58h
	Device ID	01A05h	1	81h	81h	81h	80h	80h	80h
	Hardware revision	01A06h	1	Per unit	Per unit	Per unit	Per unit	Per unit	Per unit
	Firmware revision	01A07h	1	Per unit	Per unit	Per unit	Per unit	Per unit	Per unit
Die Record	Die record tag	01A08h	1	08h	08h	08h	08h	08h	08h
	Die record length	01A09h	1	0Ah	0Ah	0Ah	0Ah	0Ah	0Ah
	Lot/wafer ID	01A0Ah	4	Per unit	Per unit	Per unit	Per unit	Per unit	Per unit
	Die X position	01A0Eh	2	Per unit	Per unit	Per unit	Per unit	Per unit	Per unit
	Die Y position	01A10h	2	Per unit	Per unit	Per unit	Per unit	Per unit	Per unit
	Test results	01A12h	2	Per unit	Per unit	Per unit	Per unit	Per unit	Per unit
ADC10 Calibration	ADC10 calibration tag	01A14h	1	13h	13h	13h	13h	13h	13h
	ADC10 calibration length	01A15h	1	10h	10h	10h	10h	10h	10h
	ADC gain factor	01A16h	2	Per unit	Per unit	Per unit	Per unit	Per unit	Per unit
	ADC offset	01A18h	2	Per unit	Per unit	Per unit	Per unit	Per unit	Per unit
	ADC 1.5-V reference Temperature sensor 30°C	01A1Ah	2	Per unit	Per unit	Per unit	Per unit	Per unit	Per unit
	ADC 1.5-V reference Temperature sensor 85°C	01A1Ch	2	Per unit	Per unit	Per unit	Per unit	Per unit	Per unit
	ADC 2.0-V reference Temperature sensor 30°C	01A1Eh	2	Per unit	Per unit	Per unit	Per unit	Per unit	Per unit
	ADC 2.0-V reference Temperature sensor 85°C	01A20h	2	Per unit	Per unit	Per unit	Per unit	Per unit	Per unit
	ADC 2.5-V reference Temperature sensor 30°C	01A22h	2	Per unit	Per unit	Per unit	Per unit	Per unit	Per unit
	ADC 2.5-V reference Temperature sensor 85°C	01A24h	2	Per unit	Per unit	Per unit	Per unit	Per unit	Per unit

Copyright © 2011–2018, Texas Instruments Incorporated

7 Device and Documentation Support

7.1 Getting Started and Next Steps

For more information on the MSP430™ family of devices and the tools and libraries that are available to help with your development, visit the Getting Started page.

7.2 Device Nomenclature

To designate the stages in the product development cycle, TI assigns prefixes to the part numbers of all MSP MCU devices. Each MSP MCU commercial family member has one of two prefixes: MSP or XMS. These prefixes represent evolutionary stages of product development from engineering prototypes (XMS) through fully qualified production devices (MSP).

XMS – Experimental device that is not necessarily representative of the final device's electrical specifications

MSP – Fully qualified production device

XMS devices are shipped against the following disclaimer:

"Developmental product is intended for internal evaluation purposes."

MSP devices have been characterized fully, and the quality and reliability of the device have been demonstrated fully. TI's standard warranty applies.

Predictions show that prototype devices (XMS) have a greater failure rate than the standard production devices. TI recommends that these devices not be used in any production system because their expected end-use failure rate still is undefined. Only qualified production devices are to be used.

TI device nomenclature also includes a suffix with the device family name. This suffix indicates the temperature range, package type, and distribution format. Figure 7-1 provides a legend for reading the complete device name.

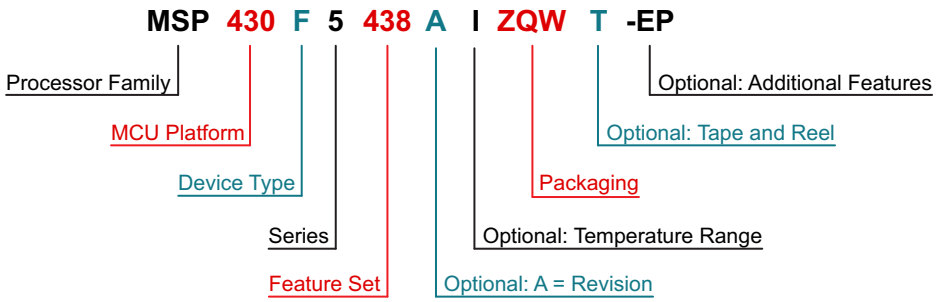

Processor Family	CC = Embedded RF Radio MSP = Mixed-Signal Processor XMS = Experimental Silicon PMS = Prototype Device	
MCU Platform	430 = MSP430 low-power microcontroller platform	
Device Type	**Memory Type** C = ROM F = Flash FR = FRAM G = Flash or FRAM (Value Line) L = No Nonvolatile Memory	**Specialized Application** AFE = Analog Front End BQ = Contactless Power CG = ROM Medical FE = Flash Energy Meter FG = Flash Medical FW = Flash Electronic Flow Meter
Series	1 = Up to 8 MHz 2 = Up to 16 MHz 3 = Legacy 4 = Up to 16 MHz with LCD	5 = Up to 25 MHz 6 = Up to 25 MHz with LCD 0 = Low-Voltage Series
Feature Set	Various levels of integration within a series	
Optional: A = Revision	N/A	
Optional: Temperature Range	S = 0°C to 50°C C = 0°C to 70°C I = –40°C to 85°C T = –40°C to 105°C	
Packaging	http://www.ti.com/packaging	
Optional: Tape and Reel	T = Small reel R = Large reel No markings = Tube or tray	
Optional: Additional Features	-EP = Enhanced Product (–40°C to 105°C) -HT = Extreme Temperature Parts (–55°C to 150°C) -Q1 = Automotive Q100 Qualified	

Figure 7-1. Device Nomenclature

Copyright © 2011–2018, Texas Instruments Incorporated

7.3 Tools and Software

All MSP microcontrollers are supported by a wide variety of software and hardware development tools. Tools are available from TI and various third parties. See them all at MSP430 Ultra-Low-Power MCUs – Tools & software.

Table 7-1 lists the debug features of the MSP430F673x and MSP430F672x MCUs. See the *Code Composer Studio for MSP430 User's Guide* for details on the available features.

Table 7-1. Hardware Debug Features

MSP430 ARCHITECTURE	4-WIRE JTAG	2-WIRE JTAG	BREAK-POINTS (N)	RANGE BREAK-POINTS	CLOCK CONTROL	STATE SEQUENCER	TRACE BUFFER	LPMX.5 DEBUGGING SUPPORT
MSP430Xv2	Yes	Yes	3	Yes	Yes	No	No	No

Design Kits and Evaluation Modules

MSP-TS430PZ100B - 100-pin Target Development Board for MSP430F6x MCUs The MSP-TS430PZ100B is a stand-alone 100-pin ZIF socket target board used to program and debug the MSP430 MCU in-system through the JTAG interface or the Spy Bi-Wire (2-wire JTAG) protocol.

100-pin Target Development Board and MSP-FET Programmer Bundle for MSP430F6x MCUs The MSP-FET is a powerful flash emulation tool to quickly begin application development on the MSP430 MCU. It includes USB debugging interface used to program and debug the MSP430 in-system through the JTAG interface or the pin saving Spy Bi-Wire (2-wire JTAG) protocol.

EVM430-F6736 - MSP430F6736 EVM for Metering This EVM430-F6736 is a single-phase electricity meter evaluation module based on the MSP430F6736 device. The E-meter can be connected to the main power lines and has inputs for voltage and current, as well as a third connection to setup anti-tampering.

Software

MSP430Ware™ Software MSP430Ware software is a collection of code examples, data sheets, and other design resources for all MSP430 devices delivered in a convenient package. In addition to providing a complete collection of existing MSP430 design resources, MSP430Ware software also includes a high-level API called MSP Driver Library. This library makes it easy to program MSP430 hardware. MSP430Ware software is available as a component of CCS or as a stand-alone package.

Energy Measurement Design Center for MSP430 MCUs The Energy Measurement Design Center is a rapid development tool that enables energy measurement using TI MSP430i20xx and MSP430F67xx flash-based microcontrollers (MCUs). It includes a graphical user interface (GUI), documentation, software library, and examples that can simplify development and accelerate designs in a wide range of power monitoring and energy measurement applications, including smart grid and building automation. Using the Design Center, you can configure, calibrate, and view results without writing a single line of code.

MSP Driver Library The abstracted API of MSP Driver Library provides easy-to-use function calls that free you from directly manipulating the bits and bytes of the MSP430 hardware. Thorough documentation is delivered through a helpful API Guide, which includes details on each function call and the recognized parameters. Developers can use Driver Library functions to write complete projects with minimal overhead.

IEC60730 Software Package The IEC60730 MSP430 software package was developed to help customers comply with IEC 60730-1:2010 (Automatic Electrical Controls for Household and Similar Use – Part 1: General Requirements) for up to Class B products, which includes home appliances, arc detectors, power converters, power tools, e-bikes, and many others. The IEC60730 MSP430 software package can be embedded in customer applications running on MSP430s to help simplify the customer's certification efforts of functional safety-compliant consumer devices to IEC 60730-1:2010 Class B.

MSP430F673x, MSP430F672x Code Examples C code examples are available for every MSP device that configures each of the integrated peripherals for various application needs.

Capacitive Touch Software Library Free C libraries for enabling capacitive touch capabilities on MSP430 MCUs. The MSP430 MCU version of the library features several capacitive touch implementations including the RO and RC method.

MSP EnergyTrace™ Technology EnergyTrace technology for MSP430 microcontrollers is an energy-based code analysis tool that measures and displays the energy profile of the application and helps to optimize it for ultra-low-power consumption.

ULP (Ultra-Low Power) Advisor ULP Advisor™ software is a tool for guiding developers to write more efficient code to fully use the unique ultra-low-power features of MSP and MSP432 microcontrollers. Aimed at both experienced and new microcontroller developers, ULP Advisor checks your code against a thorough ULP checklist to help minimize the energy consumption of your application. At build time, ULP Advisor provides notifications and remarks to highlight areas of your code that can be further optimized for lower power.

Fixed Point Math Library for MSP The MSP IQmath and Qmath Libraries are a collection of highly optimized and high-precision mathematical functions for C programmers to seamlessly port a floating-point algorithm into fixed-point code on MSP430 and MSP432 devices. These routines are typically used in computationally intensive real-time applications where optimal execution speed, high accuracy, and ultra-low energy are critical. By using the IQmath and Qmath libraries, it is possible to achieve execution speeds considerably faster and energy consumption considerably lower than equivalent code written using floating-point math.

Floating Point Math Library for MSP430 Continuing to innovate in the low-power and low-cost microcontroller space, TI provides MSPMATHLIB. Leveraging the intelligent peripherals of our devices, this floating-point math library of scalar functions that are up to 26 times faster than the standard MSP430 math functions. Mathlib is easy to integrate into your designs. This library is free and is integrated in both Code Composer Studio IDE and IAR Embedded Workbench IDE.

Development Tools

Code Composer Studio™ Integrated Development Environment for MSP Microcontrollers Code Composer Studio (CCS) integrated development environment (IDE) supports all MSP microcontroller devices. CCS comprises a suite of embedded software utilities used to develop and debug embedded applications. It includes an optimizing C/C++ compiler, source code editor, project build environment, debugger, profiler, and many other features.

Command-Line Programmer MSP Flasher is an open-source shell-based interface for programming MSP microcontrollers through a FET programmer or eZ430 using JTAG or Spy-Bi-Wire (SBW) communication. MSP Flasher can download binary files (.txt or .hex) directly to the MSP microcontroller without an IDE.

MSP MCU Programmer and Debugger The MSP-FET is a powerful emulation development tool – often called a debug probe – which lets users quickly begin application development on MSP low-power MCUs. Creating MCU software usually requires downloading the resulting binary program to the MSP device for validation and debugging.

MSP-GANG Production Programmer The MSP Gang Programmer is an MSP430 or MSP432 device programmer that can program up to eight identical MSP430 or MSP432 flash or FRAM devices at the same time. The MSP Gang Programmer connects to a host PC using a standard RS-232 or USB connection and provides flexible programming options that let the user fully customize the process.

Copyright © 2011–2018, Texas Instruments Incorporated

7.4 Documentation Support

The following documents describe the MSP430F673x and MSP430F672x MCUs. Copies of these documents are available on the Internet at www.ti.com.

Receiving Notification of Document Updates

To receive notification of documentation updates—including silicon errata—go to the product folder for your device on ti.com (for links to the product folders, see Section 7.5). In the upper right corner, click the "Alert me" button. This registers you to receive a weekly digest of product information that has changed (if any). For change details, check the revision history of any revised document.

Errata

MSP430F6736 Device Erratasheet Describes the known exceptions to the functional specifications.

MSP430F6735 Device Erratasheet Describes the known exceptions to the functional specifications.

MSP430F6734 Device Erratasheet Describes the known exceptions to the functional specifications.

MSP430F6733 Device Erratasheet Describes the known exceptions to the functional specifications.

MSP430F6731 Device Erratasheet Describes the known exceptions to the functional specifications.

MSP430F6730 Device Erratasheet Describes the known exceptions to the functional specifications.

MSP430F6726 Device Erratasheet Describes the known exceptions to the functional specifications.

MSP430F6725 Device Erratasheet Describes the known exceptions to the functional specifications.

MSP430F6724 Device Erratasheet Describes the known exceptions to the functional specifications.

MSP430F6723 Device Erratasheet Describes the known exceptions to the functional specifications.

MSP430F6721 Device Erratasheet Describes the known exceptions to the functional specifications.

MSP430F6720 Device Erratasheet Describes the known exceptions to the functional specifications.

User's Guides

MSP430x5xx and MSP430x6xx Family User's Guide Detailed information on the modules and peripherals available in this device family.

MSP430 Flash Device Bootloader (BSL) User's Guide The MSP430 bootloader (BSL) (formerly known as the bootstrap loader) lets users communicate with embedded memory in the MSP430 microcontroller during the prototyping phase, final production, and in service. Both the programmable memory (flash memory) and the data memory (RAM) can be modified as required. Do not confuse the bootloader with the bootstrap loader programs found in some digital signal processors (DSPs) that automatically load program code (and data) from external memory to the internal memory of the DSP.

MSP430 Programming With the JTAG Interface This document describes the functions that are required to erase, program, and verify the memory module of the MSP430 flash-based and FRAM-based microcontroller families using the JTAG communication port. In addition, it describes how to program the JTAG access security fuse that is available on all MSP430 devices. This document describes device access using both the standard 4-wire JTAG interface and the 2-wire JTAG interface, which is also referred to as Spy-Bi-Wire (SBW).

MSP430 Hardware Tools User's Guide This manual describes the hardware of the TI MSP-FET430 Flash Emulation Tool (FET). The FET is the program development tool for the MSP430 ultra-low-power microcontroller. Both available interface types, the parallel port interface and the USB interface, are described.

Application Reports

MSP430 32-kHz Crystal Oscillators Selection of the correct crystal, correct load circuit, and proper board layout are important for a stable crystal oscillator. This application report summarizes crystal oscillator function and explains the parameters to select the correct crystal for MSP430 ultra-low-power operation. In addition, hints and examples for correct board layout are given. The document also contains detailed information on the possible oscillator tests to ensure stable oscillator operation in mass production.

MSP430 System-Level ESD Considerations System-Level ESD has become increasingly demanding with silicon technology scaling towards lower voltages and the need for designing cost-effective and ultra-low-power components. This application report addresses three different ESD topics to help board designers and OEMs understand and design robust system-level designs.

Designing With MSP430 and Segment LCDs Segment liquid crystal displays (LCDs) are needed to provide information to users in a wide variety of applications from smart meters to electronic shelf labels (ESLs) to medical equipment. Several MSP430 microcontroller families include built-in low-power LCD driver circuitry that allows the MSP430 MCU to directly control the segmented LCD glass. This application note helps explain how segmented LCDs work, the different features of the various LCD modules across the MSP430 MCU family, LCD hardware layout tips, guidance on writing efficient and easy-to-use LCD driver software, and an overview of the portfolio of MSP430 devices that include different LCD features to aid in device selection.

7.5 Related Links

Table 7-2 lists quick access links. Categories include technical documents, support and community resources, tools and software, and quick access to sample or buy.

Table 7-2. Related Links

PARTS	PRODUCT FOLDER	ORDER NOW	TECHNICAL DOCUMENTS	TOOLS & SOFTWARE	SUPPORT & COMMUNITY
MSP430F6736	Click here	Click here	Click here	Click here	Click here
MSP430F6735	Click here	Click here	Click here	Click here	Click here
MSP430F6734	Click here	Click here	Click here	Click here	Click here
MSP430F6733	Click here	Click here	Click here	Click here	Click here
MSP430F6731	Click here	Click here	Click here	Click here	Click here
MSP430F6730	Click here	Click here	Click here	Click here	Click here
MSP430F6726	Click here	Click here	Click here	Click here	Click here
MSP430F6725	Click here	Click here	Click here	Click here	Click here
MSP430F6724	Click here	Click here	Click here	Click here	Click here
MSP430F6723	Click here	Click here	Click here	Click here	Click here
MSP430F6721	Click here	Click here	Click here	Click here	Click here
MSP430F6720	Click here	Click here	Click here	Click here	Click here

7.6 Community Resources

The following links connect to TI community resources. Linked contents are provided "AS IS" by the respective contributors. They do not constitute TI specifications and do not necessarily reflect TI's views; see TI's Terms of Use.

TI E2E™ Community
TI's Engineer-to-Engineer (E2E) Community. Created to foster collaboration among engineers. At e2e.ti.com, you can ask questions, share knowledge, explore ideas, and help solve problems with fellow engineers.

TI Embedded Processors Wiki
Texas Instruments Embedded Processors Wiki. Established to help developers get started with embedded processors from Texas Instruments and to foster innovation and growth of general knowledge about the hardware and software surrounding these devices.

7.7 Trademarks

MSP430, MSP430Ware, EnergyTrace, ULP Advisor, Code Composer Studio, E2E are trademarks of Texas Instruments.
All other trademarks are the property of their respective owners.

Copyright © 2011–2018, Texas Instruments Incorporated

7.8 Electrostatic Discharge Caution

This integrated circuit can be damaged by ESD. Texas Instruments recommends that all integrated circuits be handled with appropriate precautions. Failure to observe proper handling and installation procedures can cause damage.

ESD damage can range from subtle performance degradation to complete device failure. Precision integrated circuits may be more susceptible to damage because very small parametric changes could cause the device not to meet its published specifications.

7.9 Export Control Notice

Recipient agrees to not knowingly export or re-export, directly or indirectly, any product or technical data (as defined by the U.S., EU, and other Export Administration Regulations) including software, or any controlled product restricted by other applicable national regulations, received from disclosing party under nondisclosure obligations (if any), or any direct product of such technology, to any destination to which such export or re-export is restricted or prohibited by U.S. or other applicable laws, without obtaining prior authorization from U.S. Department of Commerce and other competent Government authorities to the extent required by those laws.

7.10 Glossary

TI Glossary This glossary lists and explains terms, acronyms, and definitions.

8 Mechanical, Packaging, and Orderable Information

The following pages include mechanical, packaging, and orderable information. This information is the most current data available for the designated devices. This data is subject to change without notice and revision of this document. For browser-based versions of this data sheet, refer to the left-hand navigation.

Copyright © 2011–2018, Texas Instruments Incorporated

PACKAGING INFORMATION

Orderable part number	Status (1)	Material type (2)	Package | Pins	Package qty | Carrier	RoHS (3)	Lead finish/ Ball material (4)	MSL rating/ Peak reflow (5)	Op temp (°C)	Part marking (6)
MSP430F6720IPN	Active	Production	LQFP (PN) | 80	119 | JEDEC TRAY (10+1)	Yes	NIPDAU	Level-3-260C-168 HR	-40 to 85	F6720
MSP430F6720IPN.B	Active	Production	LQFP (PN) | 80	119 | JEDEC TRAY (10+1)	Yes	NIPDAU	Level-3-260C-168 HR	-40 to 85	F6720
MSP430F6720IPNR	Active	Production	LQFP (PN) | 80	1000 | LARGE T&R	Yes	NIPDAU	Level-3-260C-168 HR	-40 to 85	F6720
MSP430F6720IPNR.B	Active	Production	LQFP (PN) | 80	1000 | LARGE T&R	Yes	NIPDAU	Level-3-260C-168 HR	-40 to 85	F6720
MSP430F6720IPZ	Active	Production	LQFP (PZ) | 100	90 | JEDEC TRAY (10+1)	Yes	NIPDAU	Level-3-260C-168 HR	-40 to 85	F6720
MSP430F6720IPZ.B	Active	Production	LQFP (PZ) | 100	90 | JEDEC TRAY (10+1)	Yes	NIPDAU	Level-3-260C-168 HR	-40 to 85	F6720
MSP430F6720IPZR	Active	Production	LQFP (PZ) | 100	1000 | LARGE T&R	Yes	NIPDAU	Level-3-260C-168 HR	-40 to 85	F6720
MSP430F6720IPZR.B	Active	Production	LQFP (PZ) | 100	1000 | LARGE T&R	Yes	NIPDAU	Level-3-260C-168 HR	-40 to 85	F6720
MSP430F6721IPN	Active	Production	LQFP (PN) | 80	119 | JEDEC TRAY (10+1)	Yes	NIPDAU	Level-3-260C-168 HR	-40 to 85	F6721
MSP430F6721IPN.B	Active	Production	LQFP (PN) | 80	119 | JEDEC TRAY (10+1)	Yes	NIPDAU	Level-3-260C-168 HR	-40 to 85	F6721
MSP430F6721IPNR	Active	Production	LQFP (PN) | 80	1000 | LARGE T&R	Yes	NIPDAU	Level-3-260C-168 HR	-40 to 85	F6721
MSP430F6721IPNR.B	Active	Production	LQFP (PN) | 80	1000 | LARGE T&R	Yes	NIPDAU	Level-3-260C-168 HR	-40 to 85	F6721
MSP430F6721IPZ	Active	Production	LQFP (PZ) | 100	90 | JEDEC TRAY (10+1)	Yes	NIPDAU	Level-3-260C-168 HR	-40 to 85	F6721
MSP430F6721IPZ.B	Active	Production	LQFP (PZ) | 100	90 | JEDEC TRAY (10+1)	Yes	NIPDAU	Level-3-260C-168 HR	-40 to 85	F6721
MSP430F6721IPZR	Active	Production	LQFP (PZ) | 100	1000 | LARGE T&R	Yes	NIPDAU	Level-3-260C-168 HR	-40 to 85	F6721
MSP430F6721IPZR.B	Active	Production	LQFP (PZ) | 100	1000 | LARGE T&R	Yes	NIPDAU	Level-3-260C-168 HR	-40 to 85	F6721
MSP430F6723IPN	Active	Production	LQFP (PN) | 80	119 | JEDEC TRAY (10+1)	Yes	NIPDAU	Level-3-260C-168 HR	-40 to 85	F6723
MSP430F6723IPN.B	Active	Production	LQFP (PN) | 80	119 | JEDEC TRAY (10+1)	Yes	NIPDAU	Level-3-260C-168 HR	-40 to 85	F6723
MSP430F6723IPNR	Active	Production	LQFP (PN) | 80	1000 | LARGE T&R	Yes	NIPDAU	Level-3-260C-168 HR	-40 to 85	F6723
MSP430F6723IPNR-S	Active	Production	LQFP (PN) | 80	1000 | LARGE T&R	Yes	NIPDAU	Level-3-260C-168 HR	-40 to 85	F6723
MSP430F6723IPNR.B	Active	Production	LQFP (PN) | 80	1000 | LARGE T&R	Yes	NIPDAU	Level-3-260C-168 HR	-40 to 85	F6723

Orderable part number	Status (1)	Material type (2)	Package | Pins	Package qty | Carrier	RoHS (3)	Lead finish/ Ball material (4)	MSL rating/ Peak reflow (5)	Op temp (°C)	Part marking (6)
MSP430F6723IPZ	Active	Production	LQFP (PZ) | 100	90 | JEDEC TRAY (10+1)	Yes	NIPDAU	Level-3-260C-168 HR	-40 to 85	F6723
MSP430F6723IPZ.B	Active	Production	LQFP (PZ) | 100	90 | JEDEC TRAY (10+1)	Yes	NIPDAU	Level-3-260C-168 HR	-40 to 85	F6723
MSP430F6723IPZR	Active	Production	LQFP (PZ) | 100	1000 | LARGE T&R	Yes	NIPDAU	Level-3-260C-168 HR	-40 to 85	F6723
MSP430F6723IPZR.B	Active	Production	LQFP (PZ) | 100	1000 | LARGE T&R	Yes	NIPDAU	Level-3-260C-168 HR	-40 to 85	F6723
MSP430F6724IPN	Active	Production	LQFP (PN) | 80	119 | JEDEC TRAY (10+1)	Yes	NIPDAU	Level-3-260C-168 HR	-40 to 85	F6724
MSP430F6724IPN.B	Active	Production	LQFP (PN) | 80	119 | JEDEC TRAY (10+1)	Yes	NIPDAU	Level-3-260C-168 HR	-40 to 85	F6724
MSP430F6724IPNR	Active	Production	LQFP (PN) | 80	1000 | LARGE T&R	Yes	NIPDAU	Level-3-260C-168 HR	-40 to 85	F6724
MSP430F6724IPNR.B	Active	Production	LQFP (PN) | 80	1000 | LARGE T&R	Yes	NIPDAU	Level-3-260C-168 HR	-40 to 85	F6724
MSP430F6724IPZ	Active	Production	LQFP (PZ) | 100	90 | JEDEC TRAY (10+1)	Yes	NIPDAU	Level-3-260C-168 HR	-40 to 85	F6724
MSP430F6724IPZ.B	Active	Production	LQFP (PZ) | 100	90 | JEDEC TRAY (10+1)	Yes	NIPDAU	Level-3-260C-168 HR	-40 to 85	F6724
MSP430F6724IPZR	Active	Production	LQFP (PZ) | 100	-	-	Call TI	Call TI	-40 to 85	F6724
MSP430F6725IPN	Active	Production	LQFP (PN) | 80	119 | JEDEC TRAY (10+1)	Yes	NIPDAU	Level-3-260C-168 HR	-40 to 85	F6725
MSP430F6725IPN.B	Active	Production	LQFP (PN) | 80	119 | JEDEC TRAY (10+1)	Yes	NIPDAU	Level-3-260C-168 HR	-40 to 85	F6725
MSP430F6725IPNR	Active	Production	LQFP (PN) | 80	1000 | LARGE T&R	Yes	NIPDAU	Level-3-260C-168 HR	-40 to 85	F6725
MSP430F6725IPNR.B	Active	Production	LQFP (PN) | 80	1000 | LARGE T&R	Yes	NIPDAU	Level-3-260C-168 HR	-40 to 85	F6725
MSP430F6725IPZ	Active	Production	LQFP (PZ) | 100	90 | JEDEC TRAY (10+1)	Yes	NIPDAU	Level-3-260C-168 HR	-40 to 85	F6725
MSP430F6725IPZ.B	Active	Production	LQFP (PZ) | 100	90 | JEDEC TRAY (10+1)	Yes	NIPDAU	Level-3-260C-168 HR	-40 to 85	F6725
MSP430F6725IPZR	Active	Production	LQFP (PZ) | 100	1000 | LARGE T&R	Yes	NIPDAU	Level-3-260C-168 HR	-40 to 85	F6725
MSP430F6725IPZR.B	Active	Production	LQFP (PZ) | 100	1000 | LARGE T&R	Yes	NIPDAU	Level-3-260C-168 HR	-40 to 85	F6725
MSP430F6726IPN	Active	Production	LQFP (PN) | 80	119 | JEDEC TRAY (10+1)	Yes	NIPDAU	Level-3-260C-168 HR	-40 to 85	F6726
MSP430F6726IPN.B	Active	Production	LQFP (PN) | 80	119 | JEDEC TRAY (10+1)	Yes	NIPDAU	Level-3-260C-168 HR	-40 to 85	F6726
MSP430F6726IPNR	Active	Production	LQFP (PN) | 80	1000 | LARGE T&R	Yes	NIPDAU	Level-3-260C-168 HR	-40 to 85	F6726

Orderable part number	Status (1)	Material type (2)	Package | Pins	Package qty | Carrier	RoHS (3)	Lead finish/ Ball material (4)	MSL rating/ Peak reflow (5)	Op temp (°C)	Part marking (6)
MSP430F6726IPNR.B	Active	Production	LQFP (PN) | 80	1000 | LARGE T&R	Yes	NIPDAU	Level-3-260C-168 HR	-40 to 85	F6726
MSP430F6726IPNRG4	Active	Production	LQFP (PN) | 80	1000 | LARGE T&R	Yes	NIPDAU	Level-3-260C-168 HR	-40 to 85	F6726
MSP430F6726IPNRG4.B	Active	Production	LQFP (PN) | 80	1000 | LARGE T&R	Yes	NIPDAU	Level-3-260C-168 HR	-40 to 85	F6726
MSP430F6726IPZ	Active	Production	LQFP (PZ) | 100	90 | JEDEC TRAY (10+1)	Yes	NIPDAU	Level-3-260C-168 HR	-40 to 85	F6726
MSP430F6726IPZ.B	Active	Production	LQFP (PZ) | 100	90 | JEDEC TRAY (10+1)	Yes	NIPDAU	Level-3-260C-168 HR	-40 to 85	F6726
MSP430F6726IPZR	Active	Production	LQFP (PZ) | 100	1000 | LARGE T&R	Yes	NIPDAU	Level-3-260C-168 HR	-40 to 85	F6726
MSP430F6726IPZR.B	Active	Production	LQFP (PZ) | 100	1000 | LARGE T&R	Yes	NIPDAU	Level-3-260C-168 HR	-40 to 85	F6726
MSP430F6730IPN	Active	Production	LQFP (PN) | 80	119 | JEDEC TRAY (10+1)	Yes	NIPDAU	Level-3-260C-168 HR	-40 to 85	F6730
MSP430F6730IPN.B	Active	Production	LQFP (PN) | 80	119 | JEDEC TRAY (10+1)	Yes	NIPDAU	Level-3-260C-168 HR	-40 to 85	F6730
MSP430F6730IPNR	Active	Production	LQFP (PN) | 80	1000 | LARGE T&R	Yes	NIPDAU	Level-3-260C-168 HR	-40 to 85	F6730
MSP430F6730IPNR.B	Active	Production	LQFP (PN) | 80	1000 | LARGE T&R	Yes	NIPDAU	Level-3-260C-168 HR	-40 to 85	F6730
MSP430F6730IPZ	Active	Production	LQFP (PZ) | 100	90 | JEDEC TRAY (10+1)	Yes	NIPDAU	Level-3-260C-168 HR	-40 to 85	F6730
MSP430F6730IPZ.B	Active	Production	LQFP (PZ) | 100	90 | JEDEC TRAY (10+1)	Yes	NIPDAU	Level-3-260C-168 HR	-40 to 85	F6730
MSP430F6731IPN	Active	Production	LQFP (PN) | 80	119 | JEDEC TRAY (10+1)	Yes	NIPDAU	Level-3-260C-168 HR	-40 to 85	F6731
MSP430F6731IPN.B	Active	Production	LQFP (PN) | 80	119 | JEDEC TRAY (10+1)	Yes	NIPDAU	Level-3-260C-168 HR	-40 to 85	F6731
MSP430F6731IPNR	Active	Production	LQFP (PN) | 80	1000 | LARGE T&R	Yes	NIPDAU	Level-3-260C-168 HR	-40 to 85	F6731
MSP430F6731IPNR.B	Active	Production	LQFP (PN) | 80	1000 | LARGE T&R	Yes	NIPDAU	Level-3-260C-168 HR	-40 to 85	F6731
MSP430F6731IPZ	Obsolete	Production	LQFP (PZ) | 100	-	-	Call TI	Call TI	-	F6731
MSP430F6731IPZR	Obsolete	Production	LQFP (PZ) | 100	-	-	Call TI	Call TI	-	F6731
MSP430F6733IPN	Active	Production	LQFP (PN) | 80	119 | JEDEC TRAY (10+1)	Yes	NIPDAU	Level-3-260C-168 HR	-40 to 85	F6733
MSP430F6733IPN.B	Active	Production	LQFP (PN) | 80	119 | JEDEC TRAY (10+1)	Yes	NIPDAU	Level-3-260C-168 HR	-40 to 85	F6733
MSP430F6733IPNR	Active	Production	LQFP (PN) | 80	1000 | LARGE T&R	Yes	NIPDAU	Level-3-260C-168 HR	-40 to 85	F6733
MSP430F6733IPNR.B	Active	Production	LQFP (PN) | 80	1000 | LARGE T&R	Yes	NIPDAU	Level-3-260C-168 HR	-40 to 85	F6733

Orderable part number	Status (1)	Material type (2)	Package | Pins	Package qty | Carrier	RoHS (3)	Lead finish/ Ball material (4)	MSL rating/ Peak reflow (5)	Op temp (°C)	Part marking (6)
MSP430F6733IPZ	Active	Production	LQFP (PZ) | 100	90 | JEDEC TRAY (10+1)	Yes	NIPDAU	Level-3-260C-168 HR	-	F6733
MSP430F6733IPZ.B	Active	Production	LQFP (PZ) | 100	90 | JEDEC TRAY (10+1)	Yes	NIPDAU	Level-3-260C-168 HR	-40 to 85	F6733
MSP430F6733IPZR	Active	Production	LQFP (PZ) | 100	1000 | LARGE T&R	Yes	NIPDAU	Level-3-260C-168 HR	-	F6733
MSP430F6733IPZR.B	Active	Production	LQFP (PZ) | 100	1000 | LARGE T&R	Yes	NIPDAU	Level-3-260C-168 HR	-40 to 85	F6733
MSP430F6734IPN	Active	Production	LQFP (PN) | 80	119 | JEDEC TRAY (10+1)	Yes	NIPDAU	Level-3-260C-168 HR	-40 to 85	F6734
MSP430F6734IPN.B	Active	Production	LQFP (PN) | 80	119 | JEDEC TRAY (10+1)	Yes	NIPDAU	Level-3-260C-168 HR	-40 to 85	F6734
MSP430F6734IPNR	Active	Production	LQFP (PN) | 80	1000 | LARGE T&R	Yes	NIPDAU	Level-3-260C-168 HR	-40 to 85	F6734
MSP430F6734IPNR.B	Active	Production	LQFP (PN) | 80	1000 | LARGE T&R	Yes	NIPDAU	Level-3-260C-168 HR	-40 to 85	F6734
MSP430F6734IPZ	Active	Production	LQFP (PZ) | 100	90 | JEDEC TRAY (10+1)	Yes	NIPDAU	Level-3-260C-168 HR	-40 to 85	F6734
MSP430F6734IPZ.B	Active	Production	LQFP (PZ) | 100	90 | JEDEC TRAY (10+1)	Yes	NIPDAU	Level-3-260C-168 HR	-40 to 85	F6734
MSP430F6734IPZR	Active	Production	LQFP (PZ) | 100	1000 | LARGE T&R	Yes	NIPDAU	Level-3-260C-168 HR	-40 to 85	F6734
MSP430F6734IPZR.B	Active	Production	LQFP (PZ) | 100	1000 | LARGE T&R	Yes	NIPDAU	Level-3-260C-168 HR	-40 to 85	F6734
MSP430F6735IPN	Active	Production	LQFP (PN) | 80	119 | JEDEC TRAY (10+1)	Yes	NIPDAU	Level-3-260C-168 HR	-40 to 85	F6735
MSP430F6735IPN.B	Active	Production	LQFP (PN) | 80	119 | JEDEC TRAY (10+1)	Yes	NIPDAU	Level-3-260C-168 HR	-40 to 85	F6735
MSP430F6735IPZ	Active	Production	LQFP (PZ) | 100	90 | JEDEC TRAY (10+1)	Yes	NIPDAU	Level-3-260C-168 HR	-40 to 85	F6735
MSP430F6735IPZ.B	Active	Production	LQFP (PZ) | 100	90 | JEDEC TRAY (10+1)	Yes	NIPDAU	Level-3-260C-168 HR	-40 to 85	F6735
MSP430F6736IPN	Active	Production	LQFP (PN) | 80	119 | JEDEC TRAY (10+1)	Yes	NIPDAU	Level-3-260C-168 HR	-40 to 85	F6736
MSP430F6736IPN.B	Active	Production	LQFP (PN) | 80	119 | JEDEC TRAY (10+1)	Yes	NIPDAU	Level-3-260C-168 HR	-40 to 85	F6736
MSP430F6736IPNR	Active	Production	LQFP (PN) | 80	1000 | LARGE T&R	Yes	NIPDAU	Level-3-260C-168 HR	-40 to 85	F6736
MSP430F6736IPNR.B	Active	Production	LQFP (PN) | 80	1000 | LARGE T&R	Yes	NIPDAU	Level-3-260C-168 HR	-40 to 85	F6736
MSP430F6736IPZ	Active	Production	LQFP (PZ) | 100	90 | JEDEC TRAY (10+1)	Yes	NIPDAU	Level-3-260C-168 HR	-40 to 85	F6736

Orderable part number	Status (1)	Material type (2)	Package | Pins	Package qty | Carrier	RoHS (3)	Lead finish/ Ball material (4)	MSL rating/ Peak reflow (5)	Op temp (°C)	Part marking (6)
MSP430F6736IPZ.B	Active	Production	LQFP (PZ) | 100	90 | JEDEC TRAY (10+1)	Yes	NIPDAU	Level-3-260C-168 HR	-40 to 85	F6736
MSP430F6736IPZR	Active	Production	LQFP (PZ) | 100	1000 | LARGE T&R	Yes	NIPDAU	Level-3-260C-168 HR	-40 to 85	F6736
MSP430F6736IPZR.B	Active	Production	LQFP (PZ) | 100	1000 | LARGE T&R	Yes	NIPDAU	Level-3-260C-168 HR	-40 to 85	F6736
SN0806723IPNR	Active	Production	LQFP (PN) | 80	1000 | LARGE T&R	Yes	NIPDAU	Level-3-260C-168 HR	-40 to 85	F6723

(1) **Status:** For more details on status, see our product life cycle.

(2) **Material type:** When designated, preproduction parts are prototypes/experimental devices, and are not yet approved or released for full production. Testing and final process, including without limitation quality assurance, reliability performance testing, and/or process qualification, may not yet be complete, and this item is subject to further changes or possible discontinuation. If available for ordering, purchases will be subject to an additional waiver at checkout, and are intended for early internal evaluation purposes only. These items are sold without warranties of any kind.

(3) **RoHS values:** Yes, No, RoHS Exempt. See the TI RoHS Statement for additional information and value definition.

(4) **Lead finish/Ball material:** Parts may have multiple material finish options. Finish options are separated by a vertical ruled line. Lead finish/Ball material values may wrap to two lines if the finish value exceeds the maximum column width.

(5) **MSL rating/Peak reflow:** The moisture sensitivity level ratings and peak solder (reflow) temperatures. In the event that a part has multiple moisture sensitivity ratings, only the lowest level per JEDEC standards is shown. Refer to the shipping label for the actual reflow temperature that will be used to mount the part to the printed circuit board.

(6) **Part marking:** There may be an additional marking, which relates to the logo, the lot trace code information, or the environmental category of the part.

Multiple part markings will be inside parentheses. Only one part marking contained in parentheses and separated by a "~" will appear on a part. If a line is indented then it is a continuation of the previous line and the two combined represent the entire part marking for that device.

Important Information and Disclaimer: The information provided on this page represents TI's knowledge and belief as of the date that it is provided. TI bases its knowledge and belief on information provided by third parties, and makes no representation or warranty as to the accuracy of such information. Efforts are underway to better integrate information from third parties. TI has taken and continues to take reasonable steps to provide representative and accurate information but may not have conducted destructive testing or chemical analysis on incoming materials and chemicals. TI and TI suppliers consider certain information to be proprietary, and thus CAS numbers and other limited information may not be available for release.

In no event shall TI's liability arising out of such information exceed the total purchase price of the TI part(s) at issue in this document sold by TI to Customer on an annual basis.

TAPE AND REEL INFORMATION

REEL DIMENSIONS

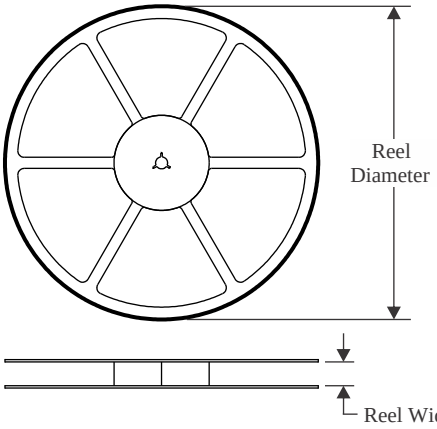

TAPE DIMENSIONS

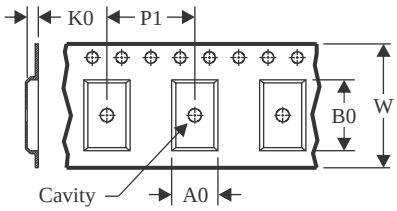

A0	Dimension designed to accommodate the component width
B0	Dimension designed to accommodate the component length
K0	Dimension designed to accommodate the component thickness
W	Overall width of the carrier tape
P1	Pitch between successive cavity centers

QUADRANT ASSIGNMENTS FOR PIN 1 ORIENTATION IN TAPE

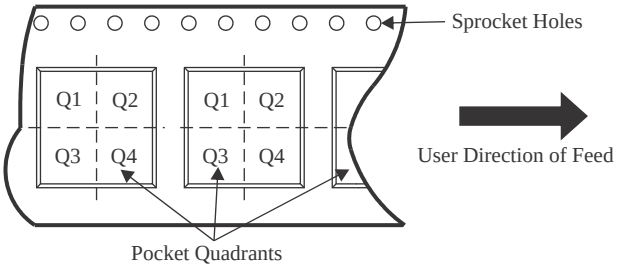

*All dimensions are nominal

Device	Package Type	Package Drawing	Pins	SPQ	Reel Diameter (mm)	Reel Width W1 (mm)	A0 (mm)	B0 (mm)	K0 (mm)	P1 (mm)	W (mm)	Pin1 Quadrant
MSP430F6720IPNR	LQFP	PN	80	1000	330.0	24.4	15.0	15.0	2.1	20.0	24.0	Q2
MSP430F6720IPZR	LQFP	PZ	100	1000	330.0	24.4	17.0	17.0	2.1	20.0	24.0	Q2
MSP430F6721IPNR	LQFP	PN	80	1000	330.0	24.4	15.0	15.0	2.1	20.0	24.0	Q2
MSP430F6721IPZR	LQFP	PZ	100	1000	330.0	24.4	17.0	17.0	2.1	20.0	24.0	Q2
MSP430F6723IPNR	LQFP	PN	80	1000	330.0	24.4	15.0	15.0	2.1	20.0	24.0	Q2
MSP430F6723IPZR	LQFP	PZ	100	1000	330.0	24.4	17.0	17.0	2.1	20.0	24.0	Q2
MSP430F6724IPNR	LQFP	PN	80	1000	330.0	24.4	15.0	15.0	2.1	20.0	24.0	Q2
MSP430F6725IPNR	LQFP	PN	80	1000	330.0	24.4	15.0	15.0	2.1	20.0	24.0	Q2
MSP430F6725IPZR	LQFP	PZ	100	1000	330.0	24.4	17.0	17.0	2.1	20.0	24.0	Q2
MSP430F6726IPNR	LQFP	PN	80	1000	330.0	24.4	15.0	15.0	2.1	20.0	24.0	Q2
MSP430F6726IPNRG4	LQFP	PN	80	1000	330.0	24.4	15.0	15.0	2.1	20.0	24.0	Q2
MSP430F6726IPZR	LQFP	PZ	100	1000	330.0	24.4	17.0	17.0	2.1	20.0	24.0	Q2
MSP430F6730IPNR	LQFP	PN	80	1000	330.0	24.4	15.0	15.0	2.1	20.0	24.0	Q2
MSP430F6731IPNR	LQFP	PN	80	1000	330.0	24.4	15.0	15.0	2.1	20.0	24.0	Q2
MSP430F6733IPNR	LQFP	PN	80	1000	330.0	24.4	15.0	15.0	2.1	20.0	24.0	Q2
MSP430F6733IPZR	LQFP	PZ	100	1000	330.0	24.4	17.0	17.0	2.1	20.0	24.0	Q2

Device	Package Type	Package Drawing	Pins	SPQ	Reel Diameter (mm)	Reel Width W1 (mm)	A0 (mm)	B0 (mm)	K0 (mm)	P1 (mm)	W (mm)	Pin1 Quadrant
MSP430F6734IPNR	LQFP	PN	80	1000	330.0	24.4	15.0	15.0	2.1	20.0	24.0	Q2
MSP430F6734IPZR	LQFP	PZ	100	1000	330.0	24.4	17.0	17.0	2.1	20.0	24.0	Q2
MSP430F6736IPNR	LQFP	PN	80	1000	330.0	24.4	15.0	15.0	2.1	20.0	24.0	Q2
MSP430F6736IPZR	LQFP	PZ	100	1000	330.0	24.4	17.0	17.0	2.1	20.0	24.0	Q2

TAPE AND REEL BOX DIMENSIONS

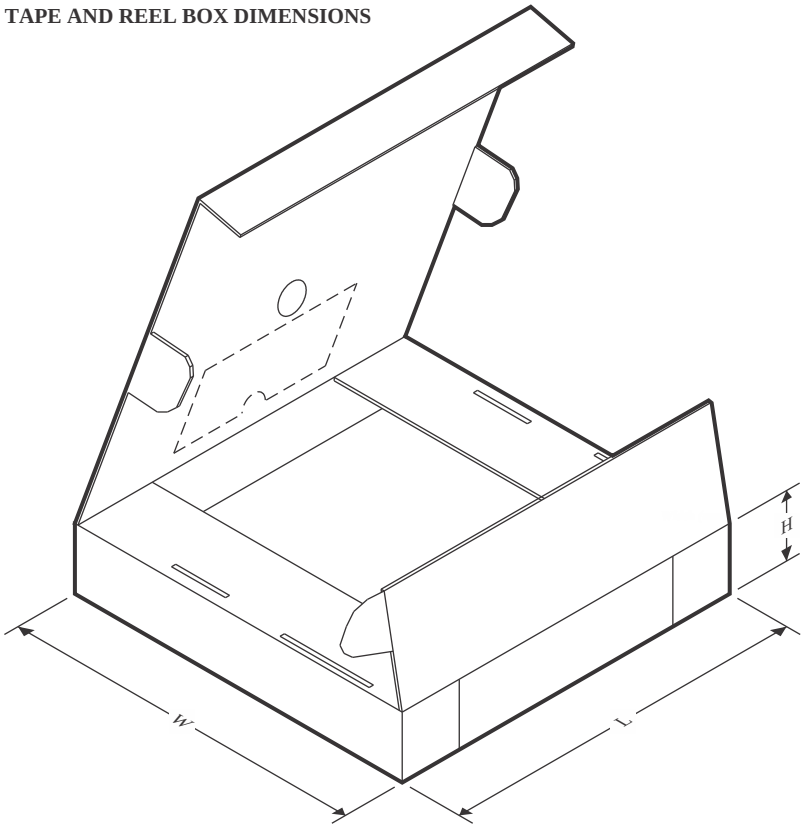

*All dimensions are nominal

Device	Package Type	Package Drawing	Pins	SPQ	Length (mm)	Width (mm)	Height (mm)
MSP430F6720IPNR	LQFP	PN	80	1000	350.0	350.0	43.0
MSP430F6720IPZR	LQFP	PZ	100	1000	350.0	350.0	43.0
MSP430F6721IPNR	LQFP	PN	80	1000	350.0	350.0	43.0
MSP430F6721IPZR	LQFP	PZ	100	1000	350.0	350.0	43.0
MSP430F6723IPNR	LQFP	PN	80	1000	350.0	350.0	43.0
MSP430F6723IPZR	LQFP	PZ	100	1000	350.0	350.0	43.0
MSP430F6724IPNR	LQFP	PN	80	1000	350.0	350.0	43.0
MSP430F6725IPNR	LQFP	PN	80	1000	350.0	350.0	43.0
MSP430F6725IPZR	LQFP	PZ	100	1000	350.0	350.0	43.0
MSP430F6726IPNR	LQFP	PN	80	1000	350.0	350.0	43.0
MSP430F6726IPNRG4	LQFP	PN	80	1000	350.0	350.0	43.0
MSP430F6726IPZR	LQFP	PZ	100	1000	350.0	350.0	43.0
MSP430F6730IPNR	LQFP	PN	80	1000	350.0	350.0	43.0
MSP430F6731IPNR	LQFP	PN	80	1000	350.0	350.0	43.0
MSP430F6733IPNR	LQFP	PN	80	1000	367.0	367.0	45.0
MSP430F6733IPZR	LQFP	PZ	100	1000	350.0	350.0	43.0
MSP430F6734IPNR	LQFP	PN	80	1000	350.0	350.0	43.0
MSP430F6734IPZR	LQFP	PZ	100	1000	350.0	350.0	43.0

Device	Package Type	Package Drawing	Pins	SPQ	Length (mm)	Width (mm)	Height (mm)
MSP430F6736IPNR	LQFP	PN	80	1000	350.0	350.0	43.0
MSP430F6736IPZR	LQFP	PZ	100	1000	350.0	350.0	43.0

TRAY

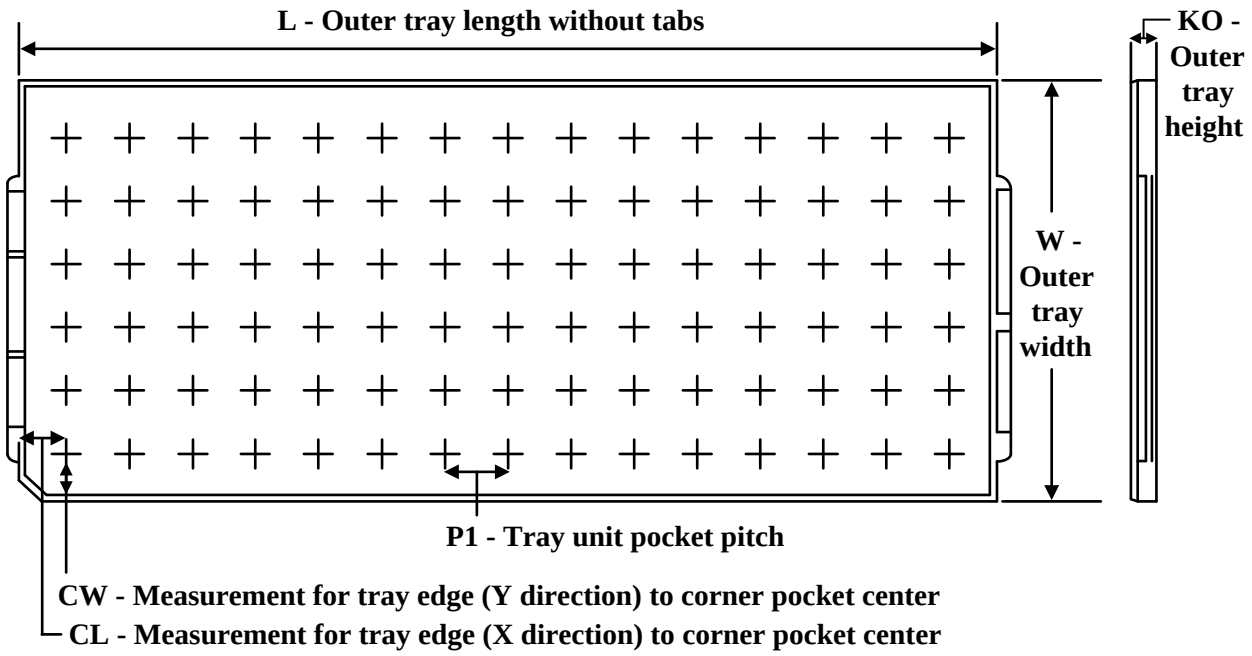

Chamfer on Tray corner indicates Pin 1 orientation of packed units.

*All dimensions are nominal

Device	Package Name	Package Type	Pins	SPQ	Unit array matrix	Max temperature (°C)	L (mm)	W (mm)	K0 (µm)	P1 (mm)	CL (mm)	CW (mm)
MSP430F6720IPN	PN	LQFP	80	119	7 x 17	150	315	135.9	7620	17.9	14.3	13.95
MSP430F6720IPN.B	PN	LQFP	80	119	7 x 17	150	315	135.9	7620	17.9	14.3	13.95
MSP430F6720IPZ	PZ	LQFP	100	90	6 x 15	150	315	135.9	7620	20.3	15.4	15.45
MSP430F6720IPZ.B	PZ	LQFP	100	90	6 x 15	150	315	135.9	7620	20.3	15.4	15.45
MSP430F6721IPN	PN	LQFP	80	119	7 x 17	150	315	135.9	7620	17.9	14.3	13.95
MSP430F6721IPN.B	PN	LQFP	80	119	7 x 17	150	315	135.9	7620	17.9	14.3	13.95
MSP430F6721IPZ	PZ	LQFP	100	90	6 x 15	150	315	135.9	7620	20.3	15.4	15.45
MSP430F6721IPZ.B	PZ	LQFP	100	90	6 x 15	150	315	135.9	7620	20.3	15.4	15.45
MSP430F6723IPN	PN	LQFP	80	119	7 x 17	150	315	135.9	7620	17.9	14.3	13.95
MSP430F6723IPN.B	PN	LQFP	80	119	7 x 17	150	315	135.9	7620	17.9	14.3	13.95
MSP430F6723IPZ	PZ	LQFP	100	90	6 x 15	150	315	135.9	7620	20.3	15.4	15.45
MSP430F6723IPZ.B	PZ	LQFP	100	90	6 x 15	150	315	135.9	7620	20.3	15.4	15.45
MSP430F6724IPN	PN	LQFP	80	119	7 x 17	150	315	135.9	7620	17.9	14.3	13.95
MSP430F6724IPN.B	PN	LQFP	80	119	7 x 17	150	315	135.9	7620	17.9	14.3	13.95
MSP430F6724IPZ	PZ	LQFP	100	90	6 x 15	150	315	135.9	7620	20.3	15.4	15.45
MSP430F6724IPZ.B	PZ	LQFP	100	90	6 x 15	150	315	135.9	7620	20.3	15.4	15.45
MSP430F6725IPN	PN	LQFP	80	119	7 x 17	150	315	135.9	7620	17.9	14.3	13.95

Device	Package Name	Package Type	Pins	SPQ	Unit array matrix	Max temperature (°C)	L (mm)	W (mm)	K0 (µm)	P1 (mm)	CL (mm)	CW (mm)
MSP430F6725IPN.B	PN	LQFP	80	119	7 x 17	150	315	135.9	7620	17.9	14.3	13.95
MSP430F6725IPZ	PZ	LQFP	100	90	6 x 15	150	315	135.9	7620	20.3	15.4	15.45
MSP430F6725IPZ.B	PZ	LQFP	100	90	6 x 15	150	315	135.9	7620	20.3	15.4	15.45
MSP430F6726IPN	PN	LQFP	80	119	7 x 17	150	315	135.9	7620	17.9	14.3	13.95
MSP430F6726IPN.B	PN	LQFP	80	119	7 x 17	150	315	135.9	7620	17.9	14.3	13.95
MSP430F6726IPZ	PZ	LQFP	100	90	6 x 15	150	315	135.9	7620	20.3	15.4	15.45
MSP430F6726IPZ.B	PZ	LQFP	100	90	6 x 15	150	315	135.9	7620	20.3	15.4	15.45
MSP430F6730IPN	PN	LQFP	80	119	7 x 17	150	315	135.9	7620	17.9	14.3	13.95
MSP430F6730IPN.B	PN	LQFP	80	119	7 x 17	150	315	135.9	7620	17.9	14.3	13.95
MSP430F6730IPZ	PZ	LQFP	100	90	6 x 15	150	315	135.9	7620	20.3	15.4	15.45
MSP430F6730IPZ.B	PZ	LQFP	100	90	6 x 15	150	315	135.9	7620	20.3	15.4	15.45
MSP430F6731IPN	PN	LQFP	80	119	7 x 17	150	315	135.9	7620	17.9	14.3	13.95
MSP430F6731IPN.B	PN	LQFP	80	119	7 x 17	150	315	135.9	7620	17.9	14.3	13.95
MSP430F6733IPN	PN	LQFP	80	119	7 x 17	150	315	135.9	7620	17.9	14.3	13.95
MSP430F6733IPN.B	PN	LQFP	80	119	7 x 17	150	315	135.9	7620	17.9	14.3	13.95
MSP430F6733IPZ	PZ	LQFP	100	90	6 x 15	150	315	135.9	7620	20.3	15.4	15.45
MSP430F6733IPZ.B	PZ	LQFP	100	90	6 x 15	150	315	135.9	7620	20.3	15.4	15.45
MSP430F6734IPN	PN	LQFP	80	119	7 x 17	150	315	135.9	7620	17.9	14.3	13.95
MSP430F6734IPN.B	PN	LQFP	80	119	7 x 17	150	315	135.9	7620	17.9	14.3	13.95
MSP430F6734IPZ	PZ	LQFP	100	90	6 x 15	150	315	135.9	7620	20.3	15.4	15.45
MSP430F6734IPZ.B	PZ	LQFP	100	90	6 x 15	150	315	135.9	7620	20.3	15.4	15.45
MSP430F6735IPN	PN	LQFP	80	119	7 x 17	150	315	135.9	7620	17.9	14.3	13.95
MSP430F6735IPN.B	PN	LQFP	80	119	7 x 17	150	315	135.9	7620	17.9	14.3	13.95
MSP430F6735IPZ	PZ	LQFP	100	90	6 x 15	150	315	135.9	7620	20.3	15.4	15.45
MSP430F6735IPZ.B	PZ	LQFP	100	90	6 x 15	150	315	135.9	7620	20.3	15.4	15.45
MSP430F6736IPN	PN	LQFP	80	119	7 x 17	150	315	135.9	7620	17.9	14.3	13.95
MSP430F6736IPN.B	PN	LQFP	80	119	7 x 17	150	315	135.9	7620	17.9	14.3	13.95
MSP430F6736IPZ	PZ	LQFP	100	90	6 x 15	150	315	135.9	7620	20.3	15.4	15.45
MSP430F6736IPZ.B	PZ	LQFP	100	90	6 x 15	150	315	135.9	7620	20.3	15.4	15.45

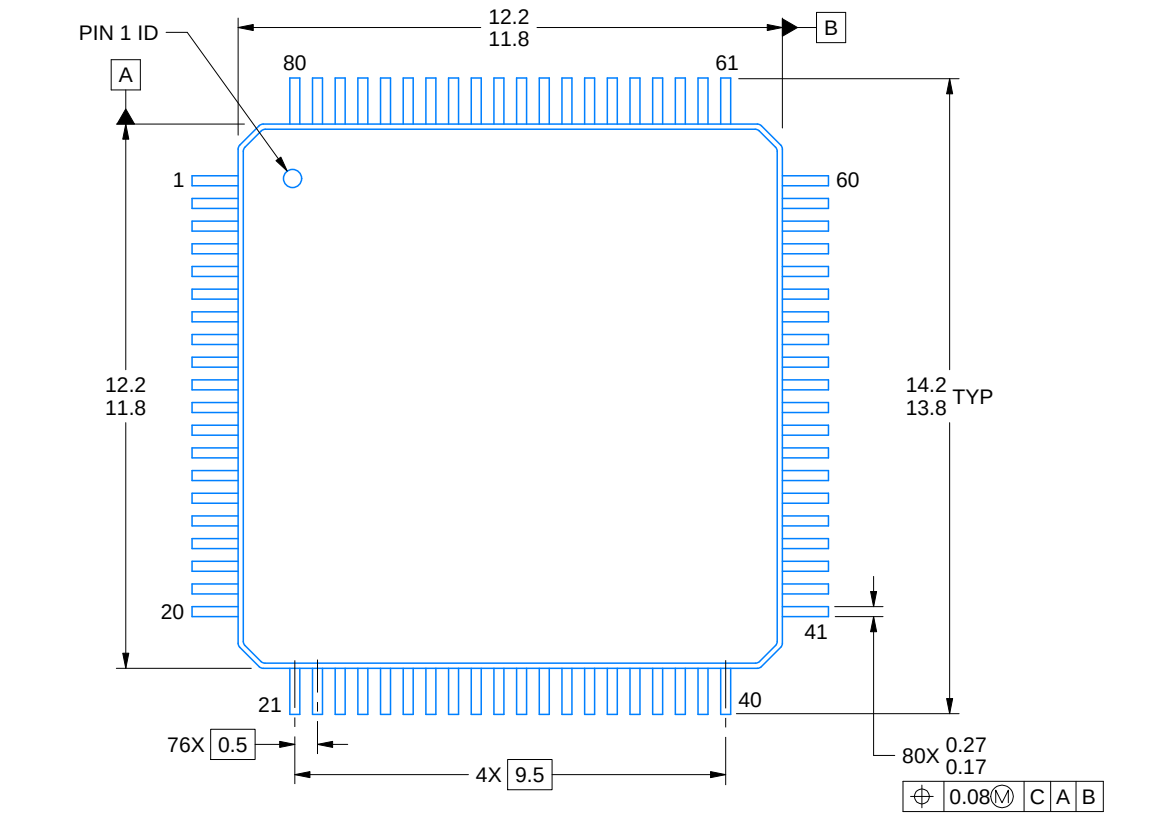

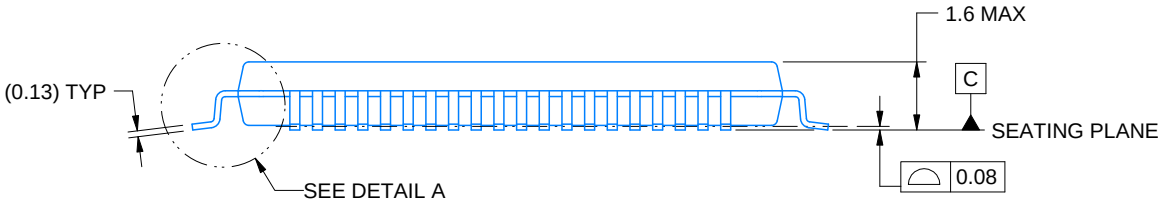

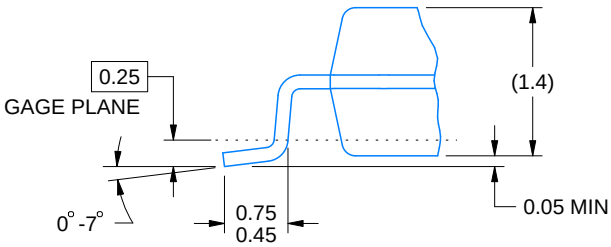

DETAIL A
TYPICAL

4215166/A 08/2022

NOTES:

1. All linear dimensions are in millimeters. Any dimensions in parenthesis are for reference only. Dimensioning and tolerancing per ASME Y14.5M.
2. This drawing is subject to change without notice.
3. Reference JEDEC registration MS-026.

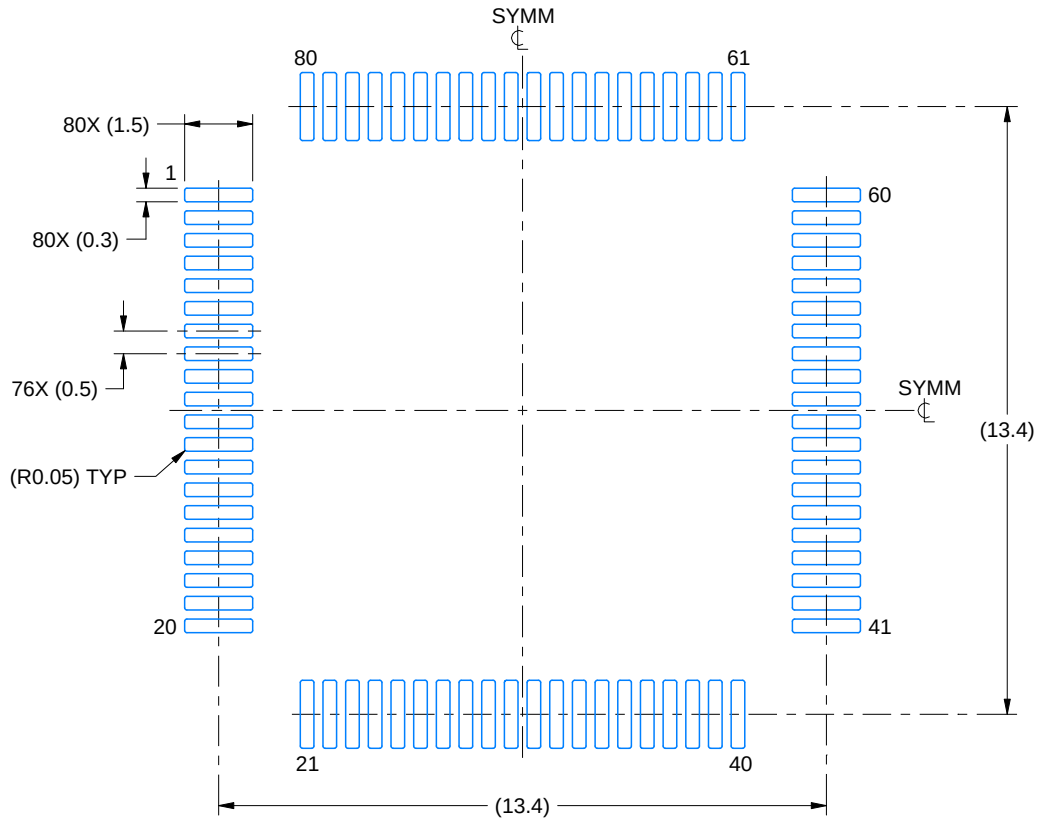

LAND PATTERN EXAMPLE
EXPOSED METAL SHOWN
SCALE:6X

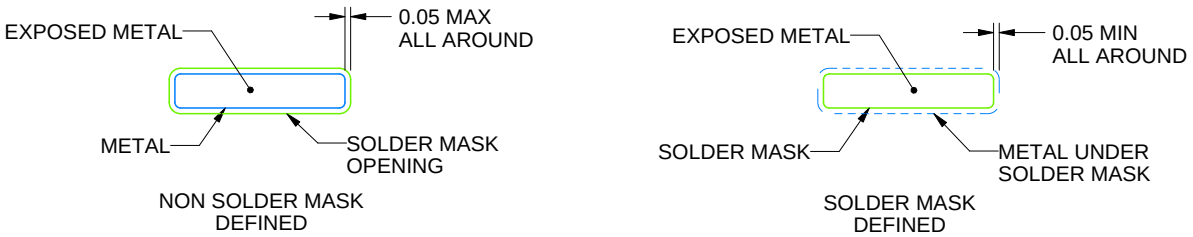

SOLDER MASK DETAILS

4215166/A 08/2022

NOTES: (continued)

4. Publication IPC-7351 may have alternate designs.
5. Solder mask tolerances between and around signal pads can vary based on board fabrication site.
6. For more information, see Texas Instruments literature number SLMA004 (www.ti.com/lit/slma004).

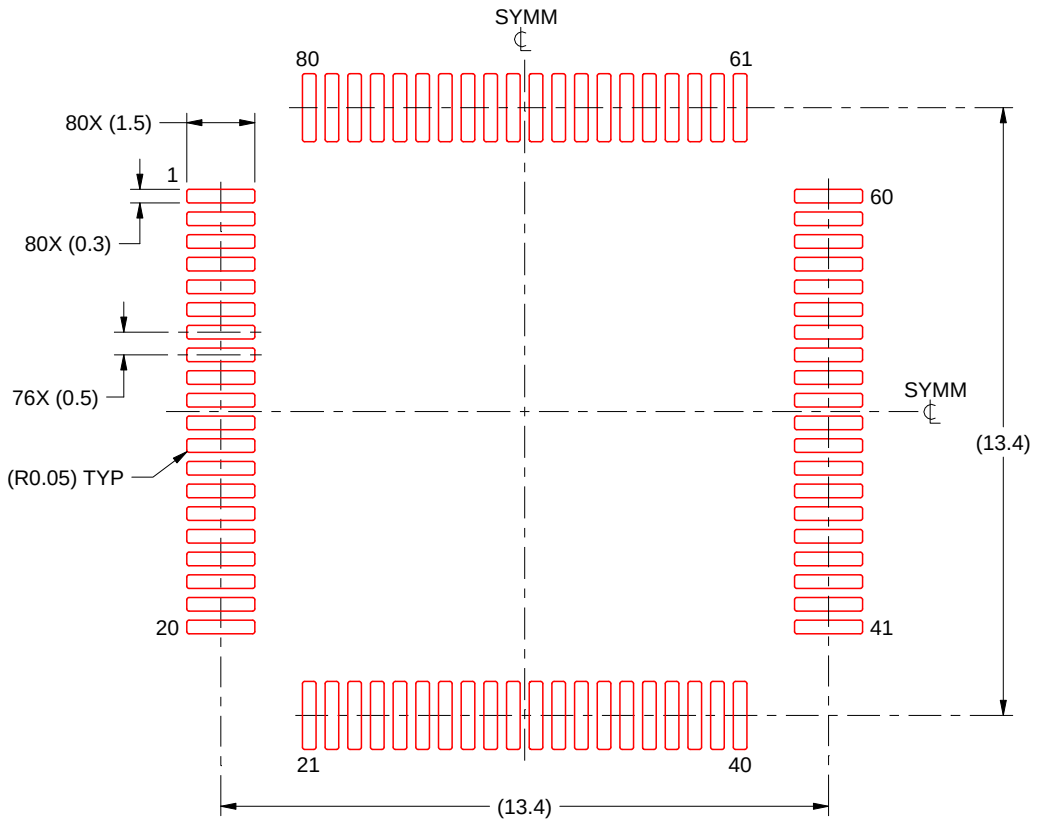

SOLDER PASTE EXAMPLE
BASED ON 0.1 mm THICK STENCIL
SCALE:6X

4215166/A 08/2022

NOTES: (continued)

7. Laser cutting apertures with trapezoidal walls and rounded corners may offer better paste release. IPC-7525 may have alternate design recommendations.
8. Board assembly site may have different recommendations for stencil design.

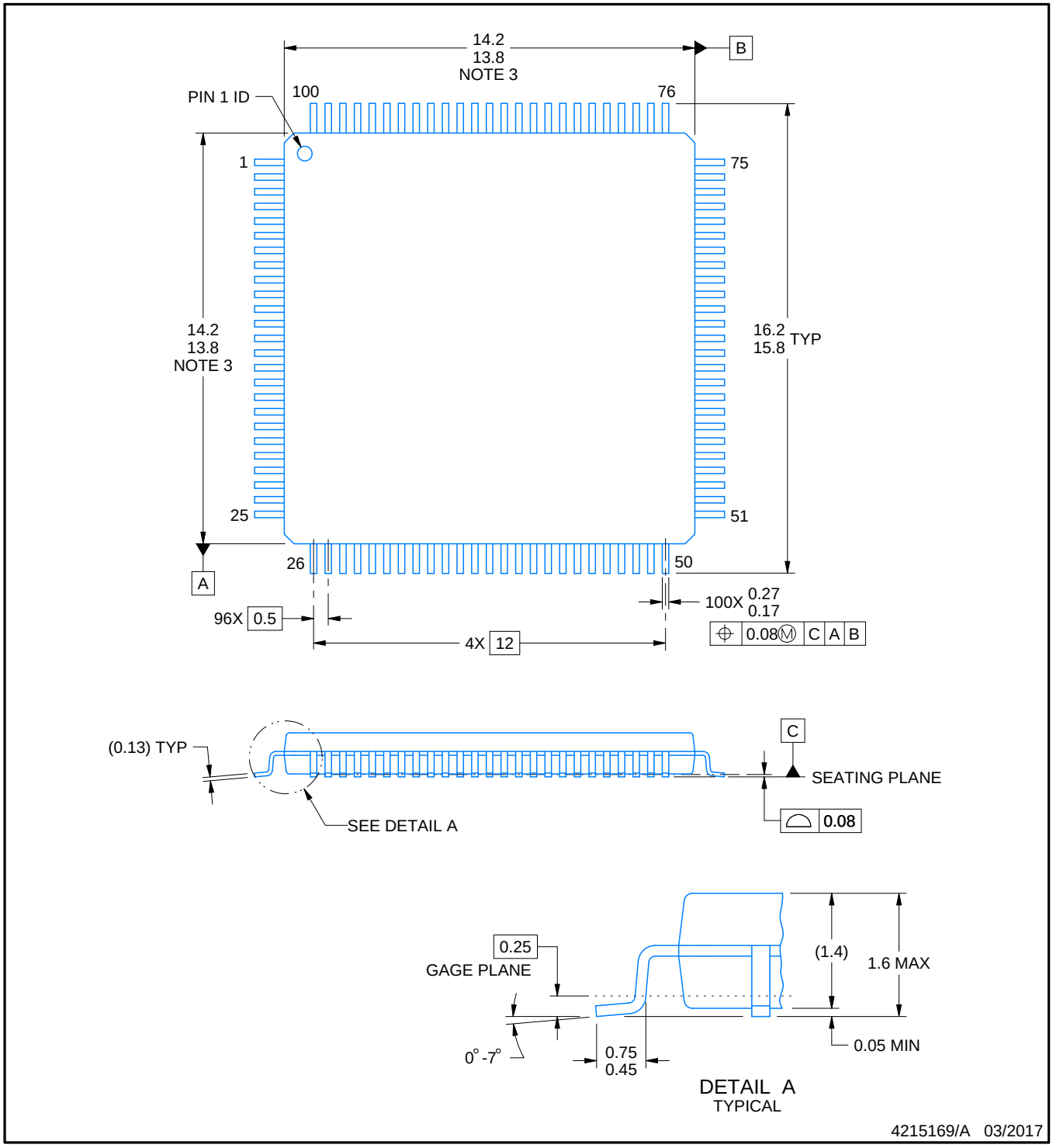

NOTES:

1. All linear dimensions are in millimeters. Any dimensions in parenthesis are for reference only. Dimensioning and tolerancing per ASME Y14.5M.
2. This drawing is subject to change without notice.
3. This dimension does not include mold flash, protrusions, or gate burrs. Mold flash, protrusions, or gate burrs shall not exceed 0.15 mm per side.
4. Reference JEDEC registration MS-026.

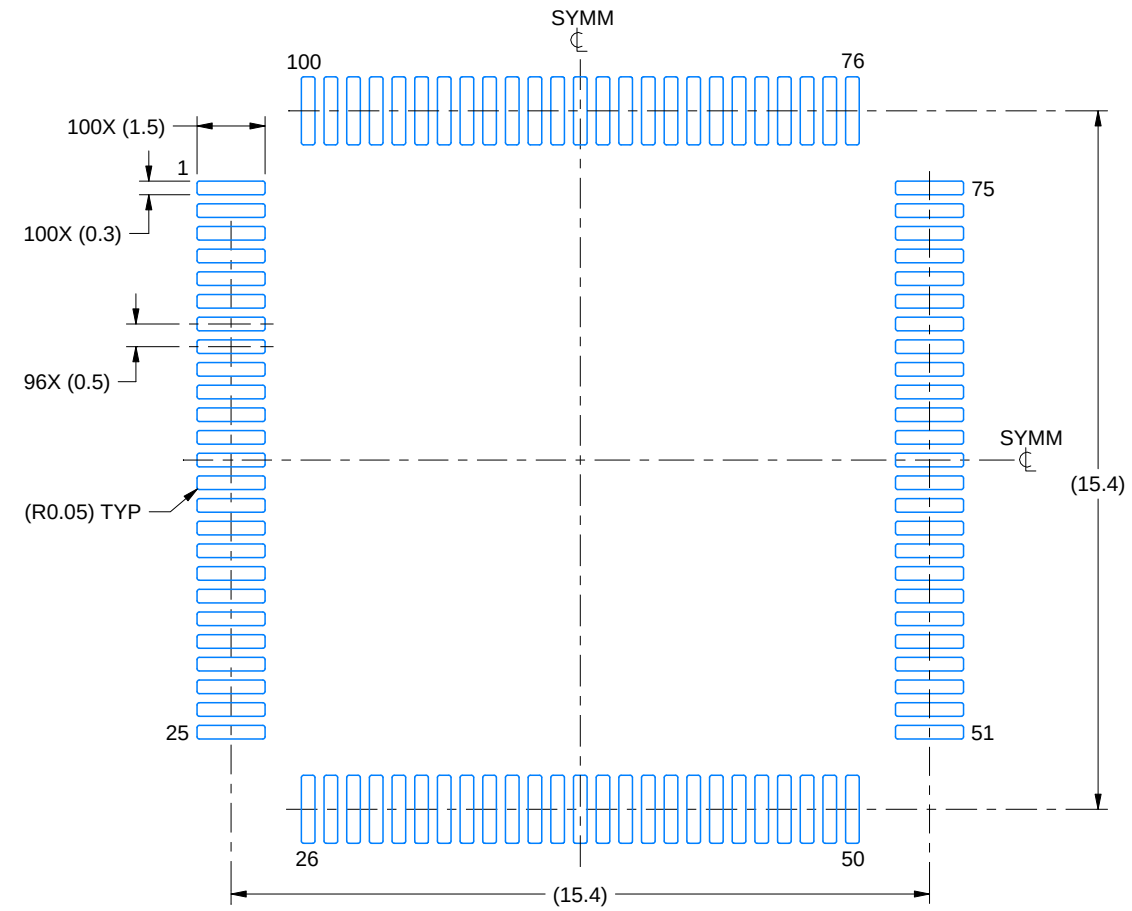

LAND PATTERN EXAMPLE
EXPOSED METAL SHOWN
SCALE:6X

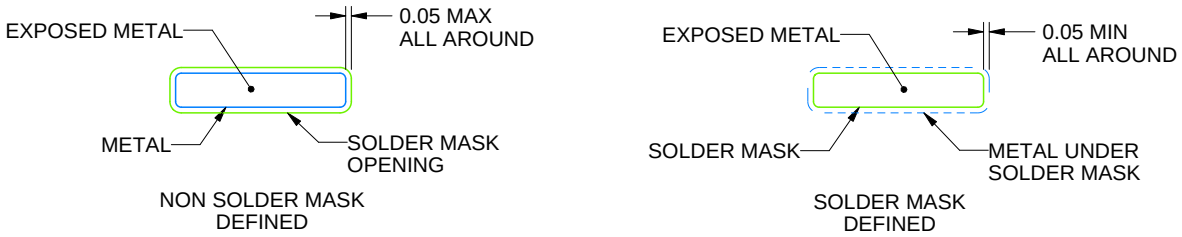

SOLDER MASK DETAILS

4215169/A 03/2017

NOTES: (continued)

5. Publication IPC-7351 may have alternate designs.
6. Solder mask tolerances between and around signal pads can vary based on board fabrication site.
7. For more information, see Texas Instruments literature number SLMA004 (www.ti.com/lit/slma004).

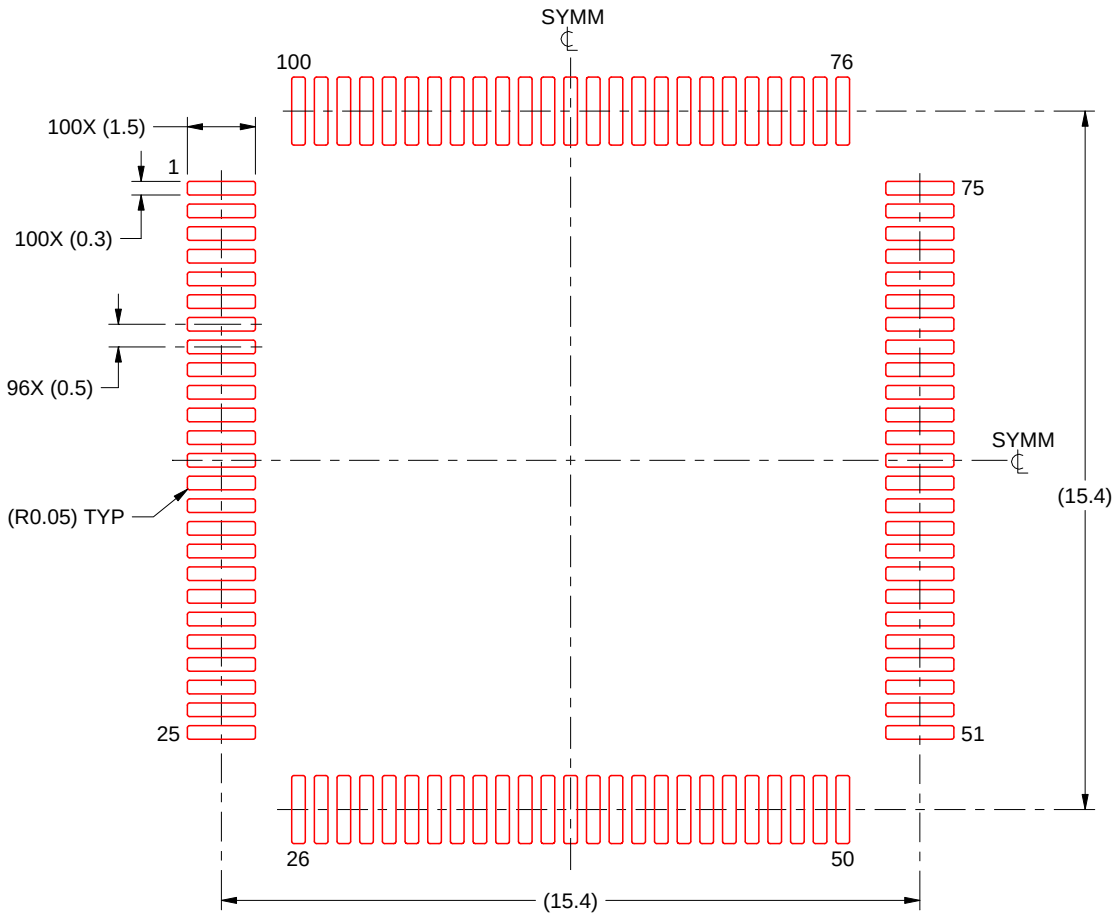

SOLDER PASTE EXAMPLE
BASED ON 0.125 mm THICK STENCIL
SCALE:6X

4215169/A 03/2017

NOTES: (continued)

8. Laser cutting apertures with trapezoidal walls and rounded corners may offer better paste release. IPC-7525 may have alternate design recommendations.
9. Board assembly site may have different recommendations for stencil design.

IMPORTANT NOTICE AND DISCLAIMER

TI PROVIDES TECHNICAL AND RELIABILITY DATA (INCLUDING DATA SHEETS), DESIGN RESOURCES (INCLUDING REFERENCE DESIGNS), APPLICATION OR OTHER DESIGN ADVICE, WEB TOOLS, SAFETY INFORMATION, AND OTHER RESOURCES “AS IS” AND WITH ALL FAULTS, AND DISCLAIMS ALL WARRANTIES, EXPRESS AND IMPLIED, INCLUDING WITHOUT LIMITATION ANY IMPLIED WARRANTIES OF MERCHANTABILITY, FITNESS FOR A PARTICULAR PURPOSE OR NON-INFRINGEMENT OF THIRD PARTY INTELLECTUAL PROPERTY RIGHTS.

These resources are intended for skilled developers designing with TI products. You are solely responsible for (1) selecting the appropriate TI products for your application, (2) designing, validating and testing your application, and (3) ensuring your application meets applicable standards, and any other safety, security, regulatory or other requirements.

These resources are subject to change without notice. TI grants you permission to use these resources only for development of an application that uses the TI products described in the resource. Other reproduction and display of these resources is prohibited. No license is granted to any other TI intellectual property right or to any third party intellectual property right. TI disclaims responsibility for, and you will fully indemnify TI and its representatives against, any claims, damages, costs, losses, and liabilities arising out of your use of these resources.

TI’s products are provided subject to TI’s Terms of Sale or other applicable terms available either on ti.com or provided in conjunction with such TI products. TI’s provision of these resources does not expand or otherwise alter TI’s applicable warranties or warranty disclaimers for TI products.

TI objects to and rejects any additional or different terms you may have proposed.

Mailing Address: Texas Instruments, Post Office Box 655303, Dallas, Texas 75265
Copyright © 2025, Texas Instruments Incorporated