TEXAS INSTRUMENTS
Data sheet acquired from Harris Semiconductor
SCHS078C -- Revised October 2003

CD4521B Types

CMOS 24-Stage Frequency Divider

High-Voltage Types (20-Volt Rating)

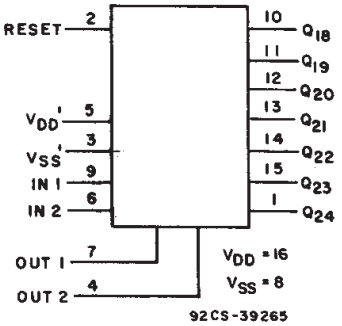

FUNCTIONAL DIAGRAM

Features:

- *Reset disables the RC oscillator for low-power standby condition*
- *V_{DD}' and V_{SS}' pins are brought out from the crystal oscillator to allow use of external resistors for low-power operation*
- *Maximum input current of 1 µA at 18 V over full package-temperature range: 100 nA at 18 V and 25°C*
- *Common reset*
- *100% tested for 20-V quiescent current*
- *5, 10 and 15 V parametric ratings*
- *Standardized symmetrical output characteristics*
- *Meets all requirements of JEDEC Standard No. 13B, "Standard Specifications for Description of 'B' Series CMOS Devices"*

■ CD4521B consists of an oscillator section and 24 ripple-carry binary counter stages. The oscillator configuration (using IN1) allows design of either RC or crystal oscillator circuits. IN1 should be tied either HIGH or LOW when not in use. A HIGH on the RESET causes the counter to go to the all-0's state and disables the oscillator. The count is advanced on the negative transition of IN1 (and IN2). A time-saving test mode is described in the Functional Test Sequence Table and in Fig. 6.

The CD4521B types are supplied in 16-lead dual-in-line plastic packages (E suffix), 16-lead small-outline packages (M, M96, MT, and NSR suffixes), and 16-lead thin shrink small-outline packages (PW and PWR suffixes).

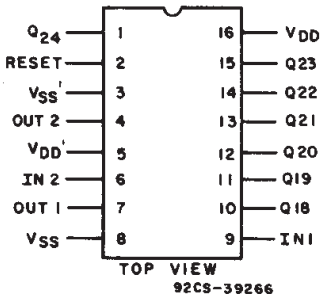

TERMINAL ASSIGNMENT

OUTPUT	COUNT CAPACITY
Q18	2^{18} = 262,144
Q19	2^{19} = 524,288
Q20	2^{20} = 1,048,576
Q21	2^{21} = 2,097,152
Q22	2^{22} = 4,194,304
Q23	2^{23} = 8,388,608
Q24	2^{24} = 16,777,216

MAXIMUM RATINGS, *Absolute-Maximum Values:*

DC SUPPLY-VOLTAGE RANGE, (V_{DD})
(Voltages referenced to V_{SS} Terminal) ..... -0.5V to +20V
INPUT VOLTAGE RANGE, ALL INPUTS ..... -0.5V to V_{DD} +0.5V
DC INPUT CURRENT, ANY ONE INPUT ..... ±10mA
POWER DISSIPATION PER PACKAGE (P_D):
For T_A = -55°C to +100°C 500mW
For T_A = +100°C to +125°C ..... Derate Linearity at 12mW/°C to 200mW
DEVICE DISSIPATION PER OUTPUT TRANSISTOR
FOR T_A = FULL PACKAGE-TEMPERATURE RANGE (All Package Types) 100mW
OPERATING-TEMPERATURE RANGE (T_A) ..... -55°C to +125°C
STORAGE TEMPERATURE RANGE (T_{stg}) ..... -65°C to +150°C
LEAD TEMPERATURE (DURING SOLDERING):
At distance 1/16 ± 1/32 inch (1.59 ± 0.79mm) from case for 10s max ..... +265°C

Copyright © 2003, Texas Instruments Incorporated

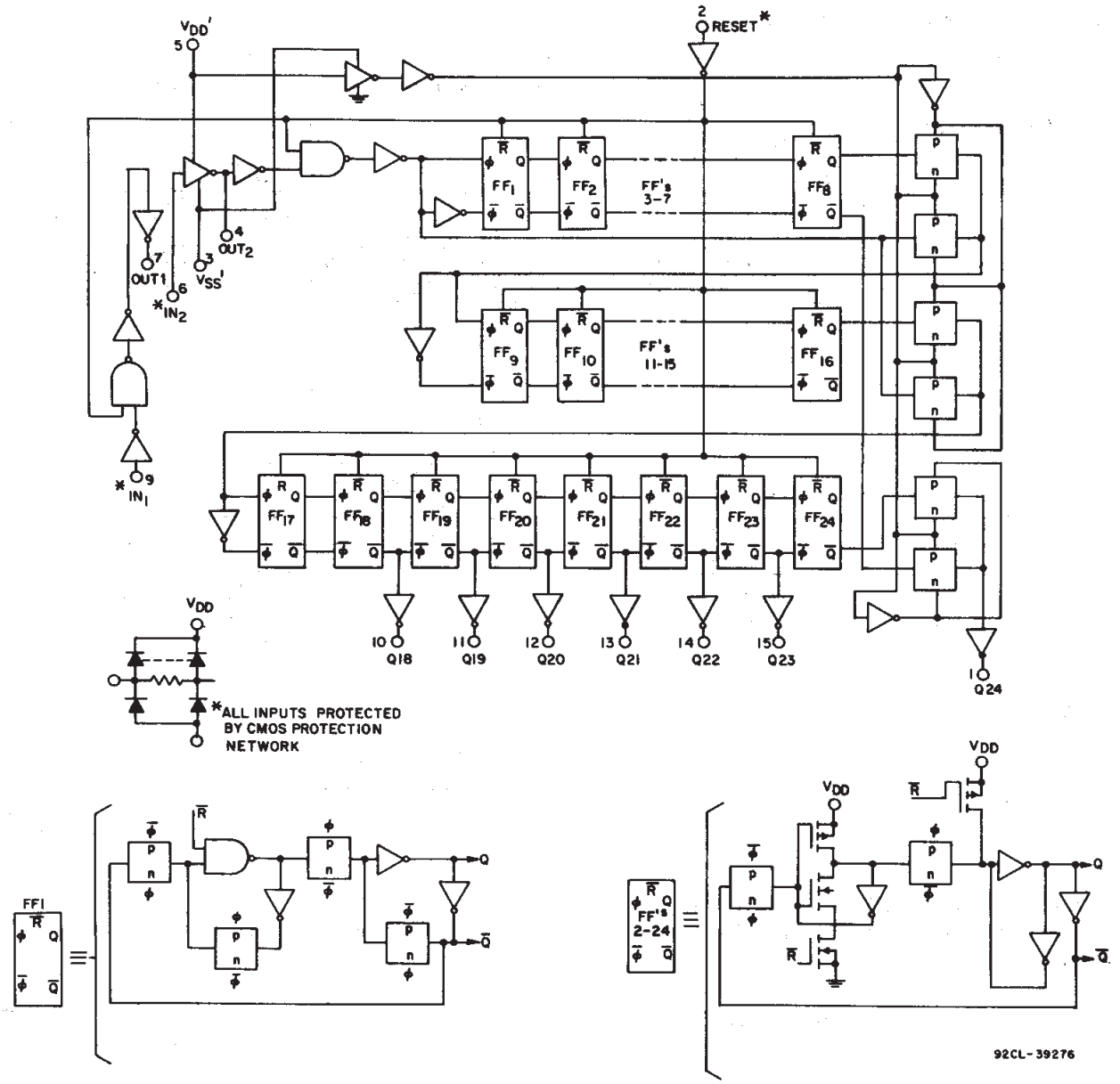

Fig. 1 - Logic diagram for CD4521B.

STATIC ELECTRICAL CHARACTERISTICS

CHARACTERISTIC	CONDITIONS			LIMITS AT INDICATED TEMPERATURES (°C)							UNITS
	V_O (V)	V_{IN} (V)	V_{DD} (V)	-55	-40	+85	+125	+25 Min.	+25 Typ.	+25 Max.	
Quiescent Device Current, I_{DD} Max.	—	0, 5	5	5	5	150	150	—	0.04	5	μA
	—	0, 10	10	10	10	300	300	—	0.04	10	
	—	0, 15	15	20	20	600	600	—	0.04	20	
	—	0, 20	20	100	100	3000	3000	—	0.08	100	
Output Low (Sink) Current, I_{OL} Min.	0.4	0, 5	5	0.64	0.61	0.42	0.36	0.51	1	—	mA
	0.5	0, 10	10	1.6	1.5	1.1	0.9	1.3	2.6	—	
	1.5	0, 15	15	4.2	4	2.8	2.4	3.4	6.8	—	
Output High (Source) Current, I_{OH} Min.	4.6	0, 5	5	-0.64	-0.61	-0.42	-0.36	-0.51	-1	—	
	2.5	0, 5	5	-2	-1.8	-1.3	-1.15	-1.6	-3.2	—	
	9.5	0, 10	10	-1.6	-1.5	-1.1	-0.9	-1.3	-2.6	—	
	13.5	0, 15	15	-4.2	-4	-2.8	-2.4	-3.4	-6.8	—	
Output Voltage: Low-Level, V_{OL} Max.	—	0, 5	5	0.05				—	0	0.05	V
	—	0, 10	10	0.05				—	0	0.05	
	—	0, 15	15	0.05				—	0	0.05	
Output Voltage: High-Level, V_{OH} Min.	—	0, 5	5	4.95				4.95	5	—	
	—	0, 10	10	9.95				9.95	10	—	
	—	0, 15	15	14.95				14.95	15	—	
Input Low Voltage, V_{IL} Max.	0.5,4.5	—	5	1.5				—	—	1.5	
	1, 9	—	10	3				—	—	3	
	1.5,13.5	—	15	4				—	—	4	
Input High Voltage, V_{IH} Min.	0.5,4.5	—	5	3.5				3.5	—	—	
	1, 9	—	10	7				7	—	—	
	1.5,13.5	—	15	11				11	—	—	
Input Current, I_{IN} Max.	—	0, 18	18	±0.1	±0.1	±1	±1	—	$\pm 10^{-5}$	±0.1	μA

RECOMMENDED OPERATING CONDITIONS

For maximum reliability, nominal operating conditions should be selected so that operating is always within the following ranges:

CHARACTERISTIC		V_{DD} (V)	LIMITS Min.	LIMITS Max.	UNITS
Supply-Voltage Range (For T_A = Full Package-Temperature Range)		—	3	18	V
Input Pulse Width	$t_{w\phi}$	5	340	—	ns
		10	150	—	
		15	120	—	
Reset Pulse Width	$t_{w(R)}$	5	180	—	
		10	80	—	
		15	50	—	
Input Pulse Frequency	$f\phi$	5	—	2	MHz
		10	—	5	
		15	—	6.5	
Input Pulse Rise or Fall Time	$t_r\phi, t_f\phi$	5	—	15	μs
		10	—	15	
		15	—	15	
R_T Operating Range		5	1K	10M	Ω
		10	1K	10M	
		15	1K	10M	
C_T Operating Range		5	15p	10M	F
		10	15p	10M	
		15	15p	10M	

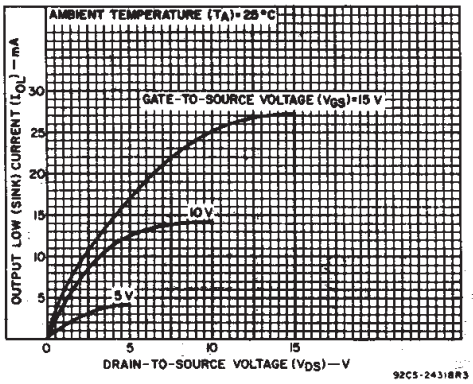

Fig. 2 - Typical output low (sink) current characteristics.

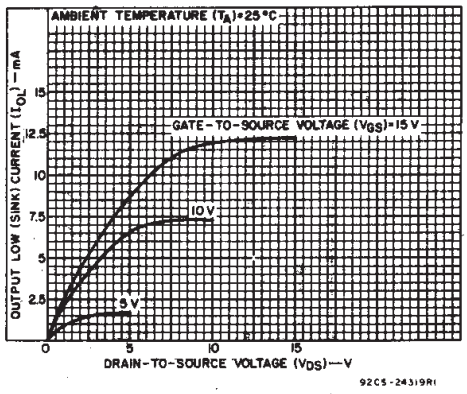

Fig. 3 - Minimum output low (sink) current characteristics.

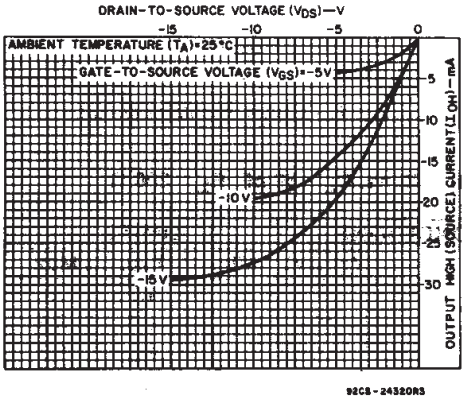

Fig. 4 - Typical output high (source) current characteristics.

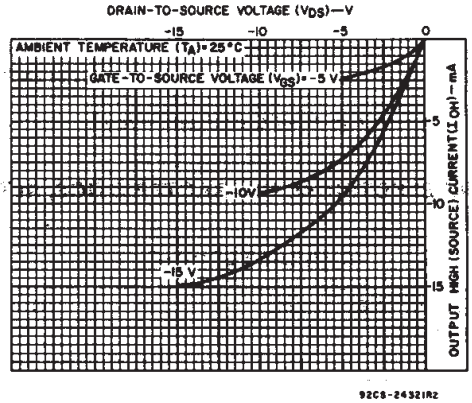

Fig. 5 - Minimum output high (source) current characteristics.

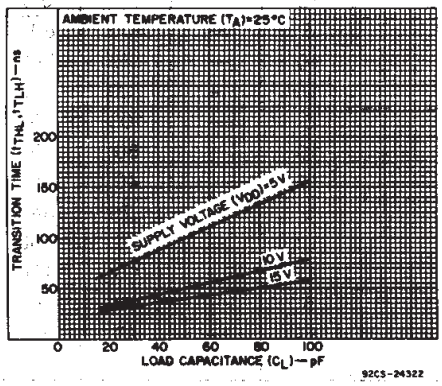

Fig. 6 - Typical transition time as a function of load capacitance.

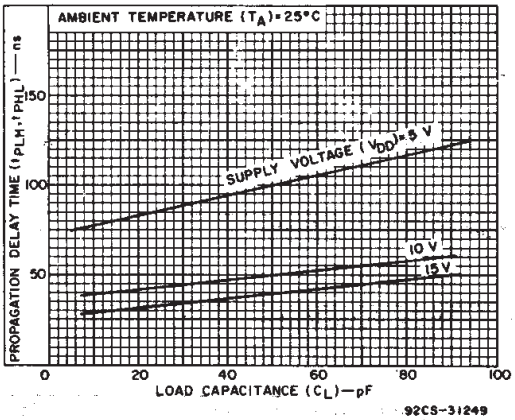

Fig. 7 - Typical propagation delay time (Q_n to $Q_n + 1$) as a function of load capacitance.

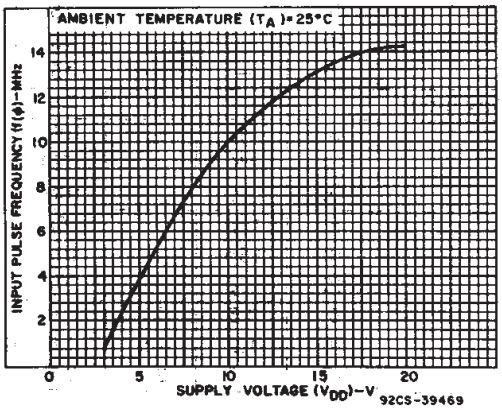

Fig. 8 - Typical maximum input pulse frequency vs. supply voltage.

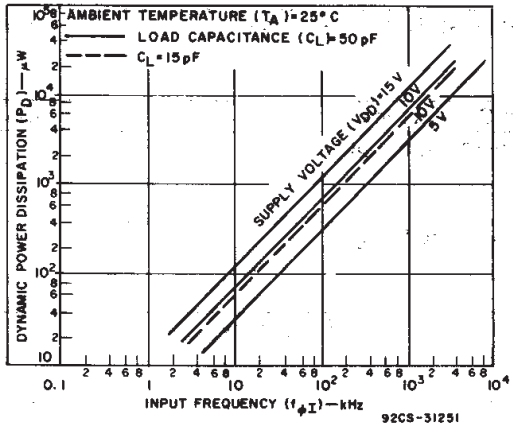

Fig. 9 - Typical dynamic power dissipation as a function of input frequency.

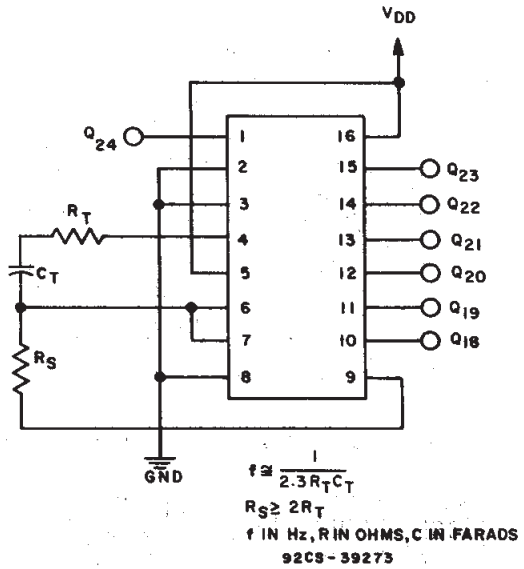

Fig. 10 - RC oscillator circuit.

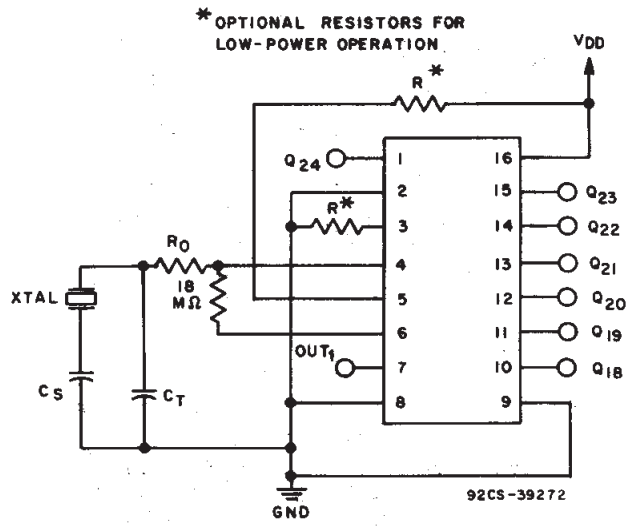

Fig. 11 - Crystal oscillator circuit.

DYNAMIC ELECTRICAL CHARACTERISTICS, At T_A = 25° C; Input t_r,t_f = 20 ns, C_L = 50 pF, R_L = 200 Ω

CHARACTERISTIC		TEST CONDITIONS	LIMITS				UNITS
			V_{DD}(V)	Min.	Typ.	Max.	
Propagation Delay Time: Input to Q18	t_{PLH}, t_{PHL}		5	—	4.5	9	μs
			10	—	1.7	3.5	
			15	—	1.3	2.7	
Input to Q24			5	—	6	12	
			10	—	2.2	4.5	
			15	—	1.7	3.5	
Reset to Qn			5	—	400	800	ns
			10	—	170	340	
			15	—	120	240	
Transition Time*	t_{THL}, t_{TLH}		5	—	100	200	
			10	—	50	100	
			15	—	40	80	
Minimum Input Pulse Width	$t_{w\phi}$		5	—	170	340	
			10	—	75	150	
			15	—	60	120	
Minimum Reset Pulse Width	$t_{w(R)}$		5	—	90	180	
			10	—	40	80	
			15	—	25	50	
Maximum Input Pulse Frequency	$f\phi$		5	2	4	—	MHz
			10	5	10	—	
			15	6.5	13	—	
Input Pulse Rise or Fall Time	$t_r\phi$, $t_f\phi$		5	—	—	15	μs
			10	—	—	15	
			15	—	—	15	
Input Capacitance	C_{IN}	Any Input		—	5	7.5	pF
R_T Operating Range			5	1K	—	10M	Ω
			10	1K	—	10M	
			15	1K	—	10M	
C_T Operating Range			5	15p	—	10μ	F
			10	15p	—	10μ	
			15	15p	—	10μ	
Maximum Oscillator Frequency		R_T=1 KΩ	5	0.5	0.7	0.9	MHz
		C_T=15 pF	10	1.2	1.5	1.8	
		R_S=30 KΩ	15	1.7	2.1	2.5	

*Not applicable for pin 4 (OUT2).

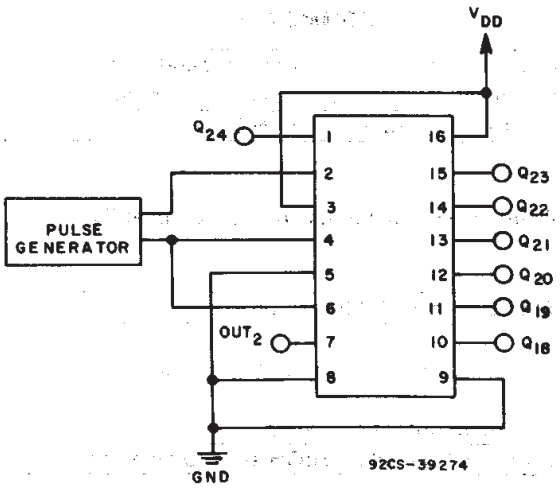

Fig. 12 - Functional test circuit.

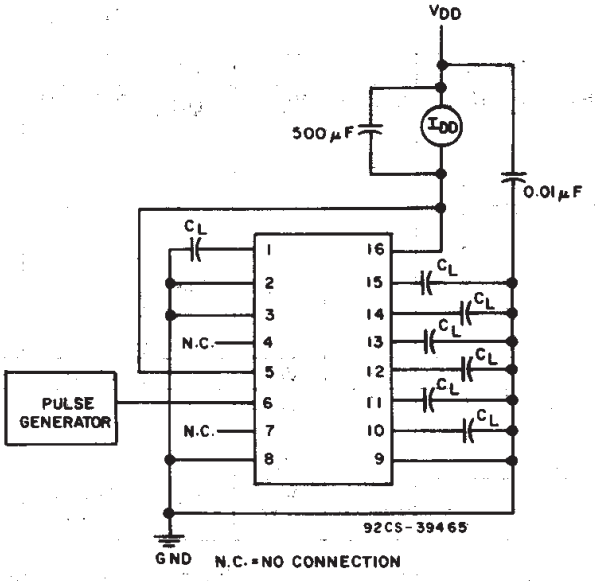

Fig. 13 - Dynamic power dissipation test circuit.

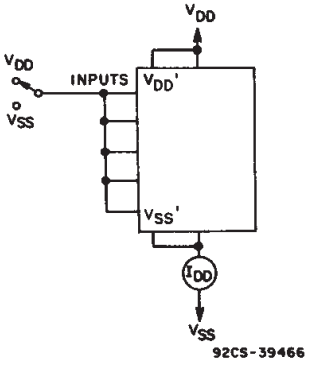

Fig. 14 - Quiescent device current.

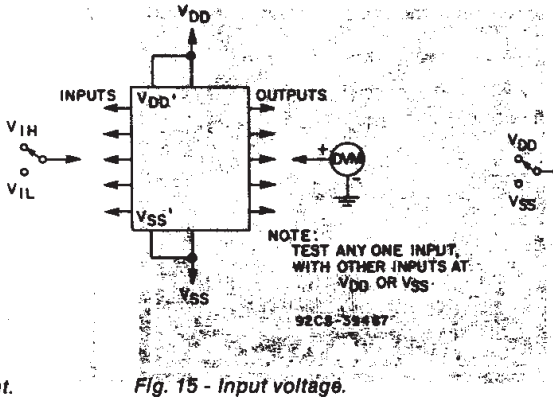

Fig. 15 - Input voltage.

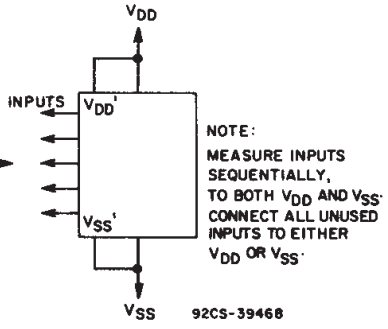

Fig. 16 - Input current.

FUNCTIONAL TEST SEQUENCE

INPUTS		OUTPUTS				COMMENTS
RESET	IN 2	OUT 2	V_{SS}'	V_{DD}'	Q18-Q24	
1	0	0	V_{DD}	V_{SS}	LOW	Counter is in three 8-stage sections in parallel mode. Counter is reset. IN 2 and OUT 2 are tied together.
0	1	1	V_{DD}	V_{SS}		First LOW-to-HIGH transition at IN 2.
0	0 1 — — —	0 1 — — —	V_{DD}	V_{SS}		255 LOW-to-HIGH transitions are clocked in at IN 2.
0	1	1	V_{DD}	V_{SS}	HIGH	The 255th LOW-to-HIGH transition.
0 0 0	0 0 1	0 0 0	V_{DD} V_{SS} V_{SS}	V_{SS} V_{SS} V_{DD}	HIGH HIGH HIGH	Counter is converted back to 24-stage serial-mode operation.
0	1		V_{SS}	V_{DD}	HIGH	OUT 2 reverts to output operation.
0	0		V_{SS}	V_{DD}	LOW	Counter ripples from an all-HIGH state to an all-LOW state.

A test function, which divides, has been included to reduce the time required to test all 24 stages of the counter. Three sections are loaded in parallel to 255 counts, forcing all the outputs to be in the HIGH state. The counter is changed back to serial-mode operation and one additional LOW-to-HIGH transition is entered at IN 2, which causes the outputs to ripple from an all-HIGH state to an all-LOW state.

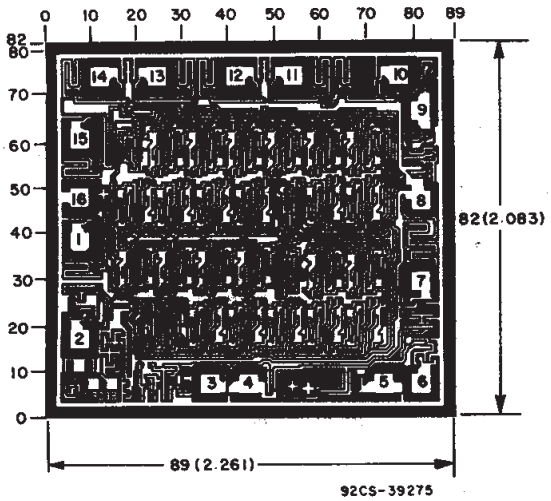

Dimensions and pad layout for CD4521BH.

Dimensions in parentheses are in millimeters and are derived from the basic inch dimensions as indicated. Grid graduations are in mils (10^{-3} inch).

PACKAGING INFORMATION

Orderable part number	Status (1)	Material type (2)	Package | Pins	Package qty | Carrier	RoHS (3)	Lead finish/ Ball material (4)	MSL rating/ Peak reflow (5)	Op temp (°C)	Part marking (6)
CD4521BE	Active	Production	PDIP (N) | 16	25 | TUBE	Yes	NIPDAU	N/A for Pkg Type	-55 to 125	CD4521BE
CD4521BE.A	Active	Production	PDIP (N) | 16	25 | TUBE	Yes	NIPDAU	N/A for Pkg Type	-55 to 125	CD4521BE
CD4521BEE4	Active	Production	PDIP (N) | 16	25 | TUBE	Yes	NIPDAU	N/A for Pkg Type	-55 to 125	CD4521BE
CD4521BM	Obsolete	Production	SOIC (D) | 16	-	-	Call TI	Call TI	-55 to 125	CD4521BM
CD4521BM96	Active	Production	SOIC (D) | 16	2500 | LARGE T&R	Yes	NIPDAU	Level-1-260C-UNLIM	-55 to 125	CD4521BM
CD4521BM96.A	Active	Production	SOIC (D) | 16	2500 | LARGE T&R	Yes	NIPDAU	Level-1-260C-UNLIM	-55 to 125	CD4521BM
CD4521BMT	Obsolete	Production	SOIC (D) | 16	-	-	Call TI	Call TI	-55 to 125	CD4521BM
CD4521BNSR	Active	Production	SOP (NS) | 16	2000 | LARGE T&R	Yes	NIPDAU	Level-1-260C-UNLIM	-55 to 125	CD4521B
CD4521BNSR.A	Active	Production	SOP (NS) | 16	2000 | LARGE T&R	Yes	NIPDAU	Level-1-260C-UNLIM	-55 to 125	CD4521B
CD4521BPW	Active	Production	TSSOP (PW) | 16	90 | TUBE	Yes	NIPDAU	Level-1-260C-UNLIM	-55 to 125	CM521B
CD4521BPW.A	Active	Production	TSSOP (PW) | 16	90 | TUBE	Yes	NIPDAU	Level-1-260C-UNLIM	-55 to 125	CM521B

(1) **Status:** For more details on status, see our product life cycle.

(2) **Material type:** When designated, preproduction parts are prototypes/experimental devices, and are not yet approved or released for full production. Testing and final process, including without limitation quality assurance, reliability performance testing, and/or process qualification, may not yet be complete, and this item is subject to further changes or possible discontinuation. If available for ordering, purchases will be subject to an additional waiver at checkout, and are intended for early internal evaluation purposes only. These items are sold without warranties of any kind.

(3) **RoHS values:** Yes, No, RoHS Exempt. See the TI RoHS Statement for additional information and value definition.

(4) **Lead finish/Ball material:** Parts may have multiple material finish options. Finish options are separated by a vertical ruled line. Lead finish/Ball material values may wrap to two lines if the finish value exceeds the maximum column width.

(5) **MSL rating/Peak reflow:** The moisture sensitivity level ratings and peak solder (reflow) temperatures. In the event that a part has multiple moisture sensitivity ratings, only the lowest level per JEDEC standards is shown. Refer to the shipping label for the actual reflow temperature that will be used to mount the part to the printed circuit board.

(6) **Part marking:** There may be an additional marking, which relates to the logo, the lot trace code information, or the environmental category of the part.

Multiple part markings will be inside parentheses. Only one part marking contained in parentheses and separated by a "~" will appear on a part. If a line is indented then it is a continuation of the previous line and the two combined represent the entire part marking for that device.

Important Information and Disclaimer: The information provided on this page represents TI's knowledge and belief as of the date that it is provided. TI bases its knowledge and belief on information provided by third parties, and makes no representation or warranty as to the accuracy of such information. Efforts are underway to better integrate information from third parties. TI has taken and continues to take reasonable steps to provide representative and accurate information but may not have conducted destructive testing or chemical analysis on incoming materials and chemicals. TI and TI suppliers consider certain information to be proprietary, and thus CAS numbers and other limited information may not be available for release.

In no event shall TI's liability arising out of such information exceed the total purchase price of the TI part(s) at issue in this document sold by TI to Customer on an annual basis.

TAPE AND REEL INFORMATION

REEL DIMENSIONS

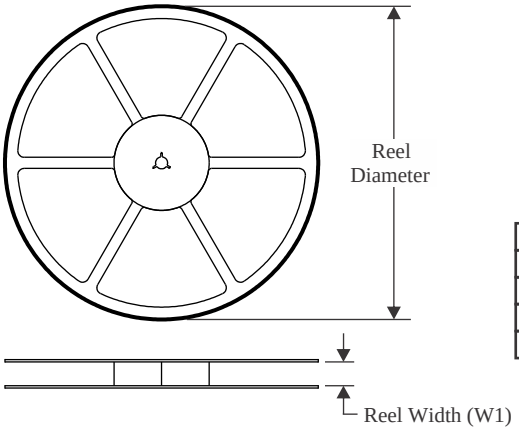

TAPE DIMENSIONS

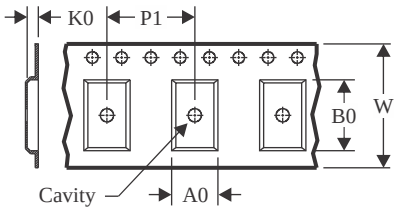

A0	Dimension designed to accommodate the component width
B0	Dimension designed to accommodate the component length
K0	Dimension designed to accommodate the component thickness
W	Overall width of the carrier tape
P1	Pitch between successive cavity centers

QUADRANT ASSIGNMENTS FOR PIN 1 ORIENTATION IN TAPE

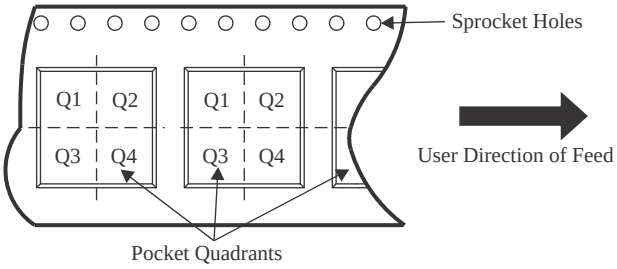

*All dimensions are nominal

Device	Package Type	Package Drawing	Pins	SPQ	Reel Diameter (mm)	Reel Width W1 (mm)	A0 (mm)	B0 (mm)	K0 (mm)	P1 (mm)	W (mm)	Pin1 Quadrant
CD4521BM96	SOIC	D	16	2500	330.0	16.4	6.5	10.3	2.1	8.0	16.0	Q1
CD4521BNSR	SOP	NS	16	2000	330.0	16.4	8.2	10.5	2.5	12.0	16.0	Q1

TAPE AND REEL BOX DIMENSIONS

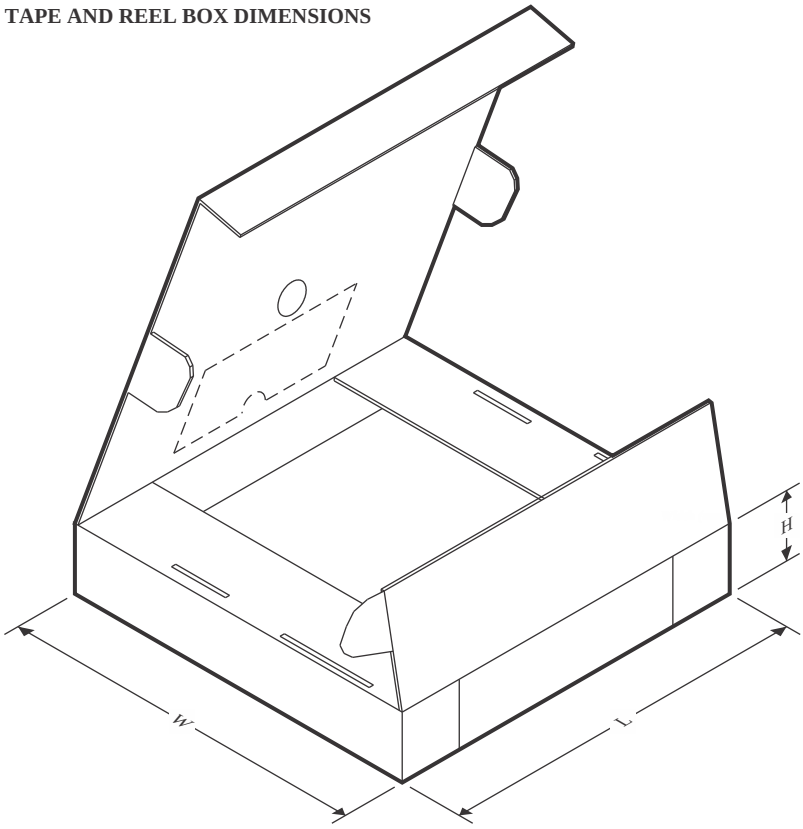

*All dimensions are nominal

Device	Package Type	Package Drawing	Pins	SPQ	Length (mm)	Width (mm)	Height (mm)
CD4521BM96	SOIC	D	16	2500	353.0	353.0	32.0
CD4521BNSR	SOP	NS	16	2000	356.0	356.0	35.0

TUBE

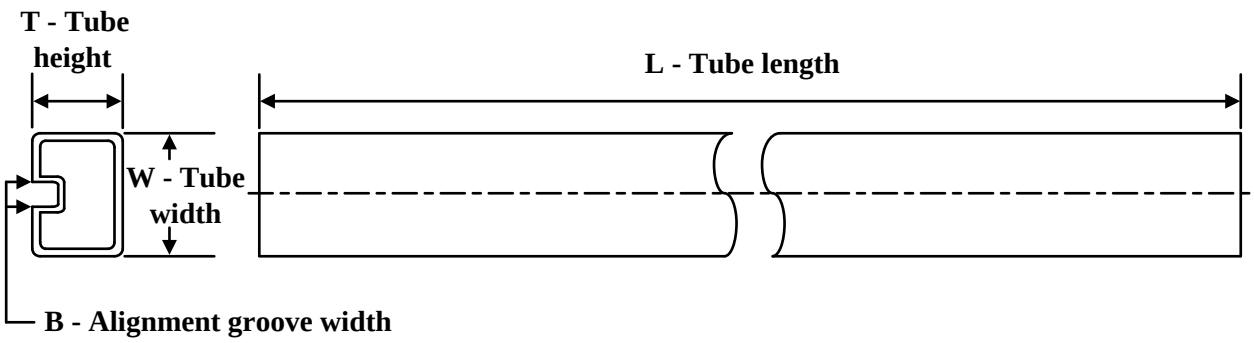

*All dimensions are nominal

Device	Package Name	Package Type	Pins	SPQ	L (mm)	W (mm)	T (µm)	B (mm)
CD4521BE	N	PDIP	16	25	506	13.97	11230	4.32
CD4521BE	N	PDIP	16	25	506	13.97	11230	4.32
CD4521BE.A	N	PDIP	16	25	506	13.97	11230	4.32
CD4521BE.A	N	PDIP	16	25	506	13.97	11230	4.32
CD4521BEE4	N	PDIP	16	25	506	13.97	11230	4.32
CD4521BEE4	N	PDIP	16	25	506	13.97	11230	4.32
CD4521BPW	PW	TSSOP	16	90	530	10.2	3600	3.5
CD4521BPW.A	PW	TSSOP	16	90	530	10.2	3600	3.5

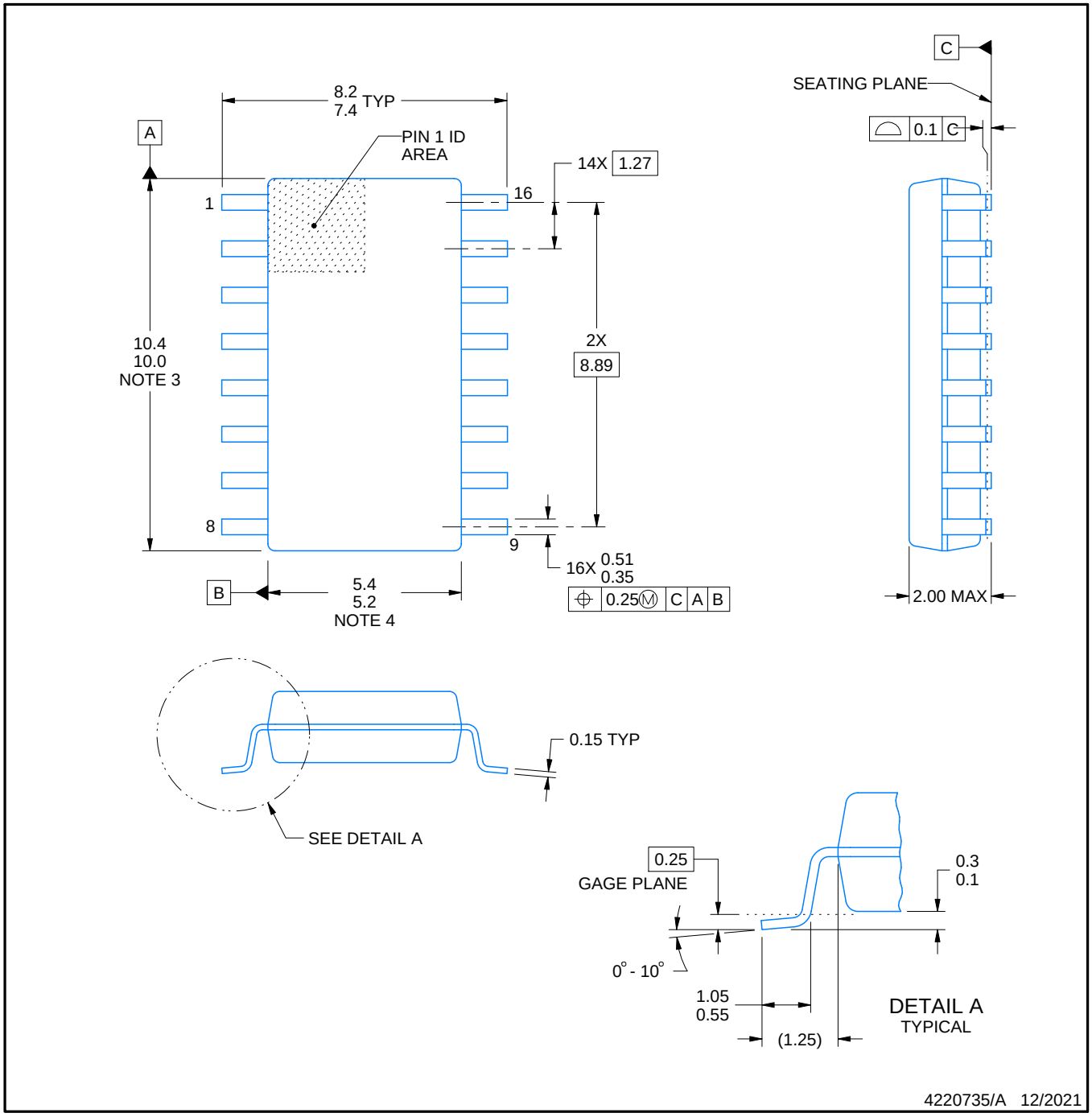

NOTES:

1. All linear dimensions are in millimeters. Dimensions in parenthesis are for reference only. Dimensioning and tolerancing per ASME Y14.5M.
2. This drawing is subject to change without notice.
3. This dimension does not include mold flash, protrusions, or gate burrs. Mold flash, protrusions, or gate burrs shall not exceed 0.15 mm, per side.
4. This dimension does not include interlead flash. Interlead flash shall not exceed 0.25 mm, per side.

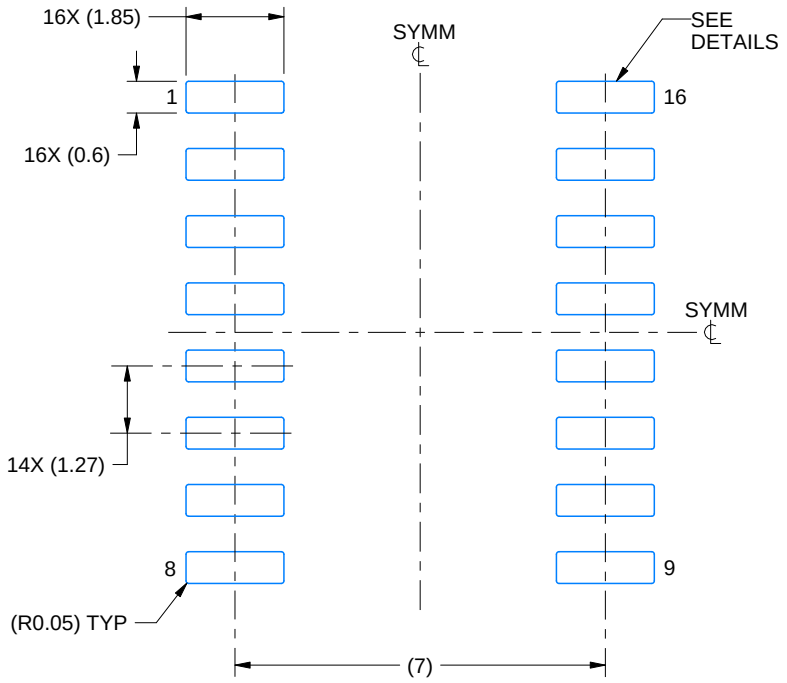

LAND PATTERN EXAMPLE
SCALE:7X

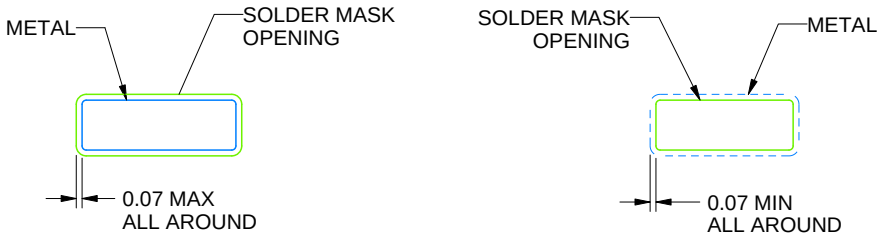

NON SOLDER MASK DEFINED

SOLDER MASK DEFINED

SOLDER MASK DETAILS

4220735/A 12/2021

NOTES: (continued)

5. Publication IPC-7351 may have alternate designs.
6. Solder mask tolerances between and around signal pads can vary based on board fabrication site.

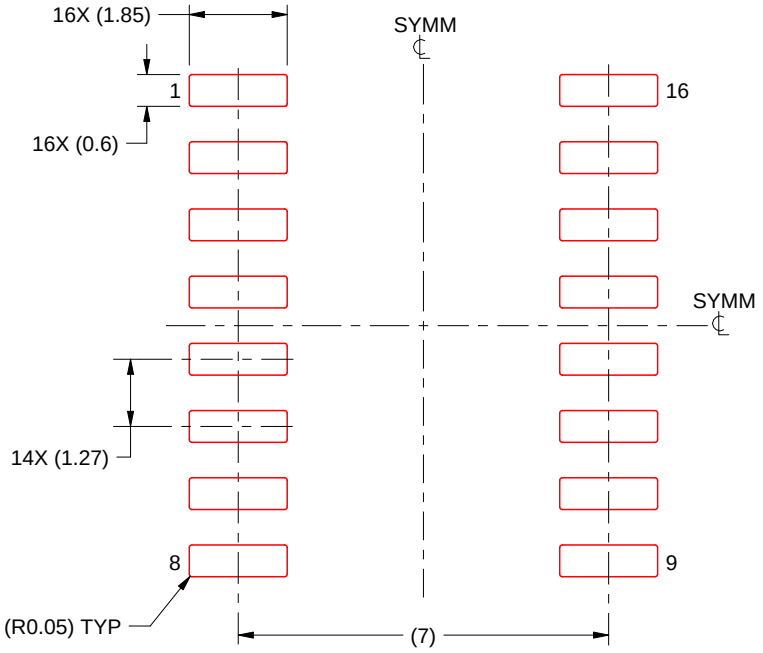

SOLDER PASTE EXAMPLE
BASED ON 0.125 mm THICK STENCIL
SCALE:7X

4220735/A 12/2021

NOTES: (continued)

7. Laser cutting apertures with trapezoidal walls and rounded corners may offer better paste release. IPC-7525 may have alternate design recommendations.
8. Board assembly site may have different recommendations for stencil design.

D (R–PDSO–G16) PLASTIC SMALL OUTLINE

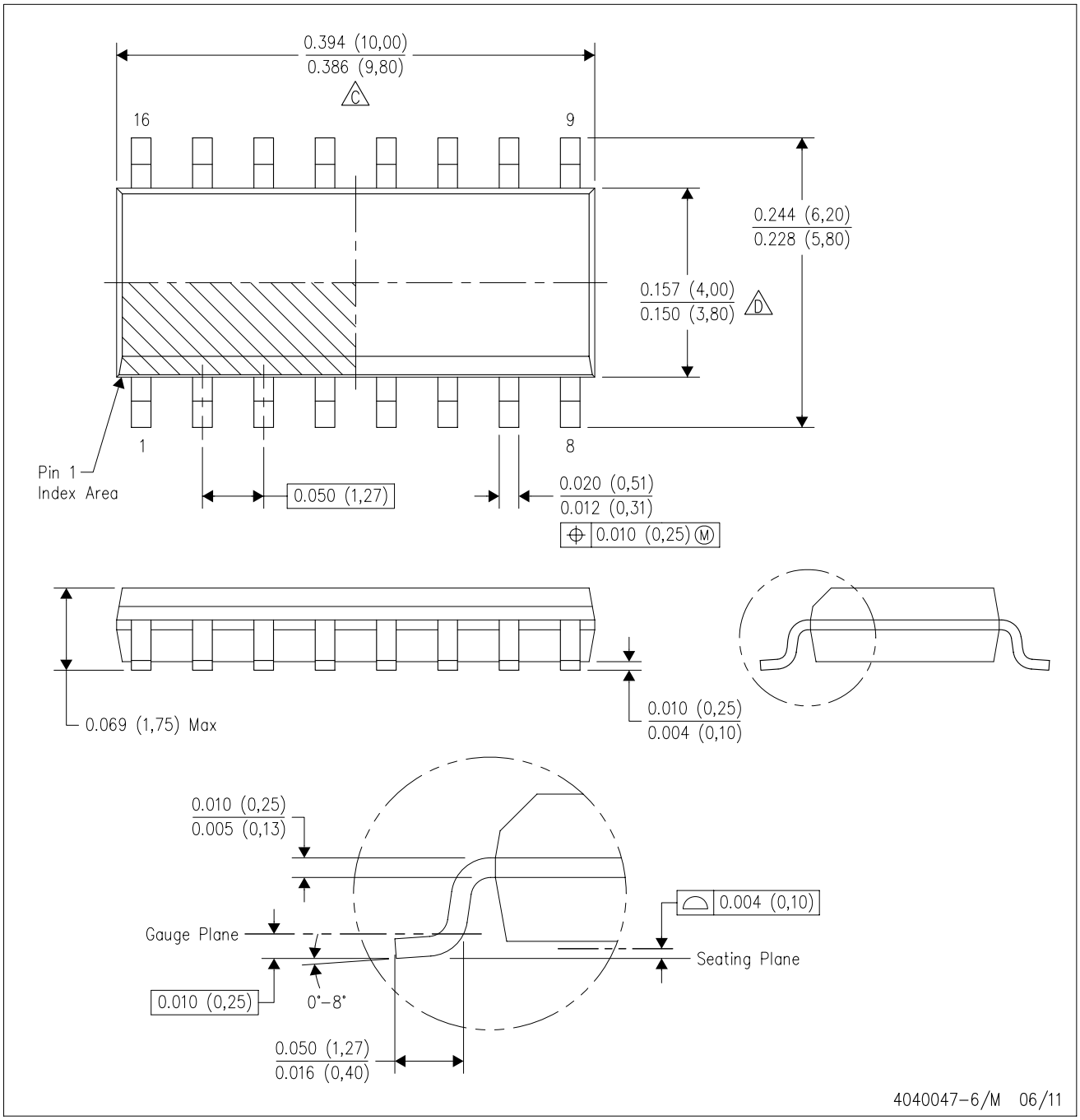

NOTES:
A. All linear dimensions are in inches (millimeters).
B. This drawing is subject to change without notice.
C. Body length does not include mold flash, protrusions, or gate burrs. Mold flash, protrusions, or gate burrs shall not exceed 0.006 (0,15) each side.
D. Body width does not include interlead flash. Interlead flash shall not exceed 0.017 (0,43) each side.
E. Reference JEDEC MS–012 variation AC.

PW0016A

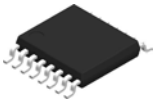

PACKAGE OUTLINE

TSSOP - 1.2 mm max height

SMALL OUTLINE PACKAGE

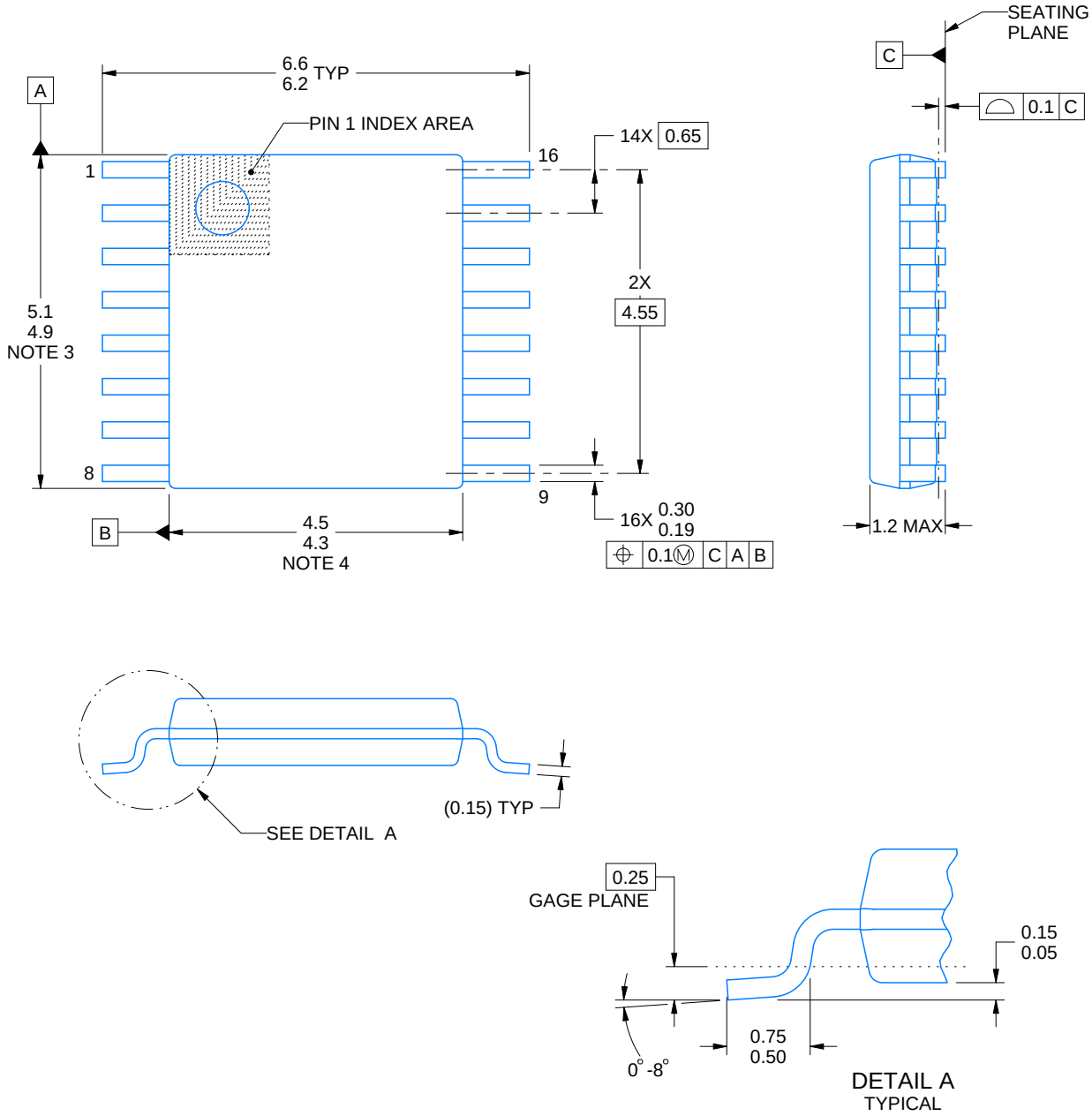

NOTES:

1. All linear dimensions are in millimeters. Any dimensions in parenthesis are for reference only. Dimensioning and tolerancing per ASME Y14.5M.
2. This drawing is subject to change without notice.
3. This dimension does not include mold flash, protrusions, or gate burrs. Mold flash, protrusions, or gate burrs shall not exceed 0.15 mm per side.
4. This dimension does not include interlead flash. Interlead flash shall not exceed 0.25 mm per side.
5. Reference JEDEC registration MO-153.

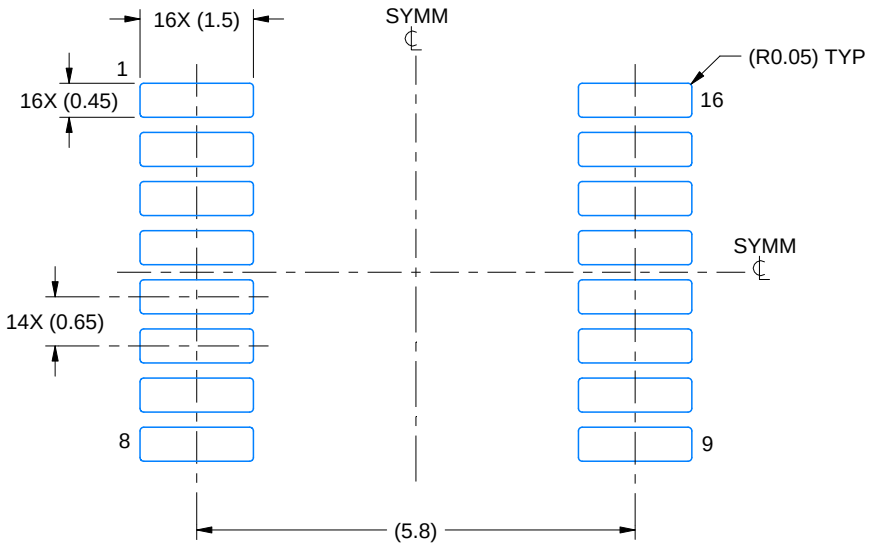

LAND PATTERN EXAMPLE
EXPOSED METAL SHOWN
SCALE: 10X

NON-SOLDER MASK DEFINED (PREFERRED)

SOLDER MASK DEFINED

SOLDER MASK DETAILS

4220204/A 02/2017

NOTES: (continued)

6. Publication IPC-7351 may have alternate designs.
7. Solder mask tolerances between and around signal pads can vary based on board fabrication site.

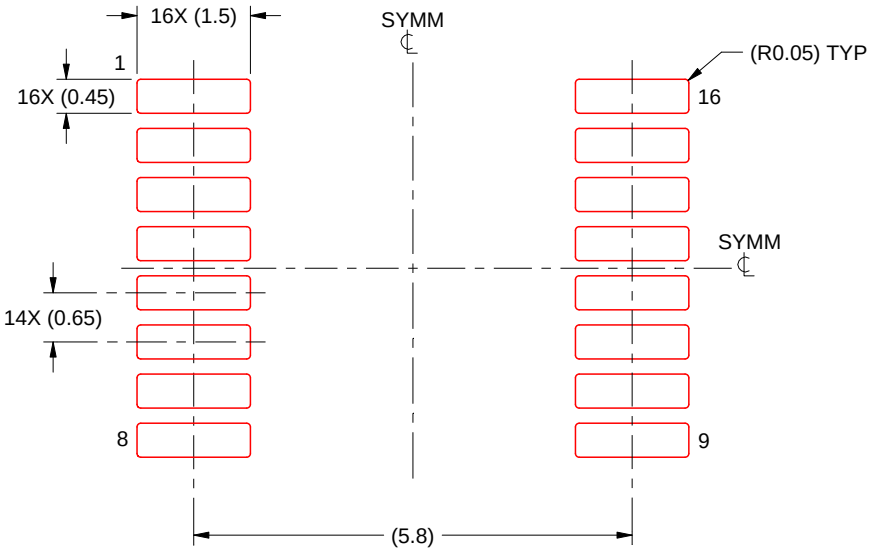

SOLDER PASTE EXAMPLE
BASED ON 0.125 mm THICK STENCIL
SCALE: 10X

4220204/A 02/2017

NOTES: (continued)

8. Laser cutting apertures with trapezoidal walls and rounded corners may offer better paste release. IPC-7525 may have alternate design recommendations.
9. Board assembly site may have different recommendations for stencil design.

MECHANICAL DATA

NS (R-PDSO-G)** **PLASTIC SMALL-OUTLINE PACKAGE**

14-PINS SHOWN

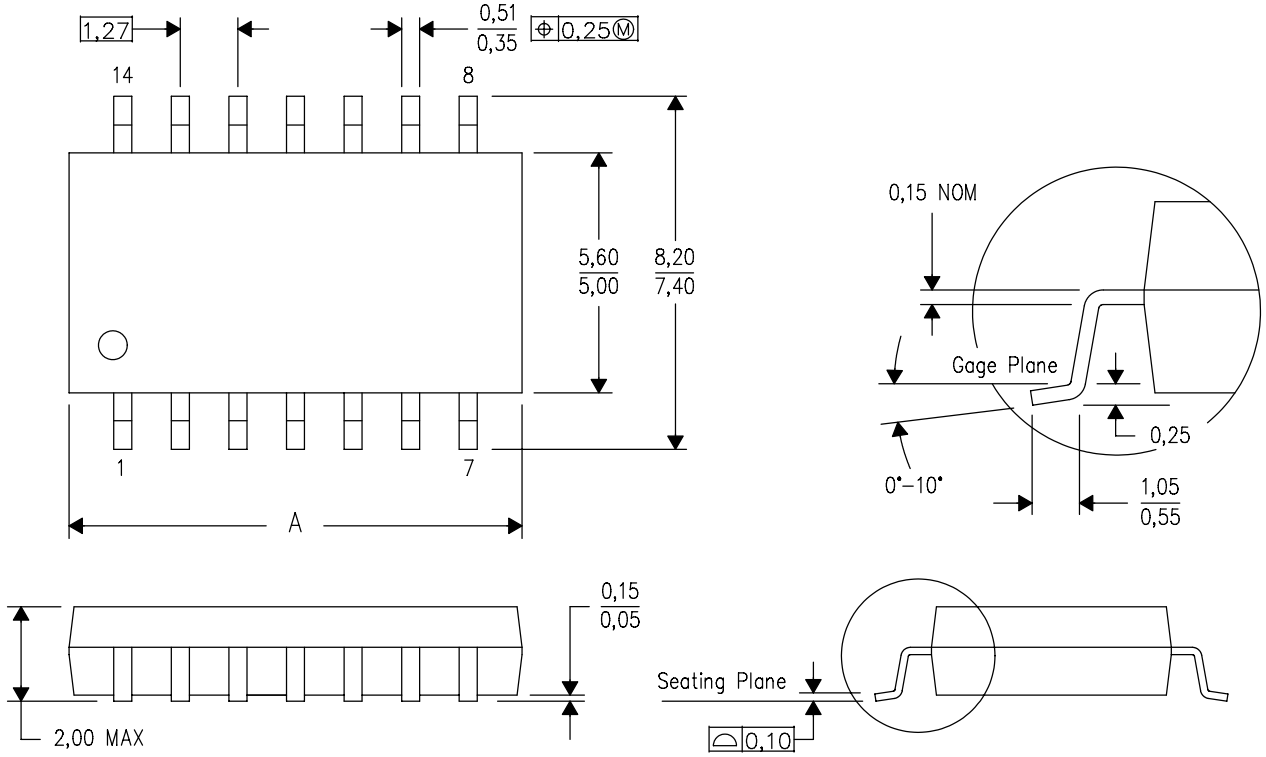

DIM \ PINS **	14	16	20	24
A MAX	10,50	10,50	12,90	15,30
A MIN	9,90	9,90	12,30	14,70

4040062/C 03/03

NOTES:
A. All linear dimensions are in millimeters.
B. This drawing is subject to change without notice.
C. Body dimensions do not include mold flash or protrusion, not to exceed 0,15.

N (R–PDIP–T**) PLASTIC DUAL–IN–LINE PACKAGE

16 PINS SHOWN

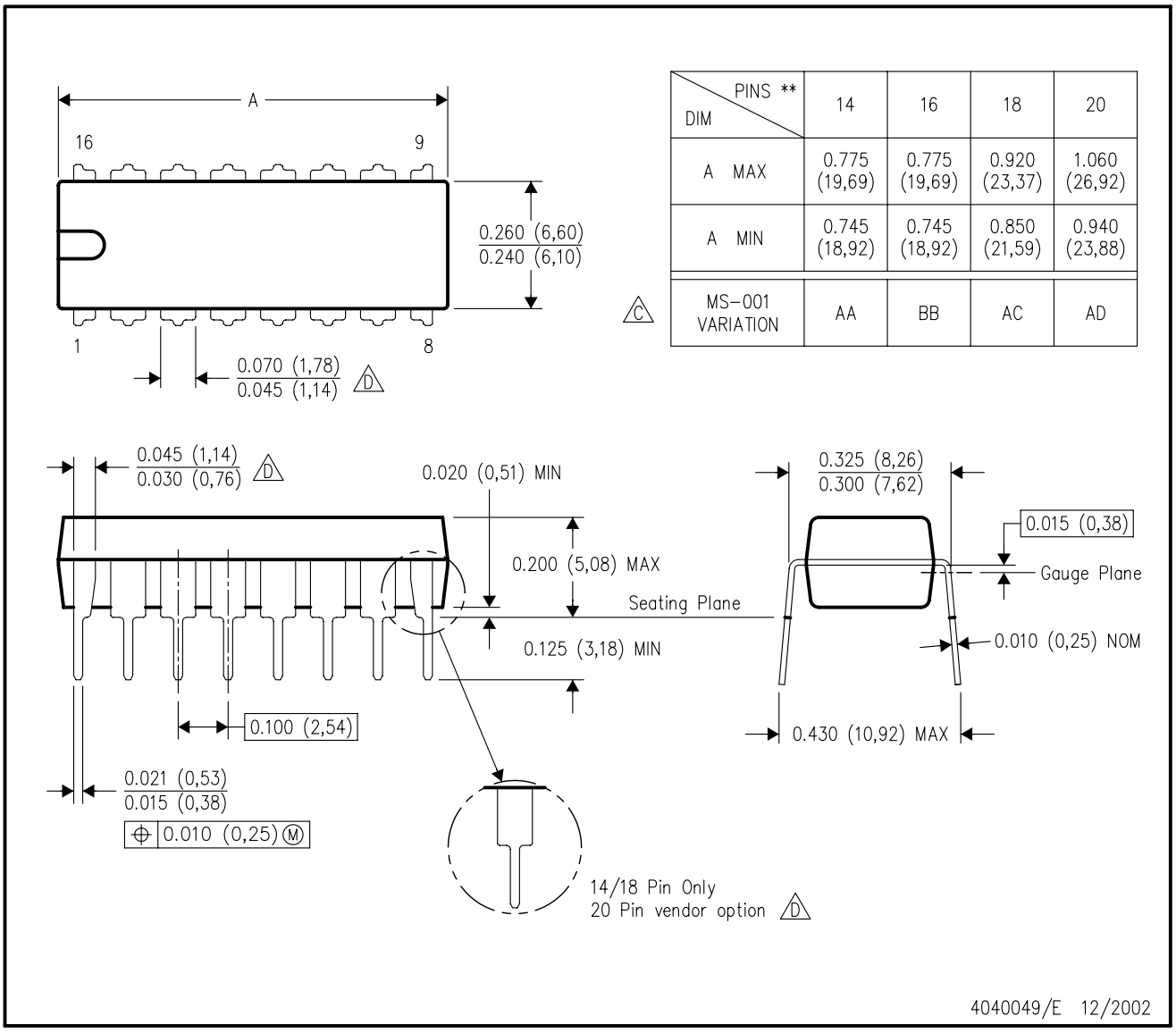

DIM \ PINS **	14	16	18	20
A MAX	0.775 (19,69)	0.775 (19,69)	0.920 (23,37)	1.060 (26,92)
A MIN	0.745 (18,92)	0.745 (18,92)	0.850 (21,59)	0.940 (23,88)
MS–001 VARIATION (C)	AA	BB	AC	AD

NOTES:
A. All linear dimensions are in inches (millimeters).
B. This drawing is subject to change without notice.
C. Falls within JEDEC MS–001, except 18 and 20 pin minimum body length (Dim A).
D. The 20 pin end lead shoulder width is a vendor option, either half or full width.

IMPORTANT NOTICE AND DISCLAIMER

TI PROVIDES TECHNICAL AND RELIABILITY DATA (INCLUDING DATA SHEETS), DESIGN RESOURCES (INCLUDING REFERENCE DESIGNS), APPLICATION OR OTHER DESIGN ADVICE, WEB TOOLS, SAFETY INFORMATION, AND OTHER RESOURCES “AS IS” AND WITH ALL FAULTS, AND DISCLAIMS ALL WARRANTIES, EXPRESS AND IMPLIED, INCLUDING WITHOUT LIMITATION ANY IMPLIED WARRANTIES OF MERCHANTABILITY, FITNESS FOR A PARTICULAR PURPOSE OR NON-INFRINGEMENT OF THIRD PARTY INTELLECTUAL PROPERTY RIGHTS.

These resources are intended for skilled developers designing with TI products. You are solely responsible for (1) selecting the appropriate TI products for your application, (2) designing, validating and testing your application, and (3) ensuring your application meets applicable standards, and any other safety, security, regulatory or other requirements.

These resources are subject to change without notice. TI grants you permission to use these resources only for development of an application that uses the TI products described in the resource. Other reproduction and display of these resources is prohibited. No license is granted to any other TI intellectual property right or to any third party intellectual property right. TI disclaims responsibility for, and you will fully indemnify TI and its representatives against, any claims, damages, costs, losses, and liabilities arising out of your use of these resources.

TI’s products are provided subject to TI’s Terms of Sale or other applicable terms available either on ti.com or provided in conjunction with such TI products. TI’s provision of these resources does not expand or otherwise alter TI’s applicable warranties or warranty disclaimers for TI products.

TI objects to and rejects any additional or different terms you may have proposed.

Mailing Address: Texas Instruments, Post Office Box 655303, Dallas, Texas 75265
Copyright © 2025, Texas Instruments Incorporated