CDx4HC132 Quadruple 2-Input NAND Gates with Schmitt-Trigger Inputs

1 Features

- Buffered inputs
- Wide operating temperature range: –55°C to +125°C
- Supports fanout up to 10 LSTTL loads
- Significant power reduction compared to LSTTL logic ICs

2 Applications

- Alarm / tamper detect circuit
- S-R latch

3 Description

This device contains four independent 2-input NAND gates. Each gate performs the Boolean function $Y = \overline{A \bullet B}$ in positive logic.

Device Information

PART NUMBER	PACKAGE(1)	BODY SIZE (NOM)
CD74HC132M	SOIC (14)	8.65 mm × 3.90 mm
CD74HC132E	PDIP (14)	19.30 mm × 6.40 mm
CD54HC132J	CDIP (14)	19.94 mm × 7.62 mm

(1) For all available packages, see the orderable addendum at the end of the data sheet.

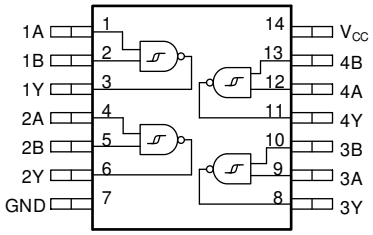

Device functional pinout

An IMPORTANT NOTICE at the end of this data sheet addresses availability, warranty, changes, use in safety-critical applications, intellectual property matters and other important disclaimers. PRODUCTION DATA.

Table of Contents

1 Features....1
2 Applications....1
3 Description....1
4 Revision History....2
5 Pin Configuration and Functions....3
Pin Functions....3
6 Specifications....4
6.1 Absolute Maximum Ratings....4
6.2 ESD Ratings....4
6.3 Recommended Operating Conditions....4
6.4 Thermal Information....4
6.5 Electrical Characteristics....5
6.6 Switching Characteristics....6
6.7 Operating Characteristics....6
6.8 Typical Characteristics....6
7 Parameter Measurement Information....7
8 Detailed Description....8
8.1 Overview....8
8.2 Functional Block Diagram....8
8.3 Balanced CMOS Push-Pull Outputs....8
8.4 CMOS Schmitt-Trigger Inputs....8
8.5 Clamp Diode Structure....8
8.6 Device Functional Modes....9
9 Application and Implementation....10
9.1 Application Information....10
9.2 Typical Application....10
10 Power Supply Recommendations....13
11 Layout....13
11.1 Layout Guidelines....13
11.2 Layout Example....13
12 Device and Documentation Support....14
12.1 Documentation Support....14
12.2 Receiving Notification of Documentation Updates....14
12.3 Support Resources....14
12.4 Trademarks....14
12.5 Electrostatic Discharge Caution....14
12.6 Glossary....14
13 Mechanical, Packaging, and Orderable Information....15

4 Revision History

NOTE: Page numbers for previous revisions may differ from page numbers in the current version.

Changes from Revision E (March 2004) to Revision F (January 2021)	Page
• Updated to new data sheet format	1
• HCT devices moved to SCHS399 data sheet	1
• $R_{\theta JA}$ increased for the D package from 86 to 133.6 °C/W and decreased for the N package from 80 to 61.3 °C/W	4

Copyright © 2021 Texas Instruments Incorporated

5 Pin Configuration and Functions

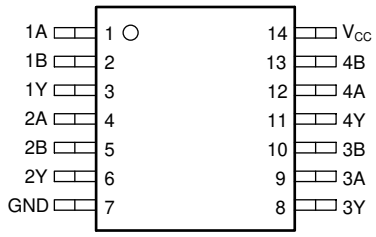

Figure 5-1. D, N, or J Package 14-Pin SOIC, PDIP, or CDIP Top View

Pin Functions

PIN		I/O	DESCRIPTION
NAME	NO.		
1A	1	Input	Channel 1, Input A
1B	2	Input	Channel 1, Input B
1Y	3	Output	Channel 1, Output Y
2A	4	Input	Channel 2, Input A
2B	5	Input	Channel 2, Input B
2Y	6	Output	Channel 2, Output Y
GND	7	—	Ground
3Y	8	Output	Channel 3, Output Y
3A	9	Input	Channel 3, Input A
3B	10	Input	Channel 3, Input B
4Y	11	Output	Channel 4, Output Y
4A	12	Input	Channel 4, Input A
4B	13	Input	Channel 4, Input B
V_{CC}	14	—	Positive Supply

Copyright © 2021 Texas Instruments Incorporated

6 Specifications

6.1 Absolute Maximum Ratings

over operating free-air temperature range (unless otherwise noted)[1]

			MIN	MAX	UNIT
V_{CC}	Supply voltage		–0.5	7	V
I_{IK}	Input clamp current[2]	V_I < –0.5 V or V_I > V_{CC} + 0.5 V		±20	mA
I_{OK}	Output clamp current[2]	V_O < –0.5 V or V_O > V_{CC} + 0.5 V		±20	mA
I_O	Continuous output current	V_O > –0.5 V or V_O < V_{CC} + 0.5 V		±25	mA
	Continuous current through V_{CC} or GND			±50	mA
T_J	Junction temperature[3]			150	°C
	Lead temperature (soldering 10s)	SOIC - lead tips only		300	°C
T_{stg}	Storage temperature		–65	150	°C

(1) Stresses beyond those listed under *Absolute Maximum Rating* may cause permanent damage to the device. These are stress ratings only, which do not imply functional operation of the device at these or any other conditions beyond those indicated under *Recommended Operating Condition*. Exposure to absolute-maximum-rated conditions for extended periods may affect device reliability.
(2) The input and output voltage ratings may be exceeded if the input and output current ratings are observed.
(3) Guaranteed by design.

6.2 ESD Ratings

			VALUE	UNIT
$V_{(ESD)}$	Electrostatic discharge	Human-body model (HBM), per ANSI/ESDA/JEDEC JS-001[1]	±2000	V
		Charged-device model (CDM), per JEDEC specification JESD22-C101[2]	±500	

(1) JEDEC document JEP155 states that 500-V HBM allows safe manufacturing with a standard ESD control process.
(2) JEDEC document JEP157 states that 250-V CDM allows safe manufacturing with a standard ESD control process.

6.3 Recommended Operating Conditions

over operating free-air temperature range (unless otherwise noted)

			MIN	NOM	MAX	UNIT
V_{CC}	Supply voltage		2		6	V
V_I	Input voltage		0		V_{CC}	V
V_O	Output voltage		0		V_{CC}	V
T_A	Operating free-air temperature		–55		125	°C

6.4 Thermal Information

THERMAL METRIC[1]		CD74HC132		UNIT
		N (PDIP)	D (SOIC)	
		14 PINS	14 PINS	
$R_{\theta JA}$	Junction-to-ambient thermal resistance	61.3	133.6	°C/W
$R_{\theta JC(top)}$	Junction-to-case (top) thermal resistance	49.1	89.0	°C/W
$R_{\theta JB}$	Junction-to-board thermal resistance	41.1	89.5	°C/W
Ψ_{JT}	Junction-to-top characterization parameter	28.7	45.5	°C/W
Ψ_{JB}	Junction-to-board characterization parameter	40.8	89.1	°C/W

Copyright © 2021 Texas Instruments Incorporated

THERMAL METRIC[1]		CD74HC132		UNIT
		N (PDIP)	D (SOIC)	
		14 PINS	14 PINS	
$R_{\theta JC(bot)}$	Junction-to-case (bottom) thermal resistance	N/A	N/A	°C/W

(1) For more information about traditional and new thermal metrics, see the Semiconductor and IC Package Thermal Metrics application report.

6.5 Electrical Characteristics

over operating free-air temperature range; typical values measured at T_A = 25°C (unless otherwise noted).

PARAMETER		TEST CONDITIONS		V_{CC}	Operating free-air temperature (T_A)									UNIT
					25°C			–40°C to 85°C			–55°C to 125°C			
					MIN	TYP	MAX	MIN	TYP	MAX	MIN	TYP	MAX	
V_{T+}	Positive switching threshold			2 V	0.7		1.5	0.7		1.5	0.7		1.5	V
				4.5 V	1.7		3.15	1.7		3.15	1.7		3.15	
				6 V	2.1		4.2	2.1		4.2	2.1		4.2	
V_{T-}	Negative switching threshold			2 V	0.3		1.0	0.3		1.0	0.3		1.0	V
				4.5 V	0.9		2.2	0.9		2.2	0.9		2.2	
				6 V	1.2		3.0	1.2		3.0	1.2		3.0	
ΔV_T	Hysteresis (V_{T+} - V_{T-})			2 V	0.2		1.0	0.2		1.0	0.2		1.0	V
				4.5 V	0.4		1.4	0.4		1.4	0.4		1.4	
				6 V	0.6		1.6	0.6		1.6	0.6		1.6	
V_{OH}	High-level output voltage	V_{T+} or V_{T-}	I_{OH} = –20 µA	2 V	1.9			1.9			1.9			V
				4.5 V	4.4			4.4			4.4			
				6 V	5.9			5.9			5.9			
			I_{OH} = –4 mA	4.5 V	3.98			3.84			3.7			
			I_{OH} = –5.2 mA	6 V	5.48			5.34			5.2			
V_{OL}	Low-level output voltage	V_{T+} or V_{T-}	I_{OL} = 20 µA	2 V			0.1			0.1			0.1	V
				4.5 V			0.1			0.1			0.1	
				6 V			0.1			0.1			0.1	
			I_{OL} = 4 mA	4.5 V			0.26			0.33			0.4	
			I_{OL} = 5.2 mA	6 V			0.26			0.33			0.4	
I_I	Input leakage current	V_I = V_{CC} or 0		6 V			±0.1			±1			±1	µA
I_{CC}	Supply current	V_I = V_{CC} or 0	I_O = 0	6 V			2			20			40	µA
C_i	Input capacitance			5 V			10			10			10	pF

6.6 Switching Characteristics

over operating free-air temperature range; typical values measured at TA = 25°C (unless otherwise noted).

PARAMETER		FROM	TO	TEST CONDITIONS	V_{CC}	Operating free-air temperature (T_A)									UNIT
						25°C			–40°C to 85°C			–55°C to 125°C			
						MIN	TYP	MAX	MIN	TYP	MAX	MIN	TYP	MAX	
t_{pd}	Propagation delay	A or B	Y	C_L = 50 pF	2 V			125			156			188	ns
					4.5 V			25			31			38	
					6 V			21			27			32	
		A or B	Y	C_L = 15 pF	5 V		10								
t_t	Transition-time		Y	C_L = 50 pF	2 V			75			95			110	ns
					4.5 V			15			19			22	
					6 V			13			16			19	

6.7 Operating Characteristics

over operating free-air temperature range; typical values measured at T_A = 25°C (unless otherwise noted).

PARAMETER		TEST CONDITIONS	V_{CC}	MIN	TYP	MAX	UNIT
C_{pd}	Power dissipation capacitance per gate	No load	2 V to 6 V		30		pF

6.8 Typical Characteristics

T_A = 25°C

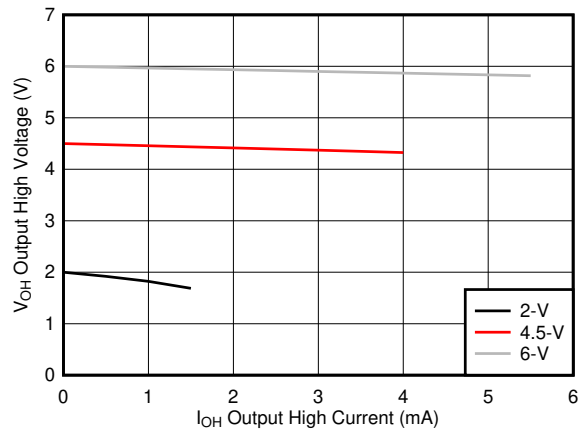

Figure 6-1. Typical output voltage in the high state (V_{OH})

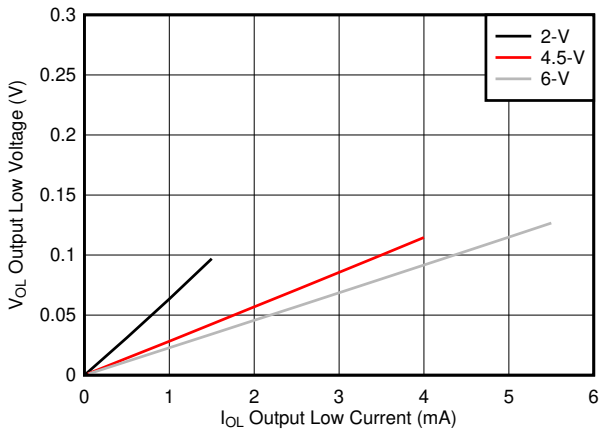

Figure 6-2. Typical output voltage in the low state (V_{OL})

Copyright © 2021 Texas Instruments Incorporated

7 Parameter Measurement Information

Phase relationships between waveforms were chosen arbitrarily. All input pulses are supplied by generators having the following characteristics: PRR ≤ 1 MHz, Z_O = 50 Ω, t_t < 6 ns.

For clock inputs, f_{max} is measured when the input duty cycle is 50%.

The outputs are measured one at a time with one input transition per measurement.

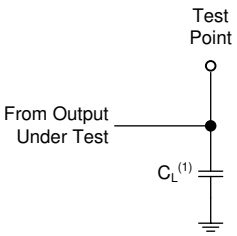

(1) C_L includes probe and test-fixture capacitance.

Figure 7-1. Load Circuit for Push-Pull Outputs

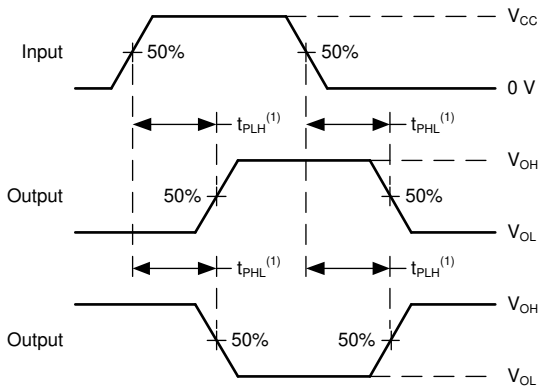

(1) The greater between t_{PLH} and t_{PHL} is the same as t_{pd}.

Figure 7-2. Voltage Waveforms, Propagation Delays

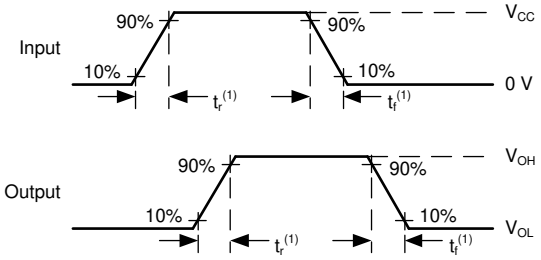

(1) The greater between t_r and t_f is the same as t_t.

Figure 7-3. Voltage Waveforms, Input and Output Transition Times

8 Detailed Description

8.1 Overview

This device contains four independent 2-input NAND gates with Schmitt-trigger inputs. Each gate performs the Boolean function $Y = \overline{A \bullet B}$ in positive logic.

8.2 Functional Block Diagram

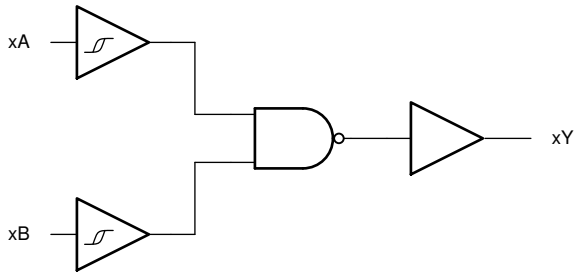

Figure 8-1. Logic Diagram (Positive Logic) for the CD74HC132

8.3 Balanced CMOS Push-Pull Outputs

This device includes balanced CMOS push-pull outputs. The term "balanced" indicates that the device can sink and source similar currents. The drive capability of this device may create fast edges into light loads so routing and load conditions should be considered to prevent ringing. Additionally, the outputs of this device are capable of driving larger currents than the device can sustain without being damaged. It is important for the output power of the device to be limited to avoid damage due to overcurrent. The electrical and thermal limits defined in the *Absolute Maximum Ratings* must be followed at all times.

Unused push-pull CMOS outputs should be left disconnected.

8.4 CMOS Schmitt-Trigger Inputs

This device includes inputs with the Schmitt-trigger architecture. These inputs are high impedance and are typically modeled as a resistor in parallel with the input capacitance given in the *Electrical Characteristics* table from the input to ground. The worst case resistance is calculated with the maximum input voltage, given in the *Absolute Maximum Ratings* table, and the maximum input leakage current, given in the *Electrical Characteristics* table, using Ohm's law (R = V ÷ I).

The Schmitt-trigger input architecture provides hysteresis as defined by ΔV_T in the *Electrical Characteristics* table, which makes this device extremely tolerant to slow or noisy inputs. While the inputs can be driven much slower than standard CMOS inputs, it is still recommended to properly terminate unused inputs. Driving the inputs with slow transitioning signals will increase dynamic current consumption of the device. For additional information regarding Schmitt-trigger inputs, please see Understanding Schmitt Triggers.

8.5 Clamp Diode Structure

The inputs and outputs to this device have both positive and negative clamping diodes as depicted in Electrical Placement of Clamping Diodes for Each Input and Output.

CAUTION

Voltages beyond the values specified in the *Absolute Maximum Ratings* table can cause damage to the device. The input and output voltage ratings may be exceeded if the input and output clamp-current ratings are observed.

Copyright © 2021 Texas Instruments Incorporated

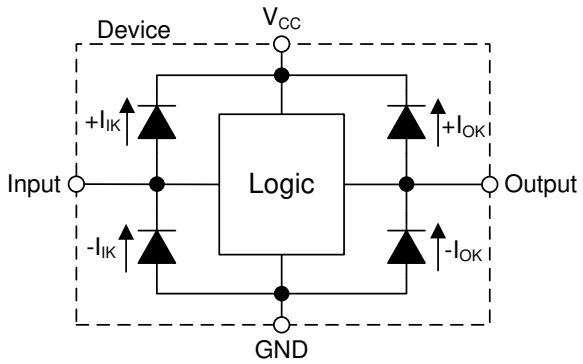

Figure 8-2. Electrical Placement of Clamping Diodes for Each Input and Output

8.6 Device Functional Modes

Table 8-1. Function Table

INPUTS		OUTPUT
A	B	Y
H	H	L
L	X	H
X	L	H

9 Application and Implementation

Note

Information in the following applications sections is not part of the TI component specification, and TI does not warrant its accuracy or completeness. TI's customers are responsible for determining suitability of components for their purposes, as well as validating and testing their design implementation to confirm system functionality.

9.1 Application Information

In this application, the CD74HC132 is used to create an active-low SR latch. The two additional gates can be used for a second active-low SR latch, individually used for their logic function, or the inputs can be grounded and both channels left unused. This device is used to drive the tamper indicator LED and provide one bit of data to the system controller. When the tamper switch outputs LOW, the output Q becomes HIGH. This output remains HIGH until the system controller addresses the event and sends a LOW signal to the R input which returns the Q output back to LOW.

9.2 Typical Application

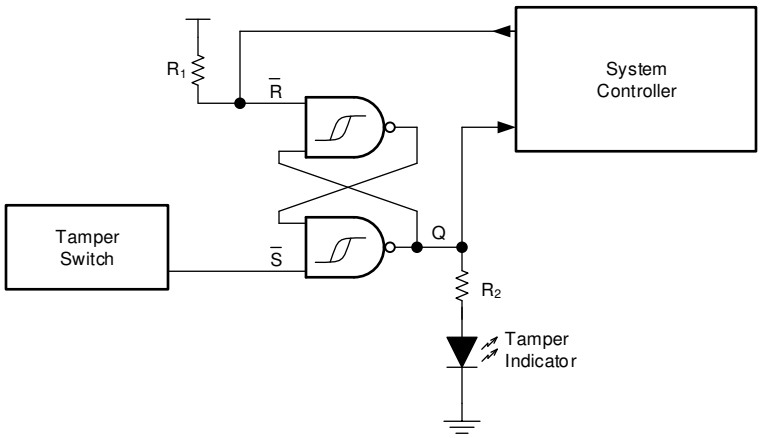

Figure 9-1. Typical application diagram

9.2.1 Design Requirements

9.2.1.1 Power Considerations

Ensure the desired supply voltage is within the range specified in the *Recommended Operating Conditions*. The supply voltage sets the device's electrical characteristics as described in the *Electrical Characteristics*.

The positive voltage supply must be capable of sourcing current equal to the total current to be sourced by all outputs of the CD74HC132 plus the maximum static supply current, I_{CC}, listed in *Electrical Characteristics* and any transient current required for switching. The logic device can only source as much current as is provided by the positive supply source. Be sure not to exceed the maximum total current through V_{CC} listed in the *Absolute Maximum Ratings*.

The ground must be capable of sinking current equal to the total current to be sunk by all outputs of the CD74HC132 plus the maximum supply current, I_{CC}, listed in *Electrical Characteristics*, and any transient current required for switching. The logic device can only sink as much current as can be sunk into its ground connection. Be sure not to exceed the maximum total current through GND listed in the *Absolute Maximum Ratings*.

The CD74HC132 can drive a load with a total capacitance less than or equal to 50 pF while still meeting all of the datasheet specifications. Larger capacitive loads can be applied, however it is not recommended to exceed 50 pF.

The CD74HC132 can drive a load with total resistance described by $R_L \geq V_O / I_O$, with the output voltage and current defined in the *Electrical Characteristics* table with V_{OH} and V_{OL}. When outputting in the high state, the

Copyright © 2021 Texas Instruments Incorporated

output voltage in the equation is defined as the difference between the measured output voltage and the supply voltage at the V_{CC} pin.

Total power consumption can be calculated using the information provided in CMOS Power Consumption and Cpd Calculation.

Thermal increase can be calculated using the information provided in Thermal Characteristics of Standard Linear and Logic (SLL) Packages and Devices.

CAUTION

The maximum junction temperature, $T_{J(max)}$ listed in the *Absolute Maximum Ratings*, is an additional limitation to prevent damage to the device. Do not violate any values listed in the *Absolute Maximum Ratings*. These limits are provided to prevent damage to the device.

9.2.1.2 Input Considerations

Input signals must cross $V_{t-(min)}$ to be considered a logic LOW, and $V_{t+(max)}$ to be considered a logic HIGH. Do not exceed the maximum input voltage range found in the *Absolute Maximum Ratings*.

Unused inputs must be terminated to either V_{CC} or ground. These can be directly terminated if the input is completely unused, or they can be connected with a pull-up or pull-down resistor if the input is to be used sometimes, but not always. A pull-up resistor is used for a default state of HIGH, and a pull-down resistor is used for a default state of LOW. The resistor size is limited by drive current of the controller, leakage current into the CD74HC132, as specified in the *Electrical Characteristics*, and the desired input transition rate. A 10-kΩ resistor value is often used due to these factors.

The CD74HC132 has no input signal transition rate requirements because it has Schmitt-trigger inputs.

Another benefit to having Schmitt-trigger inputs is the ability to reject noise. Noise with a large enough amplitude can still cause issues. To know how much noise is too much, please refer to the $\Delta V_{T(min)}$ in the *Electrical Characteristics*. This hysteresis value will provide the peak-to-peak limit.

Unlike what happens with standard CMOS inputs, Schmitt-trigger inputs can be held at any valid value without causing huge increases in power consumption. The typical additional current caused by holding an input at a value other than V_{CC} or ground is plotted in the *Typical Characteristics*.

Refer to the *Feature Description* section for additional information regarding the inputs for this device.

9.2.1.3 Output Considerations

The positive supply voltage is used to produce the output HIGH voltage. Drawing current from the output will decrease the output voltage as specified by the V_{OH} specification in the *Electrical Characteristics*. The ground voltage is used to produce the output LOW voltage. Sinking current into the output will increase the output voltage as specified by the V_{OL} specification in the *Electrical Characteristics*.

Push-pull outputs that could be in opposite states, even for a very short time period, should never be connected directly together. This can cause excessive current and damage to the device.

Two channels within the same device with the same input signals can be connected in parallel for additional output drive strength.

Unused outputs can be left floating. Do not connect outputs directly to V_{CC} or ground.

Refer to *Feature Description* section for additional information regarding the outputs for this device.

9.2.2 Detailed Design Procedure

1. Add a decoupling capacitor from V_{CC} to GND. The capacitor needs to be placed physically close to the device and electrically close to both the V_{CC} and GND pins. An example layout is shown in the *Layout* section.

2. Ensure the capacitive load at the output is ≤ 50 pF. This is not a hard limit, however it will ensure optimal performance. This can be accomplished by providing short, appropriately sized traces from the CD74HC132 to the receiving device(s).
3. Ensure the resistive load at the output is larger than (V_{CC} / $I_{O(max)}$) Ω. This will ensure that the maximum output current from the *Absolute Maximum Ratings* is not violated. Most CMOS inputs have a resistive load measured in megaohms; much larger than the minimum calculated above.
4. Thermal issues are rarely a concern for logic gates, however the power consumption and thermal increase can be calculated using the steps provided in the application report, CMOS Power Consumption and Cpd Calculation.

9.2.3 Application Curve

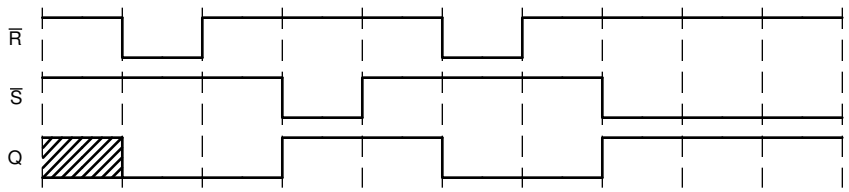

Figure 9-2. Application timing diagram

Copyright © 2021 Texas Instruments Incorporated

10 Power Supply Recommendations

The power supply can be any voltage between the minimum and maximum supply voltage rating located in the *Recommended Operating Conditions*. Each V_{CC} terminal should have a good bypass capacitor to prevent power disturbance. A 0.1-µF capacitor is recommended for this device. It is acceptable to parallel multiple bypass caps to reject different frequencies of noise. The 0.1-µF and 1-µF capacitors are commonly used in parallel. The bypass capacitor should be installed as close to the power terminal as possible for best results, as shown in given example layout image.

11 Layout

11.1 Layout Guidelines

When using multiple-input and multiple-channel logic devices inputs must not ever be left floating. In many cases, functions or parts of functions of digital logic devices are unused; for example, when only two inputs of a triple-input AND gate are used or only 3 of the 4 buffer gates are used. Such unused input pins must not be left unconnected because the undefined voltages at the outside connections result in undefined operational states. All unused inputs of digital logic devices must be connected to a logic high or logic low voltage, as defined by the input voltage specifications, to prevent them from floating. The logic level that must be applied to any particular unused input depends on the function of the device. Generally, the inputs are tied to GND or V_{CC}, whichever makes more sense for the logic function or is more convenient.

11.2 Layout Example

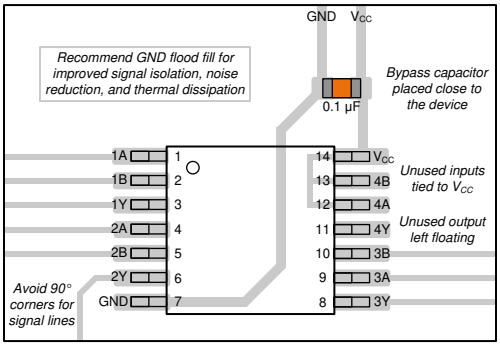

Figure 11-1. Example layout for the CD74HC132.

12 Device and Documentation Support

TI offers an extensive line of development tools. Tools and software to evaluate the performance of the device, generate code, and develop solutions are listed below.

12.1 Documentation Support

12.2 Receiving Notification of Documentation Updates

To receive notification of documentation updates, navigate to the device product folder on ti.com. Click on *Subscribe to updates* to register and receive a weekly digest of any product information that has changed. For change details, review the revision history included in any revised document.

12.3 Support Resources

TI E2E™ support forums are an engineer's go-to source for fast, verified answers and design help — straight from the experts. Search existing answers or ask your own question to get the quick design help you need.

Linked content is provided "AS IS" by the respective contributors. They do not constitute TI specifications and do not necessarily reflect TI's views; see TI's Terms of Use.

12.4 Trademarks

TI E2E™ is a trademark of Texas Instruments.
All trademarks are the property of their respective owners.

12.5 Electrostatic Discharge Caution

This integrated circuit can be damaged by ESD. Texas Instruments recommends that all integrated circuits be handled with appropriate precautions. Failure to observe proper handling and installation procedures can cause damage.

ESD damage can range from subtle performance degradation to complete device failure. Precision integrated circuits may be more susceptible to damage because very small parametric changes could cause the device not to meet its published specifications.

12.6 Glossary

TI Glossary This glossary lists and explains terms, acronyms, and definitions.

Copyright © 2021 Texas Instruments Incorporated

13 Mechanical, Packaging, and Orderable Information

The following pages include mechanical, packaging, and orderable information. This information is the most current data available for the designated devices. This data is subject to change without notice and revision of this document. For browser-based versions of this data sheet, refer to the left-hand navigation.

PACKAGING INFORMATION

Orderable part number	Status (1)	Material type (2)	Package | Pins	Package qty | Carrier	RoHS (3)	Lead finish/ Ball material (4)	MSL rating/ Peak reflow (5)	Op temp (°C)	Part marking (6)
CD54HC132F3A	Active	Production	CDIP (J) | 14	25 | TUBE	No	SNPB	N/A for Pkg Type	-55 to 125	CD54HC132F3A
CD54HC132F3A.A	Active	Production	CDIP (J) | 14	25 | TUBE	No	SNPB	N/A for Pkg Type	-55 to 125	CD54HC132F3A
CD74HC132E	Active	Production	PDIP (N) | 14	25 | TUBE	Yes	NIPDAU | NIPDAU	N/A for Pkg Type	-55 to 125	CD74HC132E
CD74HC132E.A	Active	Production	PDIP (N) | 14	25 | TUBE	Yes	NIPDAU	N/A for Pkg Type	-55 to 125	CD74HC132E
CD74HC132EE4	Active	Production	PDIP (N) | 14	25 | TUBE	Yes	NIPDAU	N/A for Pkg Type	-55 to 125	CD74HC132E
CD74HC132M	Obsolete	Production	SOIC (D) | 14	-	-	Call TI	Call TI	-55 to 125	HC132M
CD74HC132M96	Active	Production	SOIC (D) | 14	2500 | LARGE T&R	Yes	NIPDAU | SN	Level-1-260C-UNLIM	-55 to 125	HC132M
CD74HC132M96.A	Active	Production	SOIC (D) | 14	2500 | LARGE T&R	Yes	NIPDAU	Level-1-260C-UNLIM	-55 to 125	HC132M
CD74HC132M96G4	Active	Production	SOIC (D) | 14	2500 | LARGE T&R	Yes	NIPDAU	Level-1-260C-UNLIM	-55 to 125	HC132M
CD74HC132M96G4.A	Active	Production	SOIC (D) | 14	2500 | LARGE T&R	Yes	NIPDAU	Level-1-260C-UNLIM	-55 to 125	HC132M
CD74HC132MT	Obsolete	Production	SOIC (D) | 14	-	-	Call TI	Call TI	-55 to 125	HC132M

(1) **Status:** For more details on status, see our product life cycle.

(2) **Material type:** When designated, preproduction parts are prototypes/experimental devices, and are not yet approved or released for full production. Testing and final process, including without limitation quality assurance, reliability performance testing, and/or process qualification, may not yet be complete, and this item is subject to further changes or possible discontinuation. If available for ordering, purchases will be subject to an additional waiver at checkout, and are intended for early internal evaluation purposes only. These items are sold without warranties of any kind.

(3) **RoHS values:** Yes, No, RoHS Exempt. See the TI RoHS Statement for additional information and value definition.

(4) **Lead finish/Ball material:** Parts may have multiple material finish options. Finish options are separated by a vertical ruled line. Lead finish/Ball material values may wrap to two lines if the finish value exceeds the maximum column width.

(5) **MSL rating/Peak reflow:** The moisture sensitivity level ratings and peak solder (reflow) temperatures. In the event that a part has multiple moisture sensitivity ratings, only the lowest level per JEDEC standards is shown. Refer to the shipping label for the actual reflow temperature that will be used to mount the part to the printed circuit board.

(6) **Part marking:** There may be an additional marking, which relates to the logo, the lot trace code information, or the environmental category of the part.

Multiple part markings will be inside parentheses. Only one part marking contained in parentheses and separated by a "~" will appear on a part. If a line is indented then it is a continuation of the previous line and the two combined represent the entire part marking for that device.

Important Information and Disclaimer: The information provided on this page represents TI's knowledge and belief as of the date that it is provided. TI bases its knowledge and belief on information provided by third parties, and makes no representation or warranty as to the accuracy of such information. Efforts are underway to better integrate information from third parties. TI has taken and continues to take reasonable steps to provide representative and accurate information but may not have conducted destructive testing or chemical analysis on incoming materials and chemicals. TI and TI suppliers consider certain information to be proprietary, and thus CAS numbers and other limited information may not be available for release.

In no event shall TI's liability arising out of such information exceed the total purchase price of the TI part(s) at issue in this document sold by TI to Customer on an annual basis.

OTHER QUALIFIED VERSIONS OF CD54HC132, CD74HC132 :

- Catalog : CD74HC132
- Military : CD54HC132

NOTE: Qualified Version Definitions:

- Catalog - TI's standard catalog product
- Military - QML certified for Military and Defense Applications

TAPE AND REEL INFORMATION

REEL DIMENSIONS

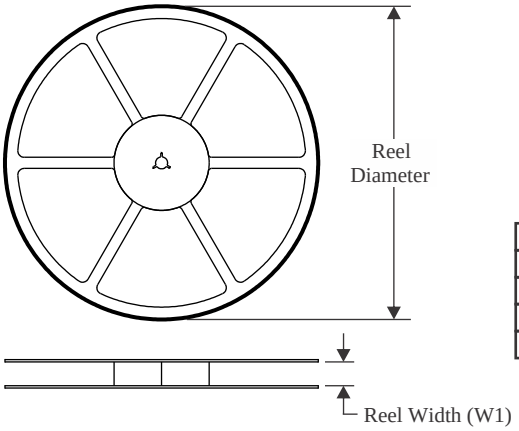

TAPE DIMENSIONS

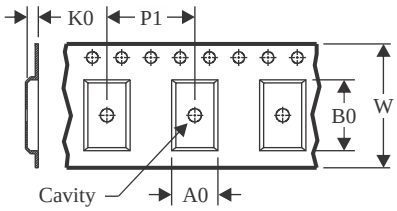

A0	Dimension designed to accommodate the component width
B0	Dimension designed to accommodate the component length
K0	Dimension designed to accommodate the component thickness
W	Overall width of the carrier tape
P1	Pitch between successive cavity centers

QUADRANT ASSIGNMENTS FOR PIN 1 ORIENTATION IN TAPE

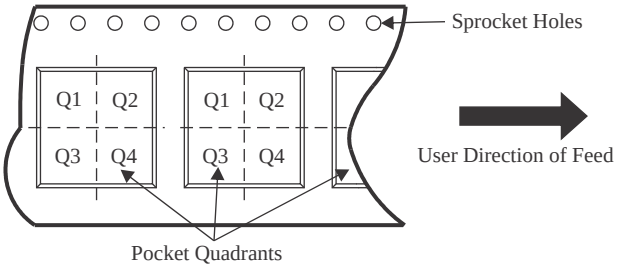

*All dimensions are nominal

Device	Package Type	Package Drawing	Pins	SPQ	Reel Diameter (mm)	Reel Width W1 (mm)	A0 (mm)	B0 (mm)	K0 (mm)	P1 (mm)	W (mm)	Pin1 Quadrant
CD74HC132M96	SOIC	D	14	2500	330.0	16.4	6.5	9.0	2.1	8.0	16.0	Q1
CD74HC132M96G4	SOIC	D	14	2500	330.0	16.4	6.5	9.0	2.1	8.0	16.0	Q1

TAPE AND REEL BOX DIMENSIONS

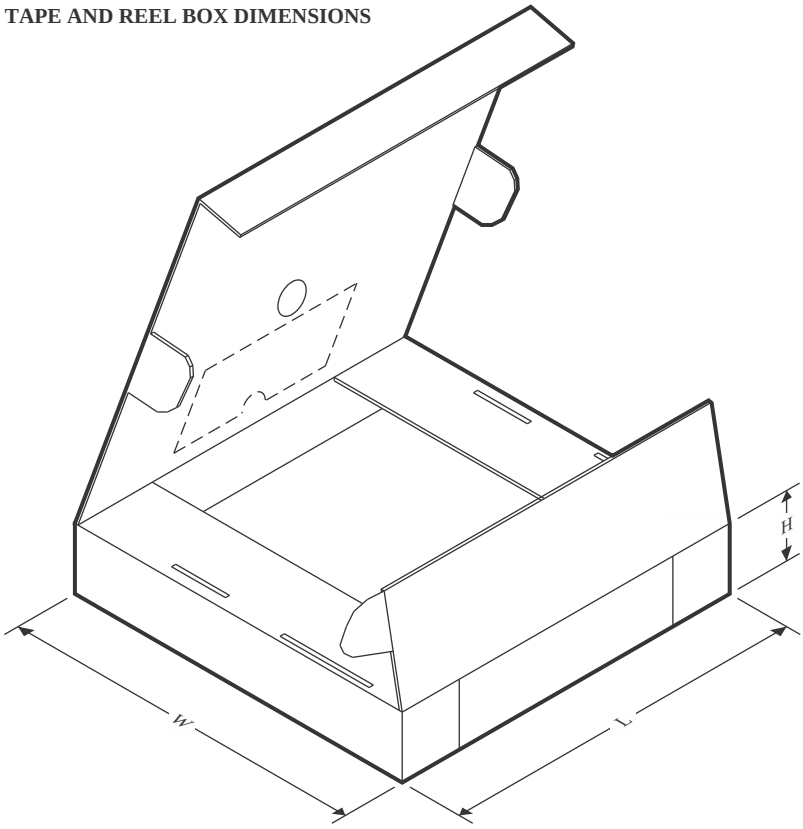

*All dimensions are nominal

Device	Package Type	Package Drawing	Pins	SPQ	Length (mm)	Width (mm)	Height (mm)
CD74HC132M96	SOIC	D	14	2500	356.0	356.0	35.0
CD74HC132M96G4	SOIC	D	14	2500	356.0	356.0	35.0

TUBE

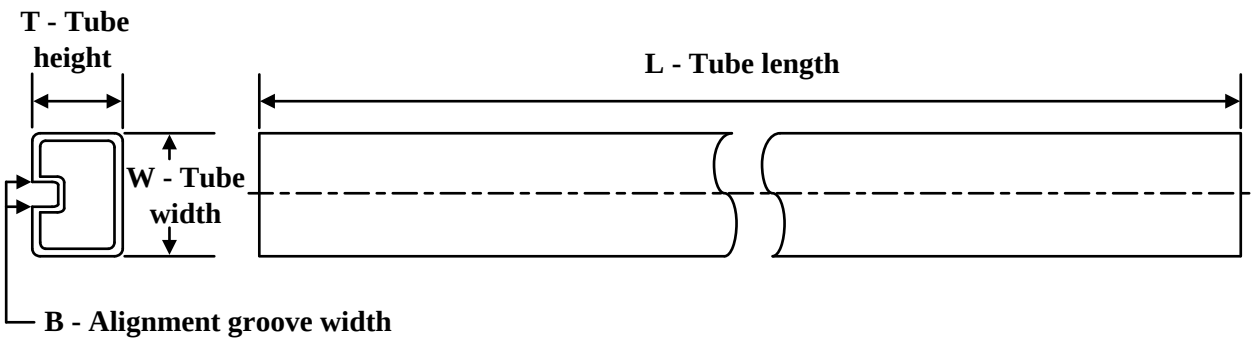

*All dimensions are nominal

Device	Package Name	Package Type	Pins	SPQ	L (mm)	W (mm)	T (µm)	B (mm)
CD74HC132E	N	PDIP	14	25	506	13.97	11230	4.32
CD74HC132E	N	PDIP	14	25	506	13.97	11230	4.32
CD74HC132E.A	N	PDIP	14	25	506	13.97	11230	4.32
CD74HC132E.A	N	PDIP	14	25	506	13.97	11230	4.32
CD74HC132EE4	N	PDIP	14	25	506	13.97	11230	4.32
CD74HC132EE4	N	PDIP	14	25	506	13.97	11230	4.32

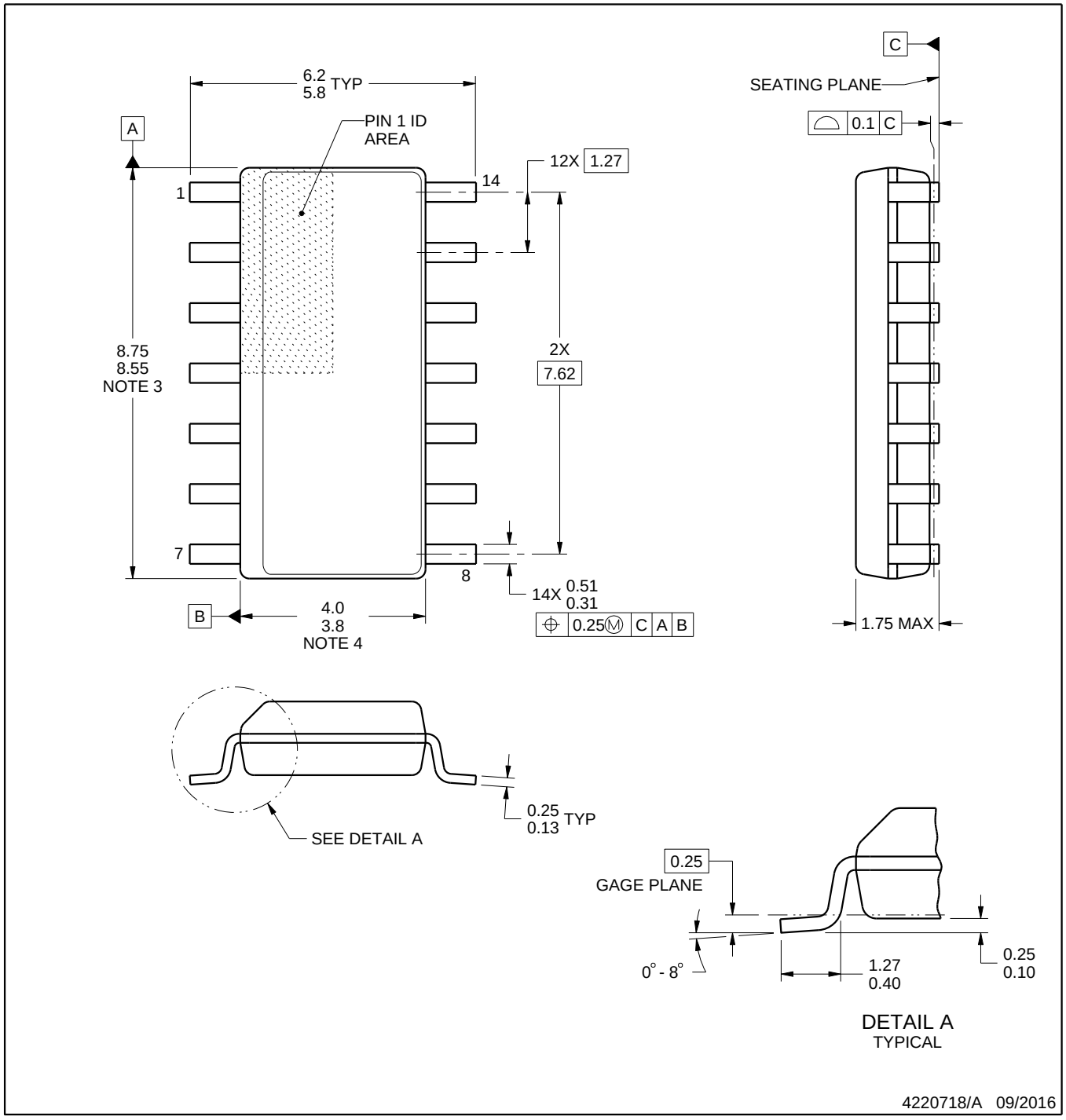

NOTES:

1. All linear dimensions are in millimeters. Dimensions in parenthesis are for reference only. Dimensioning and tolerancing per ASME Y14.5M.
2. This drawing is subject to change without notice.
3. This dimension does not include mold flash, protrusions, or gate burrs. Mold flash, protrusions, or gate burrs shall not exceed 0.15 mm, per side.
4. This dimension does not include interlead flash. Interlead flash shall not exceed 0.43 mm, per side.
5. Reference JEDEC registration MS-012, variation AB.

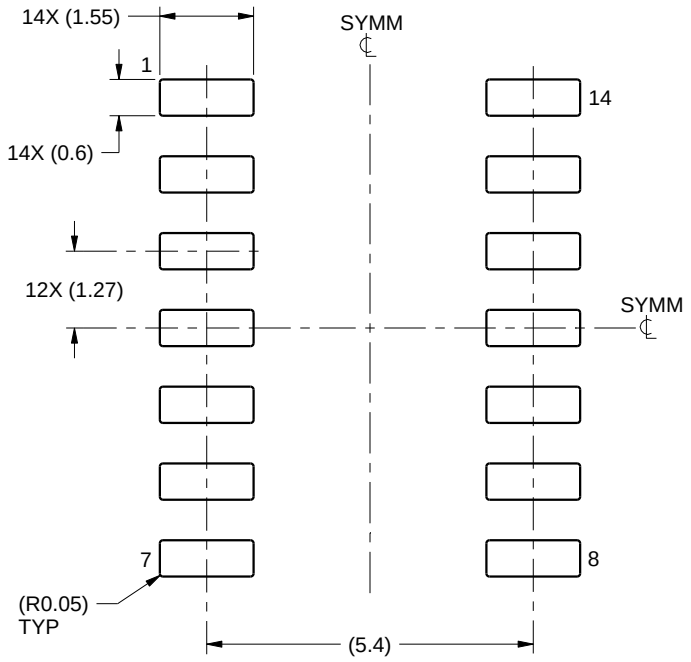

LAND PATTERN EXAMPLE
SCALE:8X

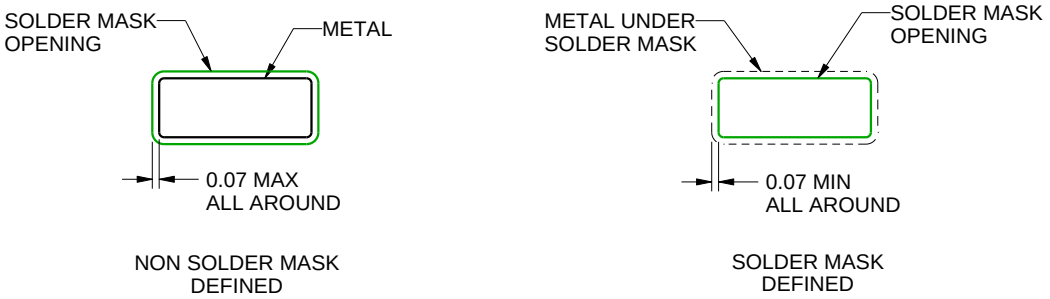

SOLDER MASK DETAILS

4220718/A 09/2016

NOTES: (continued)

6. Publication IPC-7351 may have alternate designs.
7. Solder mask tolerances between and around signal pads can vary based on board fabrication site.

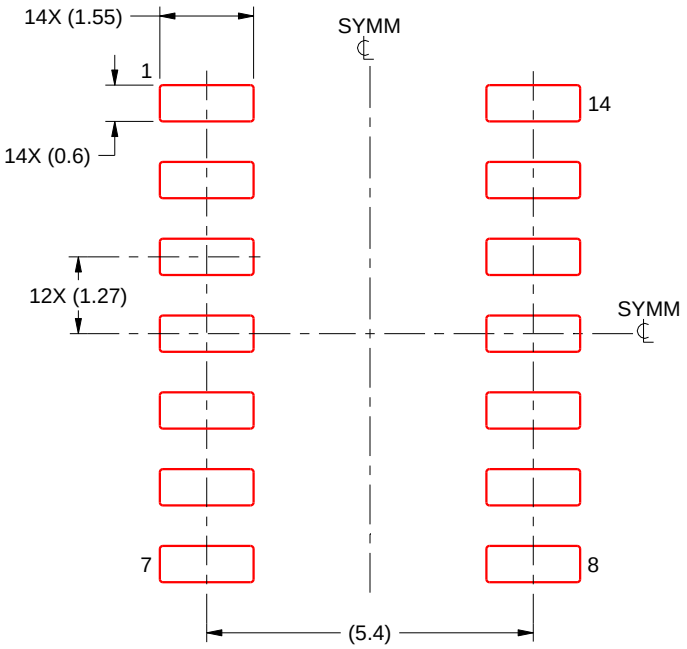

SOLDER PASTE EXAMPLE
BASED ON 0.125 mm THICK STENCIL
SCALE:8X

4220718/A 09/2016

NOTES: (continued)

8. Laser cutting apertures with trapezoidal walls and rounded corners may offer better paste release. IPC-7525 may have alternate design recommendations.
9. Board assembly site may have different recommendations for stencil design.

J 14 CDIP - 5.08 mm max height

CERAMIC DUAL IN LINE PACKAGE

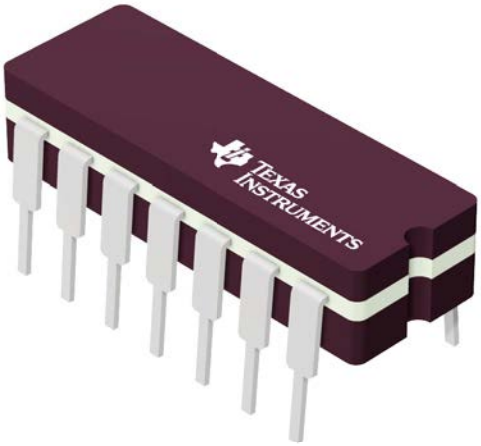

Images above are just a representation of the package family, actual package may vary.
Refer to the product data sheet for package details.

4040083-5/G

PACKAGE OUTLINE

J0014A

CDIP - 5.08 mm max height

CERAMIC DUAL IN LINE PACKAGE

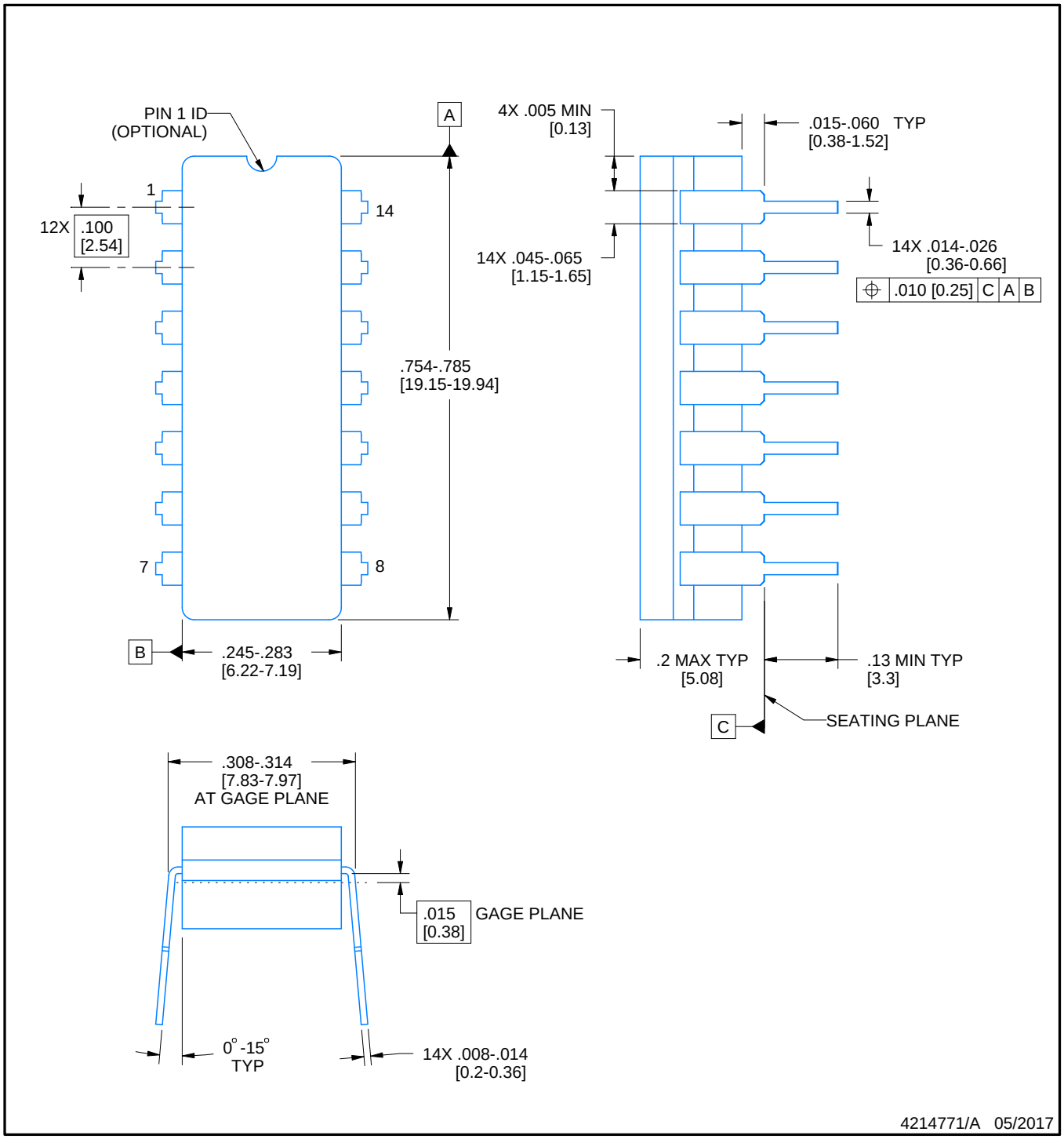

NOTES:

1. All controlling linear dimensions are in inches. Dimensions in brackets are in millimeters. Any dimension in brackets or parenthesis are for reference only. Dimensioning and tolerancing per ASME Y14.5M.
2. This drawing is subject to change without notice.
3. This package is hermitically sealed with a ceramic lid using glass frit.
4. Index point is provided on cap for terminal identification only and on press ceramic glass frit seal only.
5. Falls within MIL-STD-1835 and GDIP1-T14.

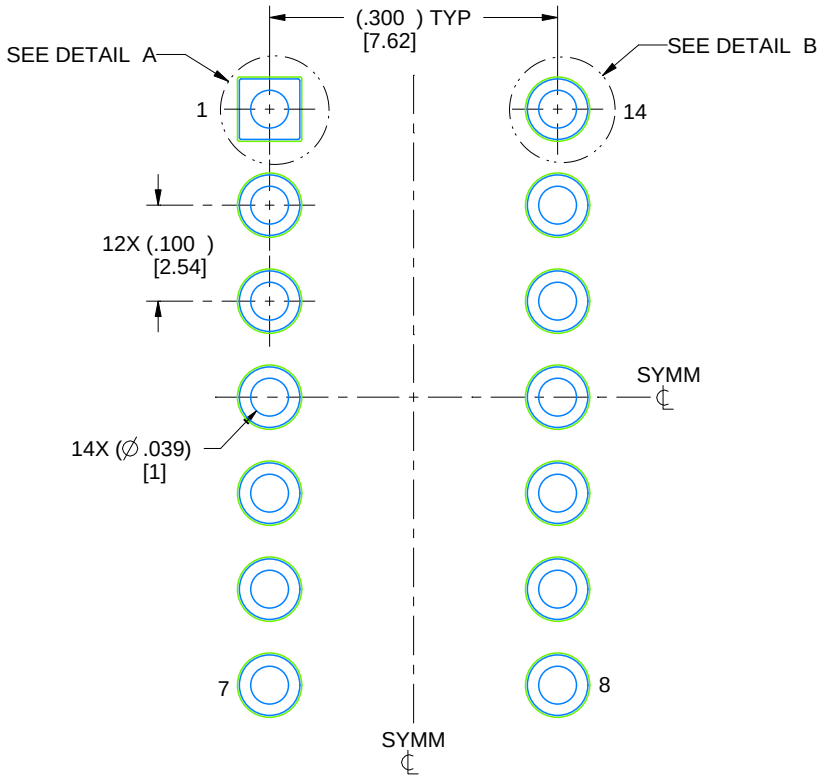

LAND PATTERN EXAMPLE
NON-SOLDER MASK DEFINED
SCALE: 5X

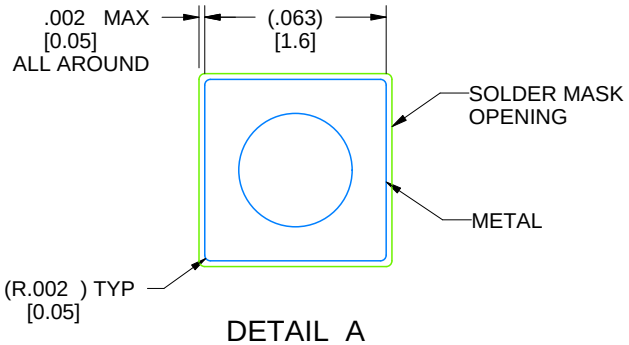

DETAIL A
SCALE: 15X

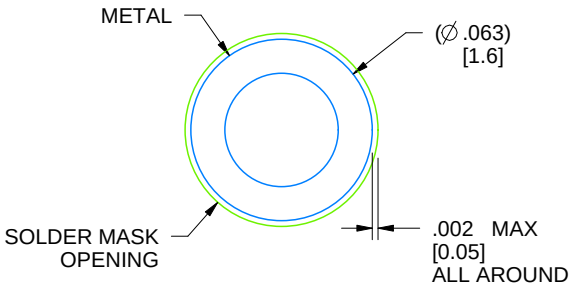

DETAIL B
13X, SCALE: 15X

4214771/A 05/2017

N (R–PDIP–T**) PLASTIC DUAL–IN–LINE PACKAGE

16 PINS SHOWN

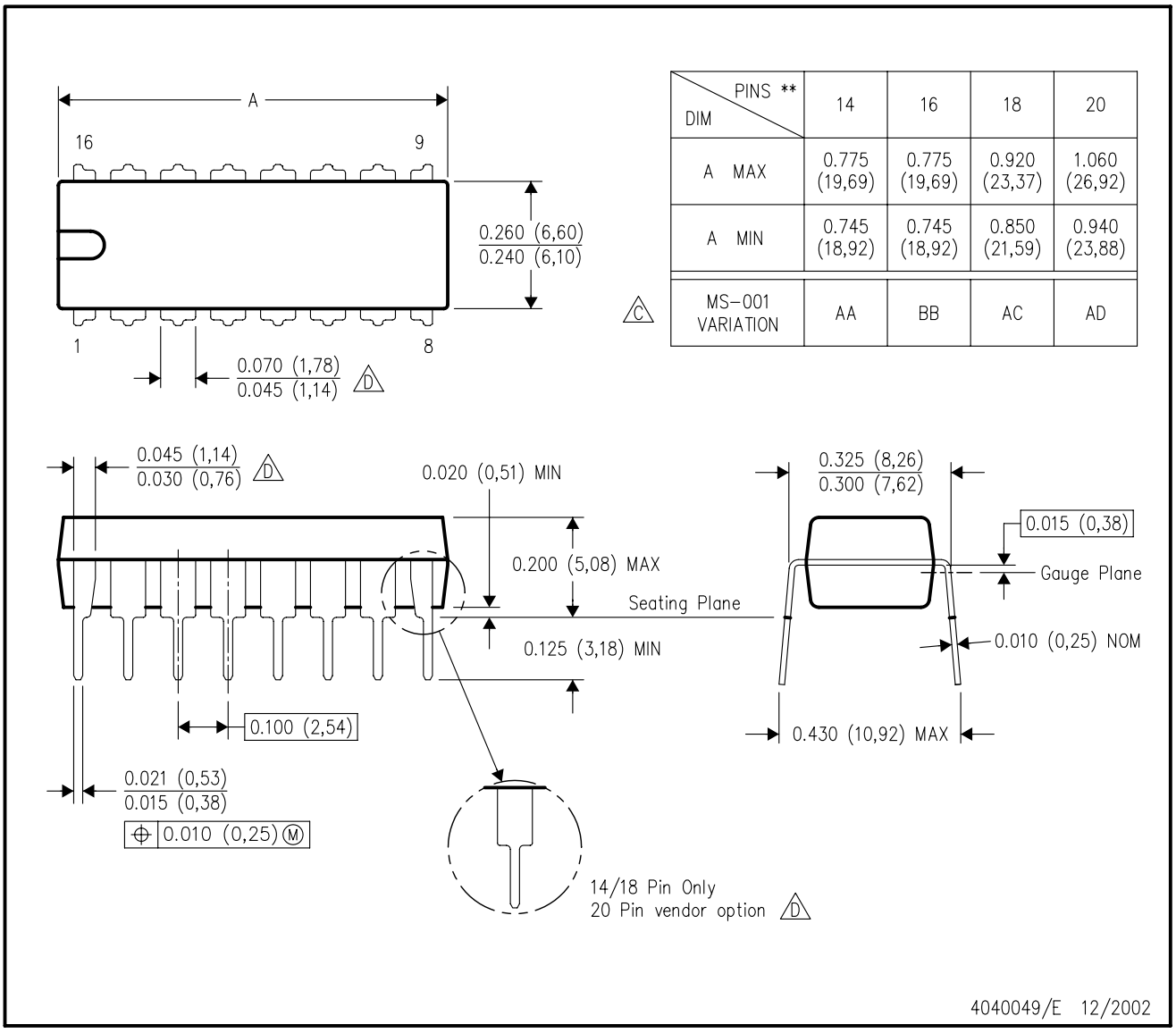

DIM \ PINS **	14	16	18	20
A MAX	0.775 (19,69)	0.775 (19,69)	0.920 (23,37)	1.060 (26,92)
A MIN	0.745 (18,92)	0.745 (18,92)	0.850 (21,59)	0.940 (23,88)
MS–001 VARIATION (C)	AA	BB	AC	AD

NOTES:
A. All linear dimensions are in inches (millimeters).
B. This drawing is subject to change without notice.
C. Falls within JEDEC MS–001, except 18 and 20 pin minimum body length (Dim A).
D. The 20 pin end lead shoulder width is a vendor option, either half or full width.

IMPORTANT NOTICE AND DISCLAIMER

TI PROVIDES TECHNICAL AND RELIABILITY DATA (INCLUDING DATA SHEETS), DESIGN RESOURCES (INCLUDING REFERENCE DESIGNS), APPLICATION OR OTHER DESIGN ADVICE, WEB TOOLS, SAFETY INFORMATION, AND OTHER RESOURCES “AS IS” AND WITH ALL FAULTS, AND DISCLAIMS ALL WARRANTIES, EXPRESS AND IMPLIED, INCLUDING WITHOUT LIMITATION ANY IMPLIED WARRANTIES OF MERCHANTABILITY, FITNESS FOR A PARTICULAR PURPOSE OR NON-INFRINGEMENT OF THIRD PARTY INTELLECTUAL PROPERTY RIGHTS.

These resources are intended for skilled developers designing with TI products. You are solely responsible for (1) selecting the appropriate TI products for your application, (2) designing, validating and testing your application, and (3) ensuring your application meets applicable standards, and any other safety, security, regulatory or other requirements.

These resources are subject to change without notice. TI grants you permission to use these resources only for development of an application that uses the TI products described in the resource. Other reproduction and display of these resources is prohibited. No license is granted to any other TI intellectual property right or to any third party intellectual property right. TI disclaims responsibility for, and you will fully indemnify TI and its representatives against, any claims, damages, costs, losses, and liabilities arising out of your use of these resources.

TI’s products are provided subject to TI’s Terms of Sale or other applicable terms available either on ti.com or provided in conjunction with such TI products. TI’s provision of these resources does not expand or otherwise alter TI’s applicable warranties or warranty disclaimers for TI products.

TI objects to and rejects any additional or different terms you may have proposed.

Mailing Address: Texas Instruments, Post Office Box 655303, Dallas, Texas 75265
Copyright © 2025, Texas Instruments Incorporated