6-A, 5-V INPUT NON-ISOLATED WIDE OUTPUT ADJUST POWER MODULE

FEATURES

- **Up to 6-A Output Current**
- **5-V Input Voltage**
- **Wide-Output Voltage Adjust (0.8 V to 3.6 V)**
- **Efficiencies up to 95%**
- **135 W/in^3 Power Density**
- **On/Off Inhibit**
- **Pre-Bias Startup**
- **Under-Voltage Lockout**
- **Operating Temperature –40°C to 85°C**
- **Auto-Track™ Sequencing**
- **Output Overcurrent Protection (Non-Latching, Auto-Reset)**
- **IPC Lead Free 2**
- **Safety Agency Approvals: UL/IEC/CSA-22.2 60950-1**
- **Point-of-Load Alliance (POLA) Compatible**

Nominal size = 0.87in × 0.5in (22.1mm × 12.57mm)

DESCRIPTION

The PTH05050W is one of the smallest non-isolated power modules from Texas Instruments that features Auto-Track™ sequencing. Auto-Track simplifies supply voltage sequencing in power systems by enabling modules to track each other, or any other external voltage, during power up and power down.

Although small in size (0.87 in × 0.5 in), these modules are rated for up to 6 A of output current, and are an ideal choice in applications where space, performance, and a power-up sequencing capability are important attributes.

The product provides high-performance step-down conversion from a 5-V input bus voltage. The output voltage of the PTH05050W can be set to any voltage over the range, 0.8 V to 3.6 V, using single resistor.

Other operating features include an on/off inhibit, output voltage adjust (trim), and output over-current protection. For high efficiency these parts employ a synchronous rectifier output stage, but a pre-bias hold-off capability ensures that the output will not sink current during startup.

Target applications include telecom, industrial, and general purpose circuits, including low-power dual-voltage systems that use a DSP, microprocessor, ASIC, or FPGA.

Package options include both throughhole and surface mount configurations.

Please be aware that an important notice concerning availability, standard warranty, and use in critical applications of Texas Instruments semiconductor products and disclaimers thereto appears at the end of this data sheet.

Auto-Track, TMS320 are trademarks of Texas Instruments.

PRODUCTION DATA information is current as of publication date. Products conform to specifications per the terms of the Texas Instruments standard warranty. Production processing does not necessarily include testing of all parameters.

Copyright © 2003–2009, Texas Instruments Incorporated

STANDARD APPLICATION

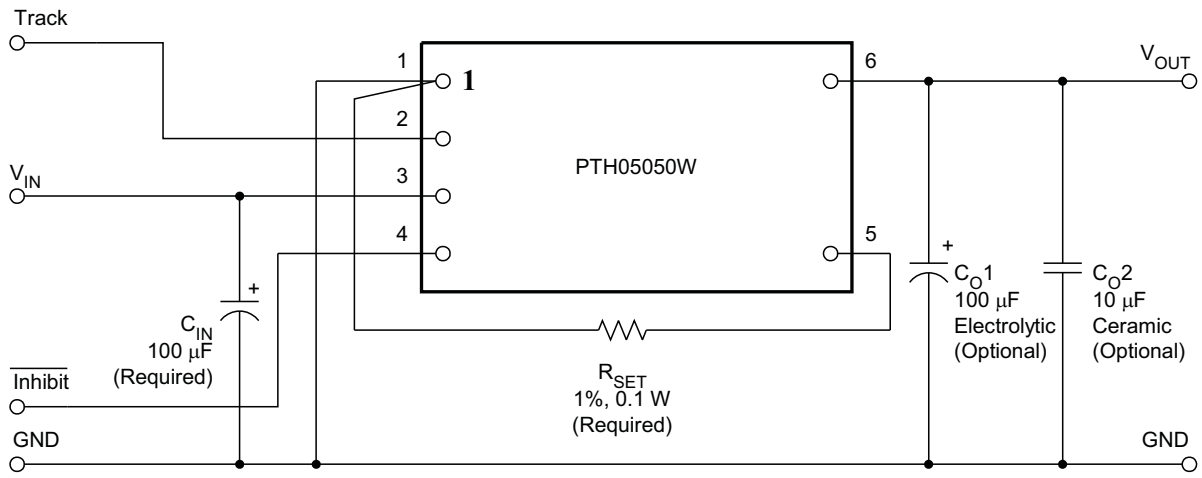

A. Resistor R_{SET} is required to set the output voltage to a value higher than 0.8 V. See Specification Table for values.
B. Capacitor C_{IN} is required (100 µF).
C. Capacitor C_O1 is optional (100 µF).
D. Capacitor C_O2 is optional (10 µF). Ceramic capacitance can be added to reduce output ripple.

ORDERING INFORMATION

For the most current package and ordering information, see the Package Option Addendum at the end of this datasheet, or see the TI website at www.ti.com.

ABSOLUTE MAXIMUM RATINGS

voltages are with respect to GND

				UNIT
V_{track}	Track input voltage			–0.3 V to V_I +0.3 V
T_A	Operating temperature range	Over V_I range		–40°C to 85°C (1)
T_{wave}	Wave solder temperature	Surface temperature of module body or pins **(5 seconds maximum)**	AH & AD suffix	260°C
T_{reflow}	Solder reflow temperature	Surface temperature of module body or pins	AS suffix	235°C (2)
			AZ suffix	260°C (2)
T_{stg}	Storage temperature	Storage temperature of module removed from shipping package		–55°C to 125°C
T_{pkg}	Packaging temperature	Shipping Tray or Tape and Reel storage or bake temperature		45°C
	Mechanical shock	Per Mil-STD-883D, Method 2002.3, 1 msec, 1/2 Sine, mounted		500 G
	Mechanical vibration	Mil-STD-883D, Method 2007.2, 20-2000 Hz		20 G
	Weight			2.9 grams
	Flammability	Meets UL94V-O		

(1) For operation below 0°C the external capacitors must have stable characteristics. Use either a low ESR tantalum, OS-CON, or ceramic capacitor.
(2) During soldering of surface mount package versions, do not elevate peak temperature of the module, pins or internal components above the stated maximum.

Copyright © 2003–2009, Texas Instruments Incorporated

ELECTRICAL CHARACTERISTICS

T_A = 25°C; V_I = 5 V; V_O = 3.3 V; C_I = 100 µF, C_{O1} = 0 µF, C_{O2} = 0 µF, and I_o = $I_o$max (unless otherwise stated)

PARAMETER		TEST CONDITIONS		PTH05050W			UNIT
				MIN	TYP	MAX	
I_O	Output current	0.8 V ≤ V_O ≤ 3.6 V	85°C, natural convection	0		6(1)	A
V_I	Input voltage range	Over I_O range		4.5		5.5	V
V_{Oadj}	Output adjust range	Over I_O range		0.8		3.6	V
V_{Otol}	Set-point voltage tolerance					±2(2)	%V_o
ΔReg_{temp}	Temperature variation	–40°C < T_A < 85°C			±0.5		%V_o
ΔReg_{line}	Line regulation	Over V_I range			±10		mV
ΔReg_{load}	Load regulation	Over I_O range			±12		mV
ΔReg_{tot}	Total output variation	Includes set-point, line, load, –40°C ≤ T_A ≤ 85°C				±3(2)	%V_o
η	Efficiency	I_O = 4 A	R_{SET} = 698 Ω, V_o = 3.3 V		95%		
			R_{SET} = 2.21 kΩ, V_o = 2.5 V		93%		
			R_{SET} = 4.12 kΩ, V_o = 2.0 V		91%		
			R_{SET} = 5.49 kΩ, V_o = 1.8 V		90%		
			R_{SET} = 8.87 kΩ, V_o = 1.5 V		89%		
			R_{SET} = 17.4 kΩ, V_o = 1.2 V		87%		
			R_{SET} = 36.5 kΩ, V_o = 1.0 V		85%		
V_r	V_o ripple (pk-pk)	20 MHz bandwidth, Co_2 = 10 µF ceramic			20(3)		mVpp
$I_O$trip	Over-current threshold	Reset, followed by auto-recovery			12		A
t_{tr}	Transient response	1 A/µs load step, 50 to 100% $I_O$max, C_{O1} = 100 µF	Recovery time		70		µSec
ΔV_{tr}			V_o over/undershoot		100		mV
I_{IL}track	Track input current (pin 2)	Pin to GND				–130(4)	µA
dV_{track}/dt	Track slew rate capability	C_O ≤ C_O(max)				1	V/ms
UVLO	Under-voltage lockout	V_I increasing			4.3	4.45	V
		V_I decreasing		3.4	3.7		
V_{IH}	Inhibit Control (pin 4)	Input high voltage, Referenced to GND				Open(4)	V
V_{IL}		Input low voltage, Referenced to GND		–0.2		0.6	
I_{IL} inhibit		Input low current, Pin 4 to GND			130		µA
I_{in} inh	Input standby current	Inhibit (pin 4) to GND, Track (pin 2) open			10		mA
f_s	Switching frequency	Over V_I and I_O ranges		550	600	650	kHz
C_I	External input capacitance			100(5)			µF
C_{O1}, C_{O2}	External output capacitance	Capacitance value	Non-ceramic	0	100(6)	3300(7)	µF
			Ceramic	0		300	
		Equivalent series resistance (non-ceramic)		4(8)			mΩ
MTBF	Reliability	Per Bellcore TR-332, 50% stress, T_A = 40°C, ground benign		6			10^6 Hrs

(1) No derating is required when the module is soldered directly to a 4-layer PCB with 1 oz. copper.
(2) The set-point voltage tolerance is affected by the tolerance and stability of R_{SET}. The stated limit is unconditionally met if R_{SET} has a tolerance of 1% with 100 ppm/°C or better temperature stability.
(3) The pk-pk output ripple voltage is measured with an external 10 µF ceramic capacitor. See the standard application schematic.
(4) This control pin has an internal pull-up to the input voltage. If it is left open-circuit the module will operate when input power is applied. A small, low leakage (<100 nA) MOSFET or open-drain/collector voltage supervisor IC is recommended for control. Do not place an external pull-up on this pin. For further information, consult the related application note.
(5) A 100 µF input capacitor are required for proper operation. The capacitor must be rated for a minimum of 300 mA rms of ripple current.
(6) An external output capacitor is not required for basic operation. Adding 100 µF of distributed capacitance at the load will improve the transient response.
(7) This is the calculated maximum. The minimum ESR limitation will often result in a lower value. When controlling the Track pin using a voltage supervisor, C_O(max) is reduced to 2200 µF. Consult the application notes for further guidance.
(8) This is the typical ESR for all the electrolytic (non-ceramic) output capacitance. Use 7 mΩ as he minimum when using max-ESR values to calculate.

Copyright © 2003–2009, Texas Instruments Incorporated

DEVICE INFORMATION

Terminal Functions

TERMINAL		DESCRIPTION
NAME	NO.	
Vin	3	The positive input voltage power node to the module, which is referenced to common GND.
Vout	6	The regulated positive power output with respect to the GND node.
GND	1	This is the common ground connection for the Vin and Vout power connections. It is also the 0 VDC reference for the control inputs.
Vo Adjust	5	A 0.05 W 1% resistor must be directly connected between this pin and (GND) to set the output voltage to a value higher than 0.8 V. The temperature stability of the resistor should be 100 ppm/°C (or better). The set point range for the output voltage is from 0.8 V to 3.6 V. The resistor value required for a given output voltage may be calculated from the following formula. If left open circuit, the output voltage will default to its lowest value. For further information on output voltage adjustment consult the related application note. $R_{set} = 10\ k\Omega \times \frac{0.8\ V}{V_{out} - 0.8\ V} - 2.49\ k\Omega$ The specification table gives the preferred resistor values for a number of standard output voltages.
Inhibit(1)	4	The Inhibit pin is an open-collector/drain negative logic input that is referenced to GND. Applying a low-level ground signal to this input disables the module's output and turns off the output voltage. When the Inhibit control is active, the input current drawn by the regulator is significantly reduced. If the Inhibit pin is left open-circuit, the module will produce an output whenever a valid input source is applied.
Track	2	This is an analog control input that enables the output voltage to follow an external voltage. This pin becomes active typically 20 ms after the input voltage has been applied, and allows direct control of the output voltage from 0 V up to the nominal set-point voltage. Within this range the output will follow the voltage at the Track pin on a volt-for-volt basis. When the control voltage is raised above this range, the module regulates at its set-point voltage. The feature allows the output voltage to rise simultaneously with other modules powered from the same input bus. If unused, this input should be connected to V_{in}. *Note: Due to the under-voltage lockout feature, the output of the module cannot follow its own input voltage during power up. For more information, consult the related application note.*

(1) Denotes negative logic:
Open = Normal operation
Ground = Function active

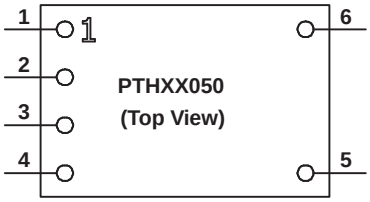

Copyright © 2003–2009, Texas Instruments Incorporated

TYPICAL CHARACTERISTICS

CHARACTERISTIC DATA; V_I = 5 V (1) (2)

EFFICIENCY vs LOAD CURRENT

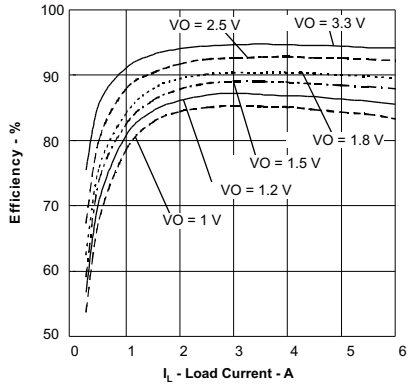

Figure 1.

OUTPUT RIPPLE vs LOAD CURRENT (See Note 3 to Table)

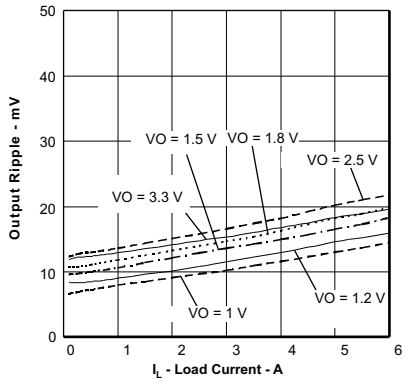

Figure 2.

POWER DISSIPATION vs LOAD CURRENT

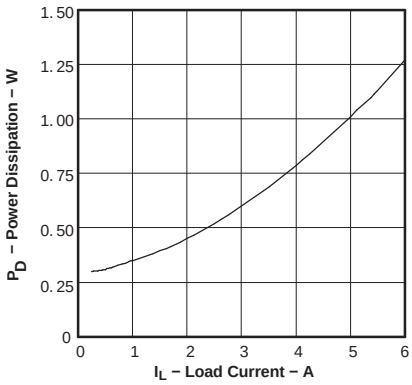

Figure 3.

TEMPREATURE DERATING vs OUTPUT CURRENT

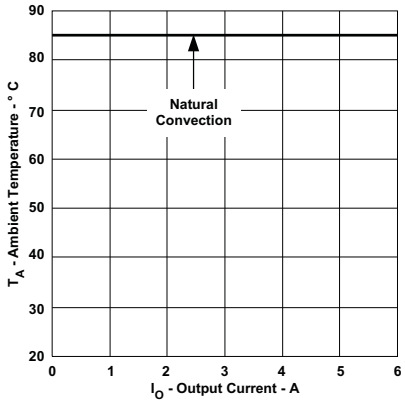

Figure 4.

(1) Characteristic data has been developed from actual products tested at 25°C. This data is considered typical data for the converter. Applies to Figure 1, Figure 2, and Figure 3.
(2) SOA curves represent the conditions at which internal components are at or below the manufacturer's maximum operating temperatures. Derating limits apply to modules soldered directly to a 4 in. × 4 in. double-sided PCB with 1 oz. copper. Applies to Figure 4.

Copyright © 2003–2009, Texas Instruments Incorporated

APPLICATION INFORMATION

ADJUSTING THE OUTPUT VOLTAGE

The V_o Adjust control (pin 5) sets the output voltage to value higher than 0.8 V. The adjustment range of the PTH05050W is from 0.8 V to 3.6 V. The adjustment method requires the addition of a single external resistor, R_{SET}, that must be connected directly between the V_OAdjust and GND pins. Table 1 gives the standard value of the external resistor for a number of standard voltages, along with the actual output voltage that this resistance value provides.

For other output voltages the value of the required resistor can either be calculated using the following formula, or simply selected from the range of values given in Table 2. Figure 5 shows the placement of the required resistor.

$$R_{set} = 10\ k\Omega \times \frac{0.8\ V}{V_{out} - 0.8\ V} - 2.49\ k\Omega \quad (1)$$

Table 1. Values of R_{SET} for Standard Output Voltages

V_O (Standard) (V)	R_{SET} (Standard Value) (kΩ)	V_O (Actual) (V)
3.3	0.698	3.309
2.5	2.21	2.502
2	4.12	2.010
1.8	5.49	1.803
1.5	8.87	1.504
1.2	17.4	1.202
1	36.5	1.005
0.8	Open	0.8

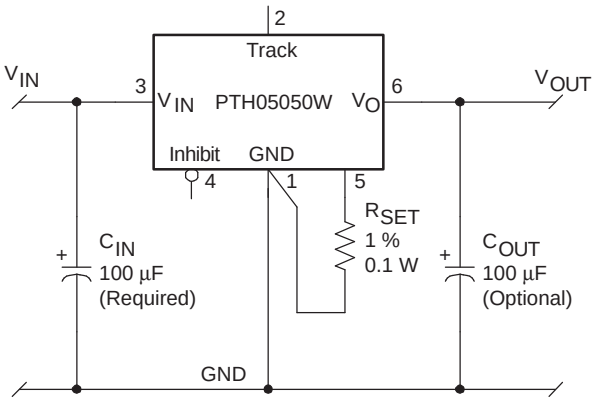

Figure 5. V_O Adjust Resistor Placement

NOTES:

1. A 0.05-W resistor may be used. The tolerance should be 1%, with temperature stability of 100 ppm/°C (or better). Place the resistor as close to the regulator as possible. Connect the resistor directly between pins 5 and 1 using dedicated PCB traces.
2. Never connect capacitors from V_OAdjust to either GND or V_O. Any capacitance added to the V_OAdjust pin will affect the stability of the regulator.

Copyright © 2003–2009, Texas Instruments Incorporated

Table 2. Output Voltage Set-Point Resistor Values

V_O Req'd (V)	R_{SET}(kΩ)	V_O Req'd (V)	R_{SET}(kΩ)
0.800	Open	1.90	4.78
0.825	318	1.95	4.47
0.850	158	2.00	4.18
0.875	104	2.05	3.91
0.900	77.5	2.10	3.66
0.925	61.5	2.15	3.44
0.950	50.8	2.20	3.22
0.975	43.2	2.25	3.03
1.000	37.5	2.30	2.84
1.025	33.1	2.35	2.67
1.050	29.5	2.40	2.51
1.075	26.6	2.45	2.36
1.100	24.2	2.50	2.22
1.125	22.1	2.55	2.08
1.150	20.4	2.60	1.95
1.175	18.8	2.65	1.83
1.200	17.5	2.70	1.72
1.225	16.3	2.75	1.61
1.250	15.3	2.80	1.51
1.275	14.4	2.85	1.41
1.300	13.5	2.90	1.32
1.325	12.7	2.95	1.23
1.350	12.1	3.00	1.15
1.375	11.4	3.05	1.07
1.400	10.8	3.10	0.988
1.425	10.3	3.15	0.914
1.450	9.82	3.20	0.843
1.475	9.36	3.25	0.775
1.50	8.94	3.30	0.710
1.55	8.18	3.35	0.647
1.60	7.51	3.40	0.587
1.65	6.92	3.45	0.529
1.70	6.4	3.50	0.473
1.75	5.93	3.55	0.419
1.80	5.51	3.60	0.367
1.85	5.13		

Copyright © 2003–2009, Texas Instruments Incorporated

CAPACITOR RECOMMENDATIONS FOR THE PTH03050W AND PTH05050W

Input Capacitor

The recommended input capacitor(s) is determined by the 100 µF minimum capacitance and 300 mArms minimum ripple current rating.

Ripple current, less than 100 mΩ equivalent series resistance (ESR), and temperature are the major considerations when selecting input capacitors. Unlike polymer tantalum, regular tantalum capacitors have a recommended minimum voltage rating of 2 ×(maximum DC voltage + AC ripple). This is standard practice to ensure reliability.

For improved ripple reduction on the input bus, ceramic capacitors may used to compliment electrolytic types to achieve the minimum required capacitance.

Output Capacitors (Optional)

For applications with load transients (sudden changes in load current), regulator response will benefit from an external output capacitance. The recommended output capacitance of 100 µF will allow the module to meet its transient response specification (see product data sheet). For most applications, a high quality computer-grade aluminum electrolytic capacitor is adequate. These capacitors provide decoupling over the frequency range, 2 kHz to 150 kHz, and are suitable for ambient temperatures above 0°C. For operation below 0°C tantalum, ceramic or OS-CON type capacitors are recommended. When using one or more non-ceramic capacitors, the calculated equivalent ESR should be no lower than 4 mΩ (7 mΩ using the manufacturer's maximum ESR for a single capacitor). A list of preferred low-ESR type capacitors are identified in Table 3.

Ceramic Capacitors

Above 150 kHz the performance of aluminum electrolytic capacitors becomes less effective. To further improve the reflected input ripple current or the output transient response, multilayer ceramic capacitors can also be added. Ceramic capacitors have very low ESR and their resonant frequency is higher than the bandwidth of the regulator. When used on the output their combined ESR is not critical as long as the total value of ceramic capacitance does not exceed 300 µF. Also, to prevent the formation of local resonances, do not place more than five identical ceramic capacitors in parallel with values of 10 µF or greater.

Tantalum Capacitors

Tantalum type capacitors can be used at both the input and output, and are recommended for applications where the ambient operating temperature can be less than 0°C. The AVX TPS, Sprague 593D/594/595 and Kemet T495/T510 capacitor series are suggested over many other tantalum types due to their higher rated surge, power dissipation, and ripple current capability. As a caution many general purpose tantalum capacitors have considerably higher ESR, reduced power dissipation and lower ripple current capability. These capacitors are also less reliable as they have reduced power dissipation and surge current ratings. Tantalum capacitors that do not have a stated ESR or surge current rating are not recommended for power applications.

When specifying OS-CON and polymer tantalum capacitors for the output, the minimum ESR limit will be encountered well before the maximum capacitance value is reached.

Capacitor Table

Table 3 identifies the characteristics of capacitors from a number of vendors with acceptable ESR and ripple current (RMS) ratings. The recommended number of capacitors required at both the input and output buses is identified for each capacitor type.

This is not an extensive capacitor list. Capacitors from other vendors are available with comparable specifications. Those listed are for guidance. The RMS ripple current rating and ESR (at 100 kHz) are critical parameters necessary to insure both optimum regulator performance and long capacitor life.

Copyright © 2003–2009, Texas Instruments Incorporated

Table 3. Input/Output Capacitors[1]

Capacitor Vendor, Type/Series (Style)	Capacitor Characteristics					Quantity		Vendor Part Number
	Working Voltage (V)	Value (μF)	Max ESR at 100 kHz (Ω)	Max Ripple Current at 85°C (Irms) (mA)	Physical Size (mm)	Input Bus	Output Bus	
Panasonic								
FC, Aluminum (Radial)	25	100	0.300	450	8×10	1	1	EEVFC1E101P
WA, Poly-Aluminum (SMD)	10	120	0.035	2800	8.3×6.9	1	≤5	EEFWA1A121P
Panasonic, Aluminum								
FC (Radial)	16	220	0.150	555	10×10.2	1	1	EEUFC1C221
FK (SMD)	16	330	0.160	600	8×10.2	1	1	EEVFK1C331P
United Chemi-Con								
FX, Os-con (Radial)	10	100	0.040	2100	6.3×9.8	1	≤5	10FS100M
PXA, Poly-Aluminum (SMD)	10	120	0.027	2430	8×6.7	1	≤4	PXA10VC121MH80TP
MVZ, Aluminum (SMD)	16	220	0.170	450	8×10	1	1	MVZ25VC221MH10TP
PS, Poly-Aluminum (Radial)	10	100	0.024	4420	8×11.5	1	≤4	10PS270MH11
Nichicon Aluminum								
WG(SMD)	35	100	0.150	670	10×10	1	1	UWG1V101MNR1GS
PM (Radial)	25	150	0.160	460	10×11.5	1	1	UPM1E151MPH
F55, Tantalum (SMD)	10	100	0.055	2000	7.7×4.3	1	1	F551A107MN
Sanyo								
SVP, (SMD)	10	120	0.040	>2500	7×8	1	≤5	10SVP120M
Sp, Os-con (Radial)	16	100	0.025	>2800	6.3×9.8	1	≤4	16SPS100M
TPE, Poscap Polymer(SMD)	10	220	0.025	>2400	7.3×5.7	1	≤4	10TPE220ML
AVX, Tantalum								
TPS (SMD)	10	100	0.100	>1090	7.3×4.3×4.1	1	≤5	TPSD107M010R0100
	10	220	0.100	>1414	7.3×4.3×4.1	1	≤5	TPSV227M010R0100
Kemet								
T520, Poly-Alum (SMD)	10	100	0.800	1200	7.3×5.7×4.0	1	1	T520D107M010AS
T495, Tantalum (SMD)	10	100	0.100	>1100	7.3×5.7×4.0	1	1	T495X107M010AS
A700, Poly-Alum (SMD)	6.3	100	0.018	2900	7.3×5.7×4.0	1	≤3	A700D107M006AT
Vishay-Sprague								
594D, Tantalum (SMD)	10	150	0.090	1100	7.3×6.0×4.1	1	1	594D157X0010C2T
595D, Tantalum (SMD)	10	120	0.140	>1000	7.3×6.0×4.1	1	1	595D127X0010D2T
94SA, Poly-Aluminum (Radial)	10	100	0.030	2670	8×10.5	1	≤4	94SA107X0010EBP
Kemet, Ceramic X5R (SMD)	16	10	0.002	–	1210 case	1	≤5	C1210C106M4PAC
	6.3	47	0.002		3225 mm	2[2]	≤5	C1210C476K9PAC
Murata, Ceramic X5R (SMD)	6.3	100	0.002	–	1210 case	1	≤3	GRM32ER60J107M
	6.3	47			3225 mm	2[2]	≤5	GRM32ER60J476M
	16	22				5	≤5	GRM32ER61C226K
	16	10				1[3]	≤5	GRM32ER61C106K
TDK, Ceramic X5R (SMD)	6.3	100	0.002	–	1210 case	1	≤3	C3225X5R0J107MT
	6.3	47			3225 mm	2[1]	≤5	C3225X5R0J476MT
	16	22				5	≤5	C3225X5R1C226MT
	16	10				1[2]	≤5	C3225X5R1C106MT

(1) **Capacitor Supplier Verification**
1.Please verify availability of capacitors identified in this table. Capacitor suppliers may recommend alternative part numbers because of limited availability or obsolete products. In some instances, the capacitor product life cycle may be in decline and have short-term consideration for obsolescence.
RoHS, Lead-free and Material Details
2.Please consult capacitor suppliers regarding material composition, RoHS status, lead-free status, and manufacturing process requirements. Component designators or part number deviations can occur when material composition or soldering requirements are updated.
(2) Total capacitance of 94 μF is acceptable based on the combined ripple current rating.
(3) Small ceramic capacitors may be used to complement electrolytic types at the input to reduce high-frequency ripple current.

Copyright © 2003–2009, Texas Instruments Incorporated

Copyright © 2003–2009, Texas Instruments Incorporated

Designing for Very Fast Load Transients

The transient response of the DC/DC converter has been characterized using a load transient with a di/dt of 1 A/µs. The typical voltage deviation for this load transient is given in the data sheet specification table using the optional value of output capacitance. As the di/dt of a transient is increased, the response of a converter's regulation circuit ultimately depends on its output capacitor decoupling network. This is an inherent limitation with any DC/DC converter once the speed of the transient exceeds its bandwidth capability. If the target application specifies a higher di/dt or lower voltage deviation, the requirement can only be met with additional output capacitor decoupling. In these cases special attention must be paid to the type, value and ESR of the capacitors selected.

If the transient performance requirements exceed that specified in the data sheet, or the total amount of load capacitance is above 3000 µF, the selection of output capacitors becomes more important.

Features of the PTH Family of Non-Isolated Wide Output Adjust Power Modules

POLA™ Compatibility

The PTH/PTV family of non-isolated, wide-output adjust power modules from Texas Instruments are optimized for applications that require a flexible, high performance module that is small in size. Each of these products are POLA™ compatible. POLA-compatible products are produced by a number of manufacturers, and offer customers advanced, non-isolated modules with the same footprint and form factor. POLA parts are also assured to be interoperable, thereby providing customers with true second-source availability.

From the basic, *Just Plug it In* functionality of the 6-A modules, to the 30-A rated feature-rich PTHxx030, these products were designed to be very flexible, yet simple to use. The features vary with each product. Table 4 provides a quick reference to the features by product series and input bus voltage.

Table 4. Operating Features by Series and Input Bus Voltage

Series	Input Bus (V)	I_O (A)	Adjust (Trim)	On/Off Inhibit	Over-Current	Pre-Bias Startup	Auto-Track™	Margin Up/Down	Output Sense	Thermal Shutdown
PTHxx050	3.3/5	6	•	•	•	•	•			
	12	6	•	•	•	•	•			
PTHxx060	3.3/5	10	•	•	•	•	•	•	•	
	12	8	•	•	•	•	•	•	•	
PTHxx010	3.3/5	15	•	•	•	•	•	•	•	
	12	12	•	•	•	•	•	•	•	
PTVxx010	3.3/5	8	•	•	•	•	•		•	
	12	8	•	•	•	•	•		•	
PTHxx020	3.3/5	22	•	•	•	•	•	•	•	•
	12	18	•	•	•	•	•	•	•	•
PTVxx020	3.3/5	18	•	•	•	•	•		•	•
	12	16	•	•	•	•	•		•	•
PTHxx030	3.3/5	30	•	•	•	•	•	•	•	•
	12	26	•	•	•	•	•	•	•	•

For simple point-of-use applications, the PTHxx050 provides operating features such as an on/off inhibit, output voltage trim, pre-bias startup, and over-current protection. The PTHxx060 (10 A), and PTHxx010 (15/12 A) include an output voltage sense, and margin up/down controls. Then the higher output current, PTHxx020 and PTHxx030 products incorporate over-temperature shutdown protection.

The PTVxx010 and PTVxx020 are similar parts offered in a vertical, single in-line pin (SIP) profile, at slightly lower current ratings. Visit www.ti.com to view other power modules not listed in Table 4.

All of the products referenced in Table 4 include Auto-Track™. This feature was specifically designed to simplify the task of sequencing the supply voltages in a power system. This and other features are described in the following sections.

Copyright © 2003–2009, Texas Instruments Incorporated

Soft-Start Power Up

The Auto-Track feature allows the power-up of multiple modules to be directly controlled from the *Track* pin. However in a stand-alone configuration, or when the Auto-Track feature is not being used, the *Track* pin should be directly connected to the input voltage, V_{in} (see Figure 6).

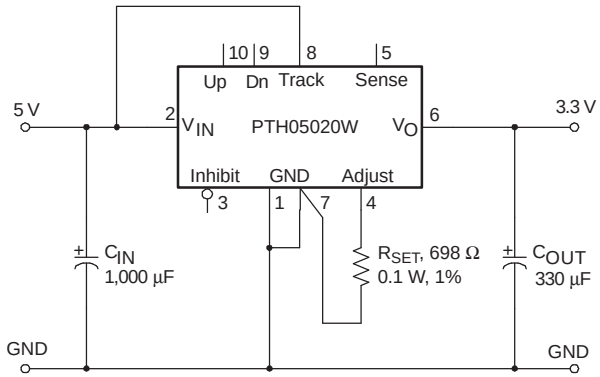

Figure 6.

When the *Track* pin is connected to the input voltage the Auto-Track function is permanently disengaged. This allows the module to power up entirely under the control of its internal soft-start circuitry. When power up is under soft-start control, the output voltage rises to the set-point at a quicker and more linear rate.

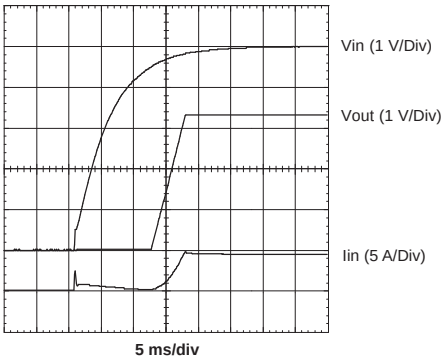

Figure 7.

From the moment a valid input voltage is applied, the soft-start control introduces a short time delay (typically 5ms-10ms) before allowing the output voltage to rise. The output then progressively rises to the module's setpoint voltage. Figure 7 shows the soft-start power-up characteristic of the 22-A output product (PTH05020W), operating from a 5-V input bus and configured for a 3.3-V output. The waveforms were measured with a 5-A resistive load, with Auto-Track disabled. The initial rise in input current when the input voltage first starts to rise is the charge current drawn by the input capacitors. Power-up is complete within 15 ms.

Over-Current Protection

For protection against load faults, all modules incorporate output over-current protection. Applying a load that exceeds the regulator's over-current threshold will cause the regulated output to shut down. Following shutdown a module will periodically attempt to recover by initiating a soft-start power-up. This is described as a *hiccup* mode of operation, whereby the module continues in a cycle of successive shutdown and power up until the load fault is removed. During this period, the average current flowing into the fault is significantly reduced. Once the fault is removed, the module automatically recovers and returns to normal operation.

Copyright © 2003–2009, Texas Instruments Incorporated

Output On/Off Inhibit

For applications requiring output voltage on/off control, each series of the PTH family incorporates an output Inhibit control pin. The inhibit feature can be used wherever there is a requirement for the output voltage from the regulator to be turned off. The power modules function normally when the Inhibit pin is left open-circuit, providing a regulated output whenever a valid source voltage is connected to V_I with respect to GND.

Figure 8 shows the typical application of the inhibit function. Note the discrete transistor (Q_1). The Inhibit control has its own internal pull-up to V_{in} potential. The input is not compatible with TTL logic devices. An open-collector (or open-drain) discrete transistor is recommended for control.

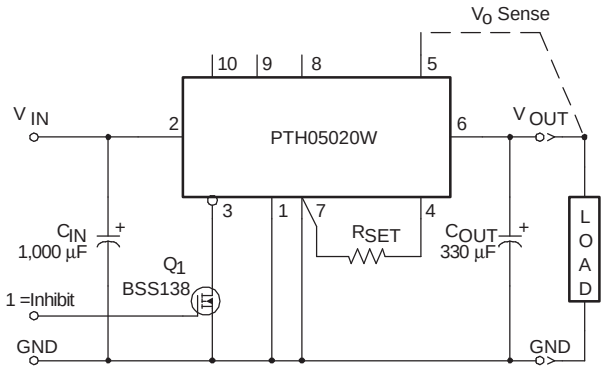

Figure 8.

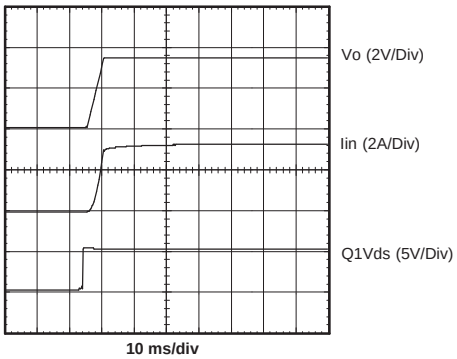

Figure 9.

Turning Q_1 on applies a low voltage to the Inhibit control and disables the output of the module. If Q_1 is then turned off, the module will execute a soft-start power-up. A regulated output voltage is produced within 20 msec. Figure 9 shows the typical rise in both the output voltage and input current, following the turn-off of Q_1. The turn off of Q1 corresponds to the rise in the waveform, Q_1 V_{ds}. The waveforms were measured with a 5-A load.

Auto-Track™ Function

The Auto-Track function is unique to the PTH/PTV family, and is available with all POLA products. Auto-Track was designed to simplify the amount of circuitry required to make the output voltage from each module power up and power down in sequence. The sequencing of two or more supply voltages during power up is a common requirement for complex mixed-signal applications that use dual-voltage VLSI ICs such as the TMS320™ DSP family, microprocessors, and ASICs.

How Auto-Track™ Works

Auto-Track works by forcing the module output voltage to follow a voltage presented at the *Track* control pin(1). This control range is limited to between 0 V and the module set-point voltage. Once the track-pin voltage is raised above the set-point voltage, the module output remains at its set-point(2). As an example, if the *Track* pin of a 2.5-V regulator is at 1 V, the regulated output is 1 V. If the voltage at the *Track* pin rises to 3 V, the regulated output does not go higher than 2.5 V.

Under Auto-Track control, the regulated output from the module follows the voltage at its *Track* pin on a volt-for-volt basis. By connecting the *Track* pin of a number of these modules together, the output voltages follow a common signal during power up and power down. The control signal can be an externally generated master ramp waveform, or the output voltage from another power supply circuit(3). For convenience, the *Track* input incorporates an internal RC-charge circuit. This operates off the module input voltage to produce a suitable rising waveform at power up.

Copyright © 2003–2009, Texas Instruments Incorporated

Typical Auto-Track™ Application

The basic implementation of Auto-Track allows for simultaneous voltage sequencing of a number of Auto-Track compliant modules. Connecting the *Track* inputs of two or more modules forces their track input to follow the same collective RC-ramp waveform, and allows their power-up sequence to be coordinated from a common track control signal. This can be an open-collector (or open-drain) device, such as a power-up reset voltage supervisor IC. See U3 in Figure 10.

To coordinate a power-up sequence, the Track control must first be pulled to ground potential. This should be done at or before input power is applied to the modules. The ground signal should be maintained for at least 20 ms after input power has been applied. This brief period gives the modules time to complete their internal soft-start initialization[(4)], enabling them to produce an output voltage. A low-cost supply voltage supervisor IC, that includes a built-in time delay, is an ideal component for automatically controlling the track inputs at power up.

Figure 10 shows how the TPS3808G50 supply voltage supervisor IC (U3) can be used to coordinate the sequenced power-up of two 5-V input Auto-Track modules. The output of the TPS3808G50 supervisor becomes active above an input voltage of 0.8 V, enabling it to assert a ground signal to the common track control well before the input voltage has reached the module's undervoltage lockout threshold. The ground signal is maintained until approximately 27 ms after the input voltage has risen above U3's voltage threshold, which is 4.65 V. The 27-ms time period is controlled by the capacitor C3. The value of 4700 pF provides sufficient time delay for the modules to complete their internal soft-start initialization. The output voltage of each module remains at zero until the track control voltage is allowed to rise. When U3 removes the ground signal, the track control voltage automatically rises. This causes the output voltage of each module to rise simultaneously with the other modules, until each reaches its respective set-point voltage.

Figure 11 shows the output voltage waveforms from the circuit of Figure 10 after input voltage is applied to the circuit. The waveforms, V_O1 and V_O2 represent the output voltages from the two power modules, U1 (3.3 V) and U2 (1.8 V), respectively. V_{TRK}, V_O1, and V_O2 are shown rising together to produce the desired simultaneous power-up characteristic.

The same circuit also provides a power-down sequence. When the input voltage falls below U3's voltage threshold, the ground signal is re-applied to the common track control. This pulls the track inputs to zero volts, forcing the output of each module to follow, as shown in Figure 12. In order for a simultaneous power-down to occur, the track inputs must be pulled low before the input voltage has fallen below the modules' undervoltage lockout. This is an important constraint. Once the modules recognize that a valid input voltage is no longer present, their outputs can no longer follow the voltage applied at their track input. During a power-down sequence, the fall in the output voltage from the modules is limited by the maximum output capacitance and the Auto-Track slew rate. If the *Track* pin is pulled low at a slew rate greater than 1 V/ms, the discharge of the output capacitors will induce large currents which could exceed the peak current rating of the module. This will result in a reduction in the maximum allowable output capacitance as listed in the Electrical Characteristics table. When controlling the *Track* pin of the PTH05050W using a voltage supervisor IC, the slew rate is increased, therefore $C_O$max is reduced to 2200 μF.

Notes on Use of Auto-Track™

1. The Auto-Track function tracks almost any voltage ramp during power up, and is compatible with ramp speeds of up to 1 V/ms.
2. The *Track* pin voltage must be allowed to rise above the module set-point voltage before the module regulates at its adjusted set-point voltage.
3. The absolute maximum voltage that may be applied to the *Track* pin is the input voltage V_I.
4. The module cannot follow a voltage at its track control input until it has completed its soft-start initialization. This takes about 20 ms from the time that a valid voltage has been applied to its input. During this period, it is recommended that the *Track* pin be held at ground potential.
5. The Auto-Track function is disabled by connecting the *Track* pin to the input voltage (V_I). When Auto-Track is disabled, the output voltage rises at a quicker and more linear rate after input power has been applied.

Copyright © 2003–2009, Texas Instruments Incorporated

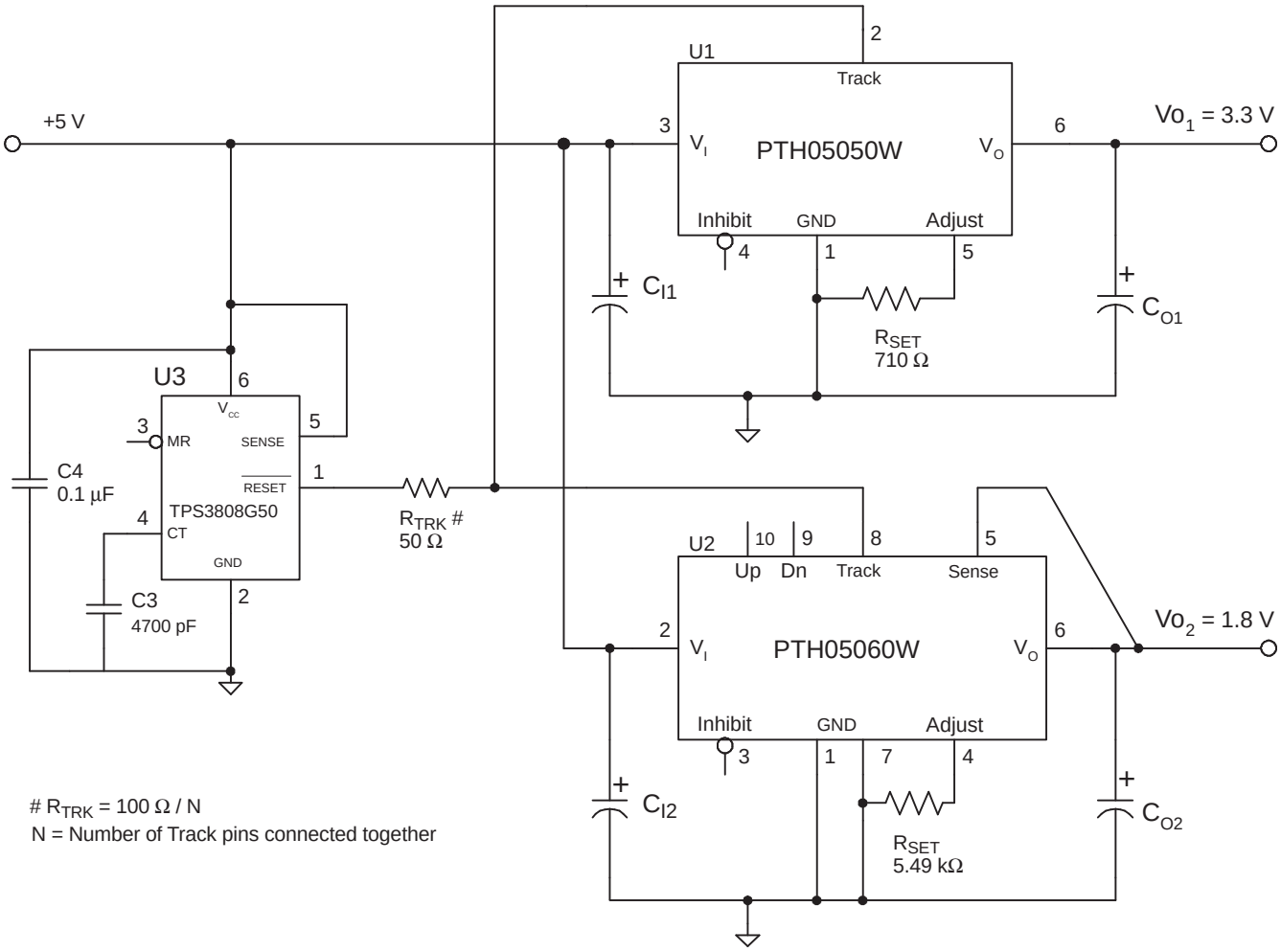

Figure 10. Sequenced Power Up and Power Down Using Auto-Track

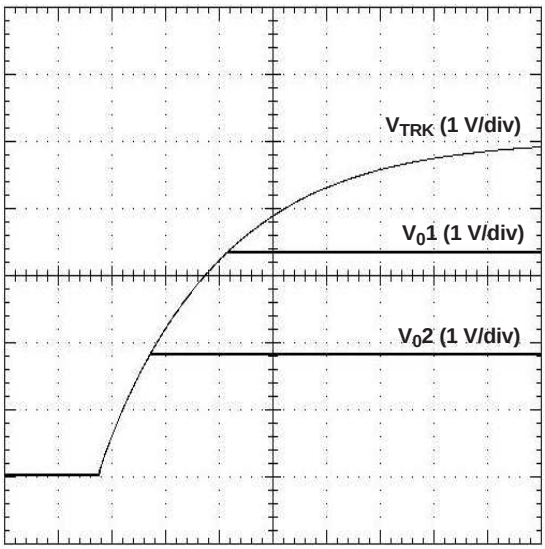

t – Time – 20 ms/div

Figure 11. Simultaneous Power Up With Auto-Track Control

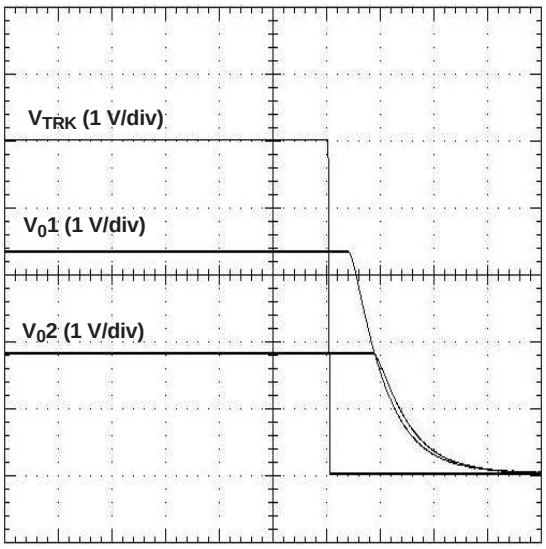

t – Time – 200 µs/div

Figure 12. Simultaneous Power Down With Auto-Track Control

Pre-Bias Startup Capability

Only selected products in the PTH family incorporate this capability. Consult Table 4 to identify which products are compliant.

A pre-bias startup condition occurs as a result of an external voltage being present at the output of a power module prior to its output becoming active. This often occurs in complex digital systems when current from another power source is backfed through a dual-supply logic component, such as an FPGA or ASIC. Another path might be via clamp diodes as part of a dual-supply power-up sequencing arrangement. A prebias can cause problems with power modules that incorporate synchronous rectifiers. This is because under most operating conditions, these types of modules can sink as well as source output current.

The PTH family of power modules incorporate synchronous rectifiers, but will not sink current during startup(1), or whenever the Inhibit pin is held low. However, to ensure satisfactory operation of this function, certain conditions must be maintained(2). Figure 13 shows an application demonstrating the pre-bias startup capability. The startup waveforms are shown in Figure 14. Note that the output current from the PTH03010W (I_O) shows negligible current until its output voltage rises above that backfed through the ASIC's intrinsic diodes.

Note: The pre-bias start-up feature is not compatible with Auto-Track. When the module is under Auto-Track control, it will sink current if the output voltage is below that of a back-feeding source. To ensure a pre-bias hold-off one of two approaches must be followed when input power is applied to the module. The Auto-Track function must either be disabled(3), or the module's output held off (for at least 50 ms) using the Inhibit pin. Either approach ensures that the Track pin voltage is above the set-point voltage at start up.

Notes:

1. Startup includes the short delay (approximately 10 ms) prior to the output voltage rising, followed by the rise of the output voltage under the module's internal soft-start control. Startup is complete when the output voltage has risen to either the set-point voltage or the voltage at the Track pin, whichever is lowest.
2. To ensure that the regulator does not sink current when power is first applied (even with a ground signal applied to the Inhibit control pin), the input voltage *must* always be greater than the output voltage *throughout* the power-up and power-down sequence.
3. The Auto-Track function can be disabled at power up by immediately applying a voltage to the module's Track pin that is greater than its set-point voltage. This can be easily accomplished by connecting the Track pin to V_I.

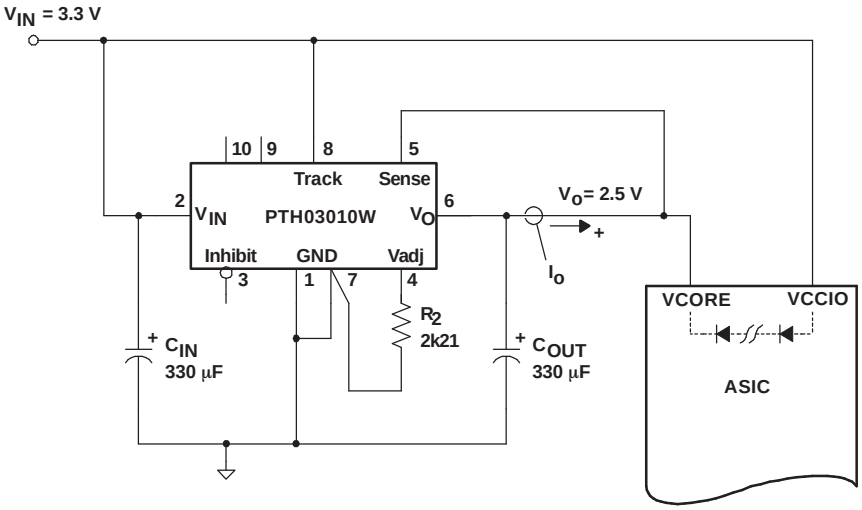

Figure 13. Application Circuit Demonstrating Pre-Bias Startup

Copyright © 2003–2009, Texas Instruments Incorporated

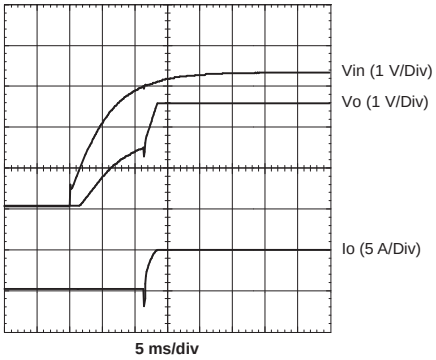

Figure 14. Pre-Bias Startup Waveforms

TAPE AND REEL SPECIFICATION

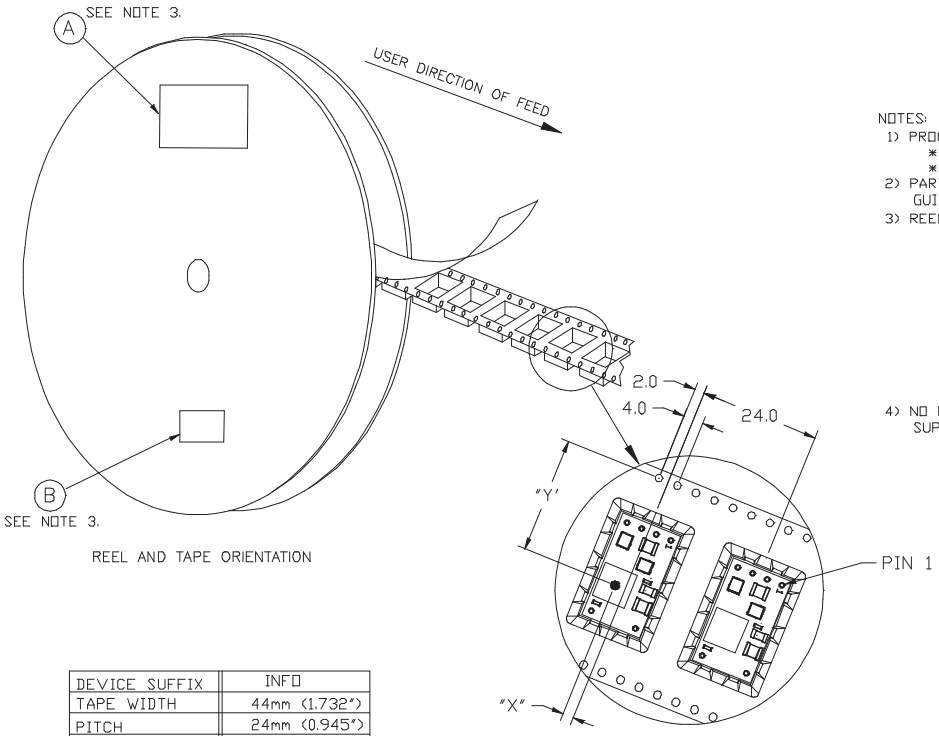

NOTES:
1) PROCESS IN ACCORDANCE WITH EIA-481-2
   * TAPE LEADER DIMENSION 15.30" MIN.
   * TAPE TRAILER DIMENSION 6.30" MIN.
2) PARTS SHOULD BE PACKAGED IN ACCORDANCE WITH ESD GUIDELINES IN EIA-541.
3) REEL LABEL: "A"- * TI PART NUMBER.
   * QUANTITY
   * DATE CODE
   * LOT NUMBER
   * MSL DATA
   * MADE IN
   * ASSY SITE ORIGIN
   * COUNTRY OF ORIGIN
   * SUPPLIER
   "B"- ANTI-STATIC CAUTION LABEL
4) NO REQUIREMENT FOR TAPE DIRECTION OF FEED FROM SUPPLIER REEL.

PTXXXX5X	"X"	"Y"
PTH03050/05050	−2.2mm	23.2mm
PTH04050A	2.1mm	18.7mm
PTH04050C	−1.9mm	18.7mm
PTH12050	−1.4mm	22.7mm

DEVICE SUFFIX	INFO
TAPE WIDTH	44mm (1.732")
PITCH	24mm (0.945")
REEL SIZE	15" DIA.
DEVICES/REEL	250

Copyright © 2003–2009, Texas Instruments Incorporated

TRAY SPECIFICATION

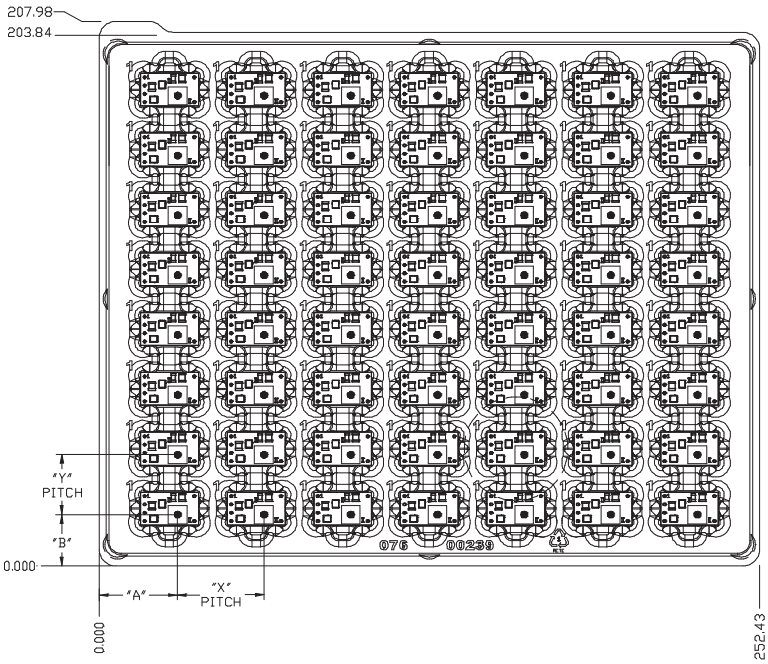

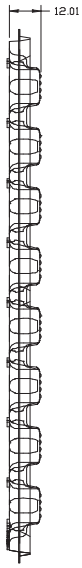

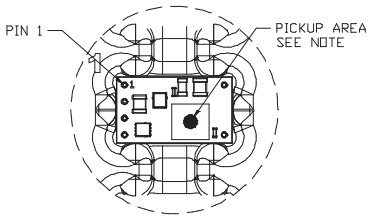

NOTE: THE INDUCTOR IS USED TO PICK AND PLACE THE MODULE. IT'S LOCATION MAY VARY FROM PACKAGE STYLE. SEE PRODUCT TABLE

PTXXXX5X	"A"	"B"	"X"	"Y"
PTH03050/05050	29.90	19.62	33.12	22.86
PTH12050	29.35	20.39		
PTN04050A	25.29	23.88		
PTN04050C	25.32	19.88		
ALL DIMENSIONS ARE IN MILLIMETER.				

DEVICES/TRAY	56

PACKAGING INFORMATION

Orderable part number	Status (1)	Material type (2)	Package | Pins	Package qty | Carrier	RoHS (3)	Lead finish/ Ball material (4)	MSL rating/ Peak reflow (5)	Op temp (°C)	Part marking (6)
PTH05050WAD	Active	Production	Through-Hole Module (EUU) | 6	56 | TIW TRAY	Exempt	SN	N/A for Pkg Type	-40 to 85	
PTH05050WAD.B	Active	Production	Through-Hole Module (EUU) | 6	56 | TIW TRAY	Exempt	SN	N/A for Pkg Type	-40 to 85	
PTH05050WAH	Active	Production	Through-Hole Module (EUU) | 6	56 | TIW TRAY	Exempt	SN	N/A for Pkg Type	-40 to 85	
PTH05050WAH.B	Active	Production	Through-Hole Module (EUU) | 6	56 | TIW TRAY	Exempt	SN	N/A for Pkg Type	-40 to 85	
PTH05050WAS	Active	Production	Surface Mount Module (EUV) | 6	56 | TIW TRAY	No	SNPB	Level-1-235C-UNLIM/ Level-3-260C-168HRS	-40 to 85	
PTH05050WAS.B	Active	Production	Surface Mount Module (EUV) | 6	56 | TIW TRAY	No	SNPB	Level-1-235C-UNLIM/ Level-3-260C-168HRS	-40 to 85	
PTH05050WAST	Active	Production	Surface Mount Module (EUV) | 6	250 | SMALL T&R	No	SNPB	Level-1-235C-UNLIM/ Level-3-260C-168HRS	-40 to 85	
PTH05050WAST.B	Active	Production	Surface Mount Module (EUV) | 6	250 | SMALL T&R	No	SNPB	Level-1-235C-UNLIM/ Level-3-260C-168HRS	-40 to 85	
PTH05050WAZ	Active	Production	Surface Mount Module (EUV) | 6	56 | TIW TRAY	Exempt	SNAGCU	Level-3-260C-168 HR	-40 to 85	
PTH05050WAZ.B	Active	Production	Surface Mount Module (EUV) | 6	56 | TIW TRAY	Exempt	SNAGCU	Level-3-260C-168 HR	-40 to 85	
PTH05050WAZT	Active	Production	Surface Mount Module (EUV) | 6	250 | SMALL T&R	Exempt	SNAGCU	Level-3-260C-168 HR	-40 to 85	
PTH05050WAZT.B	Active	Production	Surface Mount Module (EUV) | 6	250 | SMALL T&R	Exempt	SNAGCU	Level-3-260C-168 HR	-40 to 85	

(1) **Status:** For more details on status, see our product life cycle.

(2) **Material type:** When designated, preproduction parts are prototypes/experimental devices, and are not yet approved or released for full production. Testing and final process, including without limitation quality assurance, reliability performance testing, and/or process qualification, may not yet be complete, and this item is subject to further changes or possible discontinuation. If available for ordering, purchases will be subject to an additional waiver at checkout, and are intended for early internal evaluation purposes only. These items are sold without warranties of any kind.

(3) **RoHS values:** Yes, No, RoHS Exempt. See the TI RoHS Statement for additional information and value definition.

(4) **Lead finish/Ball material:** Parts may have multiple material finish options. Finish options are separated by a vertical ruled line. Lead finish/Ball material values may wrap to two lines if the finish value exceeds the maximum column width.

(5) **MSL rating/Peak reflow:** The moisture sensitivity level ratings and peak solder (reflow) temperatures. In the event that a part has multiple moisture sensitivity ratings, only the lowest level per JEDEC standards is shown. Refer to the shipping label for the actual reflow temperature that will be used to mount the part to the printed circuit board.

(6) **Part marking:** There may be an additional marking, which relates to the logo, the lot trace code information, or the environmental category of the part.

Multiple part markings will be inside parentheses. Only one part marking contained in parentheses and separated by a "~" will appear on a part. If a line is indented then it is a continuation of the previous line and the two combined represent the entire part marking for that device.

Important Information and Disclaimer: The information provided on this page represents TI's knowledge and belief as of the date that it is provided. TI bases its knowledge and belief on information provided by third parties, and makes no representation or warranty as to the accuracy of such information. Efforts are underway to better integrate information from third parties. TI has taken and continues to take reasonable steps to provide representative and accurate information but may not have conducted destructive testing or chemical analysis on incoming materials and chemicals. TI and TI suppliers consider certain information to be proprietary, and thus CAS numbers and other limited information may not be available for release.

In no event shall TI's liability arising out of such information exceed the total purchase price of the TI part(s) at issue in this document sold by TI to Customer on an annual basis.

EUV (R–PDSS–B6) DOUBLE SIDED MODULE

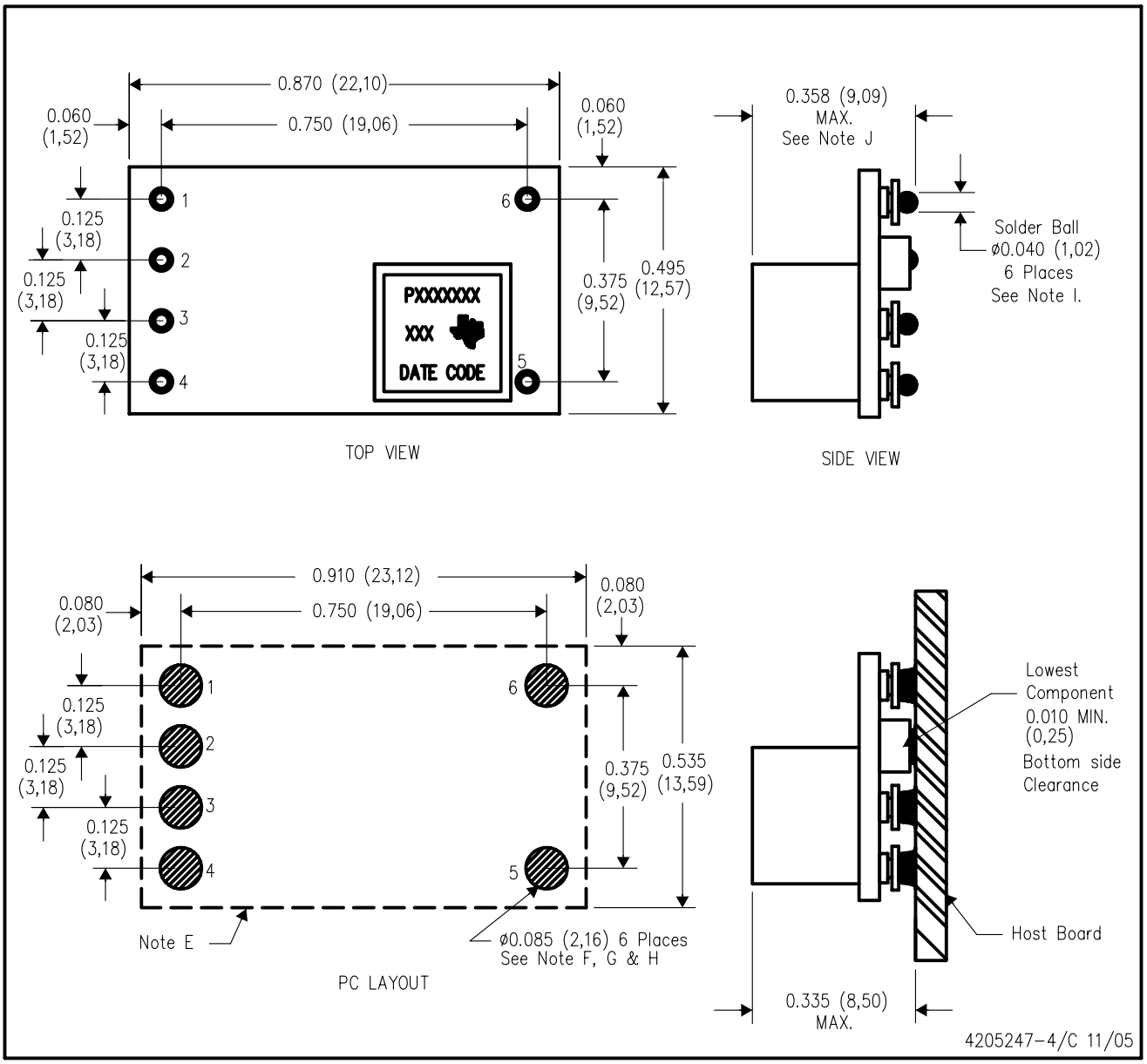

NOTES:
- A. All linear dimensions are in inches (mm).
- B. This drawing is subject to change without notice.
- C. 2 place decimals are ±0.030 (±0,76mm).
- D. 3 place decimals are ±0.010 (±0,25mm).
- E. Recommended keep out area for user components.
- F. Power pin connection should utilize two or more vias to the interior power plane of 0.025 (0,63) I.D. per input, ground and output pin (or the electrical equivalent).
- G. Paste screen opening: 0.080 (2,03) to 0.085 (2,16). Paste screen thickness: 0.006 (0,15).
- H. Pad type: Solder mask defined.
- I. All pins: Material – Copper Alloy
  Finish – Tin (100%) over Nickel plate
  Solder Ball – See product data sheet.
- J. Dimension prior to reflow solder.

EUU (R–PDSS–T6) DOUBLE SIDED MODULE

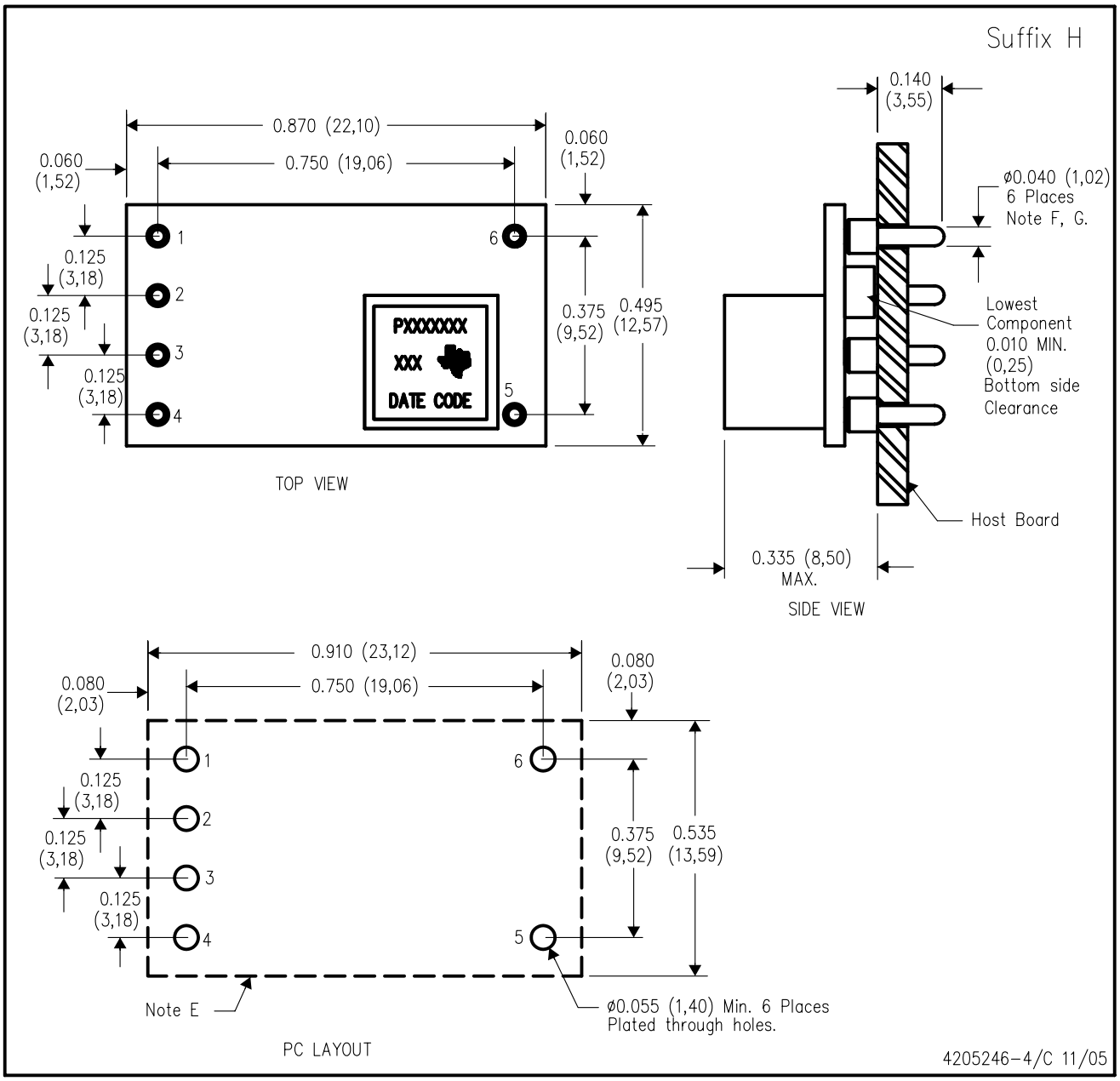

NOTES:
- A. All linear dimensions are in inches (mm).
- B. This drawing is subject to change without notice.
- C. 2 place decimals are ±0.030 (±0,76mm).
- D. 3 place decimals are ±0.010 (±0,25mm).
- E. Recommended keep out area for user components.
- F. Pins are 0.040" (1,02) diameter with 0.070" (1,78) diameter standoff shoulder.
- G. All pins: Material – Copper Alloy
  Finish – Tin (100%) over Nickel plate

IMPORTANT NOTICE AND DISCLAIMER

TI PROVIDES TECHNICAL AND RELIABILITY DATA (INCLUDING DATA SHEETS), DESIGN RESOURCES (INCLUDING REFERENCE DESIGNS), APPLICATION OR OTHER DESIGN ADVICE, WEB TOOLS, SAFETY INFORMATION, AND OTHER RESOURCES “AS IS” AND WITH ALL FAULTS, AND DISCLAIMS ALL WARRANTIES, EXPRESS AND IMPLIED, INCLUDING WITHOUT LIMITATION ANY IMPLIED WARRANTIES OF MERCHANTABILITY, FITNESS FOR A PARTICULAR PURPOSE OR NON-INFRINGEMENT OF THIRD PARTY INTELLECTUAL PROPERTY RIGHTS.

These resources are intended for skilled developers designing with TI products. You are solely responsible for (1) selecting the appropriate TI products for your application, (2) designing, validating and testing your application, and (3) ensuring your application meets applicable standards, and any other safety, security, regulatory or other requirements.

These resources are subject to change without notice. TI grants you permission to use these resources only for development of an application that uses the TI products described in the resource. Other reproduction and display of these resources is prohibited. No license is granted to any other TI intellectual property right or to any third party intellectual property right. TI disclaims responsibility for, and you will fully indemnify TI and its representatives against, any claims, damages, costs, losses, and liabilities arising out of your use of these resources.

TI’s products are provided subject to TI’s Terms of Sale or other applicable terms available either on ti.com or provided in conjunction with such TI products. TI’s provision of these resources does not expand or otherwise alter TI’s applicable warranties or warranty disclaimers for TI products.

TI objects to and rejects any additional or different terms you may have proposed.

Mailing Address: Texas Instruments, Post Office Box 655303, Dallas, Texas 75265
Copyright © 2025, Texas Instruments Incorporated