SN74LV393A Dual 4-Bit Binary Counters

1 Features

- V_{CC} operation of 2 V to 5.5 V
- Max t_{pd} of 10 ns at 5 V
- Typical V_{OLP} (Output Ground Bounce) <0.8 V at V_{CC} = 3.3 V, T_A = 25°C
- Typical V_{OHV} (Output V_{OH} Undershoot) > 2.3 V at V_{CC} = 3.3 V, T_A = 25°C
- I_{off} supports Partial-Power-Down-Mode operation
- Dual 4-bit binary counters with individual clocks
- Direct clear for each 4-bit counter
- Can significantly improve system densities by reducing counter package count by 50 percent
- Latch-Up performance exceeds 100 mA per JESD 78, Class II

2 Applications

- Synchronize invterted clock inputs
- Debounce a switch
- Invert a digital signal

3 Description

The 'LV393A devices contain eight flip-flops and additional gating to implement two individual 4-bit counters in a single package. These devices are designed for 2 V to 5.5 V V_{CC} operation.

Package Information

PART NUMBER	PACKAGE(1)	BODY SIZE (NOM)
SN74LV393A	D (SOIC, 14)	8.65 mm x 3.9 mm
	NS (SOP, 14)	10.3 mm x 5.3 mm
	DB (SSOP, 14)	6.2 mm x 5.3 mm
	PW (TSSOP, 14)	5 mm x 4.4 mm
	DGV (TVSOP, 14)	3.6 mm x 4.4 mm

(1) For all available packages, see the orderable addendum at the end of the data sheet.

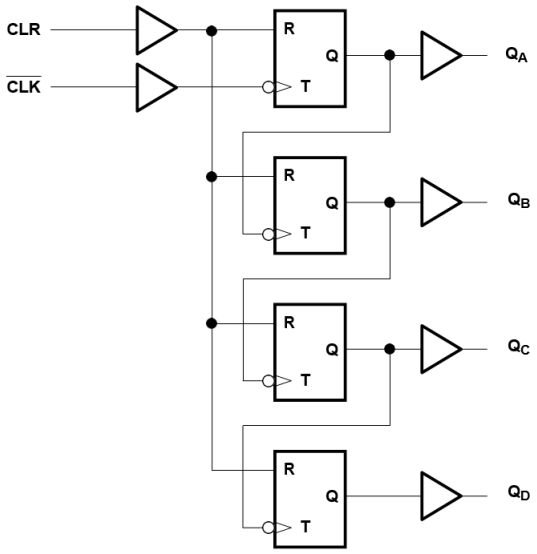

Figure 3-1. Logic Diagram, Each Counter (Positive Logic)

An IMPORTANT NOTICE at the end of this data sheet addresses availability, warranty, changes, use in safety-critical applications, intellectual property matters and other important disclaimers. UNLESS OTHERWISE NOTED, this document contains PRODUCTION DATA.

Table of Contents

1 Features....1
2 Applications....1
3 Description....1
4 Revision History....2
5 Pin Configuration and Functions....3
6 Specifications....4
6.1 Absolute Maximum Ratings....4
6.2 ESD Ratings....4
6.3 Recommended Operating Conditions....5
6.4 Thermal Information....5
6.5 Electrical Characteristics....6
6.6 Timing Requirements, V_{CC} = 2.5 V ± 0.2 V....6
6.7 Timing Requirements, V_{CC} = 3.3 V ± 0.3 V....6
6.8 Timing Requirements, V_{CC} = 5 V ± 0.5 V....6
6.9 Switching Characteristics, V_{CC} = 2.5 V ± 0.2 V....6
6.10 Switching Characteristics, V_{CC} = 3.3 V ± 0.3 V....7
6.11 Switching Characteristics, V_{CC} = 5 V ± 0.5 V....7
6.12 Timing Diagrams....8
6.13 Noise Characteristics....8
6.14 Operating Characteristics....8
7 Parameter Measurement Information....9
8 Detailed Description....10
8.1 Overview....10
8.2 Functional Block Diagram....10
8.3 Device Functional Modes....10
9 Application and Implementation....11
9.1 Power Supply Recommendations....11
9.2 Layout....11
10 Device and Documentation Support....12
10.1 Documentation Support....12
10.2 Receiving Notification of Documentation Updates....12
10.3 Support Resources....12
10.4 Trademarks....12
10.5 Electrostatic Discharge Caution....12
10.6 Glossary....12
11 Mechanical, Packaging, and Orderable Information....12

4 Revision History

NOTE: Page numbers for previous revisions may differ from page numbers in the current version.

Changes from Revision D (February 2001) to Revision E (March 2023)	Page
• Added *Applications*, *Package Information* table, *Pin Functions* table, *ESD Ratings* table, *Thermal Information* table, *Device Functional Modes*, *Application and Implementation* section, *Power Supply Recommendations* section, *Layout* section, *Device and Documentation Support* section, and *Mechanical, Packaging, and Orderable Information* section	1

Copyright © 2023 Texas Instruments Incorporated

5 Pin Configuration and Functions

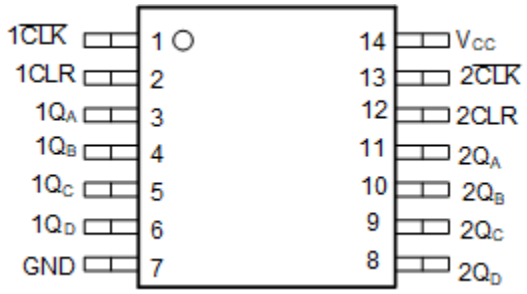

Figure 5-1. D, DB, DGV, NS, or PW Package (Top View)

Table 5-1. Pin Functions

PIN		TYPE[(1)]	DESCRIPTION
NAME	NO.		
$1\overline{CLK}$	1	I	Counter 1 Clock Input
1CLR	2	I	Counter 1 Clear Input
$1Q_A$	3	O	Counter 1 A Output
$1Q_B$	4	O	Counter 1 B Output
$1Q_C$	5	O	Counter 1 B Output
$1Q_D$	6	O	Counter 1 B Output
GND	7	G	Ground
$2Q_D$	8	O	Counter 2 D Output
$2Q_C$	9	O	Counter 2 C Output
$2Q_B$	10	O	Counter 2 B Output
$2Q_A$	11	O	Counter 2 A Output
2CLR	12	I	Counter 2 Clear Input
$2\overline{CLK}$	13	I	Counter 2 Clock Input
V_{CC}	14	P	V_{CC}

(1) I = Input, O = Output, I/O = Input or Output, G = Ground, P = Power.

Copyright © 2023 Texas Instruments Incorporated

6 Specifications

6.1 Absolute Maximum Ratings

Over operating free-air temperature range (unless otherwise noted)[1]

			MIN	MAX	UNIT
V_{CC}	Supply voltage		–0.5	7	V
V_I	Input voltage[1]		–0.5	7	V
V_O	Output voltage range applied in high or low state[1] [1]		–0.5	V_{CC} + 0.5	V
V_O	Output voltage range applied in power-off state [1]		–0.5	7	V
I_{IK}	Input clamp current	V_I < 0		–20	mA
I_{OK}	Output clamp current	V_O < 0		–50	mA
I_O	Continuous output current	V_O = 0 to V_{CC}		±25	mA
	Continuous current through V_{CC} or GND			±50	mA
T_{stg}	Storage temperature		–65	150	°C

(1) Stresses beyond those listed under “absolute maximum ratings” may cause permanent damage to the device. These are stress ratings only, and functional operation of the device at these or any other conditions beyond those indicated under “recommended operating conditions” is not implied. Exposure to absolute-maximum-rated conditions for extended periods may affect device reliability.
- The input and output negative-voltage ratings may be exceeded if the input and output current ratings are observed.
- This value is limited to 7 V maximum.

6.2 ESD Ratings

			VALUE	UNIT
$V_{(ESD)}$	Electrostatic discharge	Human-Body Model (A114-A)[1]	±2000	V
		Charged-Device Model (C101)[2]	±1000	
		Machine Model (A115-A)	±200	

(1) JEDEC document JEP155 states that 500-V HBM allows safe manufacturing with a standard ESD control process.
(2) JEDEC document JEP157 states that 250-V CDM allows safe manufacturing with a standard ESD control process.

Copyright © 2023 Texas Instruments Incorporated

6.3 Recommended Operating Conditions

over operating free-air temperature range (unless otherwise noted)[1]

			MIN	MAX	UNIT
V_{CC}	Supply voltage		2	5.5	V
V_{IH}	High-level input voltage	V_{CC} = 2 V	1.5		V
		V_{CC} = 2.3 V to 2.7 V	V_{CC} × 0.7		
		V_{CC} = 3 V to 3.6 V	V_{CC} × 0.7		
		V_{CC} = 4.5 V to 5.5 V	V_{CC} × 0.7		
V_{IL}	Low-level input voltage	V_{CC} = 2 V		0.5	V
		V_{CC} = 2.3 V to 2.7 V		V_{CC} × 0.3	
		V_{CC} = 3 V to 3.6 V		V_{CC} × 0.3	
		V_{CC} = 4.5 V to 5.5 V		V_{CC} × 0.3	
V_I	Input voltage		0	5.5	V
V_O	Output voltage	High or low state	0	V_{CC}	V
I_{OH}	High-level output current	V_{CC} = 2 V		–50	µA
		V_{CC} = 2.3 V to 2.7 V		–2	mA
		V_{CC} = 3 V to 3.6 V		–6	
		V_{CC} = 4.5 V to 5.5 V		–12	
I_{OL}	Low-level output current	V_{CC} = 2 V		50	µA
		V_{CC} = 2.3 V to 2.7 V		2	mA
		V_{CC} = 3 V to 3.6 V		6	
		V_{CC} = 4.5 V to 5.5 V		12	
Δt/Δv	Input transition rise or fall rate	V_{CC} = 2.3 V to 2.7 V		200	ns/V
		V_{CC} = 3 V to 3.6 V		100	
		V_{CC} = 4.5 V to 5.5 V		20	
T_A	Operating free-air temperature		–40	85	°C

(1) All unused inputs of the device must be held at V_{CC} or GND to ensure proper device operation. See *Implications of Slow or Floating CMOS Inputs.*

6.4 Thermal Information

THERMAL METRIC[1]		SN74LV393A					UNIT
		D (SOIC)	NS (SOP)	DB (SSOP)	PW (TSSOP)	DGV (TVSOP)	
		14 PINS	14 PINS	14 PINS	14 PINS	14 PINS	
$R_{\theta JA}$	Junction-to-ambient thermal resistance	86	96	127	76	113	°C/W

(1) For more information about traditional and new thermal metrics, see *Semiconductor and IC Package Thermal Metrics.*

6.5 Electrical Characteristics

over operating free-air temperature range (unless otherwise noted).

PARAMETER	TEST CONDITIONS	V_{CC}	MIN	TYP	MAX	UNIT
V_{OH}	I_{OH} = –50 µA	2 V to 5.5 V	V_{CC} – 0.1			V
	I_{OH} = –2 mA	2.3 V	2			
	I_{OH} = −6 mA	3 V	2.48			
	I_{OH} = −12 mA	4.5 V	3.8			
V_{OL}	I_{OL} = 50 µA	2 V to 5.5 V			0.1	V
	I_{OL} = 2 mA	2.3 V			0.4	
	I_{OL} = 6 mA	3 V			0.44	
	I_{OL} = 12 mA	4.5 V			0.55	
I_I	V_I = 5.5 V or GND	0 V to 5.5 V			±1	µA
I_{cc}	V_I = V_{CC} or GND, I_O =0	5.5 V			20	µA
I_{off}	V_I or V_O = 0 to 5.5 V	0 V			5	µA
C_i	V_I = V_{CC} or GND	3.3 V		1.8		pF

6.6 Timing Requirements, V_{CC} = 2.5 V ± 0.2 V

timing requirements over recommended operating free-air temperature range, V_{CC} = 2.5 V ± 0.2 V (unless otherwise noted)

			T_A = 25°C		SN74LV393A		UNIT
			MIN	MAX	MIN	MAX	
t_w	Pulse duration	$\overline{CLK}$ high or low	5		5		ns
		CLR high	5		5		
t_{su}	Setup time	CLR inactive before CLK↓	6		6		ns

6.7 Timing Requirements, V_{CC} = 3.3 V ± 0.3 V

timing requirements over recommended operating free-air temperature range, V_{CC} = 3.3 V ± 0.3 V (unless otherwise noted)

			T_A = 25°C		SN74LV393A		UNIT
			MIN	MAX	MIN	MAX	
t_w	Pulse duration	$\overline{CLK}$ high or low	5		5		ns
		CLR high	5		5		
t_{su}	Setup time	CLR inactive before CLK↓	5		5		ns

6.8 Timing Requirements, V_{CC} = 5 V ± 0.5 V

timing requirements over recommended operating free-air temperature range, V_{CC} = 5 V ± 0.5 V (unless otherwise noted)

			T_A = 25°C		SN74LV393A		UNIT
			MIN	MAX	MIN	MAX	
t_w	Pulse duration	$\overline{CLK}$ high or low	5		5		ns
		CLR high	5		5		
t_{su}	Setup time	CLR inactive before CLK↓	4		4		ns

6.9 Switching Characteristics, V_{CC} = 2.5 V ± 0.2 V

over operating free-air temperature range, V_{CC} = 2.5 V ± 0.2 V (unless otherwise noted)

PARAMETER	FROM (INPUT)	TO (OUTPUT)	TEST CONDITIONS	TA = 25°C			SN74LV393A		UNIT
				MIN	TYP	MAX	MIN	MAX	
f_{max}			C_L = 15 pF	50[1]	90[1]		40		MHz
			C_L = 50 pF	30	70		25		

Copyright © 2023 Texas Instruments Incorporated

6.9 Switching Characteristics, V_{CC} = 2.5 V ± 0.2 V (continued)

over operating free-air temperature range, V_{CC} = 2.5 V ± 0.2 V (unless otherwise noted)

PARAMETER	FROM (INPUT)	TO (OUTPUT)	TEST CONDITIONS	TA = 25°C			SN74LV393A		UNIT
				MIN	TYP	MAX	MIN	MAX	
t_{pd}	$\overline{CLK}$	Q_A	C_L = 15 pF		7.1[1]	17.7[1]	1	20.5	ns
		Q_B			8.5[1]	20.3[1]	1	23.5	
		Q_C			10[1]	122.5[1]	1	26	
		Q_D			11.1[1]	24.2[1]	1	28	
t_{PHL}	CLR	Q_n			6.7[1]	14.8[1]	1	17	
t_{pd}	$\overline{CLK}$	Q_A	C_L = 50 pF		9.3	21.3	1	24.5	ns
		Q_B			10.9	23.9	1	27.5	
		Q_C			12.3	26.1	1	30	
		Q_D			13.4	27.8	1	32	
t_{PHL}	CLR	Q_n			9.1	17.4	1	20	

1. On products compliant to MIL-PRF-38535, this parameter is not production tested.

6.10 Switching Characteristics, V_{CC} = 3.3 V ± 0.3 V

over operating free-air temperature range, V_{CC} = 3.3 V ± 0.3 V (unless otherwise noted)

PARAMETER	FROM (INPUT)	TO (OUTPUT)	TEST CONDITIONS	TA = 25°C			SN74LV393A		UNIT
				MIN	TYP	MAX	MIN	MAX	
f_{max}			C_L = 15 pF	75[1]	130[1]		65		MHz
			C_L = 50 pF	45	105		35		
t_{pd}	$\overline{CLK}$	Q_A	C_L = 15 pF		5.1[1]	13.2[1]	1	15.5	ns
		Q_B			6[1]	15.8[1]	1	18.5	
		Q_C			7[1]	18[1]	1	21	
		Q_D			7.7[1]	19.7[1]	1	23	
t_{PHL}	CLR	Q_n			5.1[1]	12.3[1]	1	14.5	
t_{pd}	$\overline{CLK}$	Q_A	C_L = 50 pF		6.7	16.7	1	19	ns
		Q_B			7.8	19.3	1	22	
		Q_C			8.7	21.5	1	24.5	
		Q_D			9.5	23.2	1	26.5	
t_{PHL}	CLR	Q_n			6.8	15.8	1	18	

1. On products compliant to MIL-PRF-38535, this parameter is not production tested.

6.11 Switching Characteristics, V_{CC} = 5 V ± 0.5 V

over operating free-air temperature range, V_{CC} = 5 V ± 0.5 V (unless otherwise noted)

PARAMETER	FROM (INPUT)	TO (OUTPUT)	TEST CONDITIONS	TA = 25°C			SN74LV393A		UNIT
				MIN	TYP	MAX	MIN	MAX	
f_{max}			C_L = 15 pF	125[1]	185[1]		105		MHz
			C_L = 50 pF	85	150		75		
t_{pd}	$\overline{CLK}$	Q_A	C_L = 15 pF		3.7[1]	8.5[1]	1	10	ns
		Q_B			4.3[1]	9.8[1]	1	11.5	
		Q_C			4.9[1]	11.2[1]	1	13	
		Q_D			5.3[1]	12.5[1]	1	14.5	
t_{PHL}	CLR	Q_n			3.9[1]	8.1[1]	1	9.5	

Copyright © 2023 Texas Instruments Incorporated

6.11 Switching Characteristics, V_{CC} = 5 V ± 0.5 V (continued)

over operating free-air temperature range, V_{CC} = 5 V ± 0.5 V (unless otherwise noted)

PARAMETER	FROM (INPUT)	TO (OUTPUT)	TEST CONDITIONS	TA = 25°C			SN74LV393A		UNIT
				MIN	TYP	MAX	MIN	MAX	
t_{pd}	$\overline{CLK}$	Q_A	C_L = 50 pF		4.9	10.5	1	12	ns
		Q_B			5.6	11.8	1	13.5	
		Q_C			6.2	13.2	1	15	
		Q_D			6.6	14.5	1	16.5	
t_{PHL}	CLR	Q_n			5.2	10.1	1	11.5	

1. On products compliant to MIL-PRF-38535, this parameter is not production tested.

6.12 Timing Diagrams

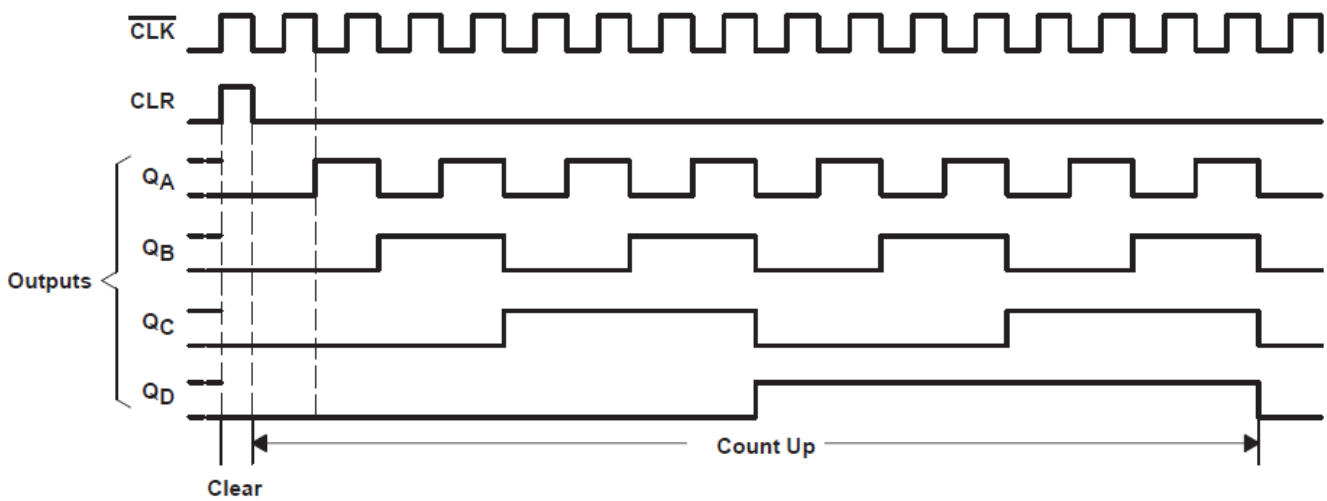

Figure 6-1. Timing Diagram

6.13 Noise Characteristics

V_{CC} = 3.3 V, C_L = 50 pF, T_A = 25°C

PARAMETER[(1)]		SN74LV393A			UNIT
		MIN	TYP	MAX	
$V_{OL(P)}$	Quiet output, maximum dynamic V_{OL}		0.3	0.8	V
$V_{OL(V)}$	Quiet output, minimum dynamic V_{OL}		− 0.2	–0.8	V
$V_{OH(V)}$	Quiet output, minimum dynamic V_{OH}		2.8		V
$V_{IH(D)}$	High-level dynamic input voltage	2.31			V
$V_{IL(D)}$	Low-level dynamic input voltage			0.99	V

(1) Characteristics for surface-mount packages only.

6.14 Operating Characteristics

T_A = 25°C

PARAMETER		TEST CONDITIONS	V_{CC}	TYP	UNIT
C_{pd}	Power dissipation capacitance (outputs enabled)	C_L = 50 pF, f = 10 MHz	3.3 V	15.2	pF
			5 V	17.3	

Copyright © 2023 Texas Instruments Incorporated

7 Parameter Measurement Information

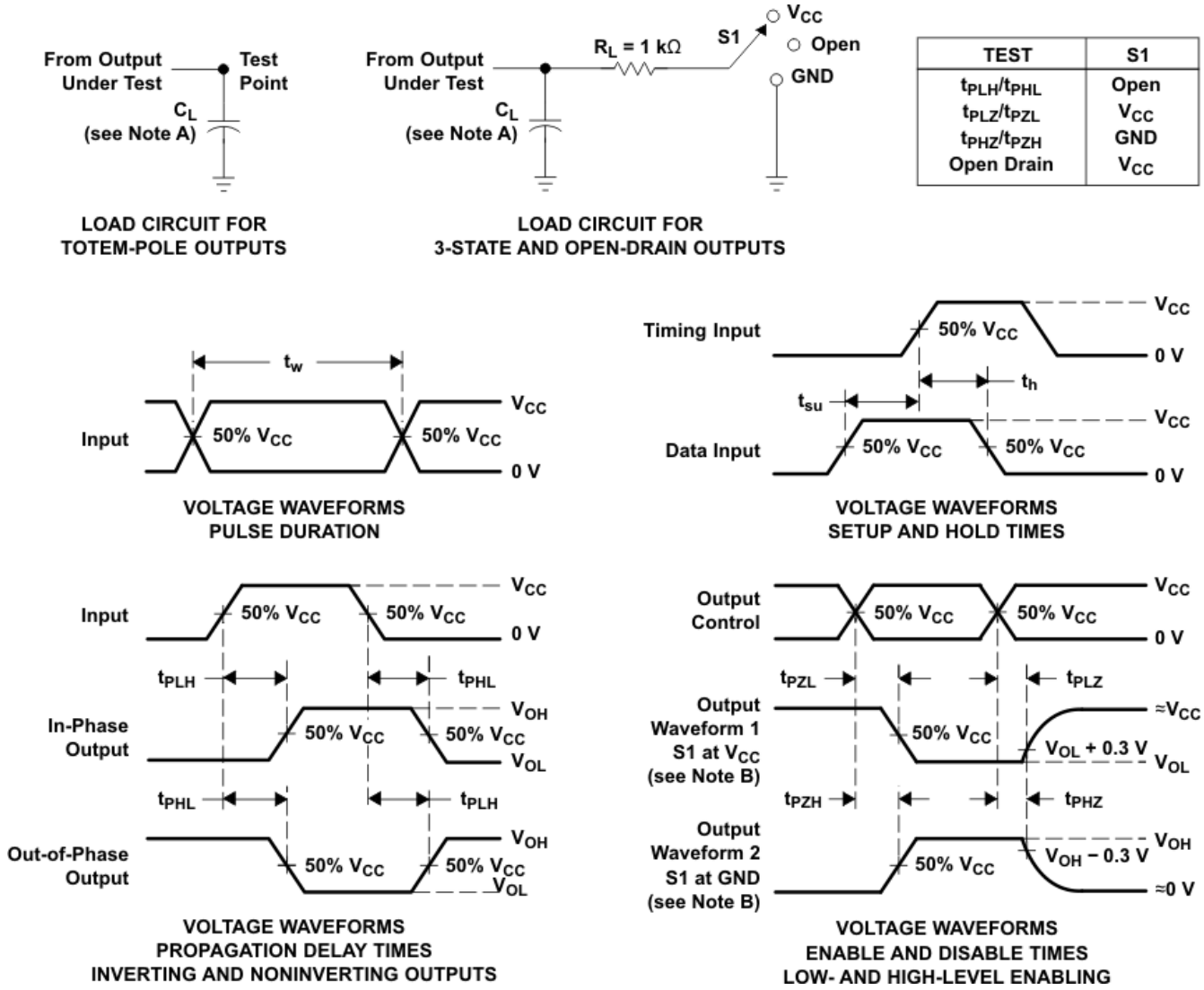

TEST	S1
t_{PLH}/t_{PHL}	Open
t_{PLZ}/t_{PZL}	V_{CC}
t_{PHZ}/t_{PZH}	GND
Open Drain	V_{CC}

A. C_L includes probe and jig capacitance.
B. Waveform 1 is for an output with internal conditions such that the output is low, except when disabled by the output control. Waveform 2 is for an output with internal conditions such that the output is high, except when disabled by the output control.
C. All input pulses are supplied by generators having the following characteristics: PRR ≤ 1 MHz, Z_O = 50 Ω, t_r ≤ 3 ns, and t_f ≤ 3 ns.
D. The outputs are measured one at a time, with one input transition per measurement.
E. t_{PLZ} and t_{PHZ} are the same as t_{dis}.
F. t_{PZL} and t_{PZH} are the same as t_{en}.
G. t_{PHL} and t_{PLH} are the same as t_{pd}.
H. All parameters and waveforms are not applicable to all devices.

Figure 7-1. Load Circuit and Voltage Waveforms

8 Detailed Description

8.1 Overview

These devices comprise two independent 4-bit binary counters, each having a clear (CLR) and a clock ($\overline{CLK}$) input. These devices change state on the negative-going transition of the $\overline{CLK}$ pulse. N-bit binary counters can be implemented with each package, providing the capability of divide by 256. The ’LV393A devices have parallel outputs from each counter stage so that any submultiple of the input count frequency is available for system timing signals.

These devices are fully specified for partial-power-down applications using I_{off}. The I_{off} circuitry disables the outputs, preventing damaging current backflow through the devices when they are powered down.

8.2 Functional Block Diagram

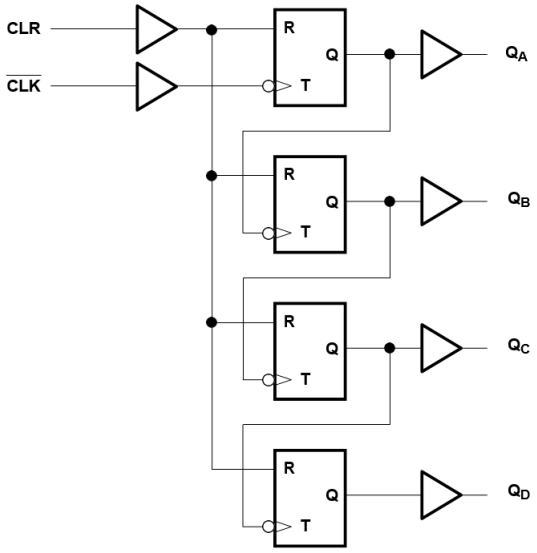

Figure 8-1. Logic Diagram, Each Counter (Positive Logic)

8.3 Device Functional Modes

Table 8-1. Function Table

INPUTS		FUNCTION
$\overline{CLK}$	CLR	
↑	L	No change
↓	L	Advance to next stage
X	H	All outputs L

Copyright © 2023 Texas Instruments Incorporated

9 Application and Implementation

Note

Information in the following applications sections is not part of the TI component specification, and TI does not warrant its accuracy or completeness. TI's customers are responsible for determining suitability of components for their purposes, as well as validating and testing their design implementation to confirm system functionality.

9.1 Power Supply Recommendations

The power supply can be any voltage between the minimum and maximum supply voltage rating located in the *Absolute Maximum Ratings* section. Each V_{CC} terminal must have a good bypass capacitor to prevent power disturbance. For devices with a single supply, TI recommends a 0.1-µF capacitor; if there are multiple V_{CC} terminals, then TI recommends a 0.01-µF or 0.022-µF capacitor for each power terminal. Multiple bypass capacitors can be paralleled to reject different frequencies of noise. Frequencies of 0.1 µF and 1 µF are commonly used in parallel. The bypass capacitor must be installed as close as possible to the power terminal for best results.

9.2 Layout

9.2.1 Layout Guidelines

When using multiple bit logic devices, inputs should not float. In many cases, functions or parts of functions of digital logic devices are unused. Some examples are when only two inputs of a triple-input AND gate are used, or when only 3 of the 4-buffer gates are used. Such unused input pins must not be left unconnected because the undefined voltages at the outside connections result in undefined operational states. All unused inputs of digital logic devices must be connected to a logic high or logic low voltage, as defined by the input voltage specifications, to prevent them from floating. The logic level that must be applied to any particular unused input depends on the function of the device. Generally, the inputs are tied to GND or V_{CC}, whichever makes more sense for the logic function or is more convenient.

9.2.1.1 Layout Example

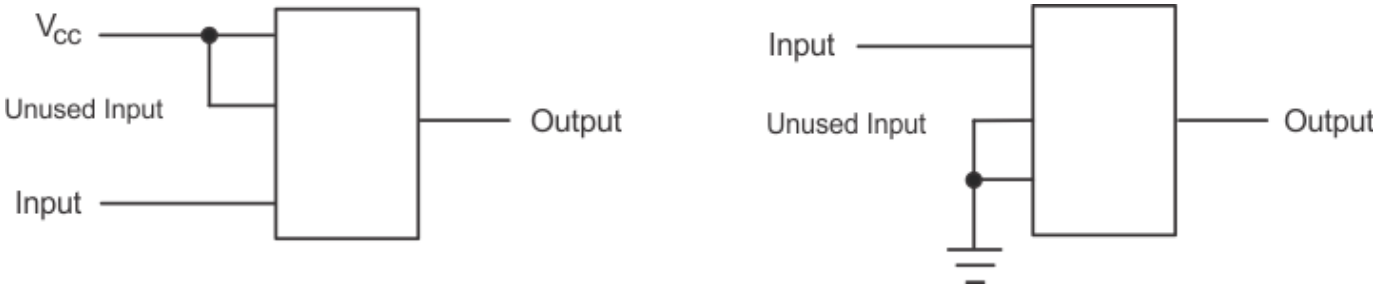

Figure 9-1. Layout Diagram

10 Device and Documentation Support

TI offers an extensive line of development tools. Tools and software to evaluate the performance of the device, generate code, and develop solutions are listed below.

10.1 Documentation Support

10.1.1 Related Documentation

The table below lists quick access links. Categories include technical documents, support and community resources, tools and software, and quick access to sample or buy.

Table 10-1. Related Links

PARTS	PRODUCT FOLDER	SAMPLE & BUY	TECHNICAL DOCUMENTS	TOOLS & SOFTWARE	SUPPORT & COMMUNITY
SN74LV393A	Click here	Click here	Click here	Click here	Click here

10.2 Receiving Notification of Documentation Updates

To receive notification of documentation updates, navigate to the device product folder on ti.com. Click on *Subscribe to updates* to register and receive a weekly digest of any product information that has changed. For change details, review the revision history included in any revised document.

10.3 Support Resources

TI E2E™ support forums are an engineer's go-to source for fast, verified answers and design help — straight from the experts. Search existing answers or ask your own question to get the quick design help you need.

Linked content is provided "AS IS" by the respective contributors. They do not constitute TI specifications and do not necessarily reflect TI's views; see TI's Terms of Use.

10.4 Trademarks

TI E2E™ is a trademark of Texas Instruments.
All trademarks are the property of their respective owners.

10.5 Electrostatic Discharge Caution

This integrated circuit can be damaged by ESD. Texas Instruments recommends that all integrated circuits be handled with appropriate precautions. Failure to observe proper handling and installation procedures can cause damage.

ESD damage can range from subtle performance degradation to complete device failure. Precision integrated circuits may be more susceptible to damage because very small parametric changes could cause the device not to meet its published specifications.

10.6 Glossary

TI Glossary This glossary lists and explains terms, acronyms, and definitions.

11 Mechanical, Packaging, and Orderable Information

The following pages include mechanical, packaging, and orderable information. This information is the most current data available for the designated devices. This data is subject to change without notice and revision of this document. For browser-based versions of this data sheet, refer to the left-hand navigation.

Copyright © 2023 Texas Instruments Incorporated

PACKAGING INFORMATION

Orderable part number	Status (1)	Material type (2)	Package | Pins	Package qty | Carrier	RoHS (3)	Lead finish/ Ball material (4)	MSL rating/ Peak reflow (5)	Op temp (°C)	Part marking (6)
SN74LV393AD	Obsolete	Production	SOIC (D) | 14	-	-	Call TI	Call TI	-40 to 85	LV393A
SN74LV393ADBR	Active	Production	SSOP (DB) | 14	2000 | LARGE T&R	Yes	NIPDAU	Level-1-260C-UNLIM	-40 to 85	LV393A
SN74LV393ADBR.A	Active	Production	SSOP (DB) | 14	2000 | LARGE T&R	Yes	NIPDAU	Level-1-260C-UNLIM	-40 to 85	LV393A
SN74LV393ADGVR	Active	Production	TVSOP (DGV) | 14	2000 | LARGE T&R	Yes	NIPDAU	Level-1-260C-UNLIM	-40 to 85	LV393A
SN74LV393ADGVR.A	Active	Production	TVSOP (DGV) | 14	2000 | LARGE T&R	Yes	NIPDAU	Level-1-260C-UNLIM	-40 to 85	LV393A
SN74LV393ADR	Active	Production	SOIC (D) | 14	2500 | LARGE T&R	Yes	NIPDAU | NIPDAU	Level-1-260C-UNLIM	-40 to 85	LV393A
SN74LV393ADR.A	Active	Production	SOIC (D) | 14	2500 | LARGE T&R	Yes	NIPDAU	Level-1-260C-UNLIM	-40 to 85	LV393A
SN74LV393ANSR	Active	Production	SOP (NS) | 14	2000 | LARGE T&R	Yes	NIPDAU	Level-1-260C-UNLIM	-40 to 85	74LV393A
SN74LV393ANSR.A	Active	Production	SOP (NS) | 14	2000 | LARGE T&R	Yes	NIPDAU	Level-1-260C-UNLIM	-40 to 85	74LV393A
SN74LV393APW	Obsolete	Production	TSSOP (PW) | 14	-	-	Call TI	Call TI	-40 to 85	LV393A
SN74LV393APWR	Active	Production	TSSOP (PW) | 14	2000 | LARGE T&R	Yes	NIPDAU | SN	Level-1-260C-UNLIM	-40 to 85	LV393A
SN74LV393APWR.A	Active	Production	TSSOP (PW) | 14	2000 | LARGE T&R	Yes	NIPDAU	Level-1-260C-UNLIM	-40 to 85	LV393A
SN74LV393APWRG4	Active	Production	TSSOP (PW) | 14	2000 | LARGE T&R	Yes	NIPDAU	Level-1-260C-UNLIM	-40 to 85	LV393A
SN74LV393APWRG4	Active	Production	TSSOP (PW) | 14	2000 | LARGE T&R	No	NIPDAU	Level-1-260C-UNLIM	-40 to 85	LV393A
SN74LV393APWRG4.A	Active	Production	TSSOP (PW) | 14	2000 | LARGE T&R	Yes	NIPDAU	Level-1-260C-UNLIM	-40 to 85	LV393A
SN74LV393APWRG4.A	Active	Production	TSSOP (PW) | 14	2000 | LARGE T&R	No	NIPDAU	Level-1-260C-UNLIM	-40 to 85	LV393A

(1) **Status:** For more details on status, see our product life cycle.

(2) **Material type:** When designated, preproduction parts are prototypes/experimental devices, and are not yet approved or released for full production. Testing and final process, including without limitation quality assurance, reliability performance testing, and/or process qualification, may not yet be complete, and this item is subject to further changes or possible discontinuation. If available for ordering, purchases will be subject to an additional waiver at checkout, and are intended for early internal evaluation purposes only. These items are sold without warranties of any kind.

(3) **RoHS values:** Yes, No, RoHS Exempt. See the TI RoHS Statement for additional information and value definition.

(4) **Lead finish/Ball material:** Parts may have multiple material finish options. Finish options are separated by a vertical ruled line. Lead finish/Ball material values may wrap to two lines if the finish value exceeds the maximum column width.

(5) **MSL rating/Peak reflow:** The moisture sensitivity level ratings and peak solder (reflow) temperatures. In the event that a part has multiple moisture sensitivity ratings, only the lowest level per JEDEC standards is shown. Refer to the shipping label for the actual reflow temperature that will be used to mount the part to the printed circuit board.

(6) **Part marking:** There may be an additional marking, which relates to the logo, the lot trace code information, or the environmental category of the part.

Multiple part markings will be inside parentheses. Only one part marking contained in parentheses and separated by a "~" will appear on a part. If a line is indented then it is a continuation of the previous line and the two combined represent the entire part marking for that device.

Important Information and Disclaimer: The information provided on this page represents TI's knowledge and belief as of the date that it is provided. TI bases its knowledge and belief on information provided by third parties, and makes no representation or warranty as to the accuracy of such information. Efforts are underway to better integrate information from third parties. TI has taken and continues to take reasonable steps to provide representative and accurate information but may not have conducted destructive testing or chemical analysis on incoming materials and chemicals. TI and TI suppliers consider certain information to be proprietary, and thus CAS numbers and other limited information may not be available for release.

In no event shall TI's liability arising out of such information exceed the total purchase price of the TI part(s) at issue in this document sold by TI to Customer on an annual basis.

OTHER QUALIFIED VERSIONS OF SN74LV393A :

- Automotive : SN74LV393A-Q1
- Enhanced Product : SN74LV393A-EP

NOTE: Qualified Version Definitions:

- Automotive - Q100 devices qualified for high-reliability automotive applications targeting zero defects
- Enhanced Product - Supports Defense, Aerospace and Medical Applications

TAPE AND REEL INFORMATION

REEL DIMENSIONS

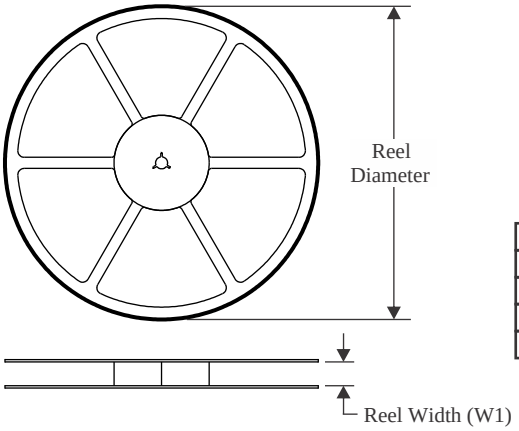

TAPE DIMENSIONS

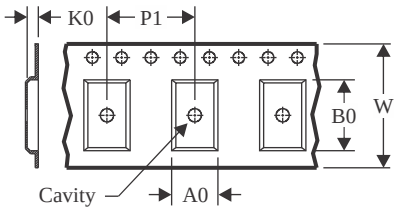

A0	Dimension designed to accommodate the component width
B0	Dimension designed to accommodate the component length
K0	Dimension designed to accommodate the component thickness
W	Overall width of the carrier tape
P1	Pitch between successive cavity centers

QUADRANT ASSIGNMENTS FOR PIN 1 ORIENTATION IN TAPE

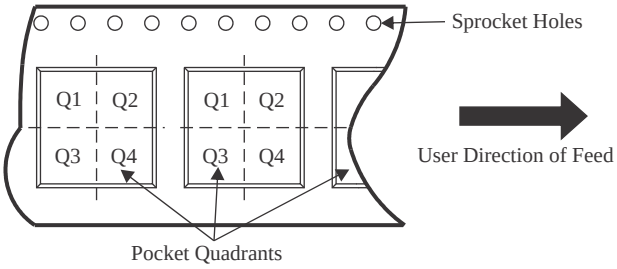

*All dimensions are nominal

Device	Package Type	Package Drawing	Pins	SPQ	Reel Diameter (mm)	Reel Width W1 (mm)	A0 (mm)	B0 (mm)	K0 (mm)	P1 (mm)	W (mm)	Pin1 Quadrant
SN74LV393ADBR	SSOP	DB	14	2000	330.0	16.4	8.35	6.6	2.4	12.0	16.0	Q1
SN74LV393ADGVR	TVSOP	DGV	14	2000	330.0	12.4	6.8	4.0	1.6	8.0	12.0	Q1
SN74LV393ADR	SOIC	D	14	2500	330.0	16.4	6.5	9.0	2.1	8.0	16.0	Q1
SN74LV393ANSR	SOP	NS	14	2000	330.0	16.4	8.2	10.5	2.5	12.0	16.0	Q1
SN74LV393APWR	TSSOP	PW	14	2000	330.0	12.4	6.9	5.6	1.6	8.0	12.0	Q1
SN74LV393APWRG4	TSSOP	PW	14	2000	330.0	12.4	6.9	5.6	1.6	8.0	12.0	Q1

TAPE AND REEL BOX DIMENSIONS

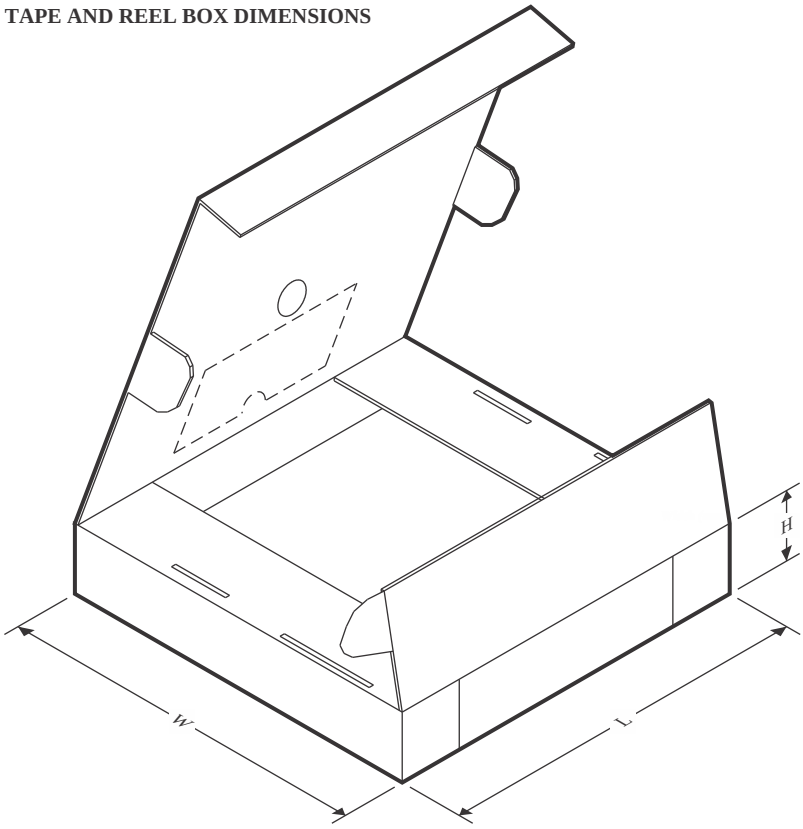

*All dimensions are nominal

Device	Package Type	Package Drawing	Pins	SPQ	Length (mm)	Width (mm)	Height (mm)
SN74LV393ADBR	SSOP	DB	14	2000	356.0	356.0	35.0
SN74LV393ADGVR	TVSOP	DGV	14	2000	356.0	356.0	35.0
SN74LV393ADR	SOIC	D	14	2500	356.0	356.0	35.0
SN74LV393ANSR	SOP	NS	14	2000	356.0	356.0	35.0
SN74LV393APWR	TSSOP	PW	14	2000	356.0	356.0	35.0
SN74LV393APWRG4	TSSOP	PW	14	2000	356.0	356.0	35.0

DGV (R-PDSO-G)** **PLASTIC SMALL-OUTLINE**

24 PINS SHOWN

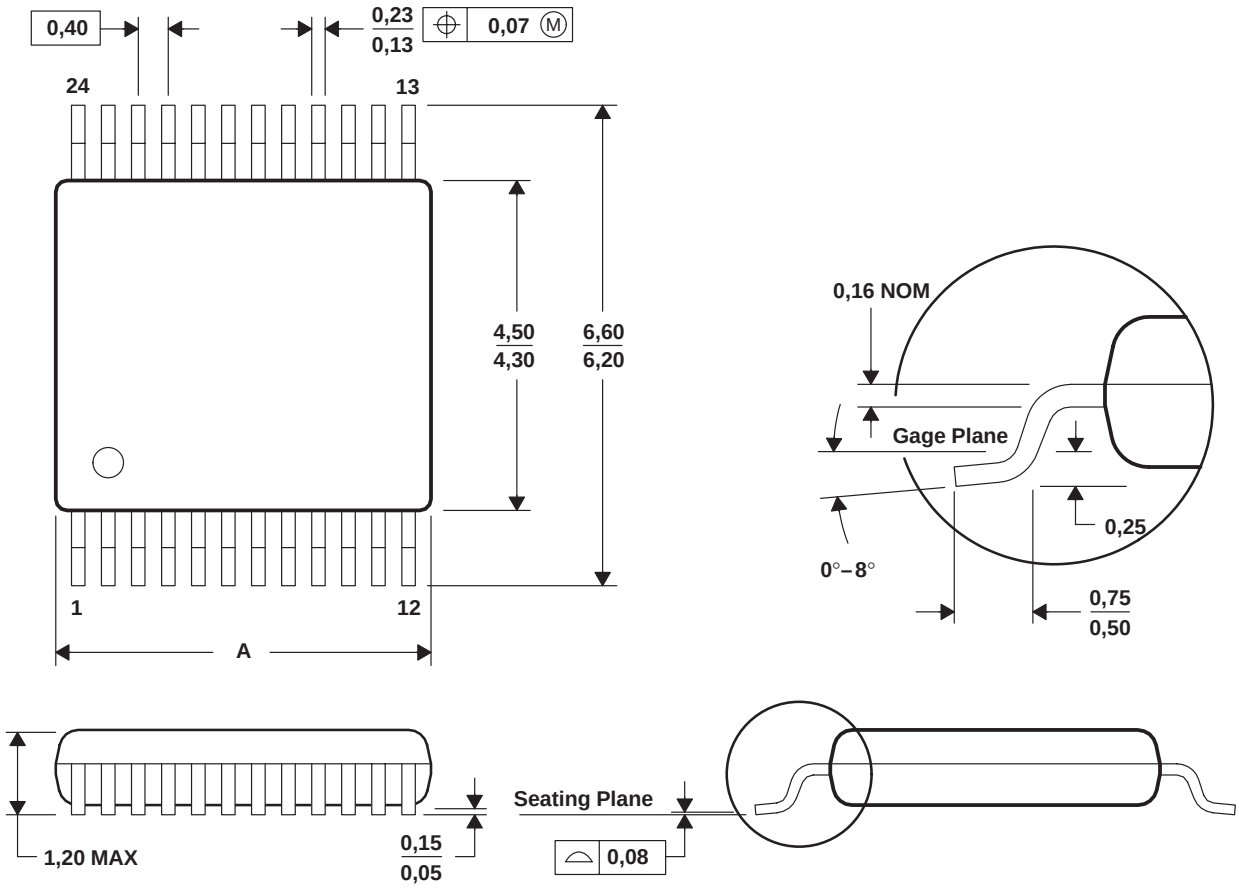

DIM \ PINS **	14	16	20	24	38	48	56
A MAX	3,70	3,70	5,10	5,10	7,90	9,80	11,40
A MIN	3,50	3,50	4,90	4,90	7,70	9,60	11,20

4073251/E 08/00

NOTES: A. All linear dimensions are in millimeters.
B. This drawing is subject to change without notice.
C. Body dimensions do not include mold flash or protrusion, not to exceed 0,15 per side.
D. Falls within JEDEC: 24/48 Pins – MO-153
14/16/20/56 Pins – MO-194

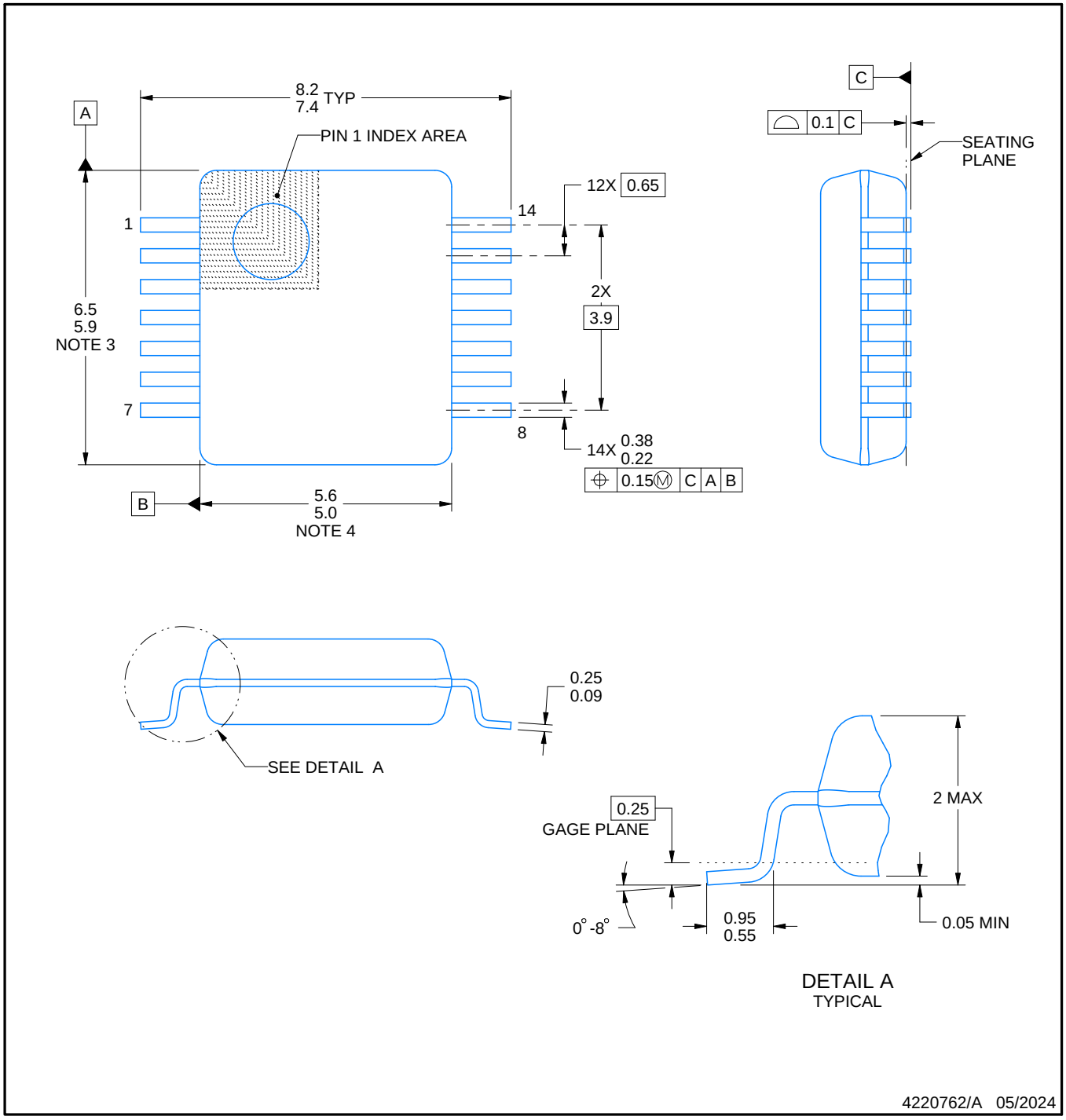

NOTES:

1. All linear dimensions are in millimeters. Any dimensions in parenthesis are for reference only. Dimensioning and tolerancing per ASME Y14.5M.
2. This drawing is subject to change without notice.
3. This dimension does not include mold flash, protrusions, or gate burrs. Mold flash, protrusions, or gate burrs shall not exceed 0.15 mm per side.
4. Reference JEDEC registration MO-150.

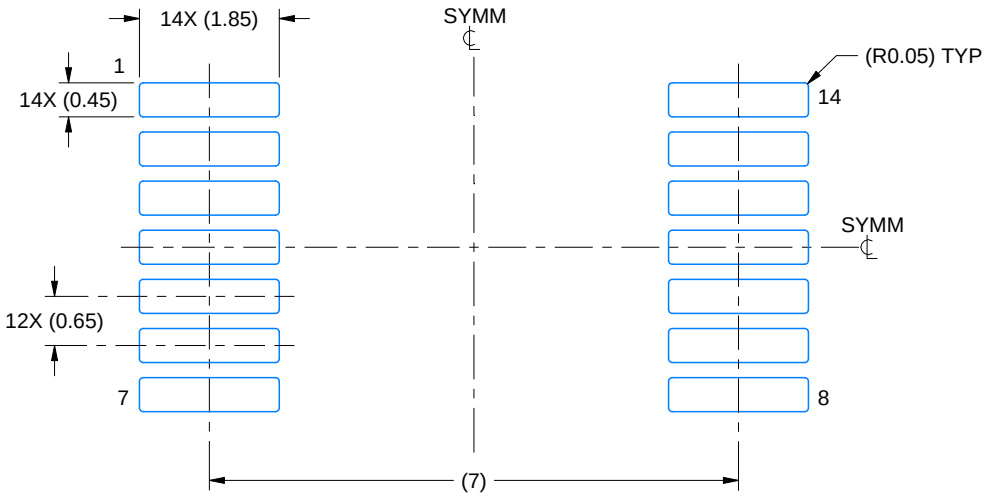

LAND PATTERN EXAMPLE
EXPOSED METAL SHOWN
SCALE: 10X

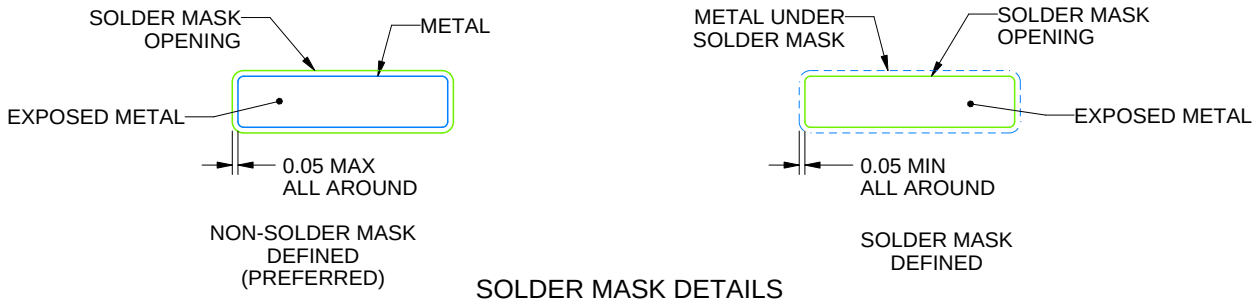

SOLDER MASK DETAILS

4220762/A 05/2024

NOTES: (continued)

5. Publication IPC-7351 may have alternate designs.
6. Solder mask tolerances between and around signal pads can vary based on board fabrication site.

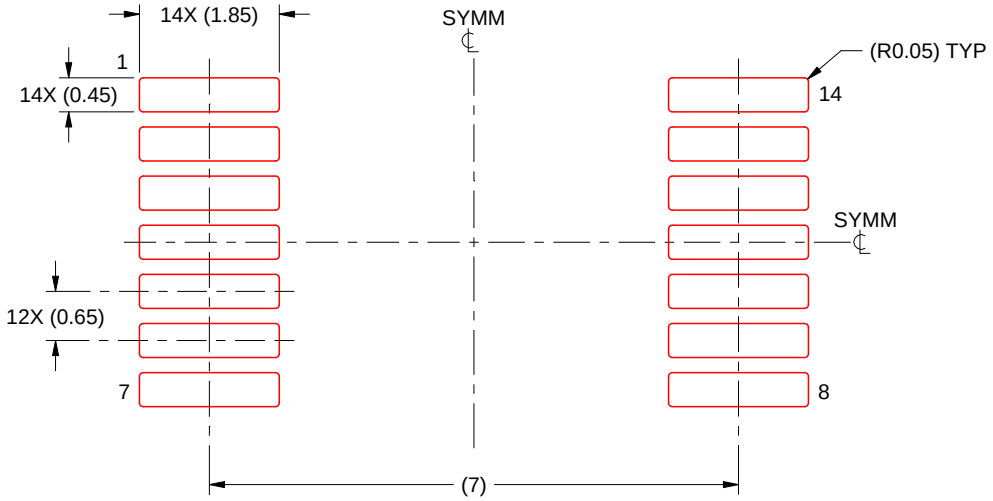

SOLDER PASTE EXAMPLE
BASED ON 0.125 mm THICK STENCIL
SCALE: 10X

4220762/A 05/2024

NOTES: (continued)

7. Laser cutting apertures with trapezoidal walls and rounded corners may offer better paste release. IPC-7525 may have alternate design recommendations.
8. Board assembly site may have different recommendations for stencil design.

PW0014A

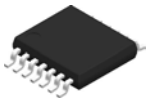

PACKAGE OUTLINE

TSSOP - 1.2 mm max height

SMALL OUTLINE PACKAGE

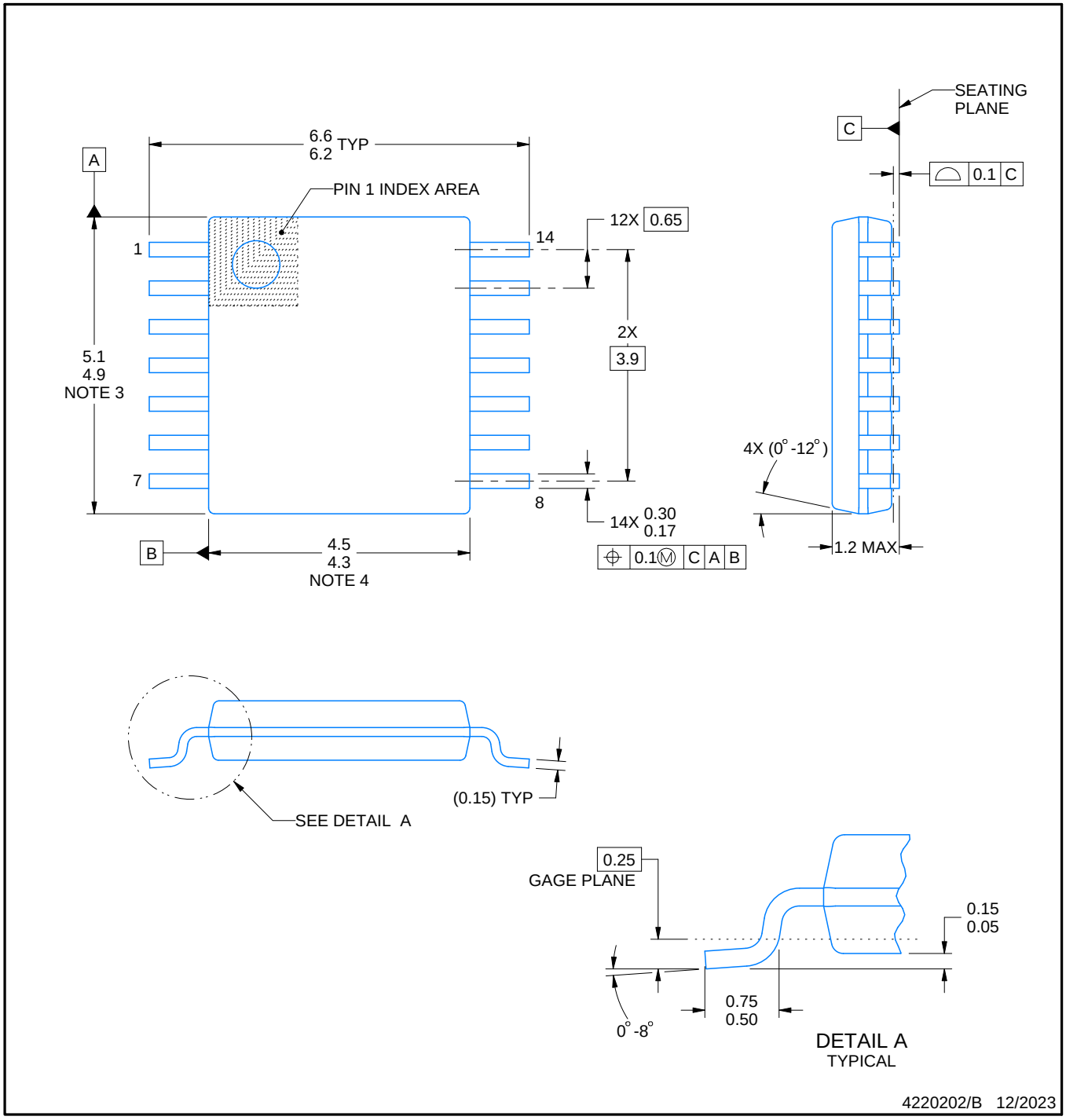

NOTES:

1. All linear dimensions are in millimeters. Any dimensions in parenthesis are for reference only. Dimensioning and tolerancing per ASME Y14.5M.
2. This drawing is subject to change without notice.
3. This dimension does not include mold flash, protrusions, or gate burrs. Mold flash, protrusions, or gate burrs shall not exceed 0.15 mm per side.
4. This dimension does not include interlead flash. Interlead flash shall not exceed 0.25 mm per side.
5. Reference JEDEC registration MO-153.

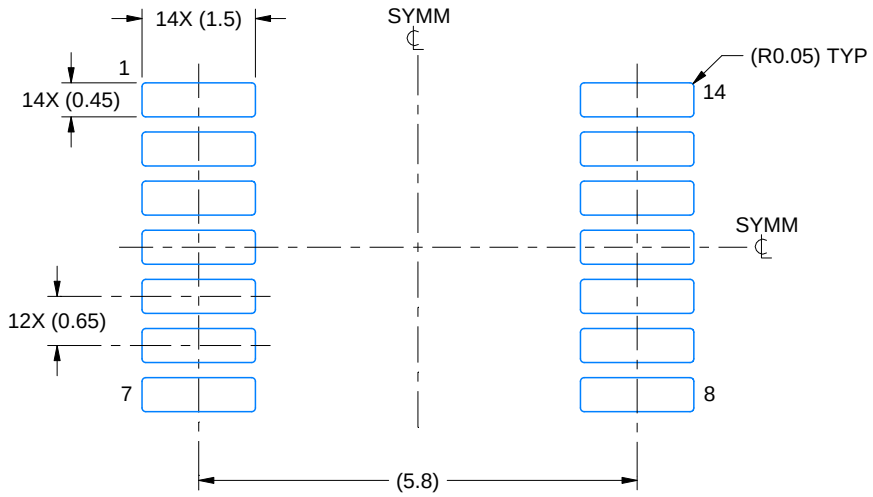

LAND PATTERN EXAMPLE
EXPOSED METAL SHOWN
SCALE: 10X

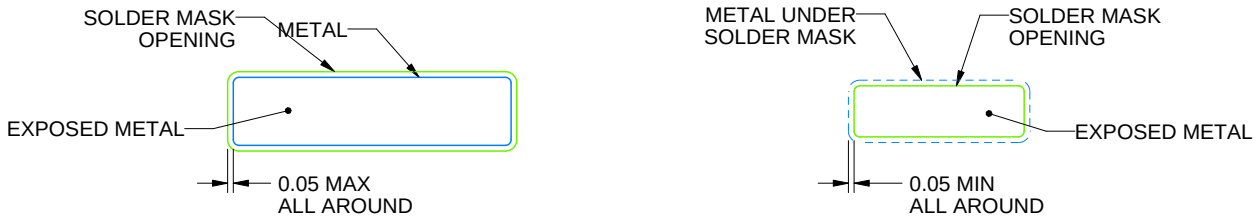

NON-SOLDER MASK DEFINED (PREFERRED)

SOLDER MASK DEFINED

SOLDER MASK DETAILS

4220202/B 12/2023

NOTES: (continued)

6. Publication IPC-7351 may have alternate designs.
7. Solder mask tolerances between and around signal pads can vary based on board fabrication site.

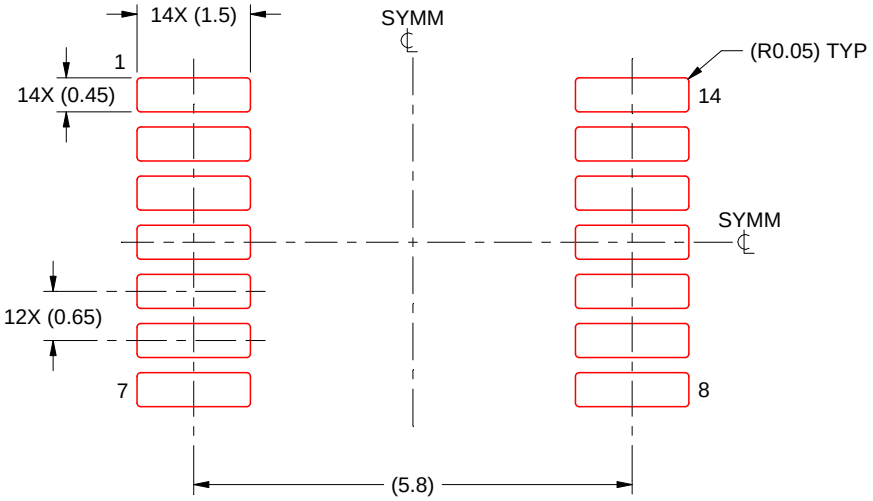

SOLDER PASTE EXAMPLE
BASED ON 0.125 mm THICK STENCIL
SCALE: 10X

4220202/B 12/2023

NOTES: (continued)

8. Laser cutting apertures with trapezoidal walls and rounded corners may offer better paste release. IPC-7525 may have alternate design recommendations.
9. Board assembly site may have different recommendations for stencil design.

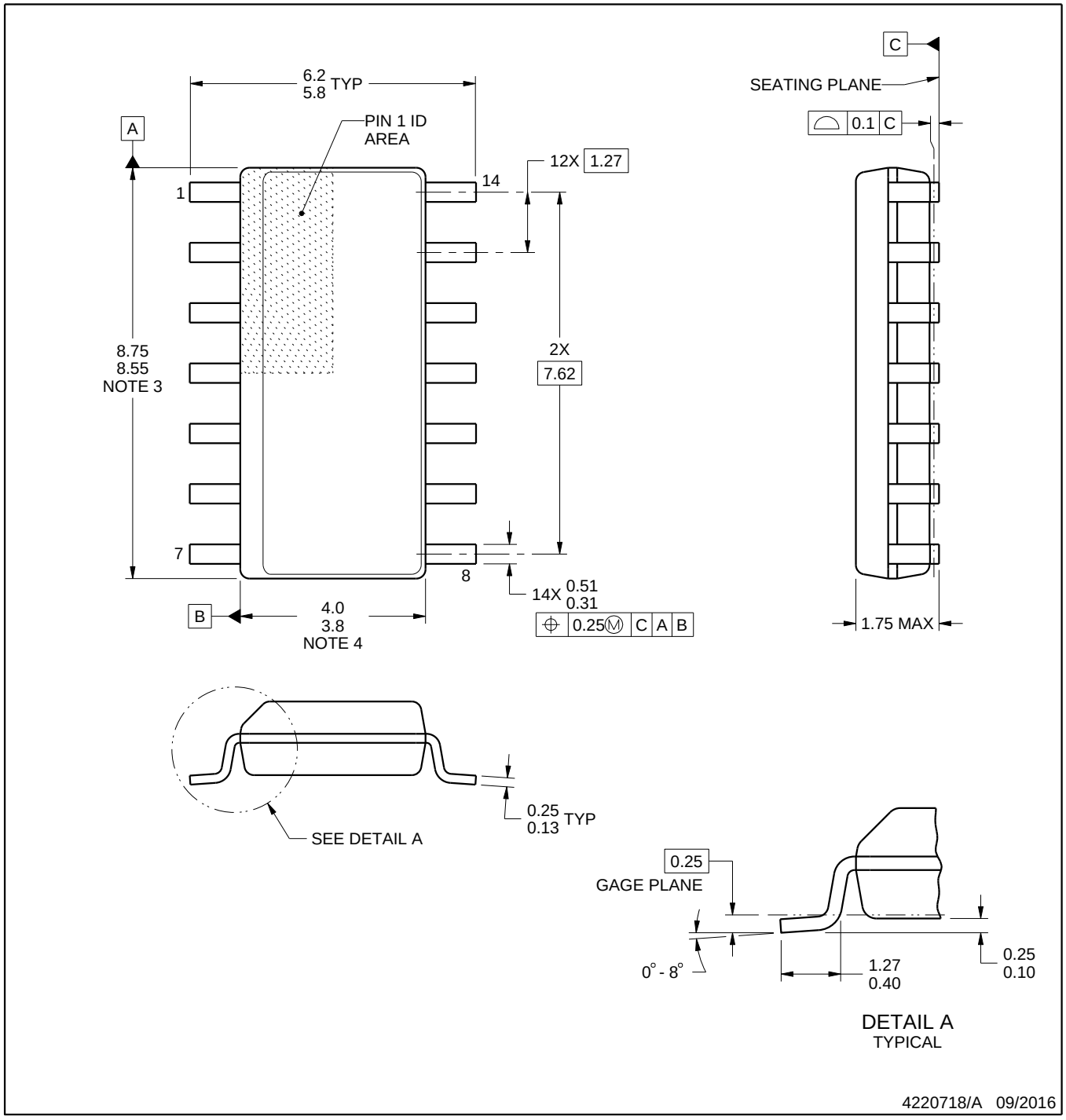

NOTES:

1. All linear dimensions are in millimeters. Dimensions in parenthesis are for reference only. Dimensioning and tolerancing per ASME Y14.5M.
2. This drawing is subject to change without notice.
3. This dimension does not include mold flash, protrusions, or gate burrs. Mold flash, protrusions, or gate burrs shall not exceed 0.15 mm, per side.
4. This dimension does not include interlead flash. Interlead flash shall not exceed 0.43 mm, per side.
5. Reference JEDEC registration MS-012, variation AB.

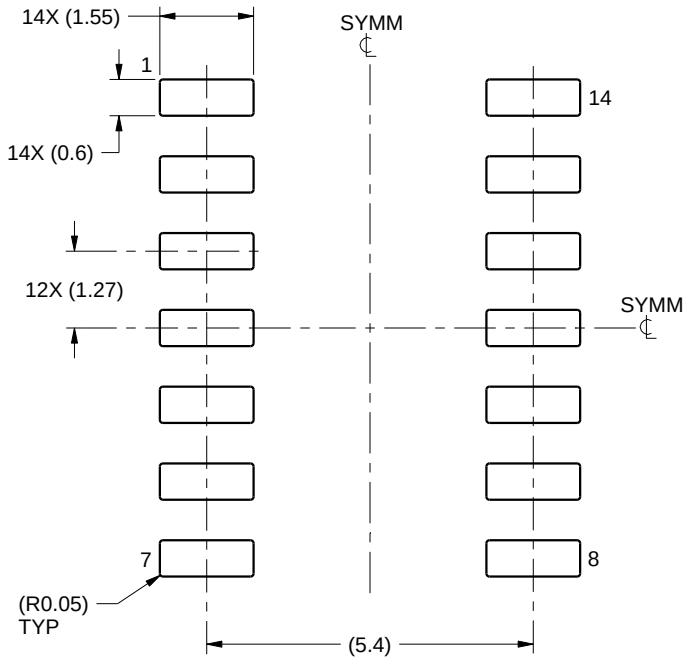

LAND PATTERN EXAMPLE
SCALE:8X

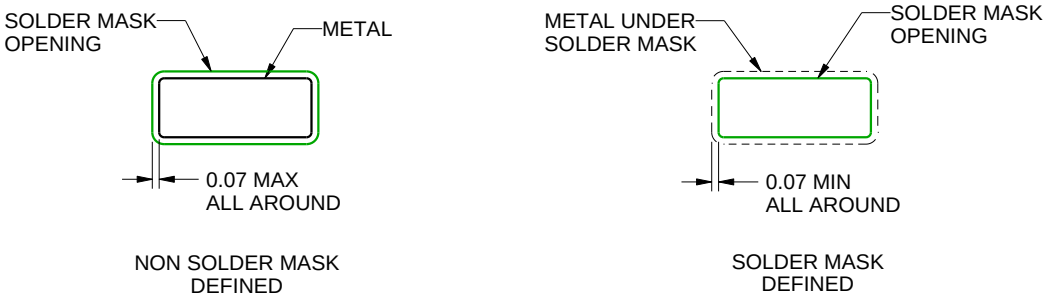

SOLDER MASK DETAILS

4220718/A 09/2016

NOTES: (continued)

6. Publication IPC-7351 may have alternate designs.
7. Solder mask tolerances between and around signal pads can vary based on board fabrication site.

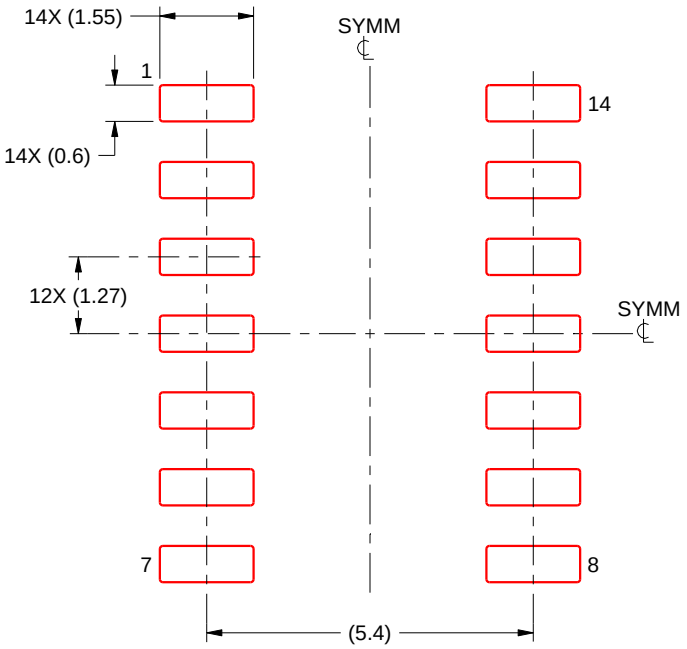

SOLDER PASTE EXAMPLE
BASED ON 0.125 mm THICK STENCIL
SCALE:8X

4220718/A 09/2016

NOTES: (continued)

8. Laser cutting apertures with trapezoidal walls and rounded corners may offer better paste release. IPC-7525 may have alternate design recommendations.
9. Board assembly site may have different recommendations for stencil design.

MECHANICAL DATA

NS (R-PDSO-G)** **PLASTIC SMALL-OUTLINE PACKAGE**

14-PINS SHOWN

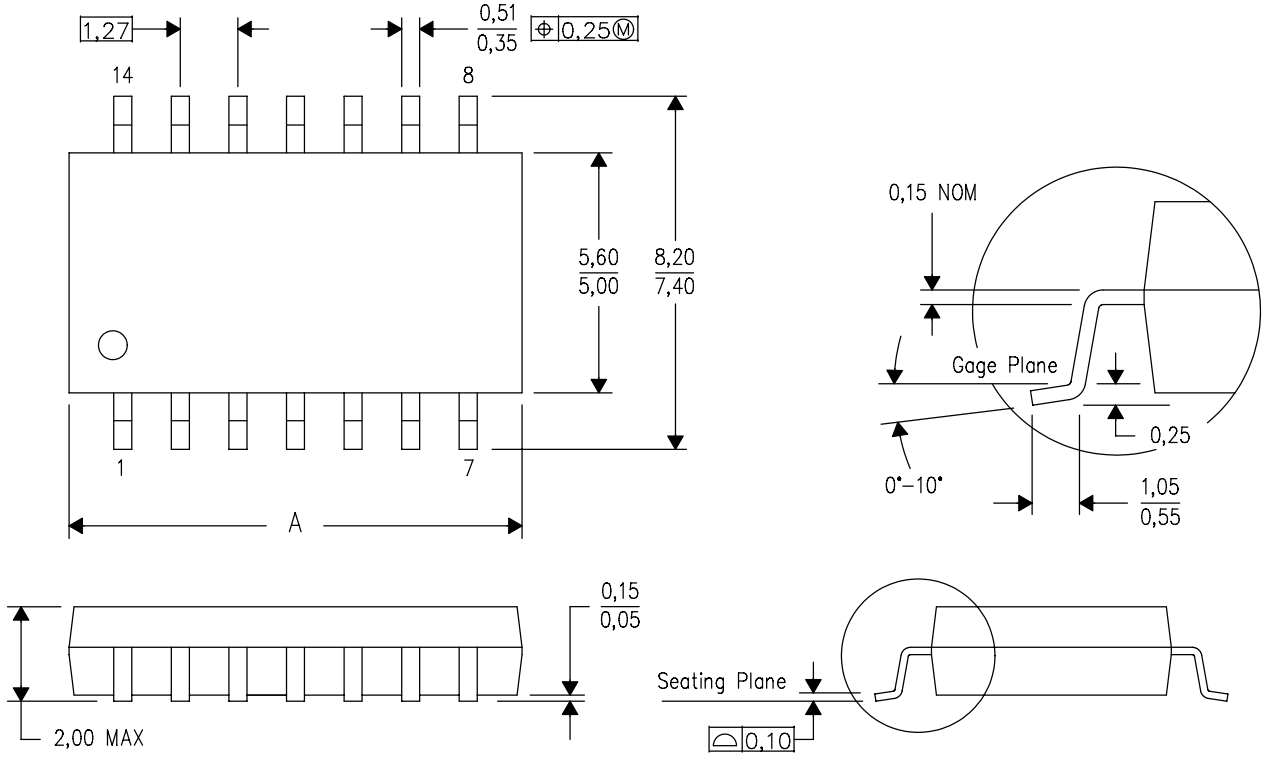

DIM \ PINS **	14	16	20	24
A MAX	10,50	10,50	12,90	15,30
A MIN	9,90	9,90	12,30	14,70

4040062/C 03/03

NOTES:
A. All linear dimensions are in millimeters.
B. This drawing is subject to change without notice.
C. Body dimensions do not include mold flash or protrusion, not to exceed 0,15.

IMPORTANT NOTICE AND DISCLAIMER

TI PROVIDES TECHNICAL AND RELIABILITY DATA (INCLUDING DATA SHEETS), DESIGN RESOURCES (INCLUDING REFERENCE DESIGNS), APPLICATION OR OTHER DESIGN ADVICE, WEB TOOLS, SAFETY INFORMATION, AND OTHER RESOURCES “AS IS” AND WITH ALL FAULTS, AND DISCLAIMS ALL WARRANTIES, EXPRESS AND IMPLIED, INCLUDING WITHOUT LIMITATION ANY IMPLIED WARRANTIES OF MERCHANTABILITY, FITNESS FOR A PARTICULAR PURPOSE OR NON-INFRINGEMENT OF THIRD PARTY INTELLECTUAL PROPERTY RIGHTS.

These resources are intended for skilled developers designing with TI products. You are solely responsible for (1) selecting the appropriate TI products for your application, (2) designing, validating and testing your application, and (3) ensuring your application meets applicable standards, and any other safety, security, regulatory or other requirements.

These resources are subject to change without notice. TI grants you permission to use these resources only for development of an application that uses the TI products described in the resource. Other reproduction and display of these resources is prohibited. No license is granted to any other TI intellectual property right or to any third party intellectual property right. TI disclaims responsibility for, and you will fully indemnify TI and its representatives against, any claims, damages, costs, losses, and liabilities arising out of your use of these resources.

TI’s products are provided subject to TI’s Terms of Sale or other applicable terms available either on ti.com or provided in conjunction with such TI products. TI’s provision of these resources does not expand or otherwise alter TI’s applicable warranties or warranty disclaimers for TI products.

TI objects to and rejects any additional or different terms you may have proposed.

Mailing Address: Texas Instruments, Post Office Box 655303, Dallas, Texas 75265
Copyright © 2025, Texas Instruments Incorporated