SN75ALS172A Quadruple Differential Line Driver

1 Feature

- Meets or exceeds ANSI standards EIA/TIA-422-B and RS-485 and ITU recommendation V.11
- High-speed advanced low-power Schottky circuitry
- Designed for 20MBaud operation in both serial and parallel applications
- Designed for multipoint transmission on long bus lines in noisy environments
- Low supply-current requirements: 55mA max
- Wide positive and negative input/output bus-voltage ranges
- Driver output capacity: ±60mA
- Thermal shutdown protection
- Driver positive and negative current limiting
- Logically interchangeable with SN75172

2 Applications

- Motor drives
- Factory automation and control

3 Description

The SN75ALS172A comprises four line drivers with 3-state differential outputs. Which are designed to meet the requirements of ANSI Standards EIA/TIA-422-B and RS-485 and ITU Recommendation V.11. The device is optimized for balanced multipoint bus transmission at rates of up to 20Mbaud. Each driver features wide positive and negative common-mode output voltage ranges, making the driver suitable for party-line applications in noisy environments.

The SN75ALS172A provides positive- and negative-current limiting, and thermal shutdown for protection from line-fault conditions on the transmission bus line. Shutdown occurs at a junction temperature of approximately 150°C.

The SN75ALS172A is characterized for operation from 0°C to 70°C.

Package Information

PART NUMBER	PACKAGE(1)	PACKAGE SIZE(2)
SN75ALS172A	SOIC (DW, 20)	12.8mm × 10.3mm
	PDIP (N, 16)	19.3mm × 9.4mm

(1) For more information, see Section 10.
(2) The package size (length × width) is a nominal value and includes pins, where applicable.

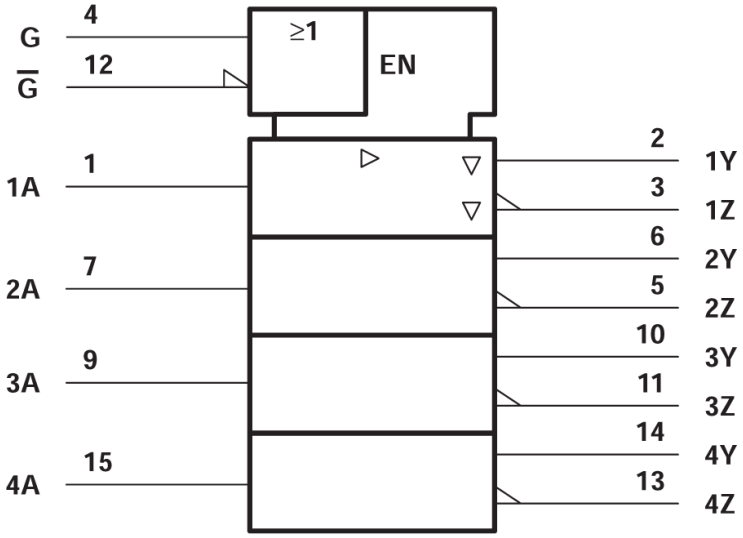

Logic Symbol†

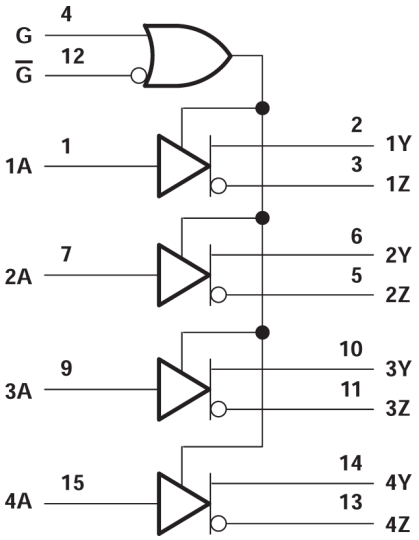

A. Pin numbers shown are for the N package.

Logic Diagram (Positive Logic)

† This symbol is in accordance with ANSI/IEEE Std 91-1984 and IEC Publication 617-12.

An IMPORTANT NOTICE at the end of this data sheet addresses availability, warranty, changes, use in safety-critical applications, intellectual property matters and other important disclaimers. PRODUCTION DATA.

Table of Contents

1 Feature.....1
2 Applications.....1
3 Description.....1
4 Pin Configuration and Functions.....3
5 Specifications.....5
5.1 Absolute Maximum Ratings.....5
5.2 Dissipation Rating Table.....5
5.3 Recommended Operating Conditions.....5
5.4 Thermal Information.....5
5.5 Electrical Characteristics.....6
5.6 Switching Characteristics.....6
6 Parameter Measurement Information.....7
7 Detailed Description.....8
7.1 Device Functional Modes.....8
8 Device and Documentation Support.....9
8.1 Receiving Notification of Documentation Updates.....9
8.2 Support Resources.....9
8.3 Trademarks.....9
8.4 Electrostatic Discharge Caution.....9
8.5 Glossary.....9
9 Revision History.....9
10 Mechanical, Packaging, and Orderable Information.....9

Copyright © 2024 Texas Instruments Incorporated

4 Pin Configuration and Functions

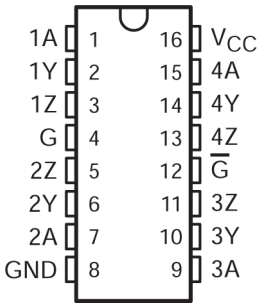

Figure 4-1. N Package (Top View)

Table 4-1. Pin Functions

PIN		TYPE[(1)]	DESCRIPTION
NAME	NO.		
1A	1	I	Driver 1 input
1Y	2	O	Driver 1 output
1Z	3	O	Driver 1 inverted output
G	4	I	Active high enable all drivers
2Z	5	O	Driver 2 inverted output
2Y	6	O	Driver 2 output
2A	7	I	Driver 2 input
GND	8	–	Ground pin
3A	9	I	Driver 3 input
3Y	10	O	Driver 3 output
3Z	11	O	Driver 3 inverted output
$\overline{G}$	12	I	Active low enable all drivers
4Z	13	O	Driver 4 inverted output
4Y	14	O	Driver 4 output
4A	15	I	Driver 4 input
V_{CC}	16	–	Power pin

(1) Signal Types: I = Input, O = Output, I/O = Input or Output.

Copyright © 2024 Texas Instruments Incorporated

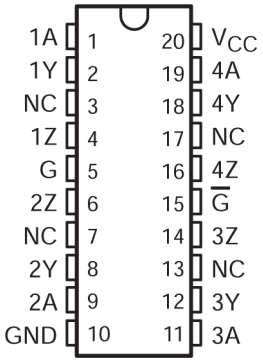

A. NC – No internal connection

Figure 4-2. DW Package (Top View)

Table 4-2. Pin Functions

PIN		TYPE[(1)]	DESCRIPTION
NAME	NO.		
1A	1	I	Driver 1 input
1Y	2	O	Driver 1 output
NC	3	–	No internal connection
1Z	4	O	Driver 1 inverted output
G	5	I	Active high enable all drivers
2Z	6	O	Driver 2 inverted output
NC	7	–	No internal connection
2Y	8	O	Driver 2 output
2A	9	I	Driver 2 input
GND	10	–	Ground pin
3A	11	I	Driver 3 input
3Y	12	O	Driver 3 output
NC	13	–	No internal connection
3Z	14	O	Driver 3 inverted output
$\overline{G}$	15	I	Active low enable all drivers
4Z	16	O	Driver 4 inverted output
NC	17	–	No internal connection
4Y	18	O	Driver 4 output
4A	19	I	Driver 4 input
V_{CC}	20	–	Power pin

(1) Signal Types: I = Input, O = Output, I/O = Input or Output.

Copyright © 2024 Texas Instruments Incorporated

5 Specifications

5.1 Absolute Maximum Ratings

over operating free-air temperature range (unless otherwise noted)[1]

		MIN	MAX	UNIT
V_{CC}	Supply voltage, see note [2]	-0.3	7	V
V_I	Input voltage	-0.3	7	V
V_O	Output voltage range	–9	14	V
P_D	Continuous total dissipation	See Dissipation Rating Table		
T_{stg}	Storage temperature range	–65	150	°C
T_{LEAD}	Lead temperature 1,6 mm (1/16 inch) from case for 10 seconds		260	°C

(1) Stresses beyond those listed under “absolute maximum ratings” may cause permanent damage to the device. These are stress ratings only, and functional operation of the device at these or any other conditions beyond those indicated under “recommended operating conditions” is not implied. Exposure to absolute-maximum-rated conditions for extended periods may affect device reliability.
(2) All voltage values are with respect to network ground terminal.

5.2 Dissipation Rating Table

PACKAGE	$T_A \leq 25°C$ POWER RATING	DERATING FACTOR	$T_A = 70°C$ POWER RATING	$T_A = 85°C$ POWER RATING
DW	1125 mW	9 mW/°C	720 mW	585 mW
N	1150 mW	9.2 mW/°C	736 mW	598 mW

5.3 Recommended Operating Conditions

	MIN	NOM	MAX	UNIT
Supply voltage, V_{CC}	4.75	5	5.25	V
High-level input voltage, V_{IH}	2			V
Low-level input voltage, V_{IL}			0.8	V
Common-mode output voltage, V_{OC}	-7		12	V
High-level output current, I_{OH}			–60	mA
Low-level output current, I_{OL}			60	mA
Operating free-air temperature, T_A	0		70	°C

5.4 Thermal Information

THERMAL METRIC[1]		DW (SOIC) 20-Pins	N (PDIP) 16-Pins	UNIT
$R_{\theta JA}$	Junction-to-ambient thermal resistance	66.8	60.6	°C/W
$R_{\theta JC(top)}$	Junction-to-case (top) thermal resistance	34.4	48.1	°C/W
$R_{\theta JB}$	Junction-to-board thermal resistance	39.7	40.6	°C/W
ψ_{JT}	Junction-to-top characterization parameter	8.9	27.5	°C/W
ψ_{JB}	Junction-to-board characterization parameter	39.0	40.3	°C/W
$R_{\theta JC(bot)}$	Junction-to-case (bottom) thermal resistance	n/a	n/a	°C/W

(1) For more information about traditional and new thermal metrics, see the *Semiconductor and IC package thermal metrics* application report.

Copyright © 2024 Texas Instruments Incorporated

5.5 Electrical Characteristics

over recommended ranges of supply voltage and operating free-air temperature (unless otherwise noted)

PARAMETER		TEST CONDITIONS			MIN	TYP (1)	MAX	UNIT
V_{IK}	Input clamp voltage	I_I = -18mA					-1.5	V
V_O	Output voltage	I_O = 0			0		6	V
$\|V_{OD1}\|$	Differential output voltage	I_o = 0			1.5		6	V
$\|V_{OD2}\|$	Differential output voltage	V_{CC} = 5V,	R_L = 100Ω,	See Figure 6-1	1/2V_{OD1} or 2(2)			V
		R_L = 54Ω,	See Figure 6-1		1.5	2.5	5	
$\|V_{OD3}\|$	Differential output voltage	See Note 2			1.5		5	V
$\Delta\|V_{OD}\|$	Change in magnitude of differential output voltage(3)	R_L = 54Ω or 100Ω,	See Figure 6-1				±0.2	V
V_{OC}	Common-mode output voltage(4)	R_L = 54Ω or 100Ω,	See Figure 6-1		-1		3	V
$\Delta\|V_{OC}\|$	Change in magnitude of common-mode output voltage(3)	R_L = 54Ω or 100Ω,	See Figure 6-1				±0.2	V
I_O	Output current with power off	V_{CC} = 0,	V_O = -7V to 12V				±100	µA
I_{OZ}	High-impedance-state output current	V_O = -7V to 12V					±100	µA
I_{IH}	High-level input current	V_I = 2.7V					20	µA
I_{IL}	Low-level input current	V_I = 0.4V					-100	µA
I_{OS}	Short-circuit output current	V_O = -7V to 12V					±250	mA
I_{CC}	Supply current (all drivers)	No load	Outputs enabled			36	55	mA
			Outputs disabled			15	30	

(1) All typical values are at V_{CC} = 5V and T_A = 25°C.
(2) The minimum V_{OD2} with a 100Ω load is either 1/2 V_{OD1} or 2V, whichever is greater.
(3) $\Delta|V_{OD}|$ and $\Delta|V_{OC}|$ are the changes in magnitude of V_{OD} and V_{OC}, respectively, that occur when the input is changed from a high level to a low level.
(4) In ANSI Standard EIA/TIA-422-B, V_{OC}, which is the average of the two output voltages with respect to ground, is called output offset voltage, V_{OS}.
(5) See EIA Standard RS-485, Figure 6-3-5, Test Termination Measurement 2.

5.6 Switching Characteristics

over recommended ranges of supply voltage and operating free-air temperature, C_L = 50pF

PARAMETER		TEST CONDITIONS		MIN	TYP(1)	MAX	UNIT
$t_{d(OD)}$	Differential-output delay time	R_L = 54Ω,	See Figure 6-2	9	15	22	ns
t_{PZH}	Output enable time to high level	R_L = 110Ω,	See Figure 6-3	30	45	70	ns
t_{PZL}	Output enable time to low level	RL = 110Ω,	See Figure 6-4	25	40	65	ns
t_{PHZ}	Output disable time from high level	R_L = 110Ω,	See Figure 6-3	10	20	35	ns
t_{PLZ}	Output disable time from low level	R_L = 110Ω,	See Figure 6-4	10	30	45	ns

(1) All typical values are at V_{CC} = 5V and T_A = 25°C.

Copyright © 2024 Texas Instruments Incorporated

6 Parameter Measurement Information

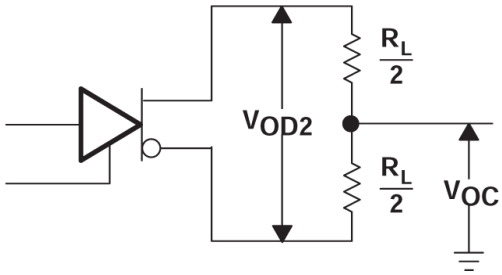

Figure 6-1. Differential and Common-Mode Output Voltages

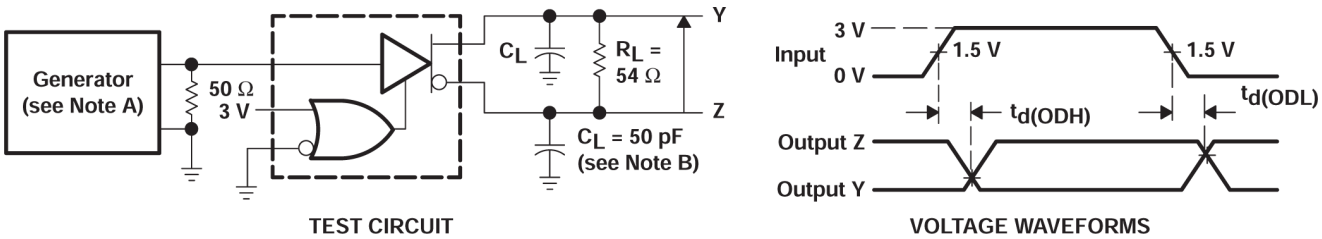

A. The input pulse is supplied by a generator having the following characteristics: PRR = 1MHz, Z_O = 50Ω, duty cycle = 50%, t_f ≤ 10ns, t_r ≤ 10ns.

B. C_L includes probe and stray capacitance.

Figure 6-2. Differential Output Test Circuit and Voltage Waveforms

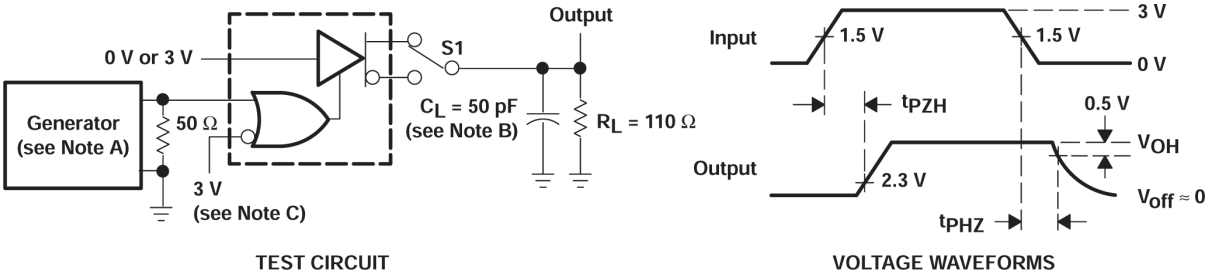

A. The input pulse is supplied by a generator having the following characteristics: PRR = 1MHz, Z_O = 50Ω, duty cycle = 50%, t_f ≤ 5ns, t_r ≤ 5ns.

B. C_L includes probe and stray capacitance.

C. To test the active-low enable $\overline{G}$, ground G and apply an inverted input waveform to $\overline{G}$.

Figure 6-3. Test Circuit and Voltage Waveforms, T_{PZH} and T_{PHZ}

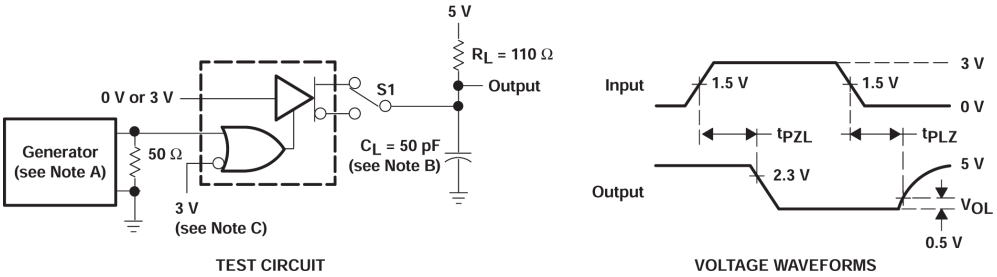

A. The input pulse is supplied by a generator having the following characteristics: PRR = 1MHz, Z_O = 50Ω, duty cycle = 50%, t_f ≤ 5ns, t_r ≤ 5ns.

B. C_L includes probe and stray capacitance.

C. To test the active-low enable G, ground $\overline{G}$ and apply an inverted input waveform to $\overline{G}$.

Figure 6-4. Test Circuit and Voltage Waveforms, T_{PZL} and T_{PLZ}

Copyright © 2024 Texas Instruments Incorporated

7 Detailed Description

7.1 Device Functional Modes

Table 7-1. Function Table (Each Driver)

INPUT[(1)]	ENABLES		OUTPUTS	
A	G	$\overline{G}$	Y	Z
H	H	X	H	L
L	H	X	L	H
H	X	L	H	L
L	X	L	L	H
X	L	H	Z	Z

(1) H = high level, L = low level, X = irrelevant, Z = high impedance (off)

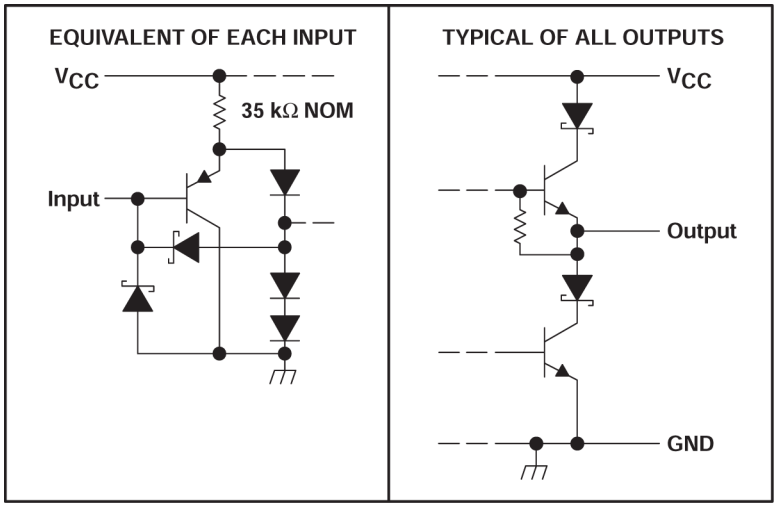

Figure 7-1. Schematics of Inputs and Outputs

Copyright © 2024 Texas Instruments Incorporated

8 Device and Documentation Support

TI offers an extensive line of development tools. Tools and software to evaluate the performance of the device, generate code, and develop solutions are listed below.

8.1 Receiving Notification of Documentation Updates

To receive notification of documentation updates, navigate to the device product folder on ti.com. Click on *Subscribe to updates* to register and receive a weekly digest of any product information that has changed. For change details, review the revision history included in any revised document.

8.2 Support Resources

TI E2E™ support forums are an engineer's go-to source for fast, verified answers and design help — straight from the experts. Search existing answers or ask your own question to get the quick design help you need.

Linked content is provided "AS IS" by the respective contributors. They do not constitute TI specifications and do not necessarily reflect TI's views; see TI's Terms of Use.

8.3 Trademarks

TI E2E™ is a trademark of Texas Instruments.
All trademarks are the property of their respective owners.

8.4 Electrostatic Discharge Caution

This integrated circuit can be damaged by ESD. Texas Instruments recommends that all integrated circuits be handled with appropriate precautions. Failure to observe proper handling and installation procedures can cause damage.

ESD damage can range from subtle performance degradation to complete device failure. Precision integrated circuits may be more susceptible to damage because very small parametric changes could cause the device not to meet its published specifications.

8.5 Glossary

TI Glossary	This glossary lists and explains terms, acronyms, and definitions.

9 Revision History

NOTE: Page numbers for previous revisions may differ from page numbers in the current version.

Changes from Revision D (April 1998) to Revision E (April 2024)	Page
• Changed the numbering format for tables, figures, and cross-references throughout the document	1
• Added the *Thermal Information* table	5
• Changed Note A in Figure 6-2	7

10 Mechanical, Packaging, and Orderable Information

The following pages include mechanical, packaging, and orderable information. This information is the most current data available for the designated devices. This data is subject to change without notice and revision of this document. For browser-based versions of this data sheet, refer to the left-hand navigation.

PACKAGING INFORMATION

Orderable part number	Status (1)	Material type (2)	Package | Pins	Package qty | Carrier	RoHS (3)	Lead finish/ Ball material (4)	MSL rating/ Peak reflow (5)	Op temp (°C)	Part marking (6)
SN75ALS172ADW	Obsolete	Production	SOIC (DW) | 20	-	-	Call TI	Call TI	0 to 70	75ALS172A
SN75ALS172ADWR	Active	Production	SOIC (DW) | 20	2000 | LARGE T&R	Yes	NIPDAU	Level-1-260C-UNLIM	0 to 70	75ALS172A
SN75ALS172ADWR.A	Active	Production	SOIC (DW) | 20	2000 | LARGE T&R	Yes	NIPDAU	Level-1-260C-UNLIM	0 to 70	75ALS172A
SN75ALS172AN	Active	Production	PDIP (N) | 16	25 | TUBE	Yes	NIPDAU	N/A for Pkg Type	0 to 70	SN75ALS172AN
SN75ALS172AN.A	Active	Production	PDIP (N) | 16	25 | TUBE	Yes	NIPDAU	N/A for Pkg Type	0 to 70	SN75ALS172AN

(1) **Status:** For more details on status, see our product life cycle.

(2) **Material type:** When designated, preproduction parts are prototypes/experimental devices, and are not yet approved or released for full production. Testing and final process, including without limitation quality assurance, reliability performance testing, and/or process qualification, may not yet be complete, and this item is subject to further changes or possible discontinuation. If available for ordering, purchases will be subject to an additional waiver at checkout, and are intended for early internal evaluation purposes only. These items are sold without warranties of any kind.

(3) **RoHS values:** Yes, No, RoHS Exempt. See the TI RoHS Statement for additional information and value definition.

(4) **Lead finish/Ball material:** Parts may have multiple material finish options. Finish options are separated by a vertical ruled line. Lead finish/Ball material values may wrap to two lines if the finish value exceeds the maximum column width.

(5) **MSL rating/Peak reflow:** The moisture sensitivity level ratings and peak solder (reflow) temperatures. In the event that a part has multiple moisture sensitivity ratings, only the lowest level per JEDEC standards is shown. Refer to the shipping label for the actual reflow temperature that will be used to mount the part to the printed circuit board.

(6) **Part marking:** There may be an additional marking, which relates to the logo, the lot trace code information, or the environmental category of the part.

Multiple part markings will be inside parentheses. Only one part marking contained in parentheses and separated by a "~" will appear on a part. If a line is indented then it is a continuation of the previous line and the two combined represent the entire part marking for that device.

Important Information and Disclaimer: The information provided on this page represents TI's knowledge and belief as of the date that it is provided. TI bases its knowledge and belief on information provided by third parties, and makes no representation or warranty as to the accuracy of such information. Efforts are underway to better integrate information from third parties. TI has taken and continues to take reasonable steps to provide representative and accurate information but may not have conducted destructive testing or chemical analysis on incoming materials and chemicals. TI and TI suppliers consider certain information to be proprietary, and thus CAS numbers and other limited information may not be available for release.

In no event shall TI's liability arising out of such information exceed the total purchase price of the TI part(s) at issue in this document sold by TI to Customer on an annual basis.

TAPE AND REEL INFORMATION

REEL DIMENSIONS

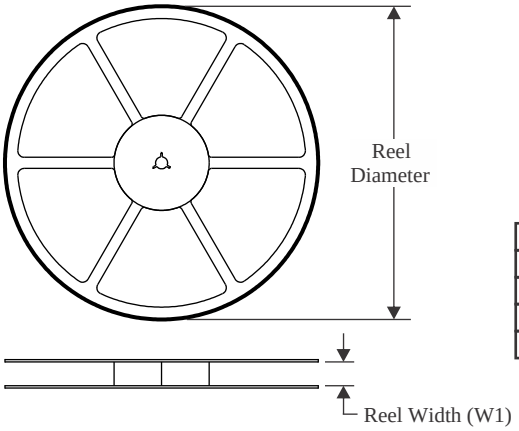

TAPE DIMENSIONS

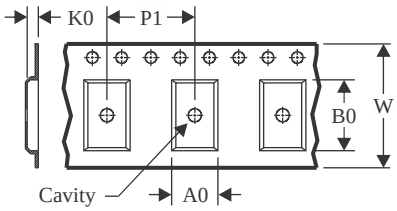

A0	Dimension designed to accommodate the component width
B0	Dimension designed to accommodate the component length
K0	Dimension designed to accommodate the component thickness
W	Overall width of the carrier tape
P1	Pitch between successive cavity centers

QUADRANT ASSIGNMENTS FOR PIN 1 ORIENTATION IN TAPE

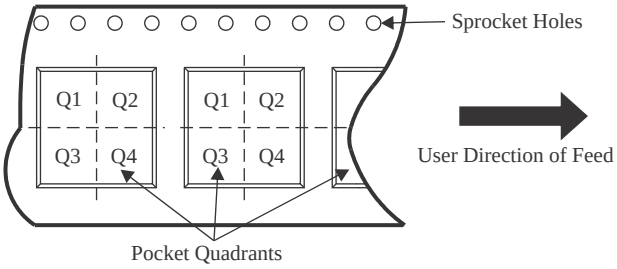

*All dimensions are nominal

Device	Package Type	Package Drawing	Pins	SPQ	Reel Diameter (mm)	Reel Width W1 (mm)	A0 (mm)	B0 (mm)	K0 (mm)	P1 (mm)	W (mm)	Pin1 Quadrant
SN75ALS172ADWR	SOIC	DW	20	2000	330.0	24.4	10.8	13.3	2.7	12.0	24.0	Q1
SN75ALS172ADWR	SOIC	DW	20	2000	330.0	24.4	10.8	13.3	2.7	12.0	24.0	Q1

TAPE AND REEL BOX DIMENSIONS

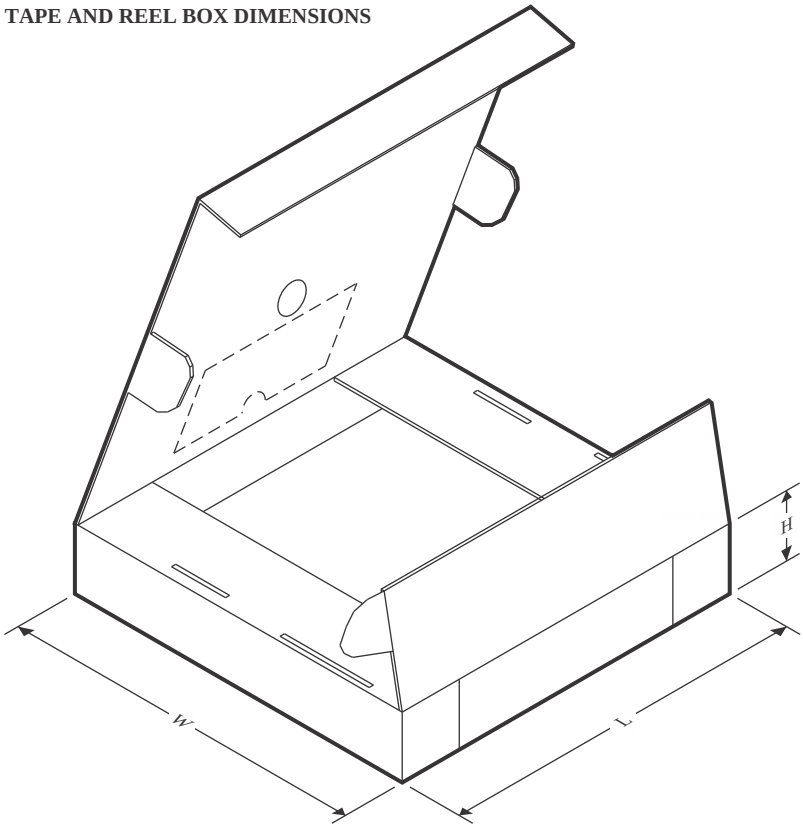

*All dimensions are nominal

Device	Package Type	Package Drawing	Pins	SPQ	Length (mm)	Width (mm)	Height (mm)
SN75ALS172ADWR	SOIC	DW	20	2000	367.0	367.0	45.0
SN75ALS172ADWR	SOIC	DW	20	2000	356.0	356.0	45.0

TUBE

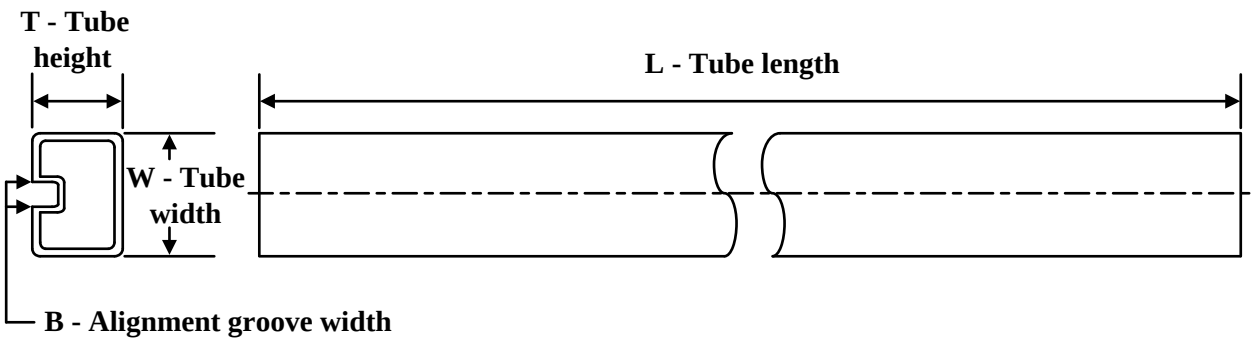

*All dimensions are nominal

Device	Package Name	Package Type	Pins	SPQ	L (mm)	W (mm)	T (µm)	B (mm)
SN75ALS172AN	N	PDIP	16	25	506	13.97	11230	4.32
SN75ALS172AN.A	N	PDIP	16	25	506	13.97	11230	4.32

N (R–PDIP–T**) PLASTIC DUAL–IN–LINE PACKAGE

16 PINS SHOWN

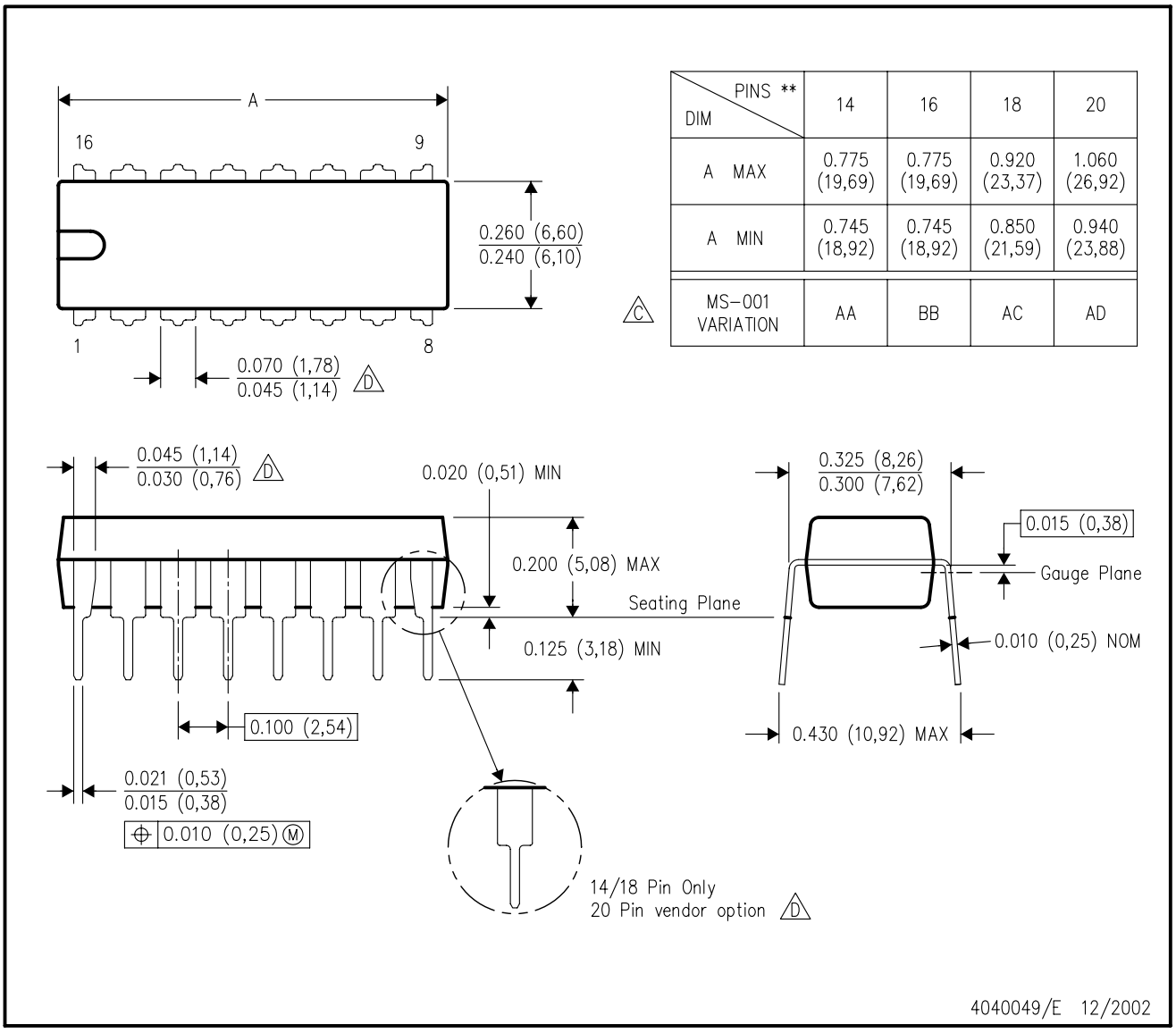

DIM \ PINS **	14	16	18	20
A MAX	0.775 (19,69)	0.775 (19,69)	0.920 (23,37)	1.060 (26,92)
A MIN	0.745 (18,92)	0.745 (18,92)	0.850 (21,59)	0.940 (23,88)
MS–001 VARIATION (C)	AA	BB	AC	AD

NOTES:
A. All linear dimensions are in inches (millimeters).
B. This drawing is subject to change without notice.
C. Falls within JEDEC MS–001, except 18 and 20 pin minimum body length (Dim A).
D. The 20 pin end lead shoulder width is a vendor option, either half or full width.

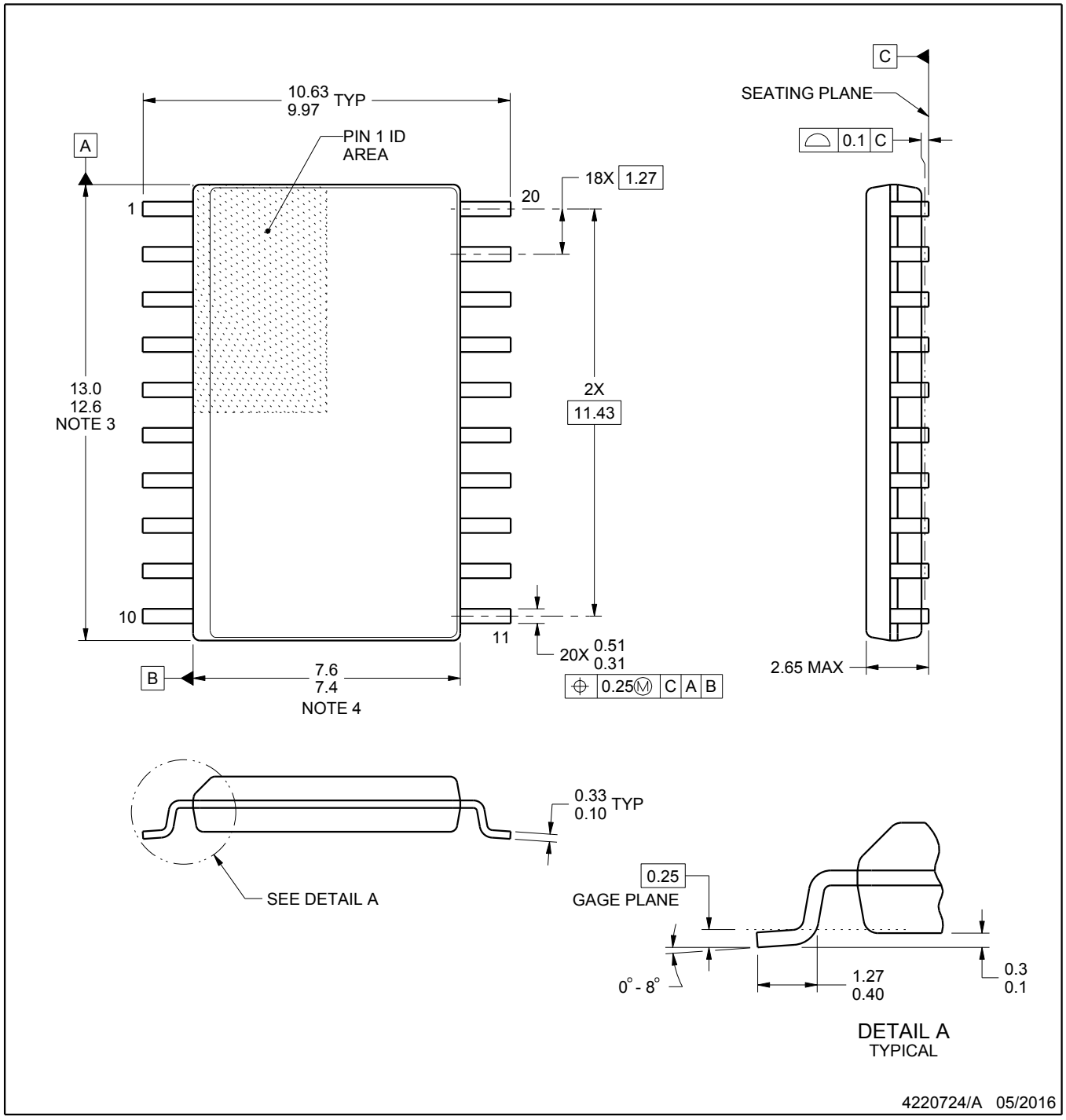

NOTES:

1. All linear dimensions are in millimeters. Dimensions in parenthesis are for reference only. Dimensioning and tolerancing per ASME Y14.5M.
2. This drawing is subject to change without notice.
3. This dimension does not include mold flash, protrusions, or gate burrs. Mold flash, protrusions, or gate burrs shall not exceed 0.15 mm per side.
4. This dimension does not include interlead flash. Interlead flash shall not exceed 0.43 mm per side.
5. Reference JEDEC registration MS-013.

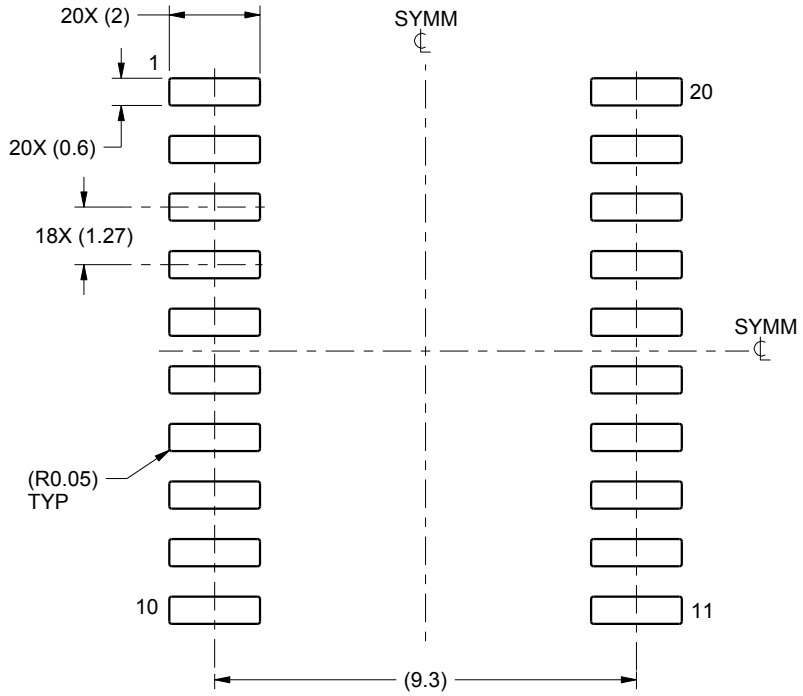

LAND PATTERN EXAMPLE
SCALE:6X

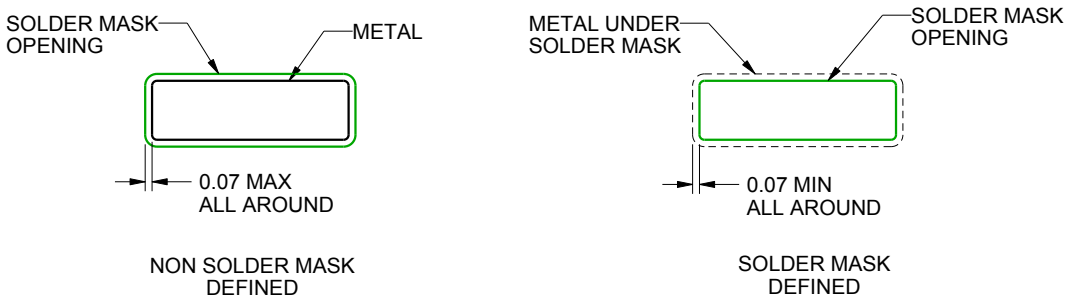

SOLDER MASK DETAILS

4220724/A 05/2016

NOTES: (continued)

6. Publication IPC-7351 may have alternate designs.
7. Solder mask tolerances between and around signal pads can vary based on board fabrication site.

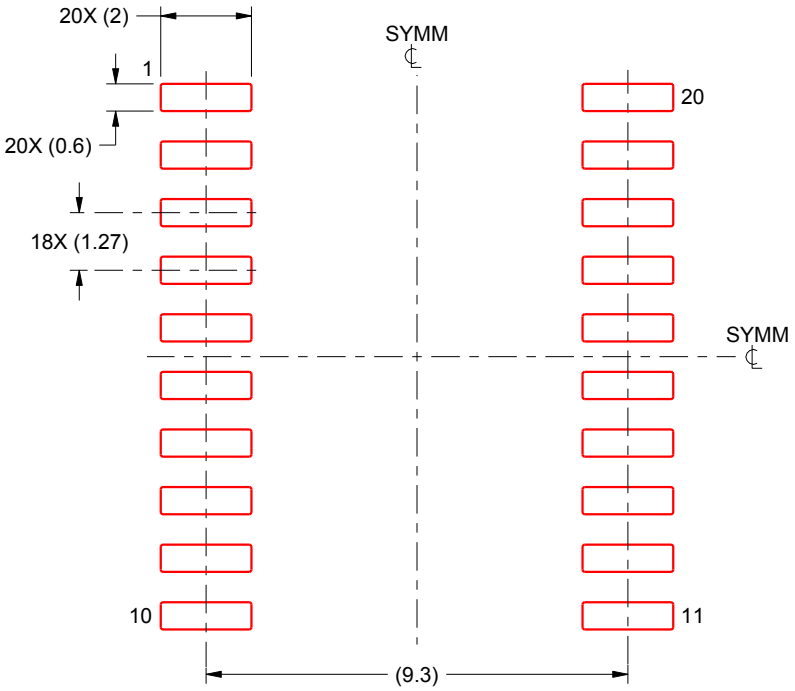

SOLDER PASTE EXAMPLE
BASED ON 0.125 mm THICK STENCIL
SCALE:6X

4220724/A 05/2016

NOTES: (continued)

8. Laser cutting apertures with trapezoidal walls and rounded corners may offer better paste release. IPC-7525 may have alternate design recommendations.
9. Board assembly site may have different recommendations for stencil design.

IMPORTANT NOTICE AND DISCLAIMER

TI PROVIDES TECHNICAL AND RELIABILITY DATA (INCLUDING DATA SHEETS), DESIGN RESOURCES (INCLUDING REFERENCE DESIGNS), APPLICATION OR OTHER DESIGN ADVICE, WEB TOOLS, SAFETY INFORMATION, AND OTHER RESOURCES “AS IS” AND WITH ALL FAULTS, AND DISCLAIMS ALL WARRANTIES, EXPRESS AND IMPLIED, INCLUDING WITHOUT LIMITATION ANY IMPLIED WARRANTIES OF MERCHANTABILITY, FITNESS FOR A PARTICULAR PURPOSE OR NON-INFRINGEMENT OF THIRD PARTY INTELLECTUAL PROPERTY RIGHTS.

These resources are intended for skilled developers designing with TI products. You are solely responsible for (1) selecting the appropriate TI products for your application, (2) designing, validating and testing your application, and (3) ensuring your application meets applicable standards, and any other safety, security, regulatory or other requirements.

These resources are subject to change without notice. TI grants you permission to use these resources only for development of an application that uses the TI products described in the resource. Other reproduction and display of these resources is prohibited. No license is granted to any other TI intellectual property right or to any third party intellectual property right. TI disclaims responsibility for, and you will fully indemnify TI and its representatives against, any claims, damages, costs, losses, and liabilities arising out of your use of these resources.

TI’s products are provided subject to TI’s Terms of Sale or other applicable terms available either on ti.com or provided in conjunction with such TI products. TI’s provision of these resources does not expand or otherwise alter TI’s applicable warranties or warranty disclaimers for TI products.

TI objects to and rejects any additional or different terms you may have proposed.

Mailing Address: Texas Instruments, Post Office Box 655303, Dallas, Texas 75265
Copyright © 2025, Texas Instruments Incorporated