ADC366x 16-Bit, 0.5-MSPS to 65-MSPS, Low-Noise, Low Power, Dual-Channel ADC

1 Features

- 16-Bit 10-MSPS, 25-MSPS, or 65-MSPS ADCs
- Noise floor: –158 dBFS/Hz
- Low power consumption:
  53 mW/ch (10 MSPS) to 94 mW/ch (65 MSPS)
- Latency: 1 cycle (1-wire SLVDS)
- Specified 16-bit, no missing codes
- INL: ± 3 LSB; DNL: ± 0.7 LSB
- Reference: external or internal
- Input bandwidth: 900 MHz (3 dB)
- Industrial temperature range: –40°C to +105°C
- On-chip digital filter (optional)
  - Decimation by 2, 4, 8, 16, 32
  - 32-bit NCO
- Serial LVDS digital interface (2-, 1- and 1/2-wire)
- Small footprint: 40-WQFN (5 mm × 5 mm) package
- Spectral performance (f_{IN} = 10 MHz):
  - SNR: 81.9 dBFS
  - SFDR: 92-dBc HD2, HD3
  - SFDR: 99-dBFS worst spur

2 Applications

- High-speed data acquisition
- Industrial monitoring
- Software defined radio
- Power quality analyzer
- Source measurement unit (SMU)
- Communications Infrastructure
- Spectrum analyzer
- Control loops
- Instrumentation
- Imaging
- Spectroscopy
- Radar
- Sonar

3 Description

The ADC3661, ADC3662, and ADC3663 (ADC366x) family of devices are low-noise, ultra-low power, 16-bit, 10-MSPS to 65-MSPS, high-speed, dual-channel, analog-to-digital converters (ADCs). Designed for low noise performance, these devices deliver a noise spectral density of –158 dBFS/Hz combined with great linearity and dynamic range. The ADC366x offers good dc precision together with IF sampling support making these devices suitable for a wide range of applications. High-speed control loops benefit from the short latency as low as only 1 clock cycle. The ADC consumes only 94 mW/ch at 65 MSPS and power consumption that scales well with lower sampling rates.

The ADC366x uses a serial LVDS (SLVDS) interface to output the data. The devices support a two-lane, a one-lane and a half-lane option. These devices are a pin-to-pin compatible family with 16-bit and 18-bit resolution and different speed grades. The devices come in a 40-pint QFN package (5 x 5 mm), and supports the extended industrial temperature range of –40°C to +105ºC.

Package Information

PART NUMBER	PACKAGE(1)	BODY SIZE (NOM)
ADC366x	WQFN (40)	5.00 × 5.00 mm

(1) For all available packages, see the orderable addendum at the end of the data sheet.

Table 3-1. Device Comparison

PART NUMBER	RESOLUTION	SAMPLING RATE
ADC3661	16 BIT	10 MSPS
ADC3662	16 BIT	25 MSPS
ADC3663	16 BIT	65 MSPS
ADC3664	14 BIT	125 MSPS

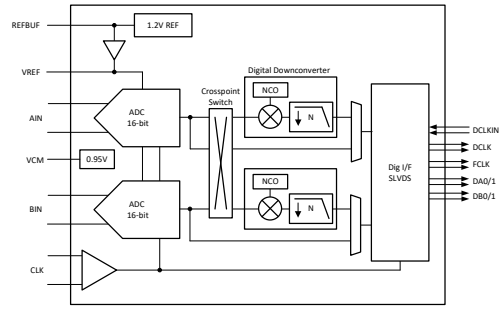

Simplified Block Diagram

An IMPORTANT NOTICE at the end of this data sheet addresses availability, warranty, changes, use in safety-critical applications, intellectual property matters and other important disclaimers. PRODUCTION DATA.

Table of Contents

1 Features....1
2 Applications....1
3 Description....1
4 Revision History....2
5 Pin Configuration and Functions....3
6 Specifications....5
6.1 Absolute Maximum Ratings....5
6.2 ESD Ratings....5
6.3 Recommended Operating Conditions....5
6.4 Thermal Information....5
6.5 Electrical Characteristics - Power Consumption....6
6.6 Electrical Characteristics - DC Specifications....7
6.7 Electrical Characteristics - AC Specifications....9
6.8 Timing Requirements....12
6.9 Typical Characteristics - ADC3661....14
6.10 Typical Characteristics - ADC3662....17
6.11 Typical Characteristics - ADC3663....21
7 Parameter Measurement Information....26
8 Detailed Description....28
8.1 Overview....28
8.2 Functional Block Diagram....28
8.3 Feature Description....29
8.4 Device Functional Modes....50
8.5 Programming....52
8.6 Register Map....54
9 Application Information Disclaimer....70
9.1 Typical Application....70
9.2 Initialization Set Up....73
9.3 Power Supply Recommendations....74
9.4 Layout....75
10 Device and Documentation Support....77
10.1 Receiving Notification of Documentation Updates....77
10.2 Support Resources....77
10.3 Trademarks....77
10.4 Electrostatic Discharge Caution....77
10.5 Glossary....77
11 Mechanical, Packaging, and Orderable Information....77

4 Revision History

NOTE: Page numbers for previous revisions may differ from page numbers in the current version.

Changes from Revision A (December 2021) to Revision B (August 2022)	Page
• Removed the Product Preview note from part number ADC3661 in the *Device Comparison* table	1
• Added the Typical Characteristics - ADC3661 graphs	14
• Added the Typical Characteristics - ADC3662 graphs	17
• Changed Sample N+1 position in Figure 7-2 and Figure 7-3	26
• Added GND symbol to REFGND pin for all voltage reference option diagrams	34
• Added the section Output Bit Mapper	45
• Added Table 8-11	52
• Changed Figure 9-6 with correct indexing	73

Changes from Revision * (February 2021) to Revision A (December 2021)	Page
• Removed the Product Preview note from part number ADC3662 in the *Device Comparison* table	1

Copyright © 2022 Texas Instruments Incorporated

5 Pin Configuration and Functions

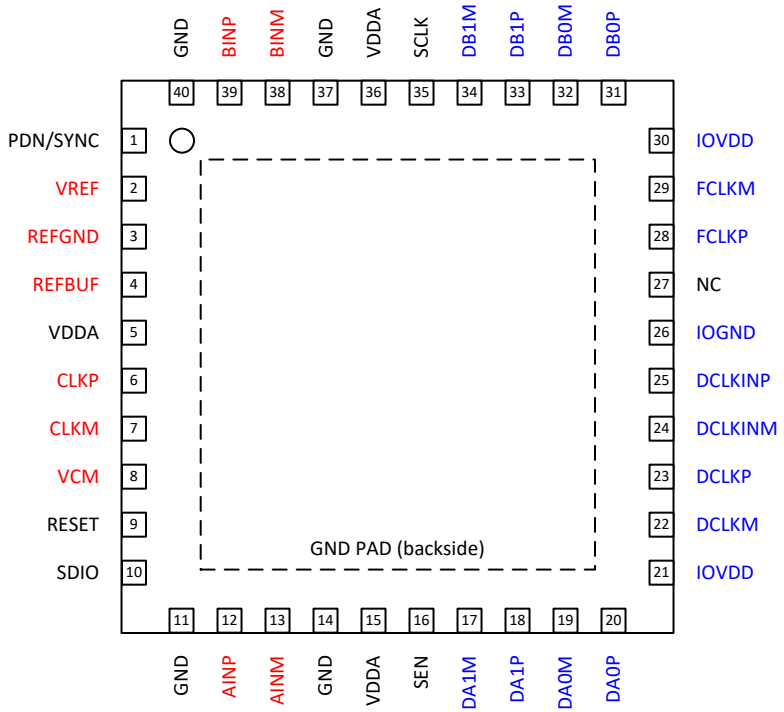

Figure 5-1. RSB (WQFN) Package, 40-Pin (Top View)

Table 5-1. Pin Descriptions

PIN		TYPE	Description
Name	No.		
INPUT/REFERENCE			
AINP	12	I	Positive analog input, channel A
AINM	13	I	Negative analog input, channel A
BINP	39	I	Positive analog input, channel B
BINM	38	I	Negative analog input, channel B
VCM	8	O	Common-mode voltage output for the analog inputs, 0.95V
VREF	2	I	External voltage reference input, 1.6V
REFBUF	4	I	1.2V external voltage reference input for use with internal reference buffer. Internal 100 kΩ pull-up resistor to AVDD. This pin is also used to configure default operating conditions.
REFGND	3	I	Reference ground input, 0V
CLOCK			
CLKP	6	I	Positive differential sampling clock input for the ADC
CLKM	7	I	Negative differential sampling clock input for the ADC
CONFIGURATION			
PDN/SYNC	1	I	Power down/Synchronization input. This pin can be configured via the SPI interface. Active high. This pin has an internal 21 kΩ pull-down resistor.

Copyright © 2022 Texas Instruments Incorporated

Table 5-1. Pin Descriptions (continued)

PIN		TYPE	Description
Name	No.		
RESET	9	I	Hardware reset. Active high. This pin has an internal 21 kΩ pull-down resistor.
SEN	16	I	Serial interface enable. Active low. This pin has an internal 21 kΩ pull-up resistor to AVDD.
SCLK	35	I	Serial interface clock input. This pin has an internal 21 kΩ pull-down resistor.
SDIO	10	I/O	Serial interface data input and output. This pin has an internal 21 kΩ pull-down resistor.
NC	27	-	Do not connect
DIGITAL INTERFACE			
DA0P	20	O	Positive differential serial LVDS output for lane 0, channel A
DA0M	19	O	Negative differential serial LVDS output for lane 0, channel A
DA1P	18	O	Positive differential serial LVDS output for lane 1, channel A
DA1M	17	O	Negative differential serial LVDS output for lane 1, channel A
DB0P	31	O	Positive differential serial LVDS output for lane 0, channel B
DB0M	32	O	Negative differential serial LVDS output for lane 0, channel B
DB1P	33	O	Positive differential serial LVDS output for lane 1, channel B
DB1M	34	O	Negative differential serial LVDS output for lane 1, channel B
DCLKP	23	O	Positive differential serial LVDS bit clock output.
DCLKM	22	O	Negative differential serial LVDS bit clock output.
FCLKP	28	O	Positive differential serial LVDS frame clock output.
FCLKM	29	O	Negative differential serial LVDS frame clock output.
DCLKINP	25	I	Positive differential serial LVDS bit clock input. Internal 100 Ω differential termination.
DCLKINM	24	I	Negative differential serial LVDS bit clock input. Internal 100 Ω differential termination.
POWER SUPPLY			
AVDD	5,15,36	I	Analog 1.8 V power supply
GND	11,14,37,40, PowerPad	I	Ground, 0 V
IOVDD	21,30	I	1.8 V power supply for digital interface
IOGND	26	I	Ground, 0 V for digital interface

Copyright © 2022 Texas Instruments Incorporated

6 Specifications

6.1 Absolute Maximum Ratings

over operating free-air temperature range (unless otherwise noted)[1]

PARAMETER	TEST CONDITIONS	MIN	MAX	UNIT
Supply voltage range, AVDD, IOVDD		–0.3	2.1	V
Supply voltage range, GND, IOGND, REFGND		–0.3	0.3	V
Voltage applied to input pins	AINP/M, BINP/M, CLKP/M, VREF, REFBUF	–0.3	MIN(2.1, AVDD+0.3)	V
	PDN/SYNC, RESET, SCLK, SEN, SDIO	–0.3	MIN(2.1, AVDD+0.3)	
	DCLKINP/M	–0.3	MIN(2.1, IOVDD+0.3)	
Junction temperature, T_J			105	°C
Storage temperature, T_{stg}		–65	150	°C

(1) Stresses beyond those listed under *Absolute Maximum Ratings* may cause permanent damage to the device. These are stress ratings only, which do not imply functional operation of the device at these or any other conditions beyond those indicated under *Recommended Operating Conditions*. Exposure to absolute-maximum-rated conditions for extended periods may affect device reliability.

6.2 ESD Ratings

			VALUE	UNIT
$V_{(ESD)}$	Electrostatic discharge	Human body model (HBM), per ANSI/ESDA/JEDEC JS-001, all pins[1]	2500	V
		Charged device model (CDM), per JEDEC specification JESD22-C101, all pins[2]	1000	

(1) JEDEC document JEP155 states that 500-V HBM allows safe manufacturing with a standard ESD control process.
(2) JEDEC document JEP157 states that 250-V CDM allows safe manufacturing with a standard ESD control process.

6.3 Recommended Operating Conditions

over operating free-air temperature range (unless otherwise noted)

		MIN	NOM	MAX	UNIT
Supply voltage range	AVDD[1]	1.75	1.8	1.85	V
	IOVDD[1]	1.75	1.8	1.85	V
T_A	Operating free-air temperature	–40		105	°C
T_J	Operating junction temperature			105[2]	°C

(1) Measured to GND.
(2) Prolonged use above this junction temperature may increase the device failure-in-time (FIT) rate.

6.4 Thermal Information

THERMAL METRIC[1]		ADC366x RSB (QFN) 40 Pins	UNIT
$R_{\Theta JA}$	Junction-to-ambient thermal resistance	30.7	°C/W
$R_{\Theta JC(top)}$	Junction-to-case (top) thermal resistance	16.4	°C/W
$R_{\Theta JB}$	Junction-to-board thermal resistance	10.5	°C/W
Ψ_{JT}	Junction-to-top characterization parameter	0.2	°C/W
Ψ_{JB}	Junction-to-board characterization parameter	10.5	°C/W
$R_{\Theta JC(bot)}$	Junction-to-case (bottom) thermal resistance	2.0	°C/W

(1) For more information about traditional and new thermal metrics, see the *Semiconductor and IC Package Thermal Metrics* application report, SPRA953.

Copyright © 2022 Texas Instruments Incorporated

6.5 Electrical Characteristics - Power Consumption

Typical values are over the operating free-air temperature range, at T_A = 25°C, full temperature range is T_{MIN} = –40°C to T_{MAX} = 105°C, ADC sampling rate = 65 MSPS, 50% clock duty cycle, AVDD = IOVDD = 1.8 V, external 1.6 V reference, and –1-dBFS differential input, unless otherwise noted

PARAMETER		TEST CONDITIONS	MIN	TYP	MAX	UNIT
ADC3661: 10 MSPS						
I_{AVDD}	Analog supply current	External reference		30	42	mA
I_{IOVDD}	I/O supply current	SLVDS 1-wire		29	45	mA
P_{DIS}	Power dissipation	External reference, SLVDS 1-wire		106		mW
I_{IOVDD}	I/O supply current	1-wire, 1/2-swing		21		mA
		2-wire		36		
		1/2-wire		26		
		4x real decimation, 1-wire		30		
		4x real decimation, 1/2-wire		26		
ADC3662: 25 MSPS						
I_{AVDD}	Analog supply current	External reference		34	42	mA
I_{IOVDD}	I/O supply current	1-wire		31	45	mA
P_{DIS}	Power dissipation	External reference, 1-wire		117		mW
I_{IOVDD}	I/O supply current	1-wire, 1/2-swing		22		mA
		2-wire		36		
		1/2-wire		26		
		4x real decimation, 1-wire		30		
		4x real decimation, 1/2-wire		26		
ADC3663: 65 MSPS						
I_{AVDD}	Analog supply current	External reference		63	82	mA
I_{IOVDD}	I/O supply current	2-wire		41	57	mA
P_{DIS}	Power dissipation	External reference, 2-wire		187	250	mW
I_{IOVDD}	I/O supply current	2-wire, 1/2-swing		30		mA
		4x real decimation, 1-wire		39		
		4x real decimation, 1/2-wire		36		
		16x real decimation, 1-wire		37		
		16x real decimation, 1/2-wire		33		
		4x complex decimation, 1-wire		44		
		16x complex decimation, 1-wire		40		
		16x complex decimation, 1/2-wire		36		
MISCELLANOUS						
I_{AVDD}	Internal reference, additional analog supply current			1		mA
	External 1.2 V reference (REFBUF), additional analog supply current			0.3		
	Single ended clock input, reduces analog supply current by	Enabled via SPI		0.7		
P_{DIS}	Power consumption in global power down mode	Default mask settings, internal reference		5		mW
		Default mask settings, external reference		9		

Copyright © 2022 Texas Instruments Incorporated

6.6 Electrical Characteristics - DC Specifications

Typical values are over the operating free-air temperature range, at T_A = 25°C, full temperature range is T_{MIN} = –40°C to T_{MAX} = 105°C, ADC sampling rate = 65 MSPS, 50% clock duty cycle, AVDD = IOVDD = 1.8 V, external 1.6 V reference, and –1-dBFS differential input, unless otherwise noted

PARAMETER		TEST CONDITIONS	MIN	TYP	MAX	UNIT
DC ACCURACY						
No missing codes			16			bits
PSRR		F_{IN} = 1 MHz		50		dB
ADC3661 - 10 MSPS: DC ACCURACY						
DNL	Differential nonlinearity	F_{IN} = 4.9 MHz		± 0.6	± 0.85	LSB
INL	Integral nonlinearity	F_{IN} = 4.9 MHz		± 3	± 5	LSB
V_{OS_ERR}	Offset error			± 33	± 135	LSB
V_{OS_DRIFT}	Offset drift over temperature			0.12		LSB/ºC
$GAIN_{ERR}$	Gain error	External 1.6V Reference		-0.22		%FSR
$GAIN_{DRIFT}$	Gain drift over temperature	External 1.6V Reference		0.004		ppm/ºC
$GAIN_{ERR}$	Gain error	Internal Reference		-0.26		%FSR
$GAIN_{DRIFT}$	Gain drift over temperature	Internal Reference		106		ppm/ºC
Transition Noise				1.3		LSB
ADC3662 - 25 MSPS: DC ACCURACY						
DNL	Differential nonlinearity	F_{IN} = 5 MHz		± 0.5	± 0.85	LSB
INL	Integral nonlinearity	F_{IN} = 5 MHz		± 3	± 5	LSB
V_{OS_ERR}	Offset error			32	± 135	LSB
V_{OS_DRIFT}	Offset drift over temperature			-0.003		LSB/ºC
$GAIN_{ERR}$	Gain error	External 1.6V Reference		0.003		%FSR
$GAIN_{DRIFT}$	Gain drift over temperature	External 1.6V Reference		1.1		ppm/ºC
$GAIN_{ERR}$	Gain error	Internal Reference		0.26		%FSR
$GAIN_{DRIFT}$	Gain drift over temperature	Internal Reference		106		ppm/ºC
Transition Noise				1.3		LSB
ADC3663 - 65 MSPS: DC ACCURACY						
DNL	Differential nonlinearity	F_{IN} = 5 MHz		± 0.7	± 0.85	LSB
INL	Integral nonlinearity	F_{IN} = 5 MHz		± 3	± 5	LSB
V_{OS_ERR}	Offset error			± 33	± 135	LSB
V_{OS_DRIFT}	Offset drift over temperature			0.05		LSB/ºC
$GAIN_{ERR}$	Gain error	External 1.6V Reference		± 2.3		%FSR
$GAIN_{DRIFT}$	Gain drift over temperature	External 1.6V Reference		68		ppm/ºC
$GAIN_{ERR}$	Gain error	Internal Reference		± 3.5		%FSR
$GAIN_{DRIFT}$	Gain drift over temperature	Internal Reference		242		ppm/ºC
Transition Noise				1.3		LSB

Copyright © 2022 Texas Instruments Incorporated

6.6 Electrical Characteristics - DC Specifications (continued)

Typical values are over the operating free-air temperature range, at T_A = 25°C, full temperature range is T_{MIN} = –40°C to T_{MAX} = 105°C, ADC sampling rate = 65 MSPS, 50% clock duty cycle, AVDD = IOVDD = 1.8 V, external 1.6 V reference, and –1-dBFS differential input, unless otherwise noted

PARAMETER		TEST CONDITIONS	MIN	TYP	MAX	UNIT
ADC ANALOG INPUT (AINP/M, BINP/M)						
FS	Input full scale	Differential		3.2		Vpp
V_{CM}	Input common model voltage		0.9	0.95	1.0	V
R_{IN}	Differential input resistance	F_{IN} = 100 kHz		8		kΩ
C_{IN}	Differential input Capacitance	F_{IN} = 100 kHz		7		pF
V_{OCM}	Output common mode voltage			0.95		V
BW	Analog Input Bandwidth (-3dB)			900		MHz
Internal Voltage Reference						
V_{REF}	Internal reference voltage			1.6		V
V_{REF} Output Impedance				8		Ω
External reference voltage				1.2		V
Reference Input Buffer (REFBUF)						
V_{REF}				1.6		V
Input Current				0.3		mA
Input impedance				5.3		kΩ
External voltage reference (VREF)						
Input clock frequency	Input clock frequency		0.5		65	MHz
V_{ID}		Differential input voltage		1	3.6	Vpp
V_{CM}		Input common mode voltage		0.9		V
Clock Input (CLKP/M)						
R_{IN}				5		kΩ
C_{IN}	Single ended input capacitance			1.5		pF
Clock duty cycle	Clock duty cycle		40	50	60	%
Digital Inputs (RESET, PDN, SCLK, SEN, SDIO)						
V_{IH}	High level input voltage		1.4			V
V_{IL}	Low level input voltage				0.4	V
I_{IH}	High level input current			90	150	uA
I_{IL}	Low level input current		-150	-90		uA
C_I	Input capacitance			1.5		pF
V_{OH}	High level output voltage		IOVDD – 0.1	IOVDD		V
Digital Output (SDOUT)						
V_{OL}	Low level output voltage	I_{LOAD} = 400 uA			0.1	V
Output data rate	Output data rate	per differential SLVDS output pair			1000	Mbps
SLVDS Interface						
V_{ID}	Differential input voltage	DCLKIN	200	350	650	mVpp
V_{CM}	Input common mode voltage	DCLKIN	1	1.2	1.3	V
V_{OD}	Differential output voltage		500	700	850	mVpp
V_{CM}	Output common mode voltage			1.0		V

Copyright © 2022 Texas Instruments Incorporated

6.7 Electrical Characteristics - AC Specifications

Typical values are over the operating free-air temperature range, at T_A = 25°C, full temperature range is T_{MIN} = –40°C to T_{MAX} = 105°C, ADC sampling rate = 10-65 MSPS, external reference, 50% clock duty cycle, AVDD = IOVDD = 1.8 V, external 1.6 V reference, and –1-dBFS differential input, unless otherwise noted

PARAMETER		TEST CONDITIONS	MIN	TYP	MAX	UNIT
ADC3661: 10 MSPS						
NSD	Noise Spectral Density	No input signal		-150.0		dBFS/Hz
SNR	Signal to noise ratio	f_{IN} = 1.1 MHz		82.0		dBFS
		f_{IN} = 4.9 MHz	80.5	82.0		
		f_{IN} = 9.9 MHz		81.9		
SINAD	Signal to noise and distortion ratio	f_{IN} = 1.1 MHz		81.8		dBFS
		f_{IN} = 4.9 MHz	80.0	81.8		
		f_{IN} = 9.9 MHz		81.7		
ENOB	Effective number of bits	f_{IN} = 1.1 MHz		13.3		bit
		f_{IN} = 4.9 MHz	13.0	13.3		
		f_{IN} = 9.9 MHz		13.3		
THD	Total Harmonic Distortion (First five harmonics)	f_{IN} = 1.1 MHz		87		dBc
		f_{IN} = 4.9 MHz	81	87		
		f_{IN} = 9.9 MHz		91		
SFDR	Spur free dynamic range including second and third harmonic distortion	f_{IN} = 1.1 MHz		88		dBc
		f_{IN} = 4.9 MHz	81	87		
		f_{IN} = 9.9 MHz		92		
Non HD2,3	Spur free dynamic range (excluding HD2 and HD3)	f_{IN} = 1.1 MHz		101		dBFS
		f_{IN} = 4.9 MHz	91	96		
		f_{IN} = 9.9 MHz		99		
IMD3	Two tone inter-modulation distortion	f_1 = 3 MHz, f_2 = 4 MHz, A_{IN} = -7 dBFS/tone		89		dBc

6.7 Electrical Characteristics - AC Specifications (continued)

Typical values are over the operating free-air temperature range, at T_A = 25°C, full temperature range is T_{MIN} = –40°C to T_{MAX} = 105°C, ADC sampling rate = 10-65 MSPS, external reference, 50% clock duty cycle, AVDD = IOVDD = 1.8 V, external 1.6 V reference, and –1-dBFS differential input, unless otherwise noted

PARAMETER		TEST CONDITIONS	MIN	TYP	MAX	UNIT
ADC3662: 25 MSPS						
NSD	Noise Spectral Density	No input signal		-154.0		dBFS/Hz
SNR	Signal to noise ratio	f_{IN} = 1.1 MHz		82.0		dBFS
		f_{IN} = 5 MHz	80.5	82.0		
		f_{IN} = 10 MHz		81.9		
		f_{IN} = 20 MHz		81.6		
		f_{IN} = 40 MHz		78.6		
SINAD	Signal to noise and distortion ratio	f_{IN} = 1.1 MHz		81.9		dBFS
		f_{IN} = 5 MHz	80	81.9		
		f_{IN} = 10 MHz		81.9		
		f_{IN} = 20 MHz		81.5		
		f_{IN} = 40 MHz		78.4		
ENOB	Effective number of bits	f_{IN} = 1.1 MHz		13.3		bit
		f_{IN} = 5 MHz	13.0	13.3		
		f_{IN} = 10 MHz		13.3		
		f_{IN} = 20 MHz		13.2		
		f_{IN} = 40 MHz		12.7		
THD	Total Harmonic Distortion (First five harmonics)	f_{IN} = 1.1 MHz		85		dBc
		f_{IN} = 5 MHz	81	89		
		f_{IN} = 10 MHz		88		
		f_{IN} = 20 MHz		83		
		f_{IN} = 40 MHz		86		
SFDR	Spur free dynamic range including second and third harmonic distortion	f_{IN} = 1.1 MHz		86		dBc
		f_{IN} = 5 MHz	82	90		
		f_{IN} = 10 MHz		89		
		f_{IN} = 20 MHz		83		
		f_{IN} = 40 MHz		89		
Non HD2,3	Spur free dynamic range (excluding HD2 and HD3)	f_{IN} = 1.1 MHz		101		dBFS
		f_{IN} = 5 MHz	90	101		
		f_{IN} = 10 MHz		103		
		f_{IN} = 20 MHz		99		
		f_{IN} = 40 MHz		94		
IMD3	Two tone inter-modulation distortion	f_1 = 3 MHz, f_2 = 4 MHz, A_{IN} = -7 dBFS/tone		84		dBc
		f_1 = 10 MHz, f_2 = 12 MHz, A_{IN} = -7 dBFS/tone		87		

Copyright © 2022 Texas Instruments Incorporated

6.7 Electrical Characteristics - AC Specifications (continued)

Typical values are over the operating free-air temperature range, at T_A = 25°C, full temperature range is T_{MIN} = –40°C to T_{MAX} = 105°C, ADC sampling rate = 10-65 MSPS, external reference, 50% clock duty cycle, AVDD = IOVDD = 1.8 V, external 1.6 V reference, and –1-dBFS differential input, unless otherwise noted

PARAMETER		TEST CONDITIONS	MIN	TYP	MAX	UNIT
ADC3663: 65 MSPS						
NSD	Noise Spectral Density	No input signal		-158.0		dBFS/Hz
SNR	Signal to noise ratio	f_{IN} = 1.1 MHz		82.0		dBFS
		f_{IN} = 5 MHz	80	82.0		
		f_{IN} = 10 MHz		81.9		
		f_{IN} = 20 MHz		81.6		
		f_{IN} = 40 MHz		80.5		
		f_{IN} = 70 MHz		76.9		
SINAD	Signal to noise and distortion ratio	f_{IN} = 1.1 MHz		80.0		dBFS
		f_{IN} = 5 MHz		80.0		
		f_{IN} = 10 MHz		80.0		
		f_{IN} = 20 MHz		80.0		
		f_{IN} = 40 MHz		78.5		
		f_{IN} = 70 MHz		75.5		
ENOB	Effective number of bits	f_{IN} = 1.1 MHz		13.0		bit
		f_{IN} = 5 MHz		13.0		
		f_{IN} = 10 MHz		13.0		
		f_{IN} = 20 MHz		13.0		
		f_{IN} = 40 MHz		12.7		
		f_{IN} = 70 MHz		12.3		
THD	Total Harmonic Distortion (First five harmonics)	f_{IN} = 1.1 MHz		81		dBc
		f_{IN} = 5 MHz	81	88		
		f_{IN} = 10 MHz		89		
		f_{IN} = 20 MHz		83		
		f_{IN} = 40 MHz		82		
		f_{IN} = 70 MHz		80		
SFDR	Spur free dynamic range including second and third harmonic distortion	f_{IN} = 1.1 MHz		82		dBc
		f_{IN} = 5 MHz	82	89		
		f_{IN} = 10 MHz		92		
		f_{IN} = 20 MHz		84		
		f_{IN} = 40 MHz		84		
		f_{IN} = 70 MHz		82		
Non HD2,3	Spur free dynamic range (excluding HD2 and HD3)	f_{IN} = 1.1 MHz		100		dBFS
		f_{IN} = 5 MHz	91	99		
		f_{IN} = 10 MHz		99		
		f_{IN} = 20 MHz		96		
		f_{IN} = 40 MHz		91		
		f_{IN} = 70 MHz		86		
IMD3	Two tone inter-modulation distortion	f_1 = 1 MHz, f_2 = 2 MHz, A_{IN} = -7 dBFS/tone		100		dBc
		f_1 = 10 MHz, f_2 = 12 MHz, A_{IN} = -7 dBFS/tone		104		

Copyright © 2022 Texas Instruments Incorporated

6.8 Timing Requirements

Typical values are over the operating free-air temperature range, at T_A = 25°C, full temperature range is T_{MIN} = –40°C to T_{MAX} = 105°C, ADC sampling rate = 65 MSPS, 50% clock duty cycle, AVDD = IOVDD = 1.8 V, external 1.6 V reference, and –1-dBFS differential input, unless otherwise noted

PARAMETER		TEST CONDITIONS	MIN	NOM	MAX	UNIT
ADC Timing Specifications						
t_{AD}	Aperture Delay			0.85		ns
t_A	Aperture Jitter	square wave clock with fast edges		180		fs
t_J	Jitter on DCLKIN				± 50	ps
t_{ACQ}	Signal acquisition period, referenced to sampling clock falling edge	F_S = 65 Msps		$-T_S/4$		Sampling Clock Period
		F_S = 25 Msps		$-T_S/2$		
		F_S = 10 Msps		$-T_S/2$		
t_{CONV}	Signal conversion period, referenced to sampling clock falling edge	F_S = 65 Msps		$+T_S \times 5/8$		Sampling Clock Period
		F_S = 25 Msps		$+T_S \times 3/8$		
		F_S = 10 Msps		$+T_S \times 1/5$		
Wake up time	Time to valid data after coming out of power down. Internal reference.	Bandgap reference enabled, single ended clock			17.6	us
		Bandgap reference enabled, differential clock			12.9	
		Bandgap reference disabled, single ended clock			2.2	ms
		Bandgap reference disabled, differential clock			2.2	
	Time to valid data after coming out of power down. External 1.6V reference.	Bandgap reference enabled, single ended clock			15.9	us
		Bandgap reference enabled, differential clock			12.9	
		Bandgap reference disabled, single ended clock			1.7	ms
		Bandgap reference disabled, differential clock			1.7	
$t_{S,SYNC}$	Setup time for SYNC input signal	Referenced to sampling clock rising edge	500			ps
$t_{H,SYNC}$	Hold time for SYNC input signal		600			
ADC Latency	Signal input to data output	2-wire SLVDS		2		Clock cycles
		1-wire SLVDS		1		
		1/2-wire SLVDS		1		
Add. Latency	Real decimation by 2			21		Output clock cycles
	Complex decimation by 2			22		
	Real or complex decimation by 4, 8, 16, 32			23		
Interface Timing: Serial LVDS Interface						
t_{PD}	Propagation delay: sampling clock falling edge to DCLK rising edge	Delay between sampling clock falling edge to DCLKIN falling edge < 2.5ns. T_{DCLK} = DCLK period t_{CDCLK} = Sampling clock falling edge to DCLKIN falling edge	$2 + T_{DCLK} + t_{CDCLK}$	$3 + T_{DCLK} + t_{CDCLK}$	$4 + T_{DCLK} + t_{CDCLK}$	ns
		Delay between sampling clock falling edge to DCLKIN falling edge >= 2.5ns. T_{DCLK} = DCLK period t_{CDCLK} = Sampling clock falling edge to DCLKIN falling edge	$2 + t_{CDCLK}$	$3 + t_{CDCLK}$	$4 + t_{CDCLK}$	

Copyright © 2022 Texas Instruments Incorporated

6.8 Timing Requirements (continued)

Typical values are over the operating free-air temperature range, at T_A = 25°C, full temperature range is T_{MIN} = –40°C to T_{MAX} = 105°C, ADC sampling rate = 65 MSPS, 50% clock duty cycle, AVDD = IOVDD = 1.8 V, external 1.6 V reference, and –1-dBFS differential input, unless otherwise noted

PARAMETER		TEST CONDITIONS	MIN	NOM	MAX	UNIT
t_{CD}	DCLK rising edge to output data delay, 2-wire SLVDS	Fout = 10 MSPS, DA/B0,1 = 80 MBPS	0.0	0.1		ns
		Fout = 25 MSPS, DA/B0,1 = 200 MBPS	0.0	0.1		
		Fout = 65 MSPS, DA/B0,1 = 520 MBPS	0.0	0.1		
	DCLK rising edge to output data delay, 1-wire SLVDS	Fout = 10 MSPS, DA/B0 = 160 MBPS	0.0	0.1		
		Fout = 25 MSPS, DA/B0 = 400 MBPS	0.0	0.1		
		Fout = 62.5 MSPS, DA/B0= 1000 MBPS	-0.6	0.1		
	DCLK rising edge to output data delay, 1/2-wire SLVDS	Fout = 5 MSPS, DA0 = 160 MBPS	0.0	0.1		
		Fout = 10 MSPS, DA0 = 320 MBPS	0.0	0.1		
		Fout = 25 MSPS, DA0 = 800 MBPS	0.0	0.1		
t_{DV}	Data valid, 2-wire SLVDS	Fout = 10 MSPS, DA/B0,1 = 80 MBPS	11.9	12.1		ns
		Fout = 25 MSPS, DA/B0,1 = 200 MBPS	4.5	4.6		
		Fout = 65 MSPS, DA/B0,1 = 520 MBPS	1.4	1.5		
	Data valid, 1-wire SLVDS	Fout = 10 MSPS, DA/B0 = 160 MBPS	5.7	5.8		
		Fout = 25 MSPS, DA/B0 = 400 MBPS	2.0	2.1		
		Fout = 62.5 MSPS, DA/B0= 1000 MBPS	0.5	0.6		
	Data valid, 1/2-wire SLVDS	Fout = 5 MSPS, DA0 = 160 MBPS	5.7	5.8		
		Fout = 10 MSPS, DA0 = 320 MBPS	2.7	2.8		
		Fout = 25 MSPS, DA0 = 800 MBPS	0.8	0.9		
SERIAL PROGRAMMING INTERFACE (SCLK, SEN, SDIO) - Input						
$f_{CLK(SCLK)}$	Serial clock frequency				20	MHz
$t_{SU(SEN)}$	SEN to rising edge of SCLK		10			ns
$t_{H(SEN)}$	SEN from rising edge of SCLK		9			ns
$t_{SU(SDIO)}$	SDIO to rising edge of SCLK		17			ns
$t_{H(SDIO)}$	SDIO from rising edge of SCLK		9			ns
SERIAL PROGRAMMING INTERFACE (SDIO) - Output						
$t_{(OZD)}$	SDIO tri-state to driven		3.9		10.8	ns
$t_{(ODZ)}$	SDIO data to tri-state		3.4		14	ns
$t_{(OD)}$	SDIO valid from falling edge of SCLK		3.9		10.8	ns

Copyright © 2022 Texas Instruments Incorporated

6.9 Typical Characteristics - ADC3661

Typical values at T_A = 25 °C, ADC sampling rate = 10 MSPS, A_{IN} = –1 dBFS differential input, AVDD = IOVDD = 1.8 V, external 1.6 V voltage reference, unless otherwise noted.

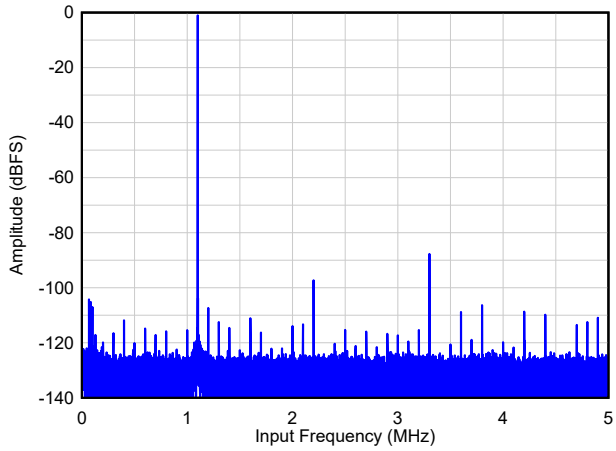

SNR = 82.1 dBFS, HD23 = 87 dBc, Non HD23 = 102 dBFS

Figure 6-1. Single Tone FFT at F_{IN} = 1.1 MHz

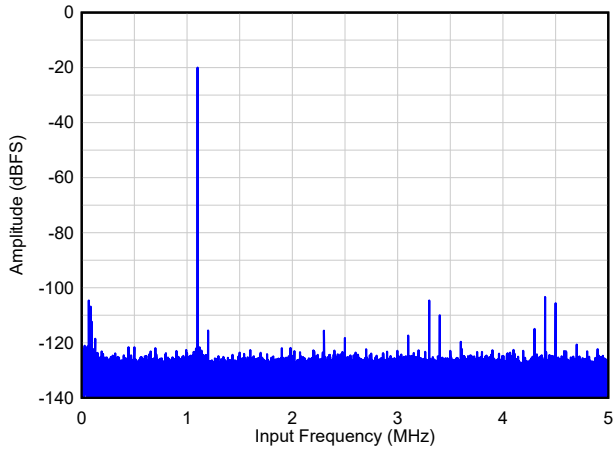

SNR = 82.5 dBFS, HD23 = 82 dBc, Non HD23 = 102 dBFS

Figure 6-2. Single Tone FFT at F_{IN} = 1.1 MHz, A_{IN} = -20 dBFS

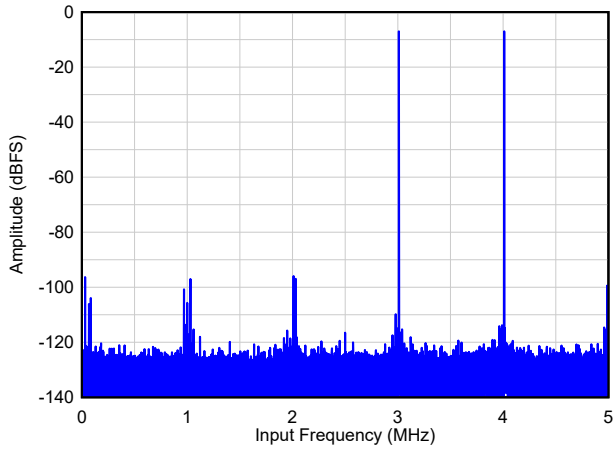

A_{IN} = -7 dBFS/tone, IMD3 = 88 dBc

Figure 6-3. Two Tone FFT at F_{IN} = 3,4 MHz

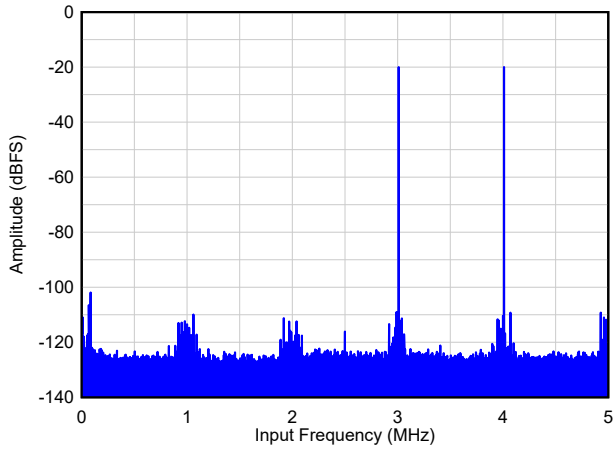

A_{IN} = -20 dBFS/tone, IMD3 = 89 dBc

Figure 6-4. Two Tone FFT at F_{IN} = 3,4 MHz

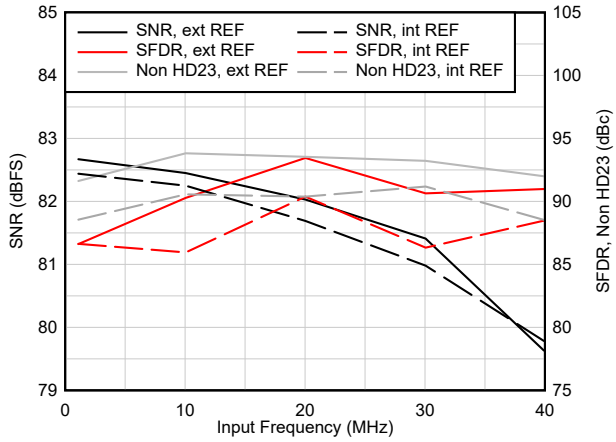

Figure 6-5. AC Performance vs Input Frequency

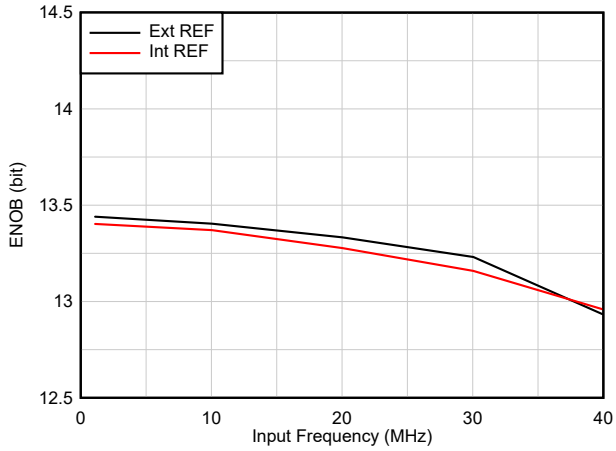

Figure 6-6. ENOB vs Input Frequency

Copyright © 2022 Texas Instruments Incorporated

6.9 Typical Characteristics - ADC3661 (continued)

Typical values at T_A = 25 °C, ADC sampling rate = 10 MSPS, A_{IN} = –1 dBFS differential input, AVDD = IOVDD = 1.8 V, external 1.6 V voltage reference, unless otherwise noted.

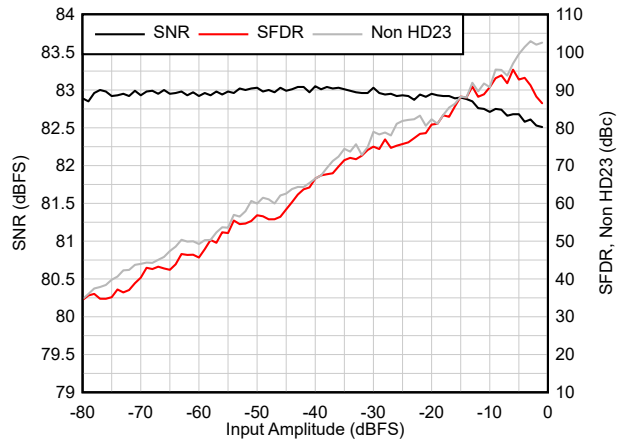

F_{IN} = 1.1 MHz

Figure 6-7. AC Performance vs Input Amplitude

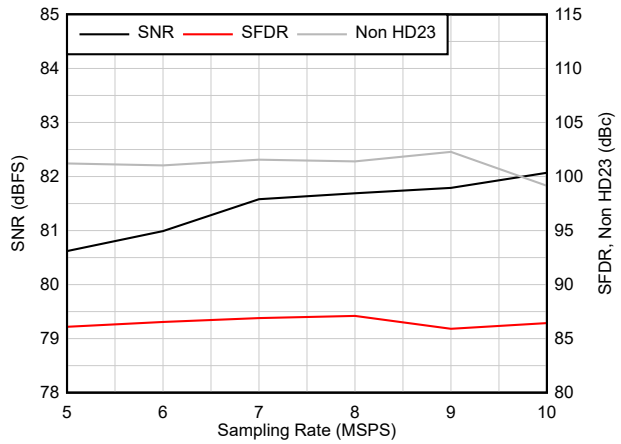

F_{IN} = 1.1 MHz

Figure 6-8. AC Performance vs Sampling Rate

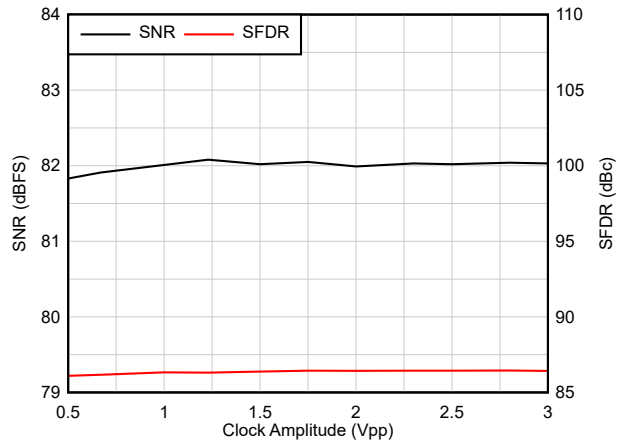

F_{IN} = 1.1 MHz

Figure 6-9. AC Performance vs Clock Amplitude

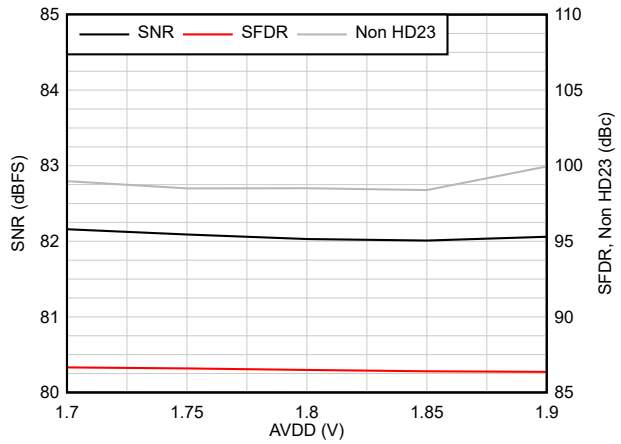

F_{IN} = 1.1 MHz

Figure 6-10. AC Performance vs AVDD

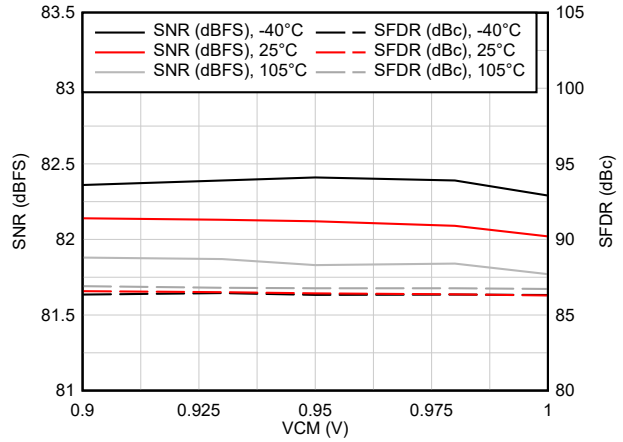

F_{IN} = 1.1 MHz

Figure 6-11. AC Performance vs VCM vs Temperature

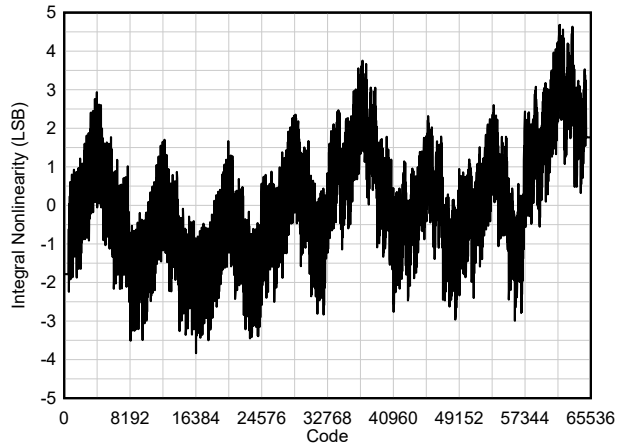

F_{IN} = 4.9 MHz

Figure 6-12. INL vs Code

6.9 Typical Characteristics - ADC3661 (continued)

Typical values at T_A = 25 °C, ADC sampling rate = 10 MSPS, A_{IN} = –1 dBFS differential input, AVDD = IOVDD = 1.8 V, external 1.6 V voltage reference, unless otherwise noted.

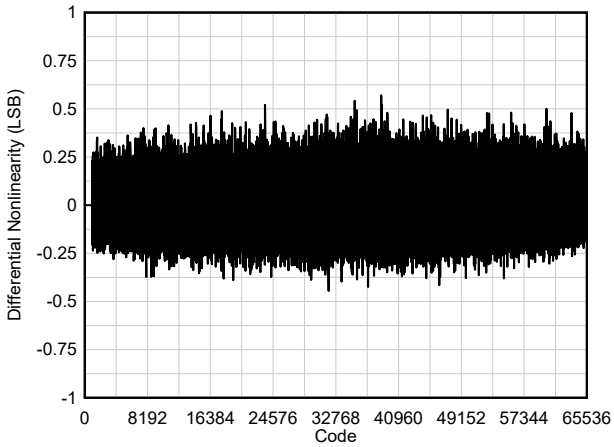

F_{IN} = 4.9 MHz

Figure 6-13. DNL vs Code

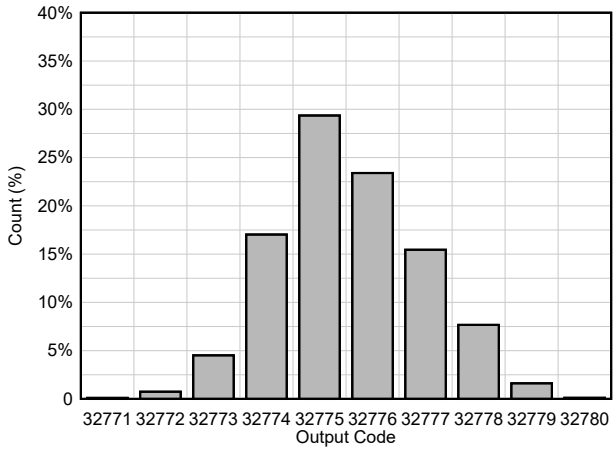

Figure 6-14. DC Offset Histogram

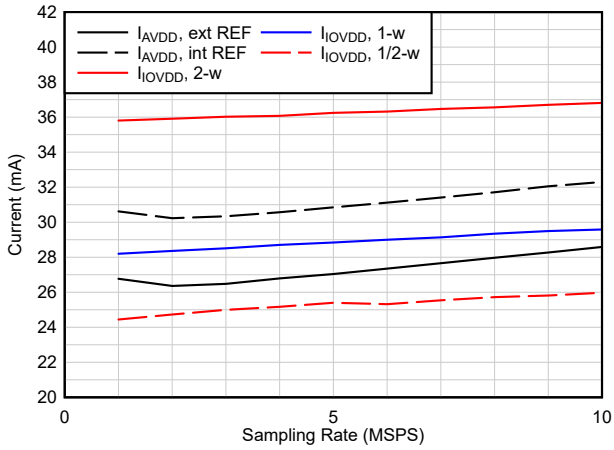

F_{IN} = 1.1 MHz, DDC Bypass

Figure 6-15. Current vs Sampling Rate

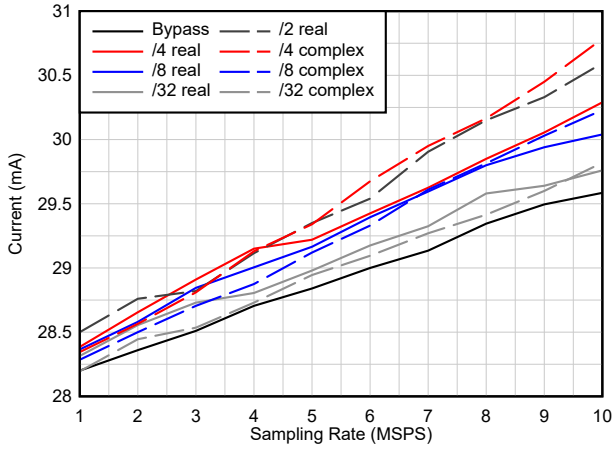

F_{IN} = 1.1 MHz, 1-wire

Figure 6-16. I_{IOVDD} Current vs Decimation

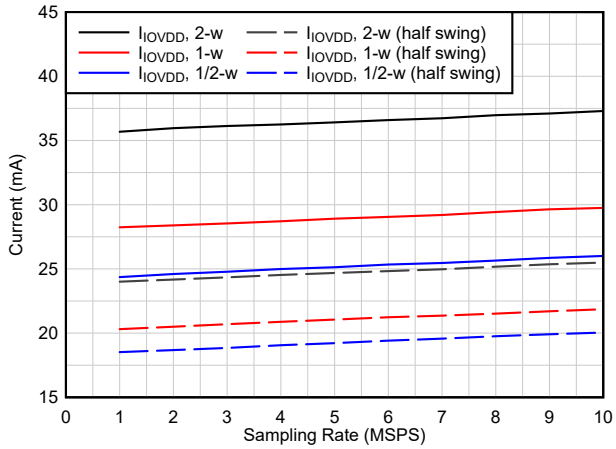

F_{IN} = 1.1 MHz, Complex Decimation by 32

Figure 6-17. I_{IOVDD} Current vs Interface

Copyright © 2022 Texas Instruments Incorporated

6.10 Typical Characteristics - ADC3662

Typical values at T_A = 25 °C, ADC sampling rate = 25 MSPS, A_{IN} = –1 dBFS differential input, AVDD = IOVDD = 1.8 V, external 1.6 V voltage reference, unless otherwise noted.

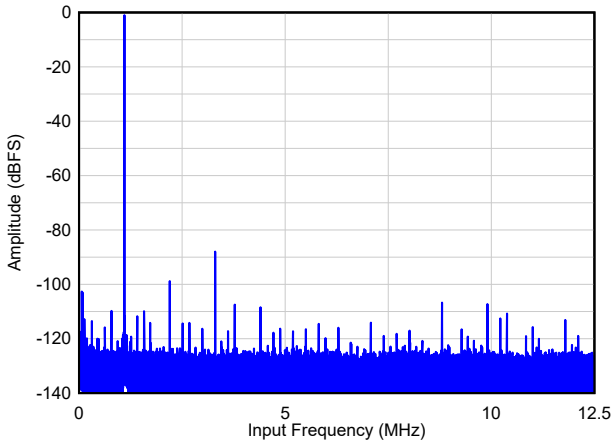

SNR = 82.1 dBFS, HD23 = 87 dBc, Non HD23 = 102 dBFS

Figure 6-18. Single Tone FFT at F_{IN} = 1 MHz

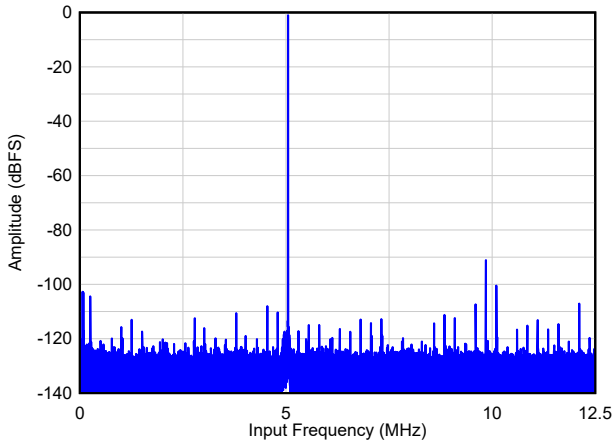

SNR = 82.0 dBFS, HD23 = 90 dBc, Non HD23 = 103 dBFS

Figure 6-19. Single Tone FFT at F_{IN} = 5 MHz

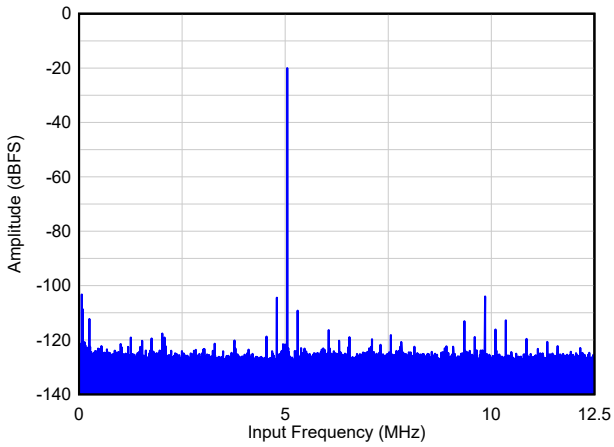

SNR = 82.5 dBFS, HD23 = 82 dBc, Non HD23 = 102 dBFS

Figure 6-20. Single Tone FFT at F_{IN} = 5 MHz, A_{IN} = -20 dBFS

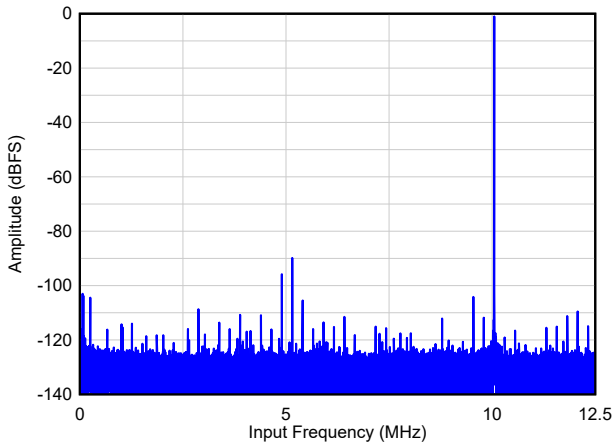

SNR = 81.8 dBFS, HD23 = 89 dBc, Non HD23 = 102 dBFS

Figure 6-21. Single Tone FFT at F_{IN} = 10 MHz

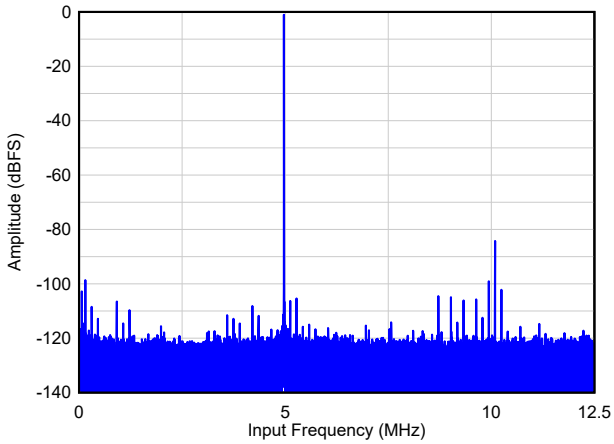

SNR = 81.7 dBFS, HD23 = 83 dBc, Non HD23 = 97 dBFS

Figure 6-22. Single Tone FFT at F_{IN} = 20 MHz

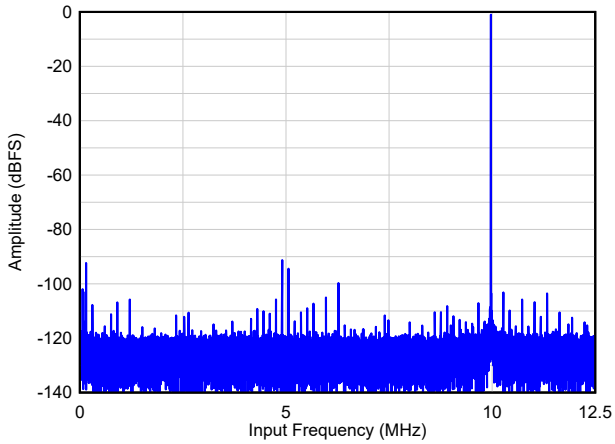

SNR = 78.5 dBFS, HD23 = 90 dBc, Non HD23 = 93 dBFS

Figure 6-23. Single Tone FFT at F_{IN} = 40 MHz

Copyright © 2022 Texas Instruments Incorporated

6.10 Typical Characteristics - ADC3662 (continued)

Typical values at T_A = 25 °C, ADC sampling rate = 25 MSPS, A_{IN} = –1 dBFS differential input, AVDD = IOVDD = 1.8 V, external 1.6 V voltage reference, unless otherwise noted.

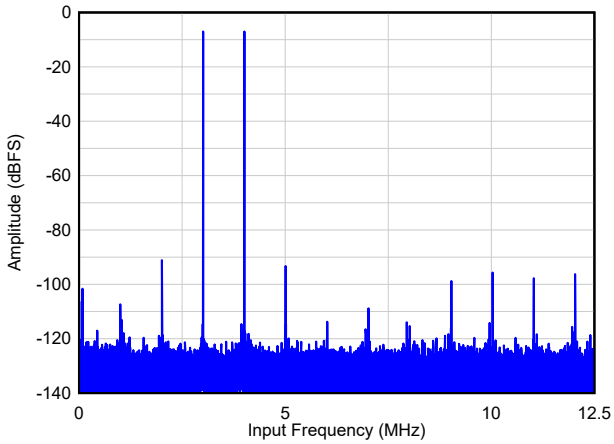

A_{IN} = -7 dBFS/tone, IMD3 = 85 dBc

Figure 6-24. Two Tone FFT at F_{IN} = 3/4 MHz

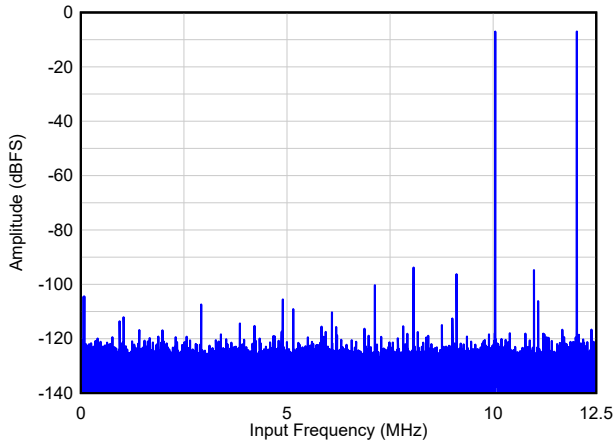

A_{IN} = -7 dBFS/tone, IMD3 = 86 dBc

Figure 6-25. Two Tone FFT at F_{IN} = 10/12 MHz

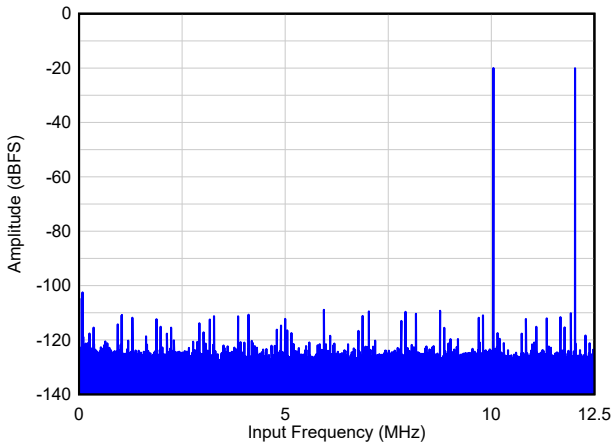

A_{IN} = -20 dBFS/tone, IMD3 = 88 dBc

Figure 6-26. Two Tone FFT at F_{IN} = 10/12 MHz

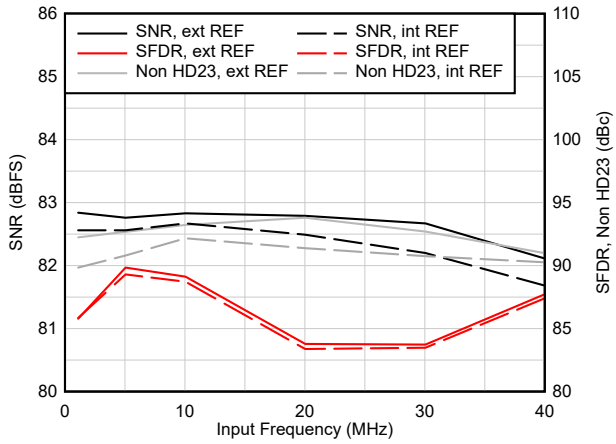

Figure 6-27. AC Performance vs Input Frequency

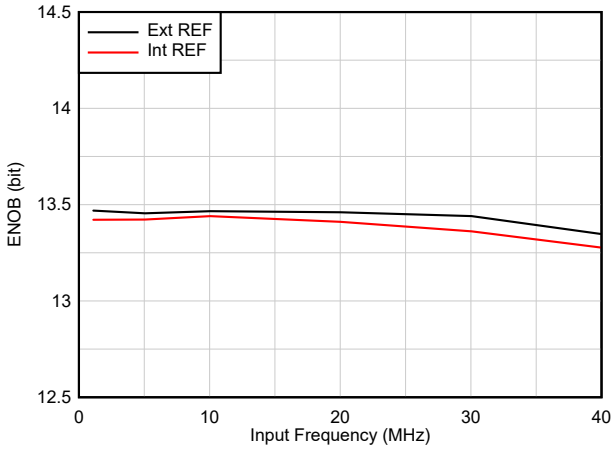

Figure 6-28. ENOB vs Input Frequency

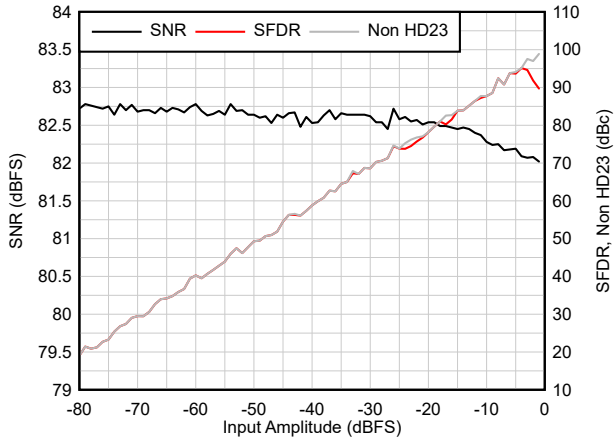

F_{IN} = 1.1 MHz

Figure 6-29. AC Performance vs Input Amplitude

Copyright © 2022 Texas Instruments Incorporated

6.10 Typical Characteristics - ADC3662 (continued)

Typical values at T_A = 25 °C, ADC sampling rate = 25 MSPS, A_{IN} = –1 dBFS differential input, AVDD = IOVDD = 1.8 V, external 1.6 V voltage reference, unless otherwise noted.

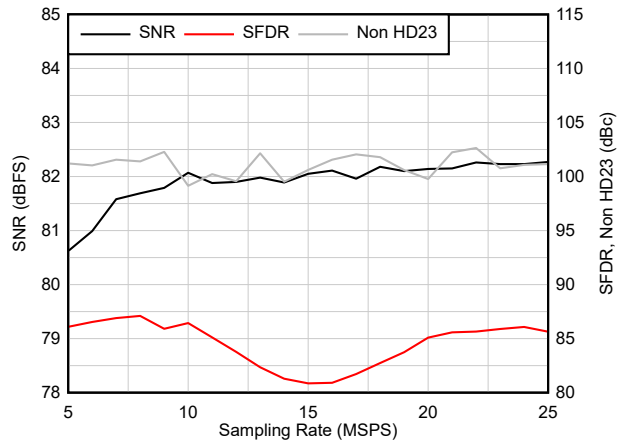

F_{IN} = 1.1 MHz

Figure 6-30. AC Performance vs Sampling Rate

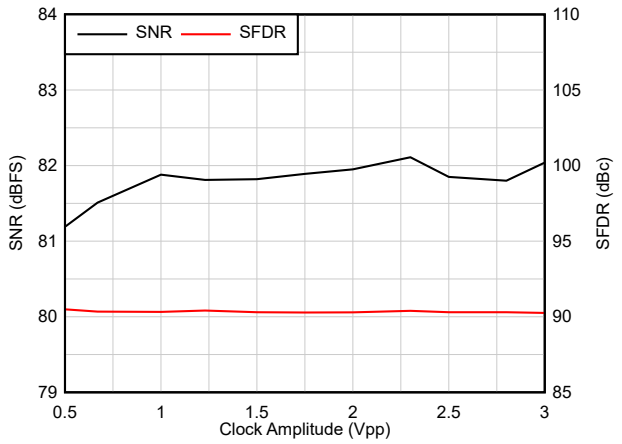

F_{IN} = 1.1 MHz

Figure 6-31. AC Performance vs Clock Amplitude

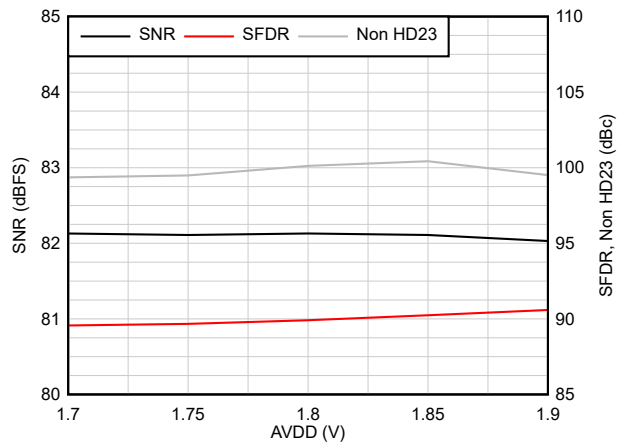

F_{IN} = 1.1 MHz

Figure 6-32. AC Performance vs AVDD

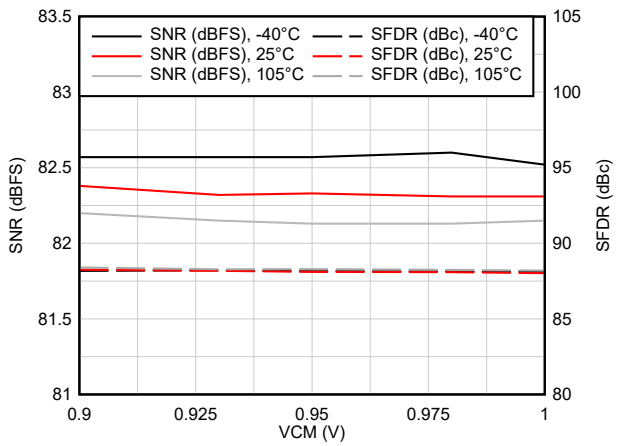

F_{IN} = 1.1 MHz

Figure 6-33. AC Performance vs VCM vs Temperature

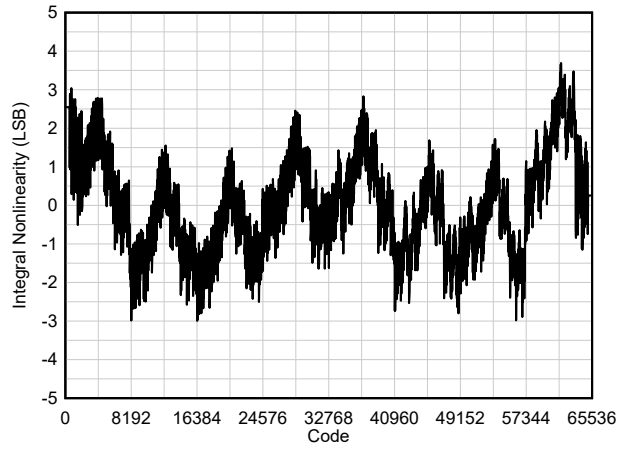

F_{IN} = 4.9 MHz

Figure 6-34. INL vs Code

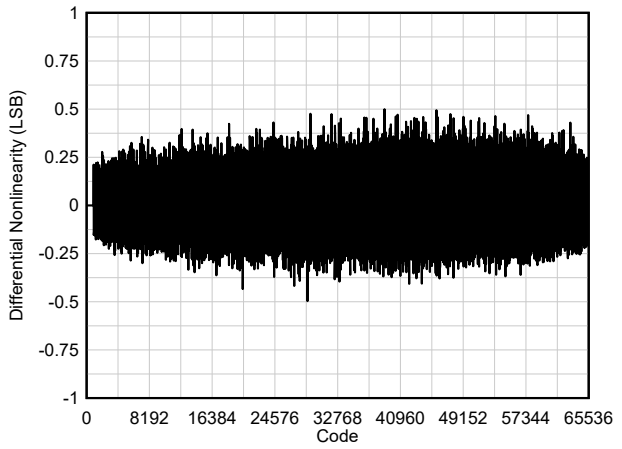

F_{IN} = 4.9 MHz

Figure 6-35. DNL vs Code

6.10 Typical Characteristics - ADC3662 (continued)

Typical values at T_A = 25 °C, ADC sampling rate = 25 MSPS, A_{IN} = –1 dBFS differential input, AVDD = IOVDD = 1.8 V, external 1.6 V voltage reference, unless otherwise noted.

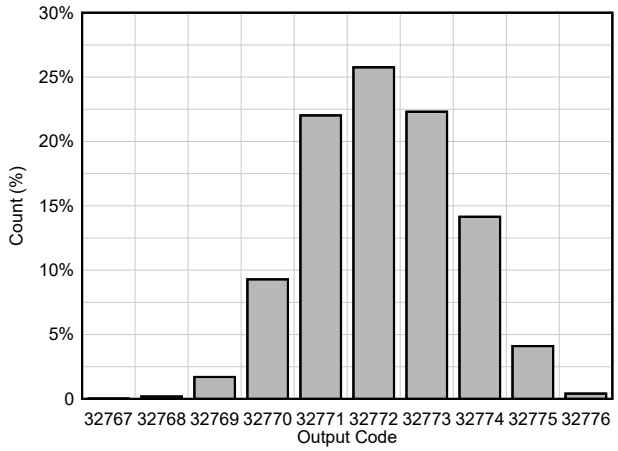

Figure 6-36. DC Offset Histogram

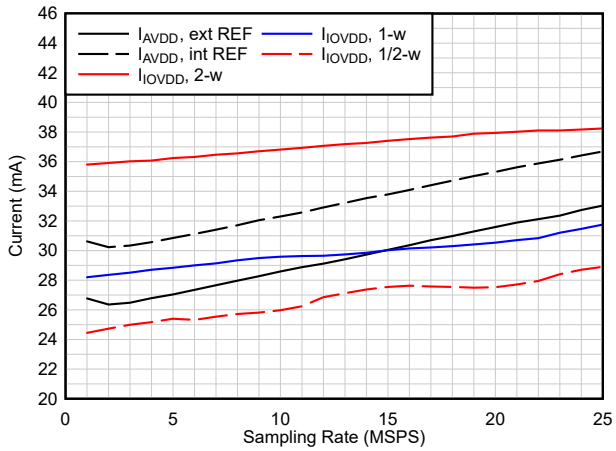

F_{IN} = 1.1 MHz, DDC Bypass

Figure 6-37. Current vs Sampling Rate

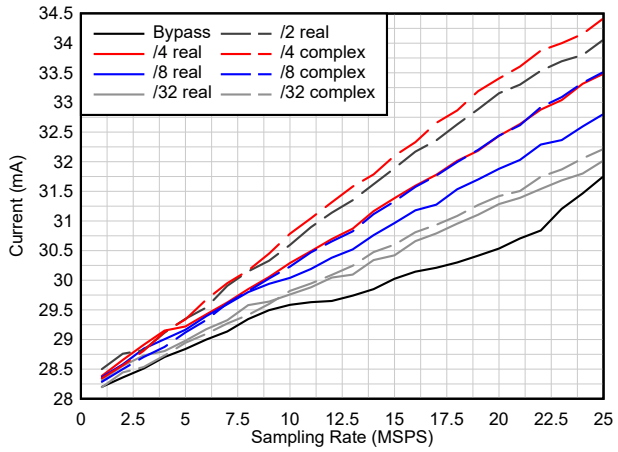

F_{IN} = 1.1 MHz, 1-wire

Figure 6-38. I_{IOVDD} Current vs Decimation

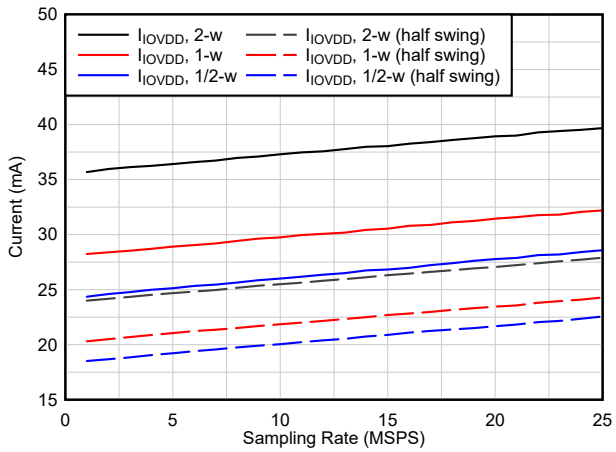

F_{IN} = 1.1 MHz, Complex Decimation by 32

Figure 6-39. I_{IOVDD} Current vs Interface

Copyright © 2022 Texas Instruments Incorporated

6.11 Typical Characteristics - ADC3663

Typical values at T_A = 25 °C, ADC sampling rate = 65 MSPS, A_{IN} = –1 dBFS differential input, AVDD = IOVDD = 1.8 V, external 1.6 V voltage reference, unless otherwise noted.

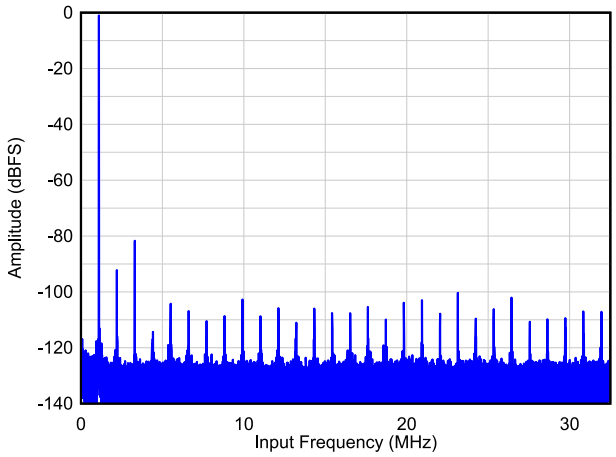

SNR = 82.0 dBFS, SFDR = 81 dBc, Non HD23 = 100 dBFS

Figure 6-40. Single Tone FFT at F_{IN} = 1 MHz

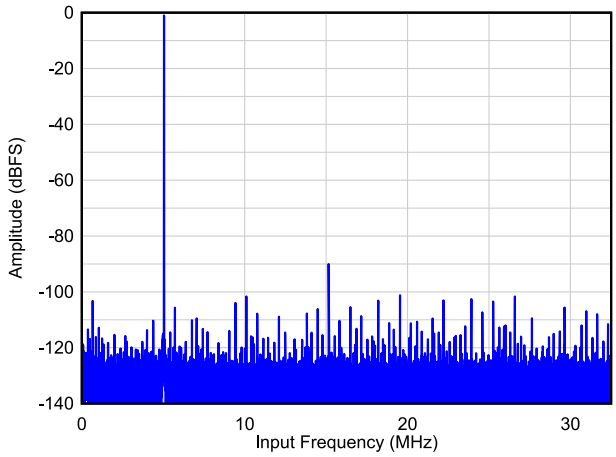

SNR = 82.0 dBFS, SFDR = 90 dBc, Non HD23 = 100 dBFS

Figure 6-41. Single Tone FFT at F_{IN} = 5 MHz

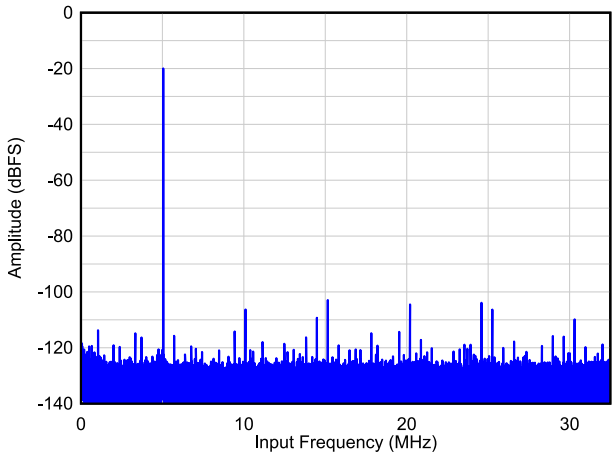

SNR = 82.0 dBFS, SFDR = 83 dBc, Non HD23 = 102 dBFS

Figure 6-42. Single Tone FFT at F_{IN} = 5 MHz, A_{IN} = -20 dBFS

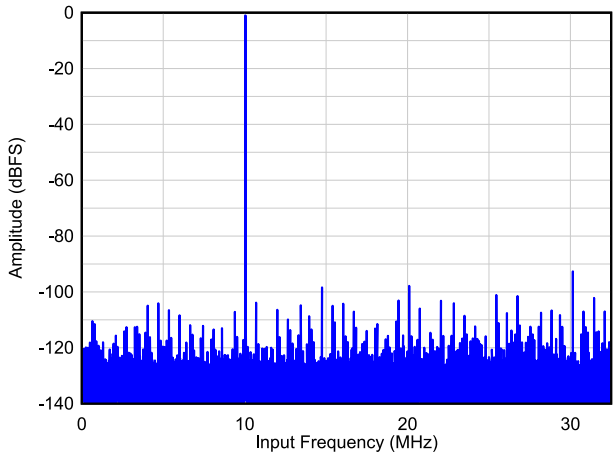

SNR = 82.0 dBFS, SFDR = 87 dBc, Non HD23 = 97 dBFS

Figure 6-43. Single Tone FFT at F_{IN} = 10 MHz

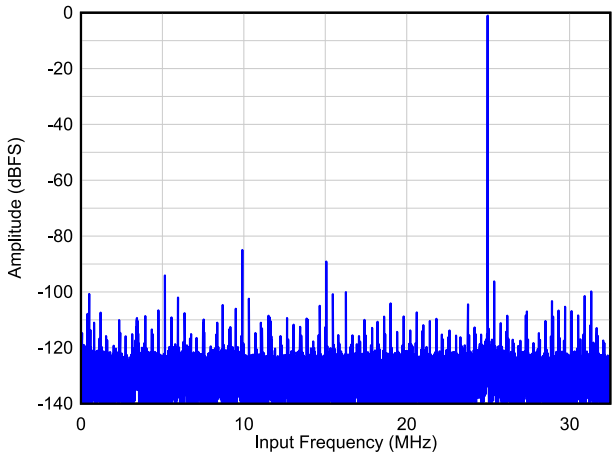

SNR = 82.0 dBFS, SFDR = 82 dBc, Non HD23 = 93 dBFS

Figure 6-44. Single Tone FFT at F_{IN} = 40 MHz

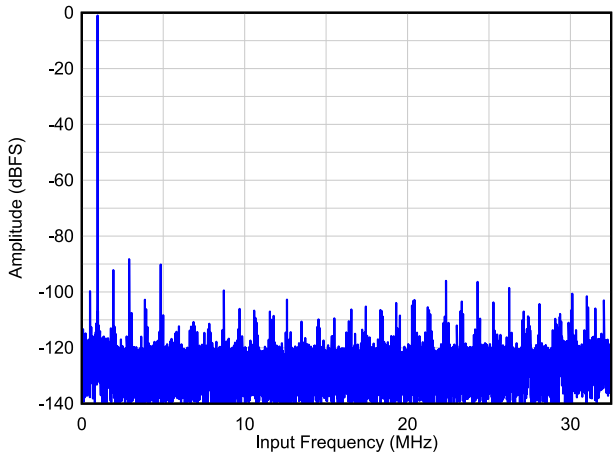

SNR = 82.0 dBFS, SFDR = 87 dBc, Non HD23 = 92 dBFS

Figure 6-45. Single Tone FFT at F_{IN} = 64 MHz

6.11 Typical Characteristics - ADC3663 (continued)

Typical values at T_A = 25 °C, ADC sampling rate = 65 MSPS, A_{IN} = –1 dBFS differential input, AVDD = IOVDD = 1.8 V, external 1.6 V voltage reference, unless otherwise noted.

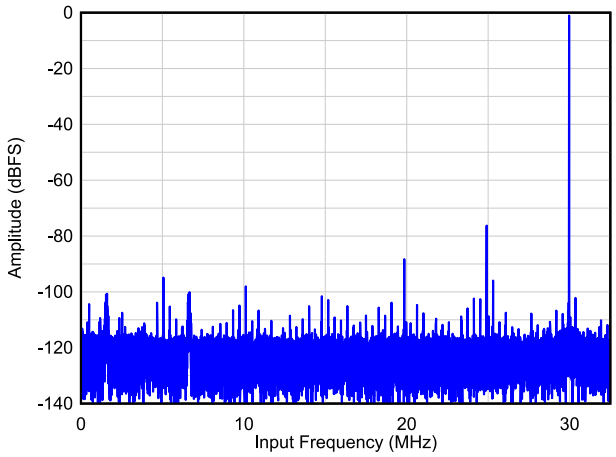

SNR = 82.0 dBFS, SFDR = 87 dBc, Non HD23 = 92 dBFS

Figure 6-46. Single Tone FFT at F_{IN} = 100 MHz

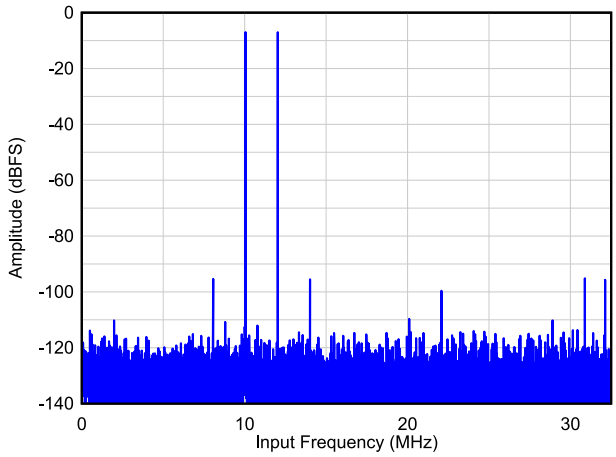

A_{IN} = -7 dBFS/tone, IMD3 =

Figure 6-47. Two Tone FFT at F_{IN} = 10/12 MHz

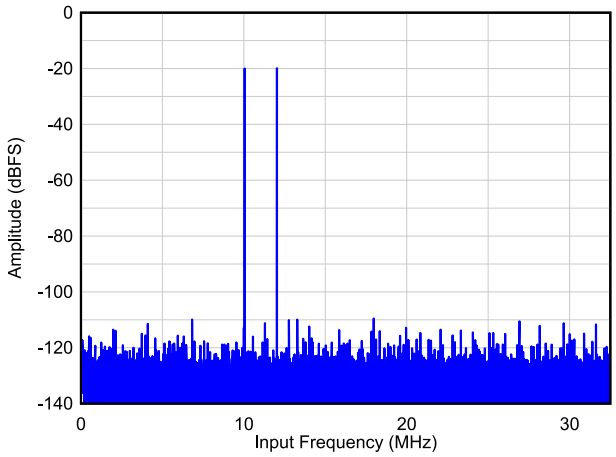

A_{IN} = -20 dBFS/tone, IMD3 =

Figure 6-48. Two Tone FFT at F_{IN} = 10/12 MHz

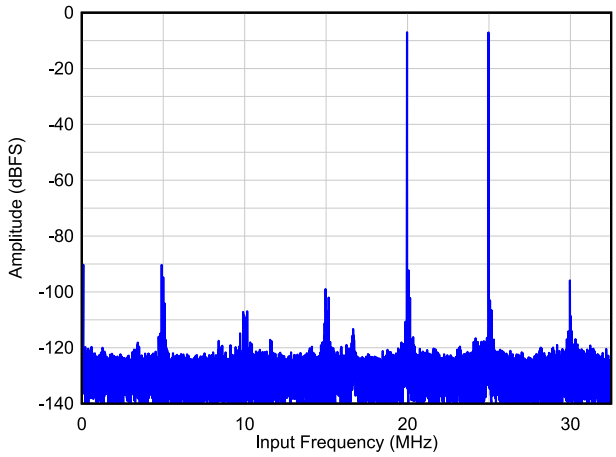

A_{IN} = -7 dBFS/tone, IMD3 =

Figure 6-49. Two Tone FFT at F_{IN} = 40/45 MHz

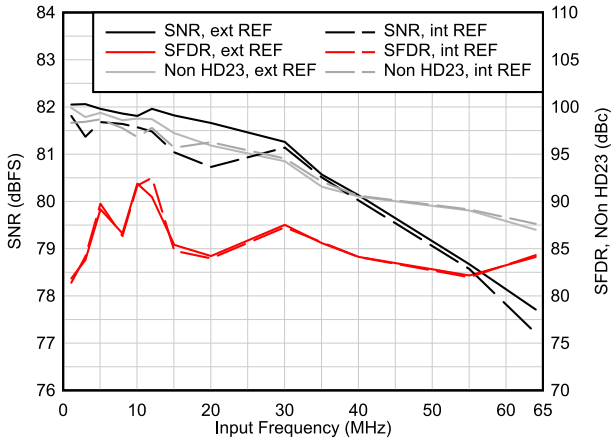

Figure 6-50. AC Performance vs Input Frequency

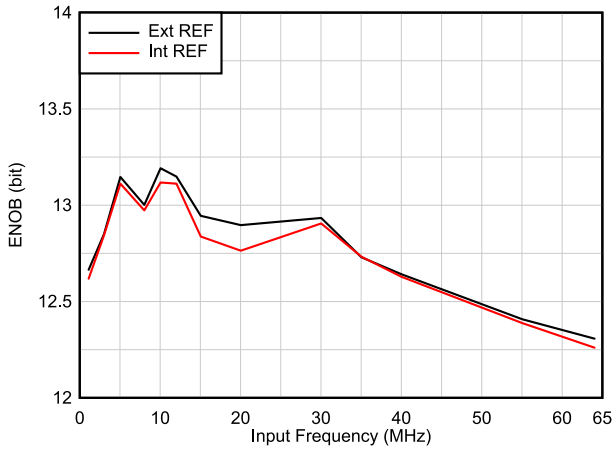

Figure 6-51. ENOB vs Input Frequency

Copyright © 2022 Texas Instruments Incorporated

6.11 Typical Characteristics - ADC3663 (continued)

Typical values at T_A = 25 °C, ADC sampling rate = 65 MSPS, A_{IN} = –1 dBFS differential input, AVDD = IOVDD = 1.8 V, external 1.6 V voltage reference, unless otherwise noted.

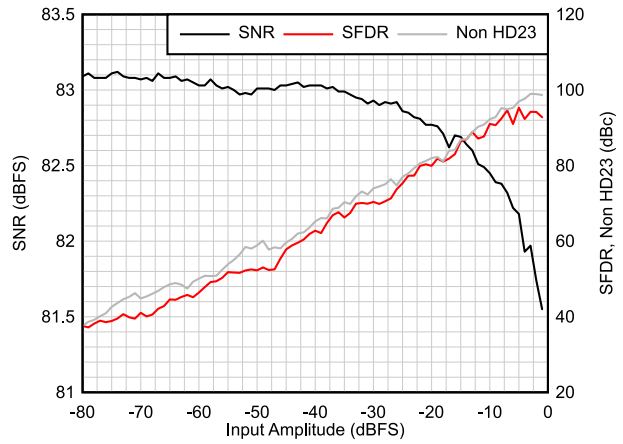

F_{IN} = 5 MHz

Figure 6-52. AC Performance vs Input Amplitude

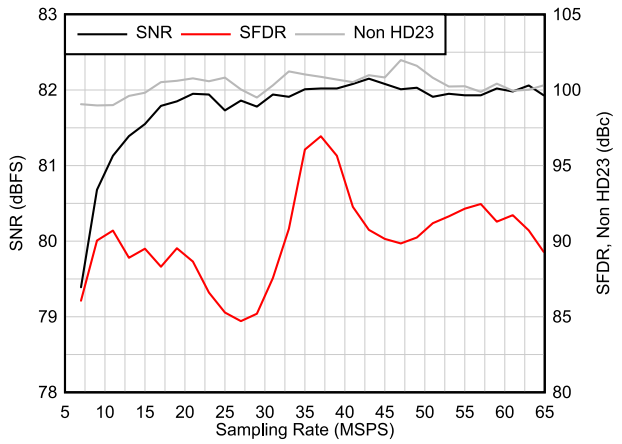

F_{IN} = 5 MHz

Figure 6-53. AC Performance vs Sampling Rate

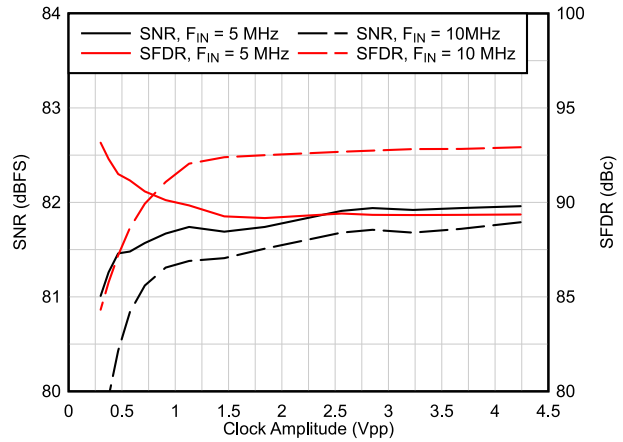

Figure 6-54. AC Performance vs Clock Amplitude

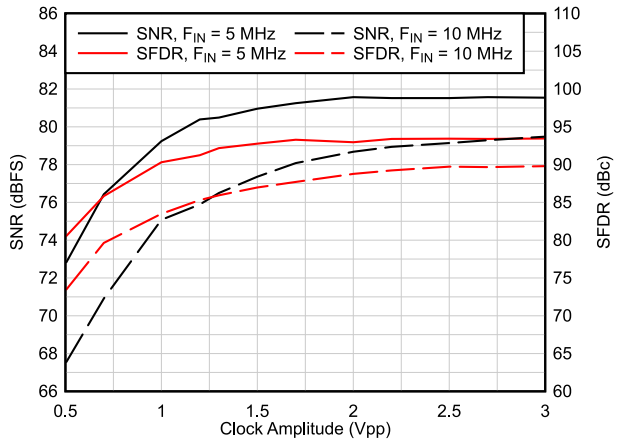

Single Ended Clock Input

Figure 6-55. AC Performance vs Clock Amplitude

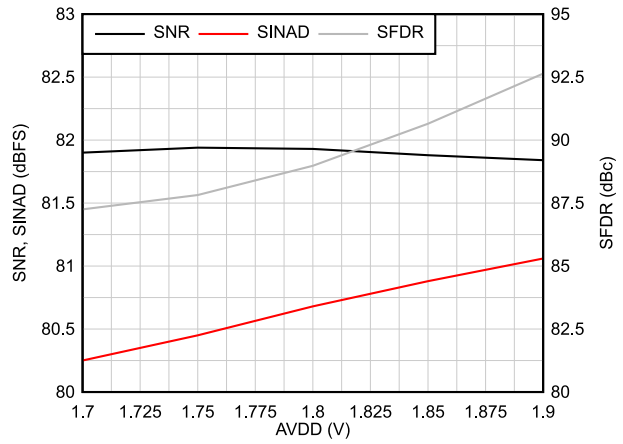

F_{IN} = 5 MHz

Figure 6-56. AC Performance vs AVDD

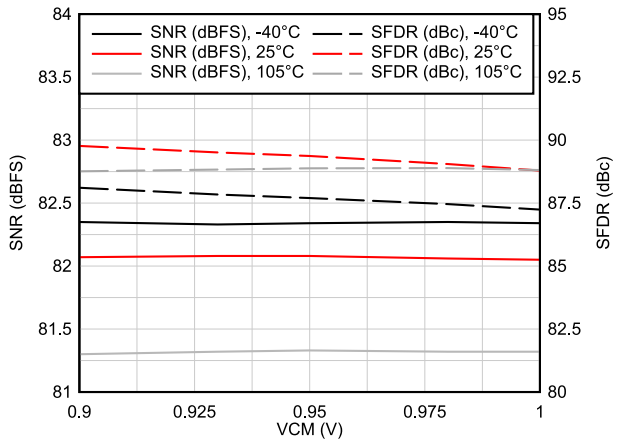

F_{IN} = 5 MHz

Figure 6-57. AC Performance vs VCM vs Temperature

6.11 Typical Characteristics - ADC3663 (continued)

Typical values at T_A = 25 °C, ADC sampling rate = 65 MSPS, A_{IN} = –1 dBFS differential input, AVDD = IOVDD = 1.8 V, external 1.6 V voltage reference, unless otherwise noted.

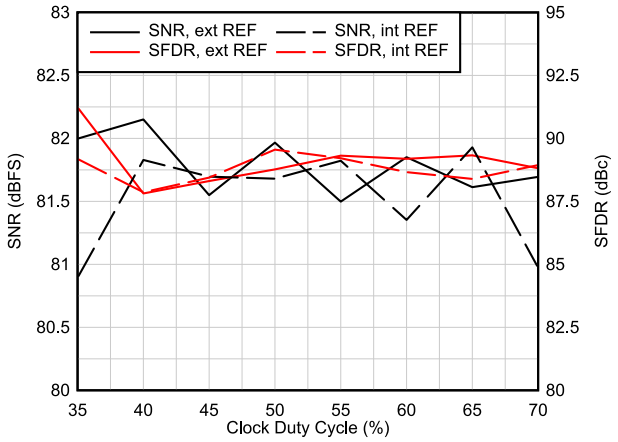

F_{IN} = 5 MHz

Figure 6-58. AC Performance vs Clock Duty Cycle

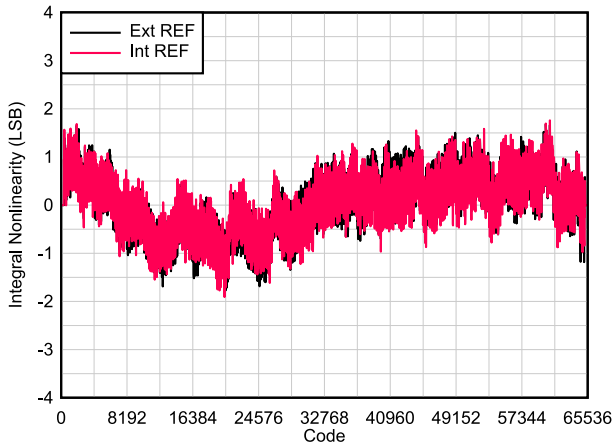

F_{IN} = 5 MHz

Figure 6-59. INL vs Code

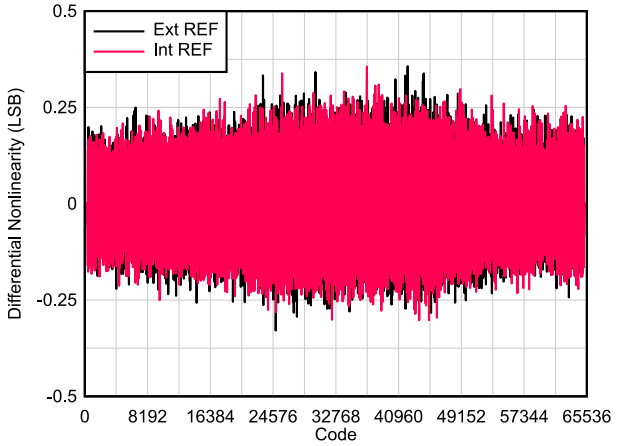

F_{IN} = 5 MHz

Figure 6-60. DNL vs Code

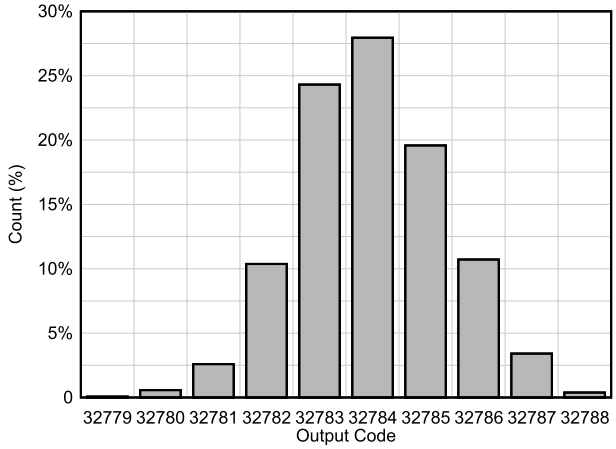

Figure 6-61. DC Offset Histogram

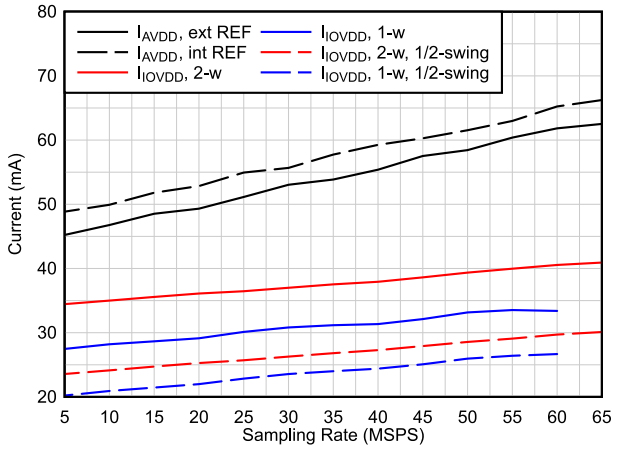

F_{IN} = 5 MHz, DDC Bypass

Figure 6-62. Current vs Sampling Rate

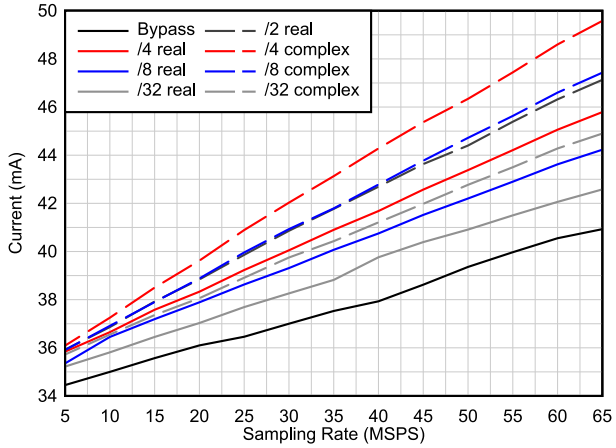

F_{IN} = 5 MHz, 2-wire

Figure 6-63. Current vs Decimation

Copyright © 2022 Texas Instruments Incorporated

6.11 Typical Characteristics - ADC3663 (continued)

Typical values at T_A = 25 °C, ADC sampling rate = 65 MSPS, A_{IN} = –1 dBFS differential input, AVDD = IOVDD = 1.8 V, external 1.6 V voltage reference, unless otherwise noted.

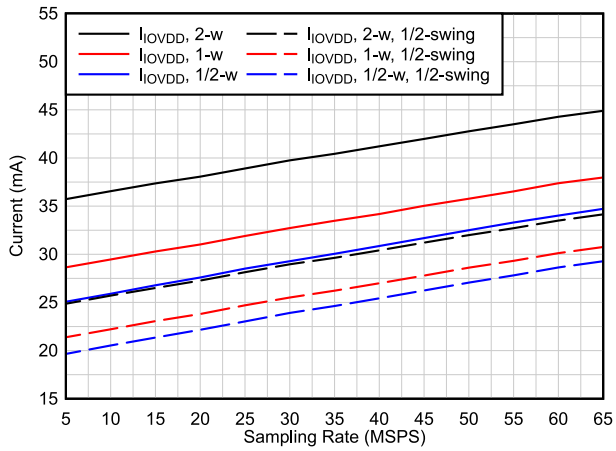

F_{IN} = 5 MHz, Complex Decimation by 32

Figure 6-64. Current vs Output Interface

7 Parameter Measurement Information

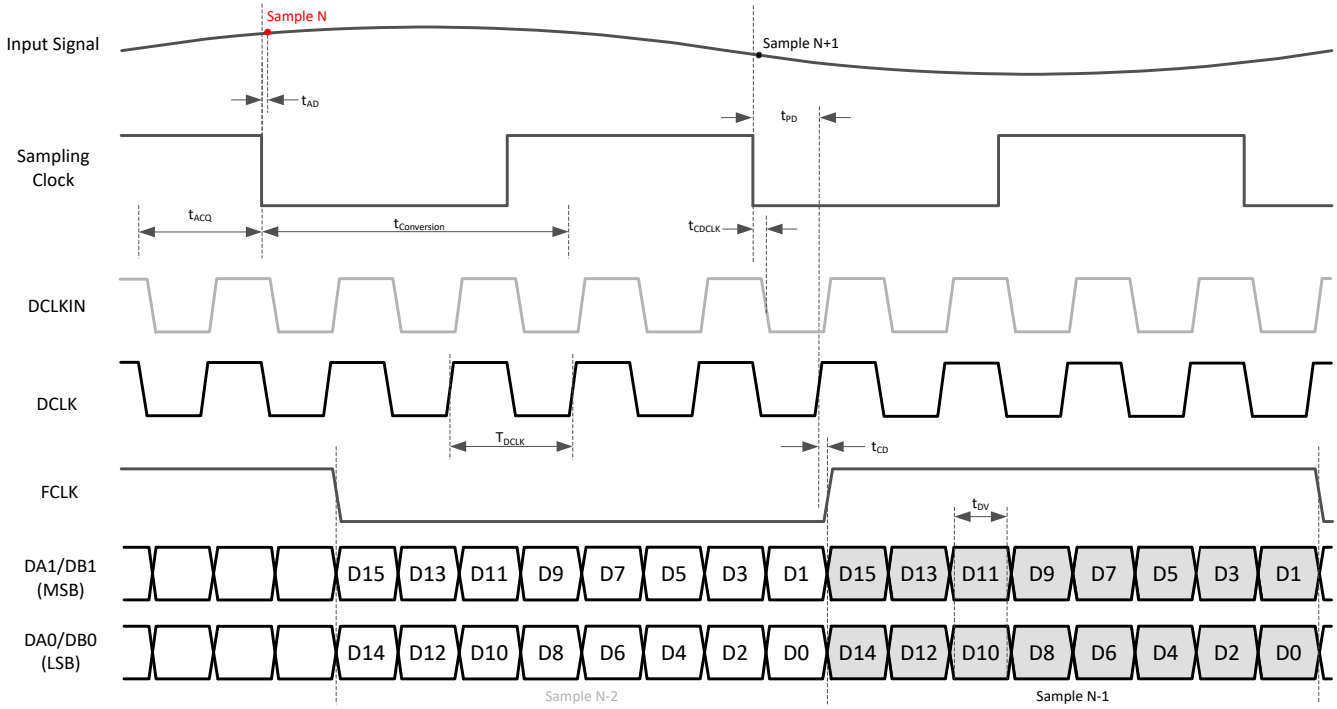

Figure 7-1. Timing diagram: 2-wire SLVDS (default output bit mapper)

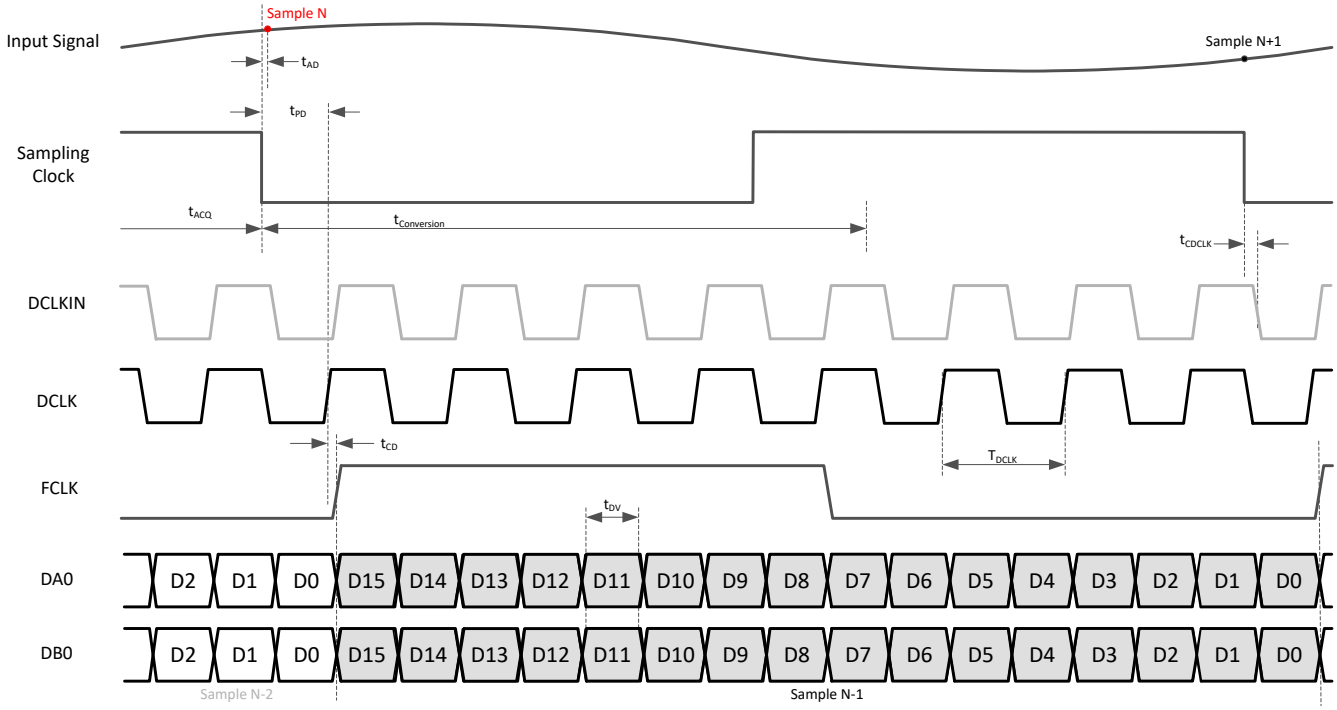

Figure 7-2. Timing diagram: 1-wire SLVDS (default output bit mapper)

Copyright © 2022 Texas Instruments Incorporated

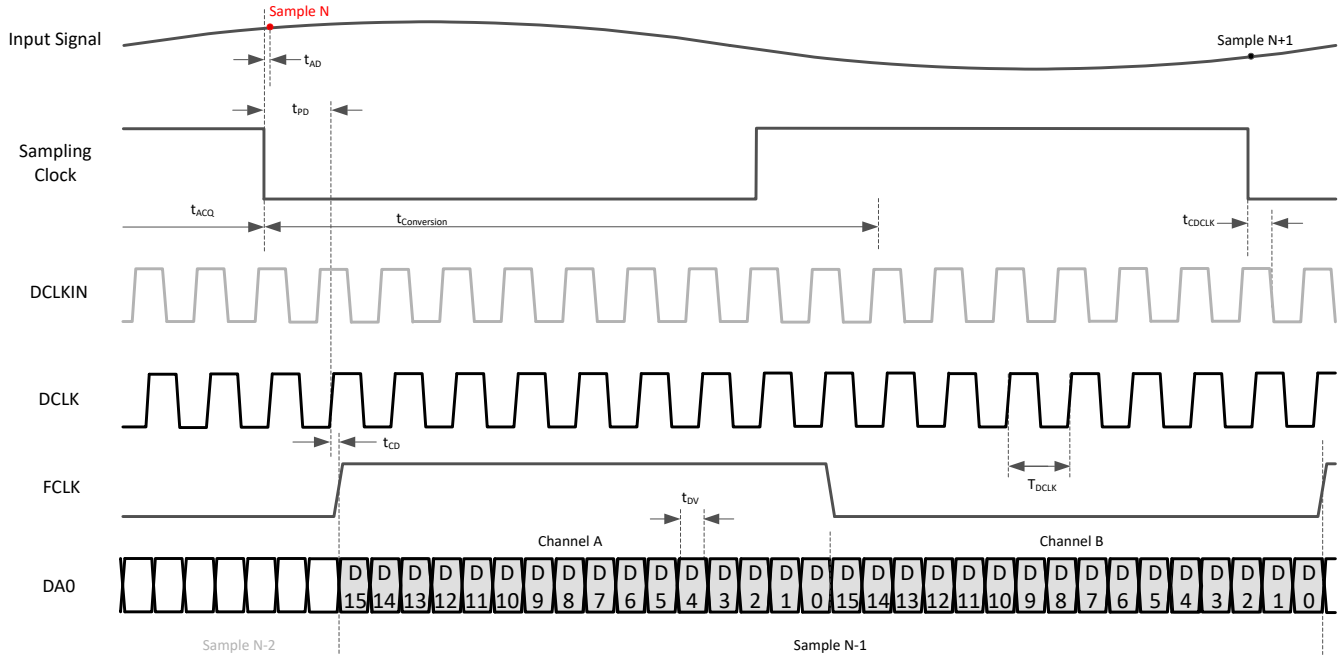

Figure 7-3. Timing diagram:1/2-wire SLVDS (default output bit mapper)

8 Detailed Description

8.1 Overview

The ADC366x is a low noise, ultra-low power 16-bit high-speed dual channel ADC supporting sampling rates up to 65 Msps. It offers very good DC precision together with IF sampling support which makes it ideally suited for a wide range of applications. The ADC366x is equipped with an on-chip internal reference option but it also supports the use of an external, high precision 1.6 V voltage reference or an external 1.2 V reference which is buffered and gained up internally. Because of the inherent low latency architecture, the digital output result is available after only one to two clock cycles. Single ended as well as differential input signaling is supported.

An optional programmable digital down converter enables external anti-alias filter relaxation as well as output data rate reduction. The digital filter provides a 32-bit programmable NCO and supports both real or complex decimation.

The ADC366x uses a serial LVDS (SLVDS) interface to output the data which minimizes the number of digital interconnects. The device supports a two-lane (2-wire), a one-lane (1-wire) and a half-lane (1/2-wire) option. The ADC366x includes a digital output formatter which supports output resolutions from 14 to 20-bit.

The device features and control options can be set up either through pin configurations or via SPI register writes.

8.2 Functional Block Diagram

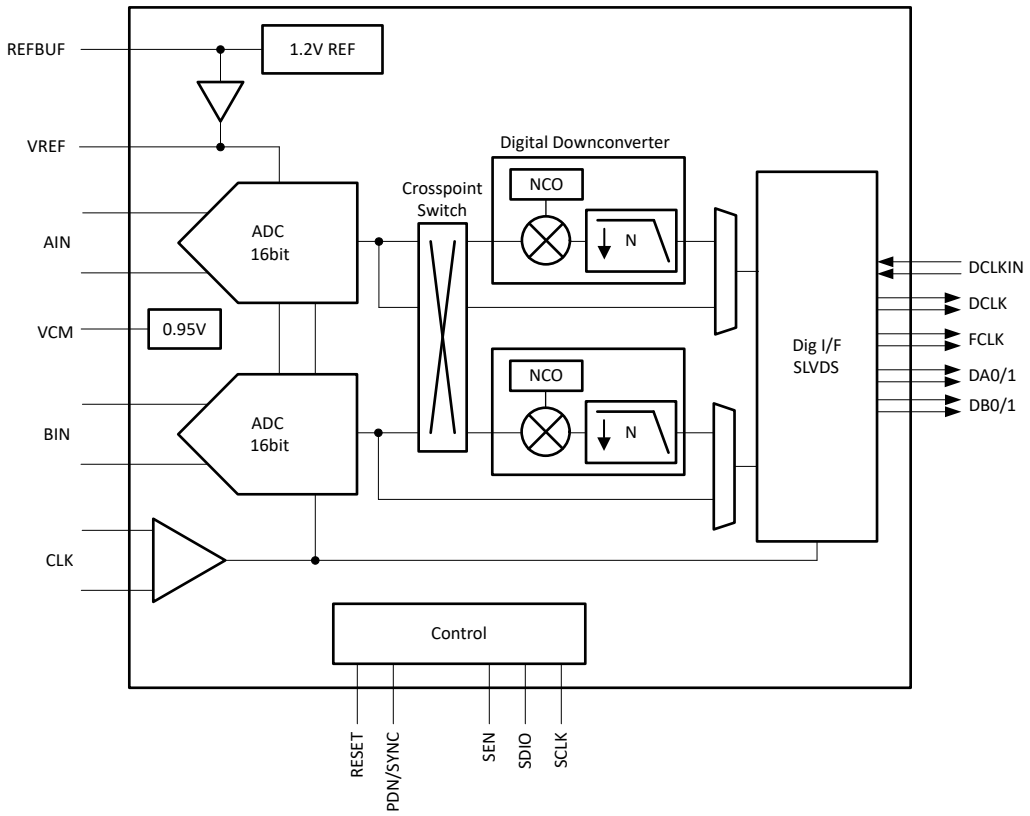

Copyright © 2022 Texas Instruments Incorporated

8.3 Feature Description

8.3.1 Analog Input

The analog inputs of ADC366x are intended to be driven differentially. Both AC coupling and DC coupling of the analog inputs is supported. The analog inputs are designed for an input common mode voltage of 0.95 V which must be provided externally on each input pin. DC-coupled input signals must have a common mode voltage that meets the device input common mode voltage range.

The equivalent input network diagram is shown in Figure 8-1. All four sampling switches, with on-resistance shown in red, are in same position (open or closed) simultaneously.

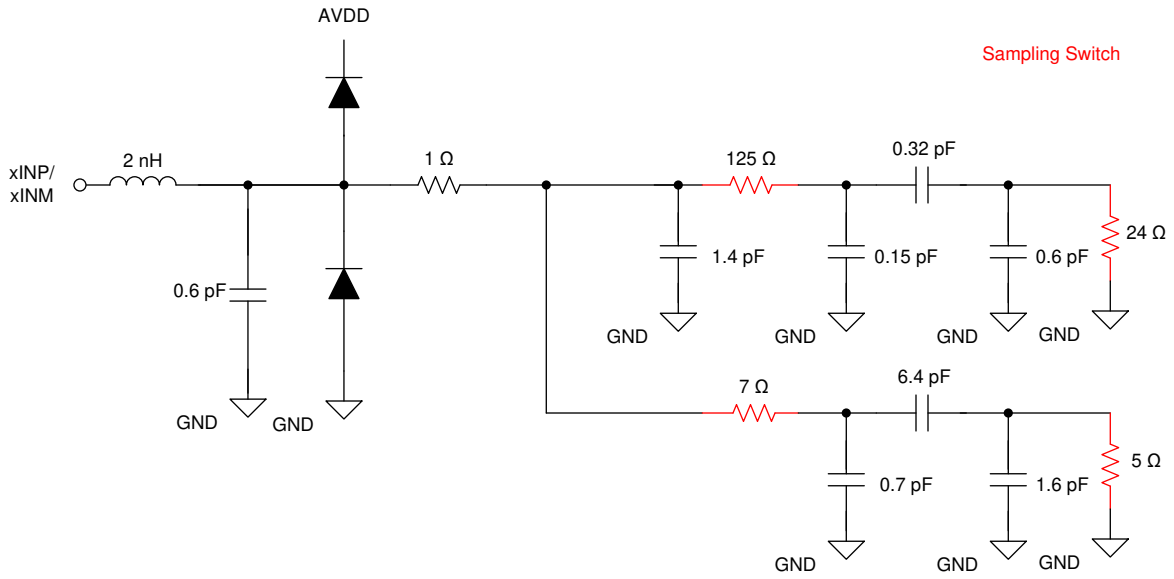

Figure 8-1. Equivalent Input Network

8.3.1.1 Analog Input Bandwidth

Figure 8-2 shows the analog full power input bandwidth of the ADC366x with a 50 Ω differential termination. The -3 dB bandwidth is approximately 900 MHz and the useful input bandwidth with good AC performance is approximately 120 MHz.

The equivalent differential input resistance R_{IN} and input capacitance C_{IN} vs frequency are shown in Figure 8-3.

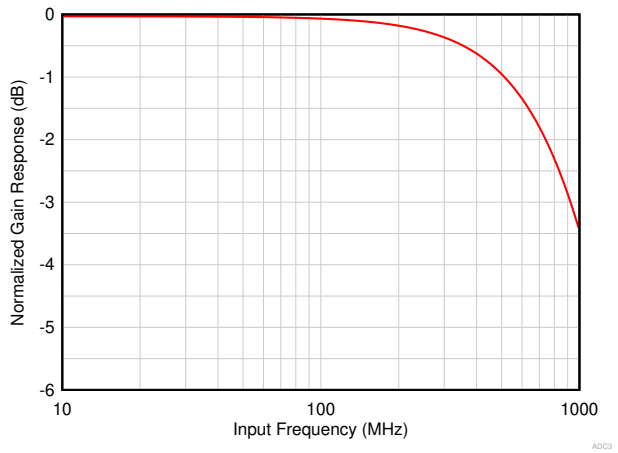

Figure 8-2. ADC Analog Input bandwidth response

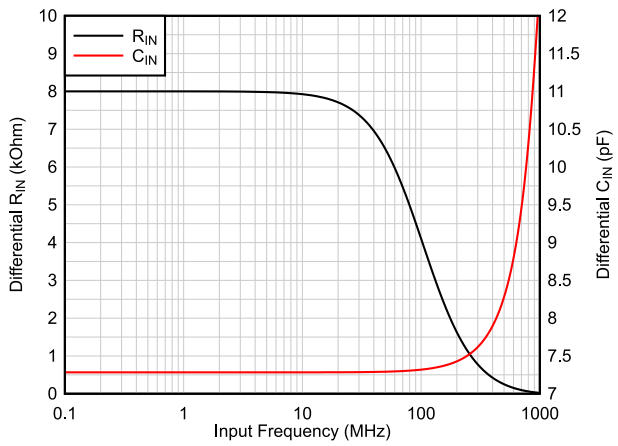

Figure 8-3. Equivant R_{IN}, C_{IN} vs Input Frequency

8.3.1.2 Analog Front End Design

The ADC366x is an unbuffered ADC and thus a passive kick-back filter is recommended to absorb the glitch from the sampling operation. Depending on if the input is driven by a balun or a differential amplifier with low output impedance, a termination network may be needed. Additionally a passive DC bias circuit is needed in AC-coupled applications which can be combined with the termination network.

8.3.1.2.1 Sampling Glitch Filter Design

The front end sampling glitch filter is designed to optimize the SNR and HD3 performance of the ADC. The filter performance is dependent on input frequency and therefore the following filter designs are recommended for different input frequency ranges as shown in Figure 8-4 and Figure 8-5.

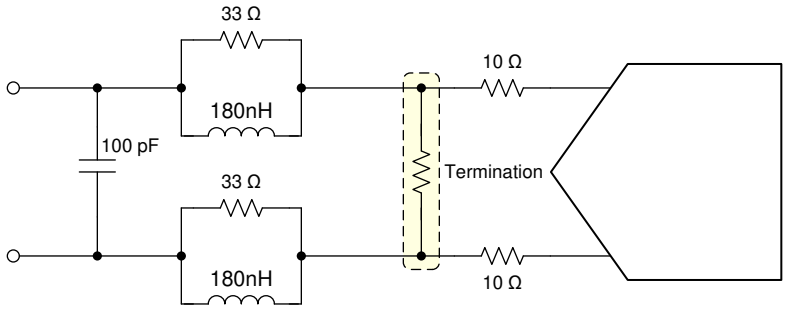

Figure 8-4. Sampling glitch filter example for input frequencies from DC to 30 MHz

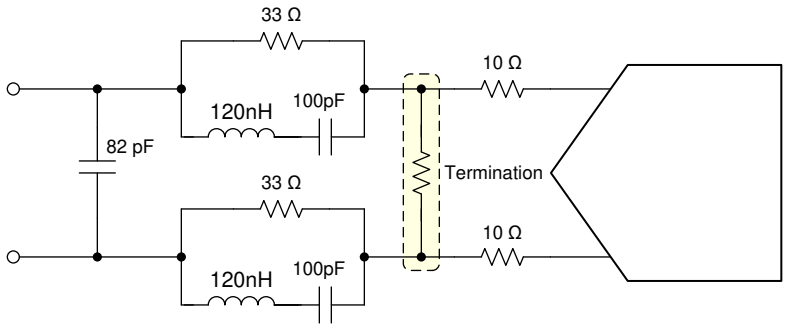

Figure 8-5. Sampling glitch filter example for input frequencies from 30 to 70 MHz

Copyright © 2022 Texas Instruments Incorporated

8.3.1.2.2 Analog Input Termination and DC Bias

Depending on the input drive circuitry, a termination network and/or DC biasing needs to be provided.

8.3.1.2.2.1 AC-Coupling

The ADC366x requires external DC bias using the common mode output voltage (VCM) of the ADC together with the termination network as shown in Figure 8-6. The termination is located within the glitch filter network. When using a balun on the input, the termination impedance has to be adjusted to account for the turns ratio of the transformer. When using an amplifier, the termination impedance can be adjusted to optimize the amplifier performance.

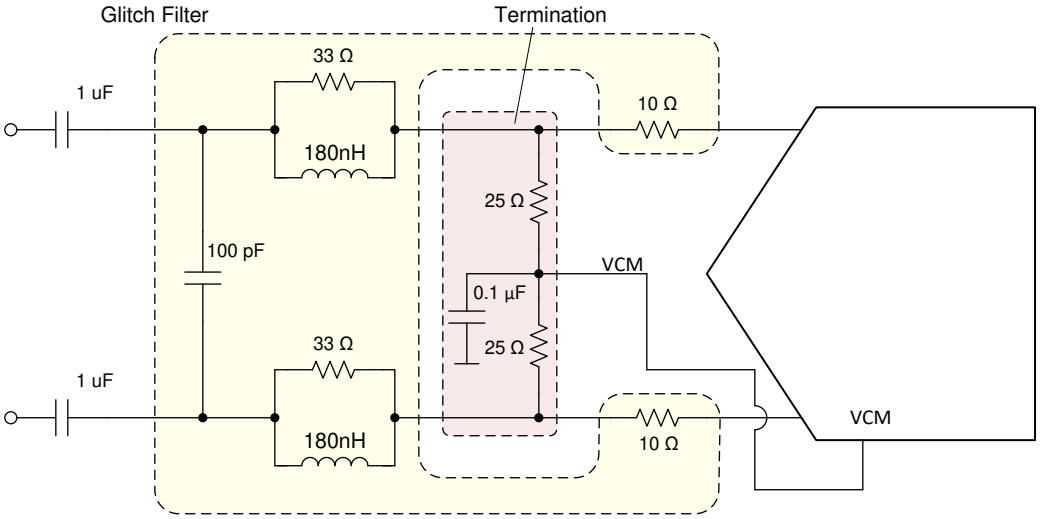

Figure 8-6. AC-Coupling: termination network provides DC bias (glitch filter example for DC - 30 MHz)

8.3.1.2.2.2 DC-Coupling

In DC coupled applications the DC bias needs to be provided from the fully differential amplifier (FDA) using VCM output of the ADC as shown in Figure 8-7. The glitch filter in this case is located between the anti-alias filter and the ADC. No termination may be needed if amplifier is located close to the ADC or if the termination is part of the anti-alias filter.

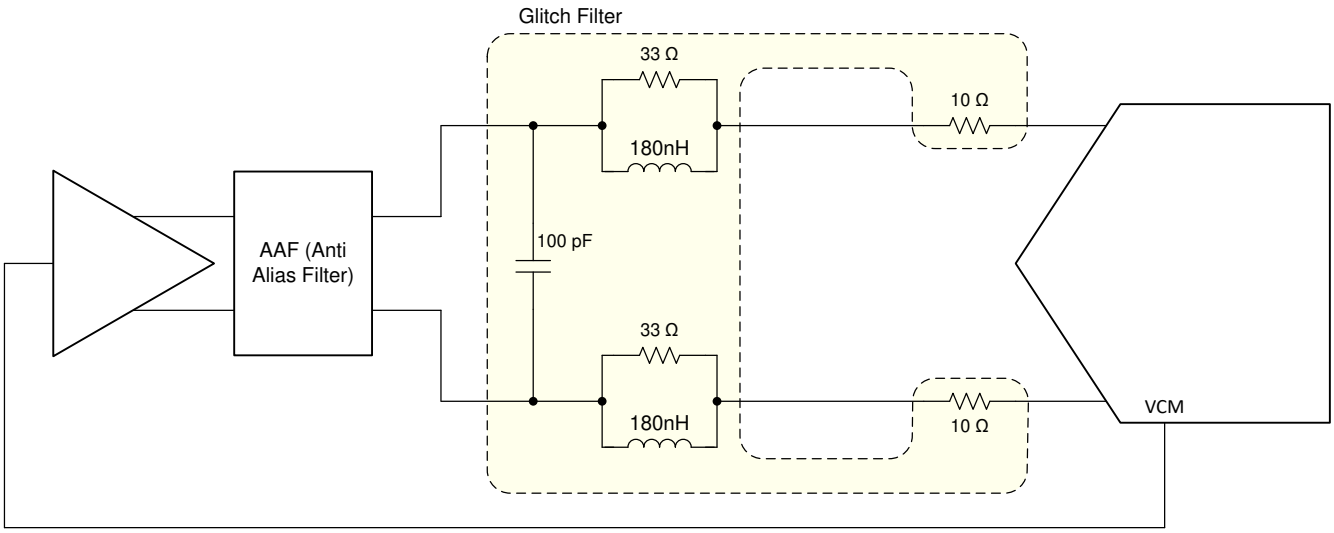

Figure 8-7. DC-Coupling: DC bias provided by FDA (glitch filter example for DC - 30 MHz)

8.3.1.3 Auto-Zero Feature

The ADC366x includes an internal auto-zero front end amplifier circuit which improves the 1/f flicker noise. This auto-zero feature is enabled by default for the ADC3661/2 and can be enabled using SPI register writes for the ADC3663 (register 0x11, D0). The 4M point FFTs below show the autozero feature enabled vs disabled.

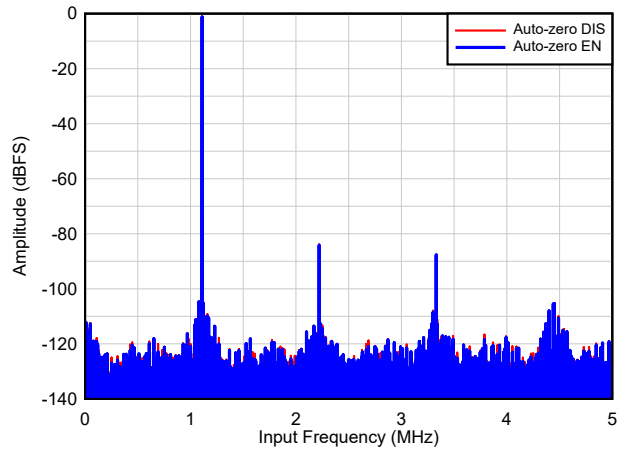

Figure 8-8. F_S = 10 MSPS, F_{IN} = 1.1 MHz

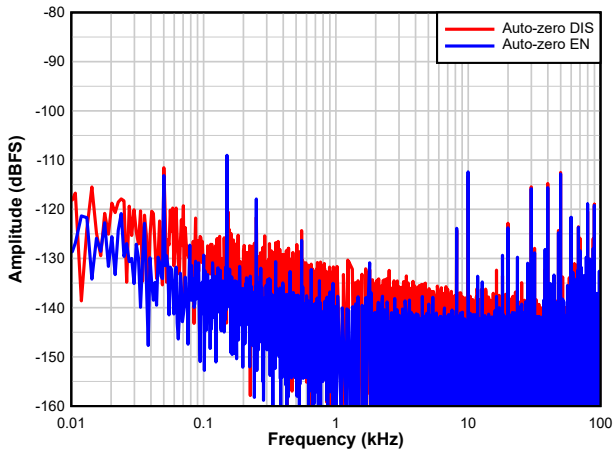

Figure 8-9. F_S = 10 MSPS, F_{IN} = 1.1 MHz

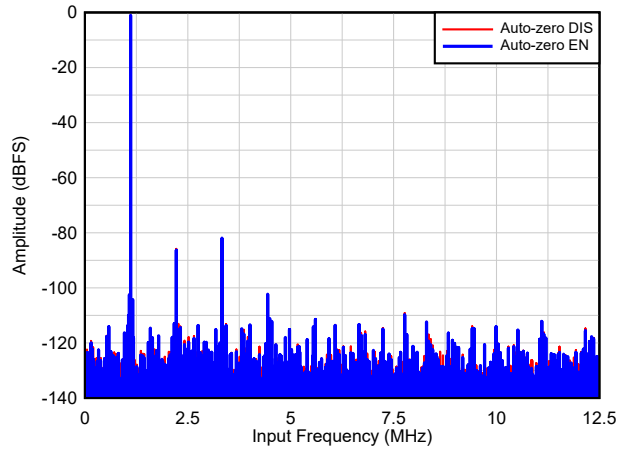

Figure 8-10. F_S = 25 MSPS, F_{IN} = 1.1 MHz

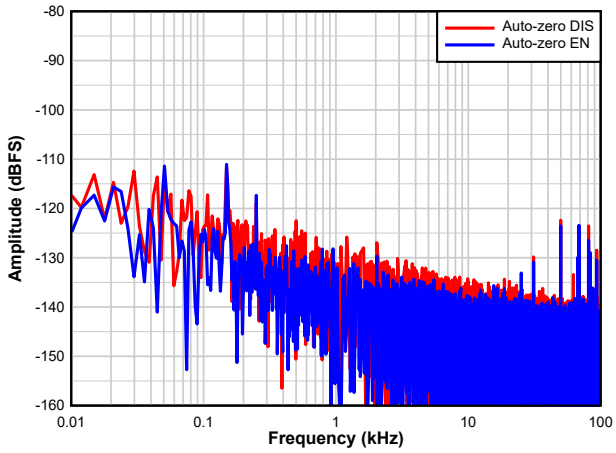

Figure 8-11. F_S = 25 MSPS, F_{IN} = 1.1 MHz

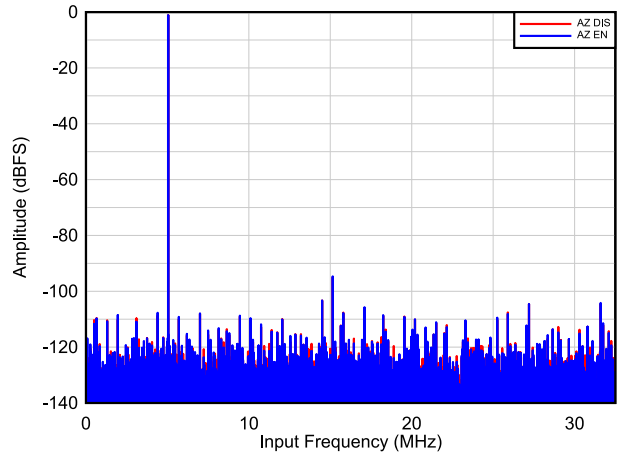

Figure 8-12. F_S = 65 MSPS, F_{IN} = 5 MHz

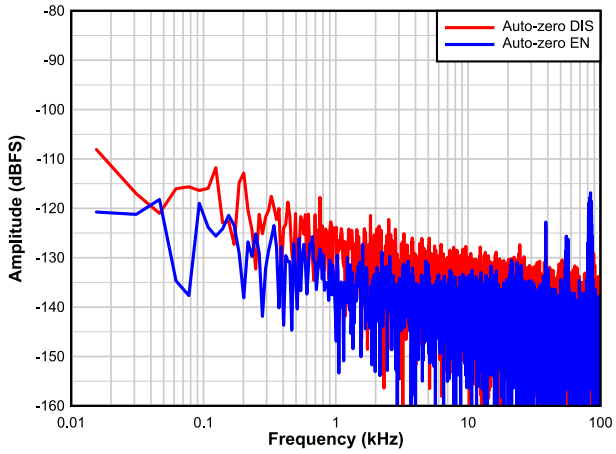

Figure 8-13. F_S = 65 MSPS, F_{IN} = 5 MHz

Copyright © 2022 Texas Instruments Incorporated

8.3.2 Clock Input

In order to maximize the ADC SNR performance, the external sampling clock should be low jitter and differential signaling with a high slew rate. This is especially important in IF sampling applications (Figure 8-14 and Figure 8-15). For less jitter sensitive applications, the ADC368x provides the option to operate with single ended signaling which saves additional power consumption.

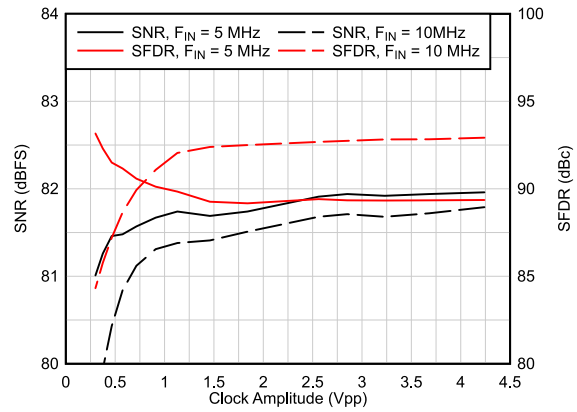

Figure 8-14. AC Performance vs Clock Amplitude (Differential Clock Input)

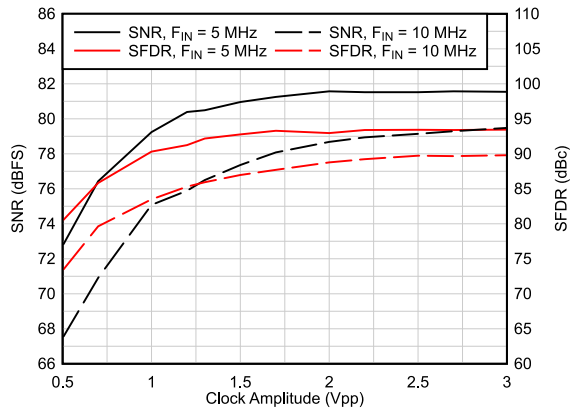

Figure 8-15. AC Performance vs Clock Amplitude (Single Ended Clock Input)

8.3.2.1 Single Ended vs Differential Clock Input

The ADC366x can be operated using a differential or a single ended clock input where the single ended clock consumes less power consumption. However clock amplitude impacts the ADC aperture jitter and consequently the SNR. For maximum SNR performance, a large clock signal with fast slew rates needs to be provided.

- Differential Clock Input: The clock input can be AC coupled externally. The ADC366x provides internal bias.
- Single Ended Clock Input: This mode needs to be configured using SPI register (0x0E, D2 and D0) or with the REFBUF pin. In this mode there is no internal clock biasing and thus the clock input needs to be DC coupled around a 0.9V center. The unused input needs to be AC coupled to ground.

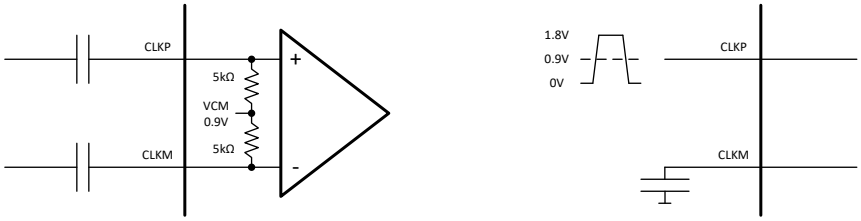

Figure 8-16. External and internal connection using differential (left) and single ended (right) clock input

8.3.2.2 Signal Acquisition Time Adjust

The ADC366x includes a register (DLL PDN (0x11, D2) which increases the signal acquisition time window for clock rates below 40 MSPS from 25% to 50% of the clock period. Increasing the sampling time provides a longer time for the driving amplifier to settle out the signal which can improve the SNR performance of the system. This register should only be used for the 65 MSPS speed grade (ADC3663) For the 10 and 25 MSPS device speed grades the sampling time is already set to $T_S/2$. When powering down the DLL, the acquisition time will track the clock duty cycle (50% is recommended).

Table 8-1. Acquisition time vs DLL PDN setting

SAMPLING CLOCK F_S (MSPS)	DLL PDN (0x11, D2)	ACQUISITION TIME (t_{ACQ})
65	0	T_S / 4
≤ 40	1	T_S / 2

8.3.3 Voltage Reference

The ADC366x provides three different options for supplying the voltage reference to the ADC. An external 1.6 V reference can be directly connected to the VREF input; a voltage 1.2 V reference can be connected to the REFBUF input using the internal gain buffer or the internal 1.2 V reference can be enabled to generate a 1.6 V reference voltage. For best performance, the reference noise should be filtered by connecting a 10 uF and a 0.1 uF ceramic bypass capacitor to the VREF pin. The internal reference circuitry of the ADC366x is shown in Figure 8-17.

Note

The voltage reference mode can be selected using SPI writes or by using the REFBUF pin (default) as a control pin (Configuration using PINs only). If the REFBUF pin is not used for configuration, the REFBUF pin should be connected to AVDD (even though the REFBUF pin has a weak internal pullup to AVDD) and the voltage reference option has to be selected using the SPI interface.

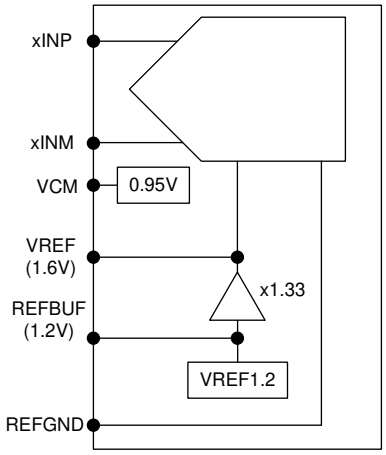

Figure 8-17. Different voltage reference options for ADC366x

8.3.3.1 Internal voltage reference

The 1.6 V reference for the ADC can be generated internal using the on-chip 1.2V reference along with the internal gain buffer. A 10 uF and a 0.1 uF ceramic bypass capacitor (C_{VREF}) should be connected between the VREF and REFGND pins as close to the pins as possible.

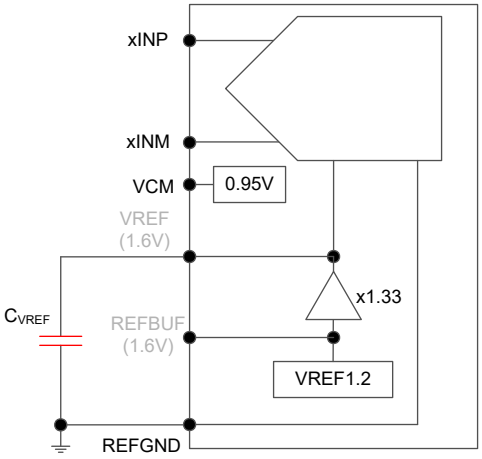

Figure 8-18. Internal reference

Copyright © 2022 Texas Instruments Incorporated

8.3.3.2 External voltage reference (VREF)

For highest accuracy and lowest temperature drift, the VREF input can be directly connected to an external 1.6 V reference. A 10 uF and a 0.1 uF ceramic bypass capacitor (C_{VREF}) connected between the VREF and REFGND pins and placed as close to the pins as possible is recommended. The load current from the external reference is about 1 mA.
Note: The internal reference is also used for other functions inside the device, therefore the reference amplifier should only be powered down in power down state but not during normal operation.

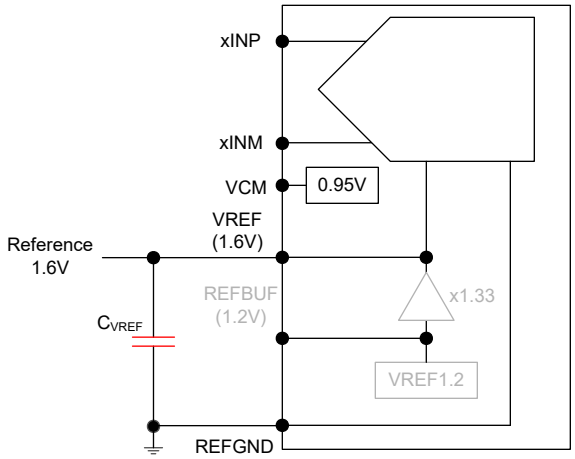

Figure 8-19. External 1.6V reference

8.3.3.3 External voltage reference with internal buffer (REFBUF)

The ADC366x is equipped with an on-chip reference buffer that also includes gain to generate the 1.6 V reference voltage from an external 1.2 V reference. A 10 uF and a 0.1 uF ceramic bypass capacitor (C_{VREF}) between the VREF and REFGND pins and a 10 uF and a 0.1 uF ceramic bypass capacitor between the REFBUF and REFGND pins are recommended. Both capacitors should be placed as close to the pins as possible. The load current from the external reference is less than 100 uA.

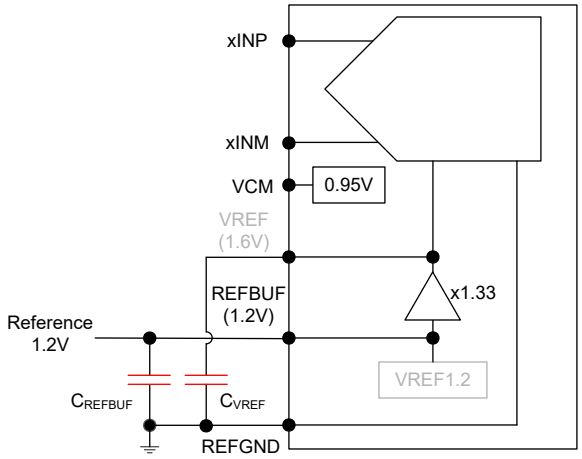

Figure 8-20. External 1.2V reference using internal reference buffer

8.3.4 Digital Down Converter

The ADC366x includes an optional on-chip digital down conversion (DDC) decimation filter that can be enabled via SPI register settings. It supports complex decimation by 2, 4, 8, 16 and 32 using a digital mixer and a 32-bit numerically controlled oscillator (NCO) as shown in Figure 8-21. Furthermore it supports a mode with real decimation where the complex mixer is bypassed (NCO should be set to 0 for lowest power consumption) and the digital filter acts as a low pass filter.

Internally the decimation filter calculations are performed with a 20-bit resolution in order to avoid any SNR degradation due to quantization noise. The Output Formatter truncates to the selected resolution prior to outputting the data on the digital interface.

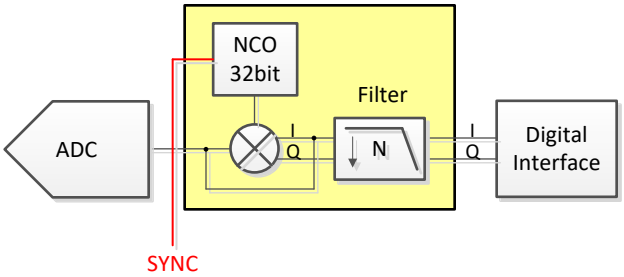

Figure 8-21. Internal Digital Decimation Filter

8.3.4.1 DDC MUX

The ADC366x family contains a MUX in front of the digital decimation filter which allows the ADC channel A input to be connected to the DDC of channel B and vice versa.

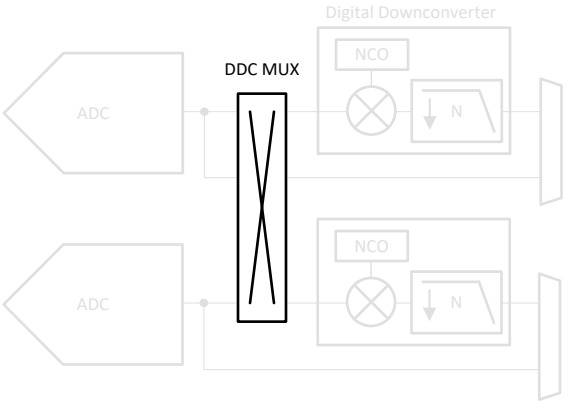

Figure 8-22. DDC MUX

Copyright © 2022 Texas Instruments Incorporated

8.3.4.2 Digital Filter Operation

The complex decimation operation is illustrated with an example in Figure 8-23. First the input signal (and the negative image) are frequency shifted by the NCO frequency as shown on the left. Next a digital filter is applied (centered around 0 Hz) and the output data rate is decimated - in this example the output data rate $F_{S,OUT}$ = F_S/8 with a Nyquist zone of F_S/16. During the complex mixing the spectrum (signal and noise) is split into real and complex parts and thus the amplitude is reduced by 6-dB. In order to compensate this loss, there is a 6-dB digital gain option in the decimation filter block that can be enabled via SPI write.

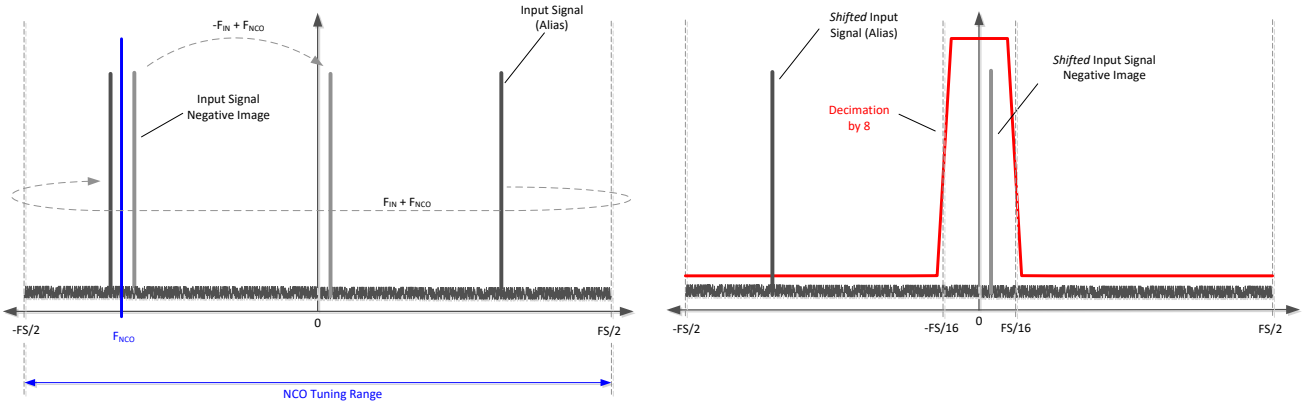

Figure 8-23. Complex decimation illustration

The real decimation operation is illustrated with an example in Figure 8-24. There is no frequency shift happening and only the real portion of the complex digital filter is exercised. The output data rate is decimated - a decimation of 8 would result in an output data rate $F_{S,OUT}$ = F_S/8 with a Nyquist zone of F_S/16.

During the real mixing the spectrum (signal and noise) amplitude is reduced by 3-dB. In order to compensate this loss, there is a 3-dB digital gain option in the decimation filter block that can be enabled via SPI write.

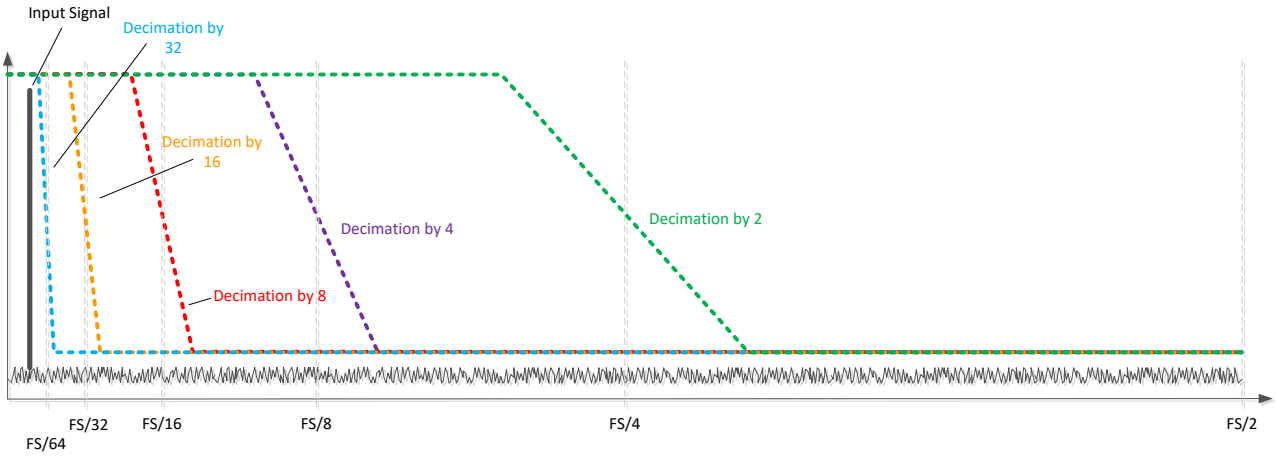

Figure 8-24. Real decimation illustration

8.3.4.3 FS/4 Mixing with Real Output

In this mode, the output after complex decimation gets mixed with FS/4 (FS = output data rate in this case). Instead of a complex output with the input signal centered around 0 Hz, the output is transmitted as a real output at twice the data rate and the signal is centered around FS/4 (Fout/4) as illustrated in Figure 8-25.

In this example, complex decimation by 8 is used. The output data is transmitted as a real output with an output rate of Fout = FS'/4 (FS' = ADC sampling rate). The input signal is now centered around FS/4 (Fout/4) or FS'/16.

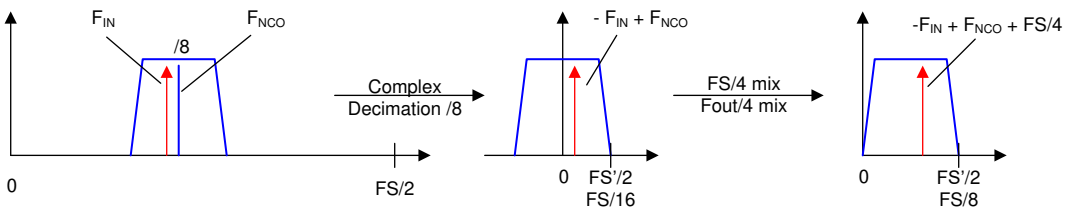

Figure 8-25. FS/4 Mixing with real output

8.3.4.4 Numerically Controlled Oscillator (NCO) and Digital Mixer

The decimation block is equipped with a 32-bit NCO and a digital mixer to fine tune the frequency placement prior to the digital filtering. The oscillator generates a complex exponential sequence of:

$$e^{j\omega n} \text{ (default) or } e^{-j\omega n} \quad (1)$$

where: frequency (ω) is specified as a signed number by the 32-bit register setting

The complex exponential sequence is multiplied with the real input from the ADC to mix the desired carrier to a frequency equal to $f_{IN} + f_{NCO}$. The NCO frequency can be tuned from $-F_S/2$ to $+F_S/2$ and is processed as a signed, 2s complement number. After programming a new NCO frequency, the MIXER RESTART register bit or SYNC pin has to be toggled for the new frequency to get active. Additionally the ADC366x provides the option via SPI to invert the mixer phase.

The NCO frequency setting is set by the 32-bit register value given and calculated as:

NCO frequency = 0 to + $F_S/2$: NCO = $f_{NCO} \times 2^{32} / F_S$

NCO frequency = $-F_S/2$ to 0: NCO = $(f_{NCO} + F_S) \times 2^{32} / F_S$

where:

- NCO = NCO register setting (decimal value)
- f_{NCO} = Desired NCO frequency (MHz)
- F_S = ADC sampling rate (MSPS)

The NCO programming is further illustrated with this example:

- ADC sampling rate F_S = 65 MSPS
- Input signal f_{IN} = 10 MHz
- Desired output frequency f_{OUT} = 0 MHz

For this example there are actually four ways to program the NCO and achieve the desired output frequency as shown in Table 8-2.

Table 8-2. NCO value calculations example

Alias or negative image	f_{NCO}	NCO Value	Mixer Phase	Frequency translation for f_{OUT}
f_{IN} = –10 MHz	f_{NCO} = 10 MHz	660764199	as is	$f_{OUT} = f_{IN} + f_{NCO}$ = –10 MHz +10 MHz = 0 MHz
f_{IN} = 10 MHz	f_{NCO} = –10 MHz	3634203097		$f_{OUT} = f_{IN} + f_{NCO}$ = 10 MHz + (–10 MHz) = 0 MHz
f_{IN} = 10 MHz	f_{NCO} = 10 MHz	660764199	inverted	$f_{OUT} = f_{IN} - f_{NCO}$ = 10 MHz – 10 MHz = 0 MHz
f_{IN} = –10 MHz	f_{NCO} = –10 MHz	3634203097		$f_{OUT} = f_{IN} - f_{NCO}$ = –10 MHz – (–10 MHz) = 0 MHz

Copyright © 2022 Texas Instruments Incorporated

8.3.4.5 Decimation Filter

The ADC366x supports complex decimation by 2, 4, 8, 16 and 32 with a pass-band bandwidth of ~ 80% and a stopband rejection of at least 85 dB. Table 8-3 gives an overview of the pass-band bandwidth of the different decimation settings with respect to ADC sampling rate F_S. In real decimation mode the output bandwidth is half of the complex bandwidth.

Table 8-3. Decimation Filter Summary and Maximum Available Output Bandwidth

REAL/COMPLEX DECIMATION	DECIMATION SETTING N	OUTPUT RATE	OUTPUT BANDWIDTH	OUTPUT RATE (F_S = 65 MSPS)	OUTPUT BANDWIDTH (F_S = 65 MSPS)
Complex	2	F_S / 2 complex	0.8 × F_S / 2	32.5 MSPS complex	26 MHz
	4	F_S / 4 complex	0.8 × F_S / 4	16.25 MSPS complex	13 MHz
	8	F_S / 8 complex	0.8 × F_S / 8	8.125 MSPS complex	6.5 MHz
	16	F_S / 16 complex	0.8 × F_S / 16	4.0625 MSPS complex	3.25 MHz
	32	F_S / 32 complex	0.8 × F_S / 32	2.03125 MSPS complex	1.625 MHz
Real	2	F_S / 2 real	0.4 × F_S / 2	32.5 MSPS	13 MHz
	4	F_S / 4 real	0.4 × F_S / 4	16.25 MSPS	6.5 MHz
	8	F_S / 8 real	0.4 × F_S / 8	8.125 MSPS	3.25 MHz
	16	F_S / 16 real	0.4 × F_S / 16	4.0625 MSPS	1.625 MHz
	32	F_S / 32 real	0.4 × F_S / 32	2.03125 MSPS	0.8125 MHz

The decimation filter responses normalized tot he ADC sampling clock frequency are illustrated in Figure 8-27 to Figure 8-36. They are interpreted as follows:

Each figure contains the filter pass-band, transition band(s) and alias or stop-band(s) as shown in Figure 8-26. The x-axis shows the offset frequency (after the NCO frequency shift) normalized to the ADC sampling rate F_S.

For example, in the divide-by-4 complex setup, the output data rate is F_S / 4 complex with a Nyquist zone of F_S / 8 or 0.125 × F_S. The transition band (colored in blue) is centered around 0.125 × F_S and the alias transition band is centered at 0.375 × F_S. The stop-bands (colored in red), which alias on top of the pass-band, are centered at 0.25 × F_S and 0.5 × F_S. The stop-band attenuation is greater than 85 dB.

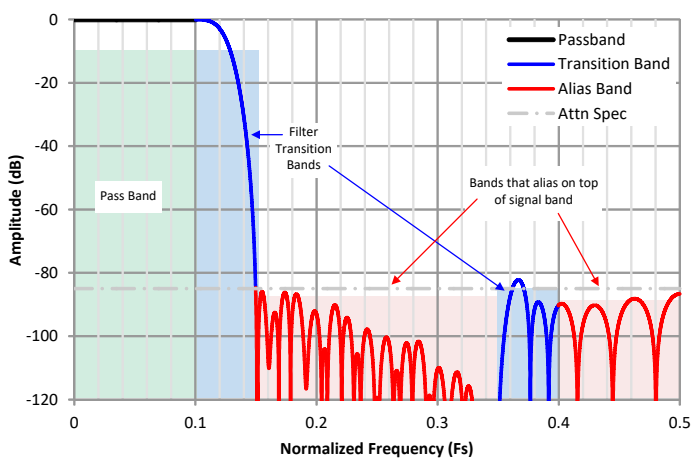

Figure 8-26. Interpretation of the Decimation Filter Plots

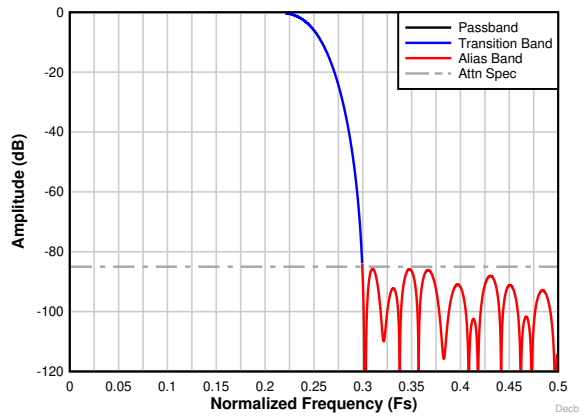

Figure 8-27. Decimation by 2 complex frequency response

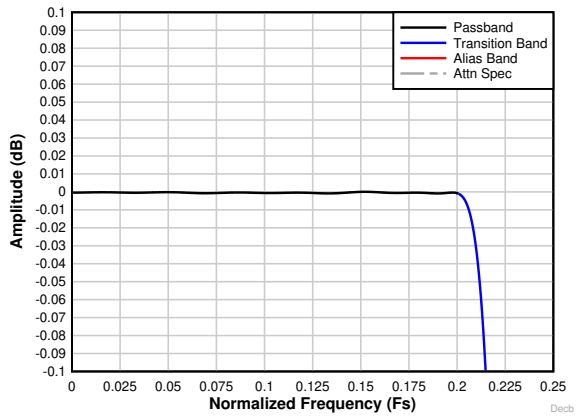

Figure 8-28. Decimation by 2 complex passband ripple response

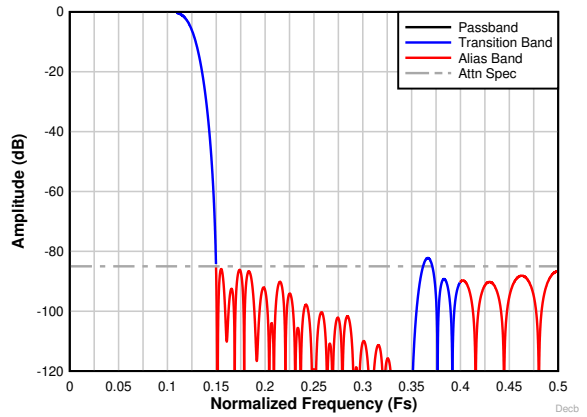

Figure 8-29. Decimation by 4 complex frequency response

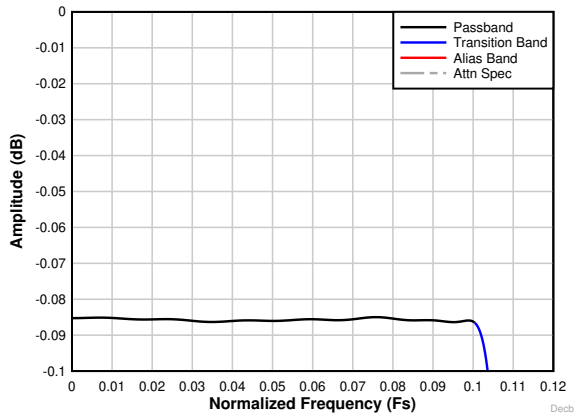

Figure 8-30. Decimation by 4 complex passband ripple response

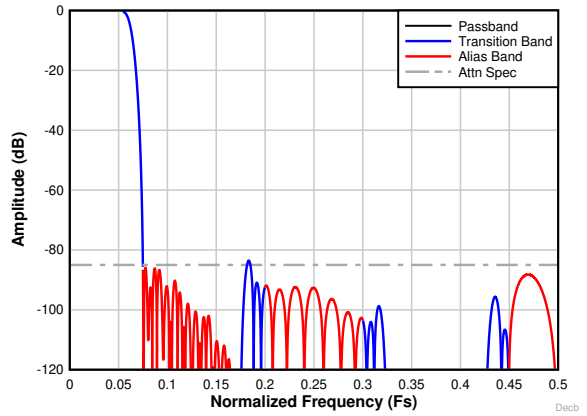

Figure 8-31. Decimation by 8 complex frequency response

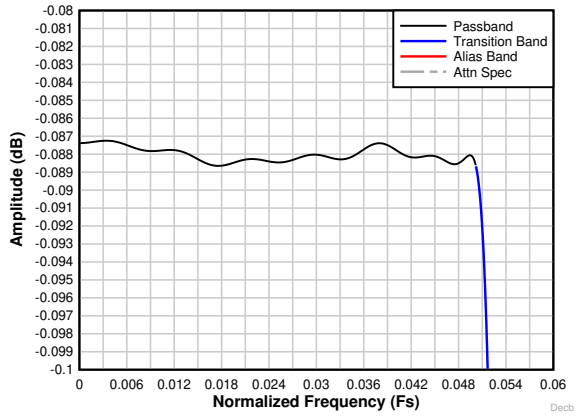

Figure 8-32. Decimation by 8 complex passband ripple response

Copyright © 2022 Texas Instruments Incorporated

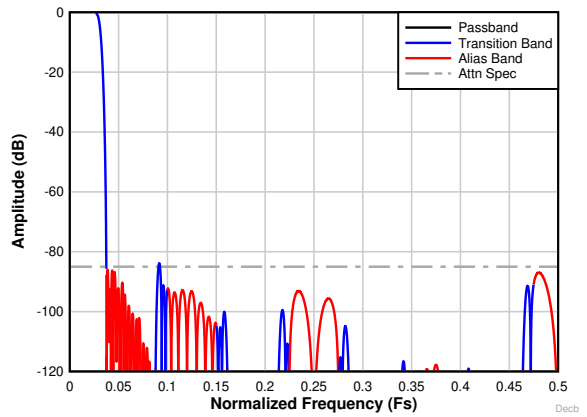

Figure 8-33. Decimation by 16 complex frequency response

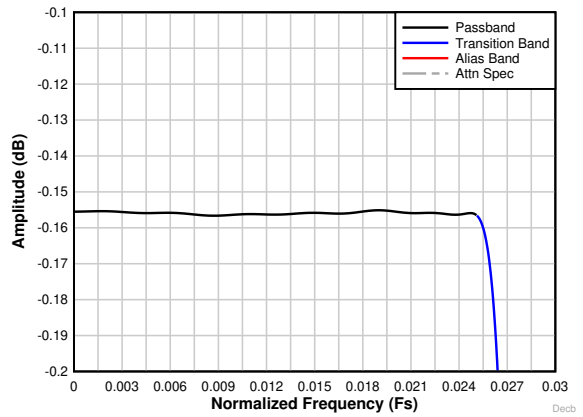

Figure 8-34. Decimation by 16 complex passband ripple response

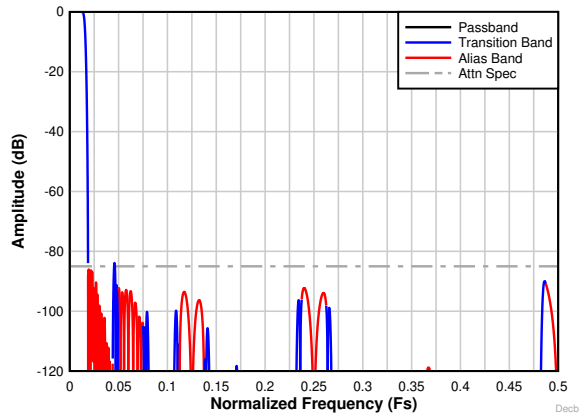

Figure 8-35. Decimation by 32 complex frequency response

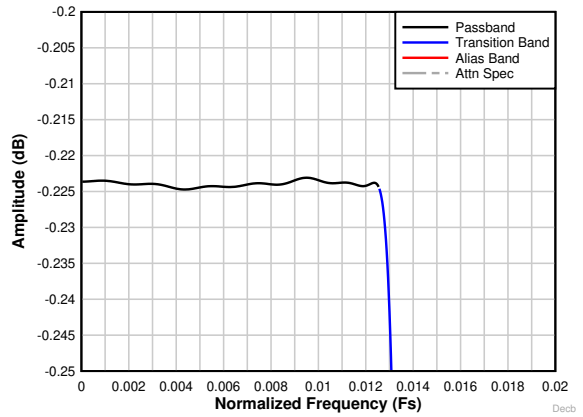

Figure 8-36. Decimation by 32 complex passband ripple response

8.3.4.6 SYNC

The PDN/SYNC pin can be used to synchronize multiple devices using an external SYNC signal. The PDN/SYNC pin can be configured via SPI (SYNC EN bit) from power down to synchronization functionality and is latched in by the rising edge of the sampling clock as shown in Figure 8-37.

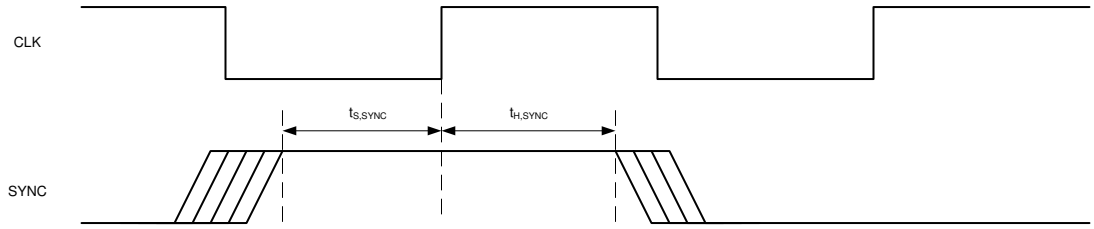

Figure 8-37. External SYNC timing diagram

The synchronization signal is only required when using the decimation filter - either using the SPI SYNC register or the PDN/SYNC pin. It resets internal clock dividers used in the decimation filter and aligns the internal clocks as well as I and Q data within the same sample. If no SYNC signal is given the internal clock dividers will not be synchronized, which can lead to a fractional delay across different devices. The SYNC signal also resets the NCO phase and loads the new NCO frequency (same as the MIXER RESTART bit).

When trying to resynchronize during operation, the SYNC toggle should occur at 64*K clock cycles, where K is an integer. This ensures phase continuity of the clock divider.

8.3.4.7 Output Formatting with Decimation

When using decimation, the output data is formatted as shown in Figure 8-38 and Figure 8-39. The examples are shown for 16-bit output for 2-wire (8x serialization), 1-wire (16x serialization) and 1/2-wire (32x serialization).

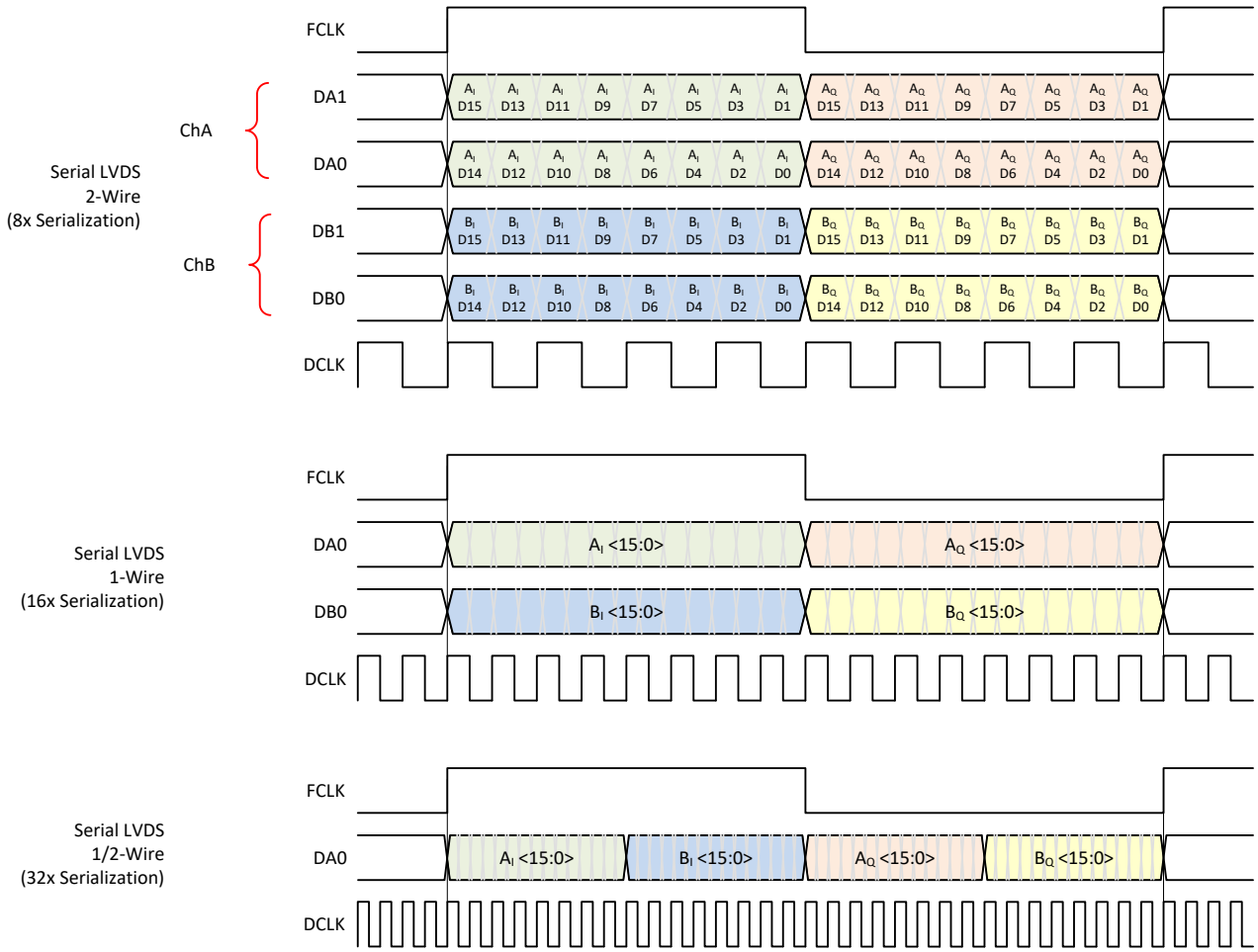

Figure 8-38. Output Data Format in Complex Decimation

Table 8-4 illustrates the output interface data rate along with the corresponding DCLK/DCLKIN and FCLK frequencies based on output resolution (R), number of SLVDS lanes (L) and complex decimation setting (N).

Furthermore the table shows an actual lane rate example for the 2-, 1- and 1/2-wire interface, 16-bit output resolution and complex decimation by 4.

Table 8-4. Serial LVDS Lane Rate Examples with Complex Decimation and 16-bit Output Resolution

DECIMATION SETTING	ADC SAMPLING RATE	OUTPUT RESOLUTION	# of WIRES	FCLK	DCLKIN, DCLK	DA/B0,1
N	F_S	R	L	F_S / N	[DA/B0,1] / 2	F_S x 2 x R / L / N
4	65 MSPS	16	2	16.25 MHz	130 MHz	260 MHz
			1		260 MHz	520 MHz
	62.5 MSPS		1/2	15.625 MHz	500 MHz	1000 MHz

Copyright © 2022 Texas Instruments Incorporated

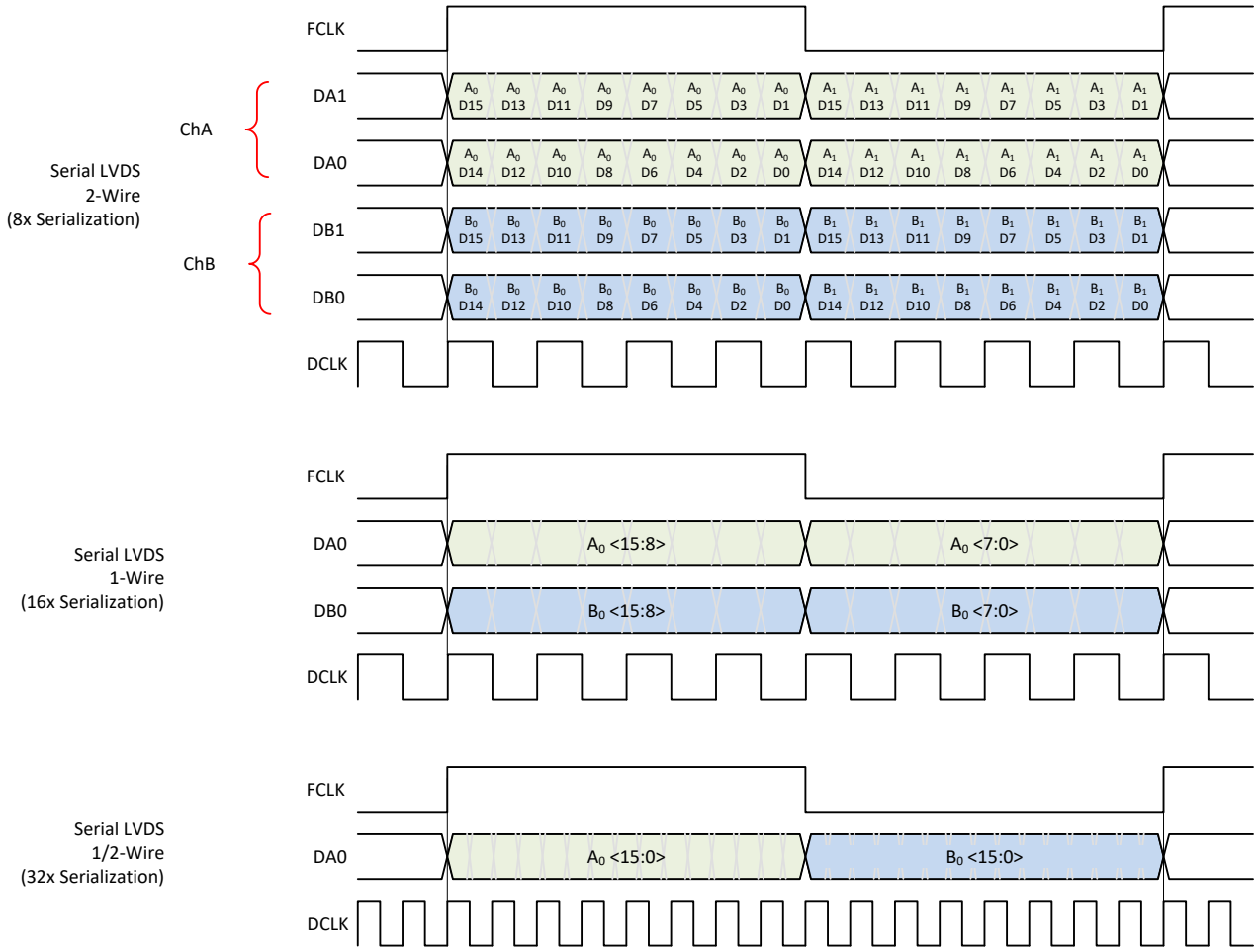

Figure 8-39. Output Data Format in Real Decimation

Table 8-5 illustrates the output interface data rate along with the corresponding DCLK/DCLKIN and FCLK frequencies based on output resolution (R), number of SLVDS lanes (L) and real decimation setting (M).

Furthermore the table shows an actual lane rate example for the 2-, 1- and 1/2-wire interface, 16-bit output resolution and real decimation by 4.

Table 8-5. Serial LVDS Lane Rate Examples with Real Decimation and 16-bit Output Resolution

DECIMATION SETTING	ADC SAMPLING RATE	OUTPUT RESOLUTION	# of WIRES	FCLK	DCLKIN, DCLK	DA/B0,1
M	F_S	R	L	F_S / M / 2 (L = 2) F_S / M (L = 1, 1/2)	[DA/B0,1] / 2	F_S x R / L / M
4	65 MSPS	16	2	8.125 MHz	65 MHz	130 MHz
			1	16.25 MHz	130 MHz	260 MHz
			1/2		260 MHz	520 MHz

8.3.5 Digital Interface

The serial LVDS interface supports the data output with 2-wire, 1-wire and 1/2-wire operation. The actual data output rate depends on the output resolution and number of lanes used.

The ADC366x requires an external serial LVDS clock input (DCLKIN), which is used to transmit the data out of the ADC along with the data clock (DCLK). The phase relationship between DCLKIN and the sampling clock is irrelevant but both clocks need to be frequency locked. The SLVDS interface is configured using SPI register writes.

8.3.5.1 Output Formatter

The digital output interface uses a flexible output bit mapper as shown in Figure 8-40. The bit mapper takes the 16 bit output directly from the ADC or from digital filter block and reformats it to a resolution of 14, 18 or 20-bit. The output serialization factor gets adjusted accordingly for 2-, 1- and 1/2-wire interface mode. The maximum output data rate can not be exceeded independently of output resolution and serialization factor.

For 14-bit output resolution, the LSBs is truncated during the reformatting. With 18 and 20-bit output, in bypass mode 0s are added while in decimation mode and the digital averaging mode the full 20-bit output is used.

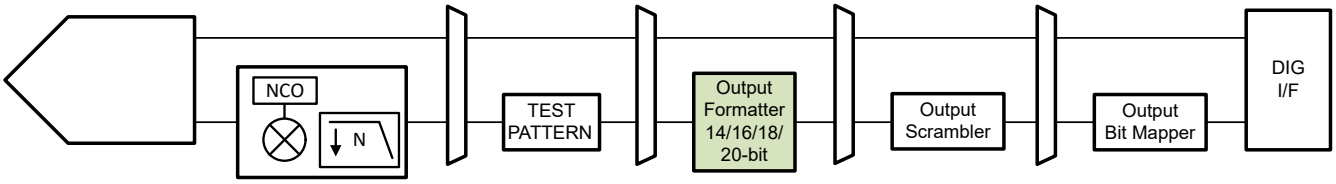

Figure 8-40. Interface output bit mapper

Table 8-6 provides an overview for the resulting serialization factor depending on output resolution and output modes. Note that the DCLKIN frequency needs to be adjusted accordingly as well. Changing the output resolution to 14-bit, 2-wire mode for example would result in DCLKIN = F_S * 3.5 instead of * 4.

Table 8-6. Serialization factor vs output resolution for different output modes

OUTPUT RESOLUTION	Interface	SERIALIZATION	FCLK	DCLKIN	DCLK	D0/D1
14-bit	2-Wire	7x	F_S/2	F_S* 3.5	F_S* 3.5	F_S* 7
	1-Wire	14x	F_S	F_S* 7	F_S* 7	F_S* 14
	1/2-Wire	28x	F_S	F_S* 14	F_S* 14	F_S* 28
16-bit (default)	2-Wire	8x	F_S/2	F_S* 4	F_S* 4	F_S* 8
	1-Wire	16x	F_S	F_S* 8	F_S* 8	F_S* 16
	1/2-Wire	32x	F_S	F_S* 16	F_S* 16	F_S* 32
18-bit	2-Wire	9x	F_S/2	F_S* 4.5	F_S* 4.5	F_S* 9
	1-Wire	18x	F_S	F_S* 9	F_S* 9	F_S* 18
	1/2-Wire	36x	F_S	F_S* 18	F_S* 18	F_S* 36
20-bit	2-Wire	10x	F_S/2	F_S* 5	F_S* 5	F_S* 10
	1-Wire	20x	F_S	F_S* 10	F_S* 10	F_S* 20
	1/2-Wire	40x	F_S	F_S* 20	F_S* 20	F_S* 40

The programming sequence to change the output interface and/or resolution from default settings is shown in Table 8-8.

Copyright © 2022 Texas Instruments Incorporated

8.3.5.2 Output Bit Mapper

The output bit mapper allows change to the output bit order for any selected interface mode.

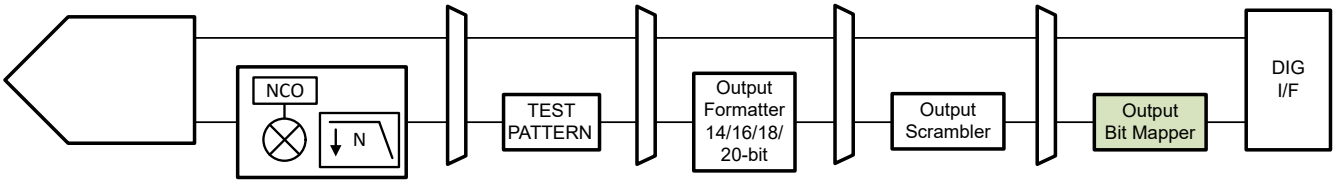

Figure 8-41. Output Bit Mapper

It is a two step process to change the output bit mapping and assemble the output data bus:

1. Both channel A and B can have up to 20-bit output. Each output bit of either channel has a unique identifier bit as shown in Table 8-7. The MSB starts with bit D19 – depending on output resolution chosen the LSB would be D6 (14-bit) to D0 (20-bit). The 'previous sample' is only needed in 2-w mode.
2. The bit mapper is then used to assemble the output sample. The following sections detail how to remap the serial output format.

Table 8-7. Unique identifier of each data bit

Bit	Channel A		Channel B	
	Previous sample (2w only)	Current sample	Previous sample (2w only)	Current sample
D19 (MSB)	0x2D	0x6D	0x29	0x69
D18	0x2C	0x6C	0x28	0x68
D17	0x27	0x67	0x23	0x63
D16	0x26	0x66	0x22	0x62
D15	0x25	0x65	0x21	0x61
D14	0x24	0x64	0x20	0x60
D13	0x1F	0x5F	0x1B	0x5B
D12	0x1E	0x5E	0x1A	0x5A
D11	0x1D	0x5D	0x19	0x59
D10	0x1C	0x5C	0x18	0x58
D9	0x17	0x57	0x13	0x53
D8	0x16	0x56	0x12	0x52
D7	0x15	0x55	0x11	0x51
D6	0x14	0x54	0x10	0x50
D5	0x0F	0x4F	0x0B	0x4B
D4	0x0E	0x4E	0x0A	0x4A
D3	0x0D	0x4D	0x09	0x49
D2	0x0C	0x4C	0x08	0x48
D1	0x07	0x47	0x03	0x43
D0 (LSB)	0x06	0x46	0x02	0x42

In the serial output mode, a data bit (with unique identifier) needs to be assigned to each location within the serial output stream. There are a total of 40 addresses available per channel. Channel A spans from address 0x39 to 0x60 and channel B from address 0x61 to 0x88. When using complex decimation, the output bit mapper is applied to both the "I" and the "Q" sample.

Copyright © 2022 Texas Instruments Incorporated

2-wire mode: in this mode both the current and the previous sample have to be used in the address space as shown in Figure 8-42. The address order is different for 14/18-bit and 16/20-bit. Note: there are unused addresses between samples for resolution less than 20-bit (grey back ground), which can be skipped if not used.

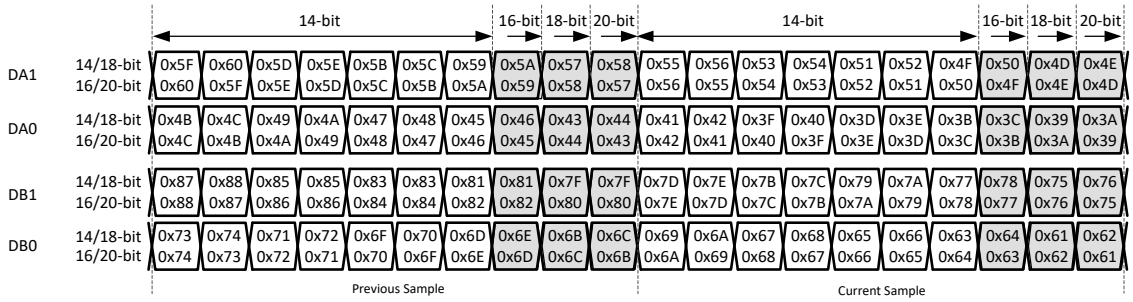

Figure 8-42. 2-wire output bit mapper

In the following example (Figure 8-43), the 16-bit 2-wire serial output is reordered to where lane DA1/DB1 carries the 8 MSB and lane DA0/DB0 carries 8 LSBs.

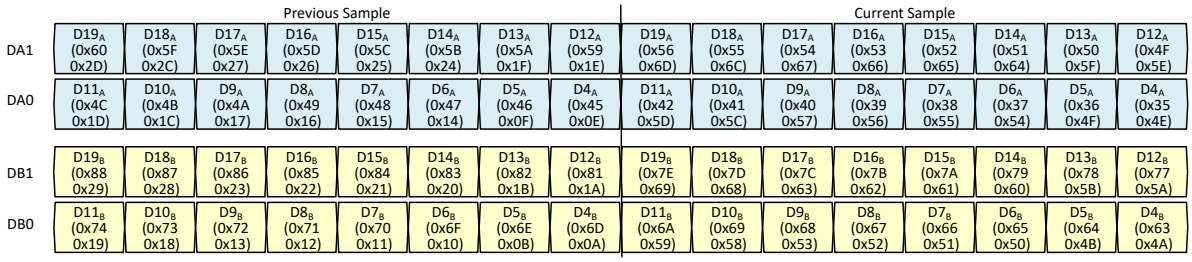

Figure 8-43. Example: 2-wire output bit mapping

1-wire mode: Only the 'current' sample needs to programmed in the address space. If desired, it can be duplicated on DA1/DB1 as well (using addresses shown below) in order to have a redundant output. Lane DA1/DB1 needs to be powered up in that case.

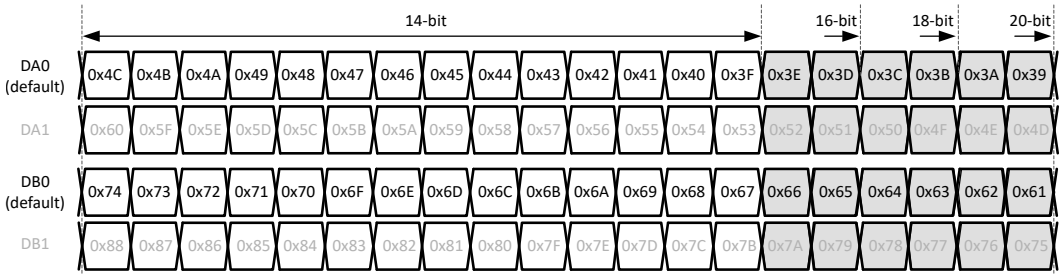

Figure 8-44. 1-wire output bit mapping

½-wire mode: The output is only lane DA0 and the sample order is programmed into the 40 addresses of chA (from 0x39 to 0x60). It covers 2 samples (one for chA, one for chB) as shown below. If desired, it can be duplicated on DB0 as well (using addresses shown Figure 8-45) in order to have a redundant output. Lane DB0 needs to be powered up in that case.

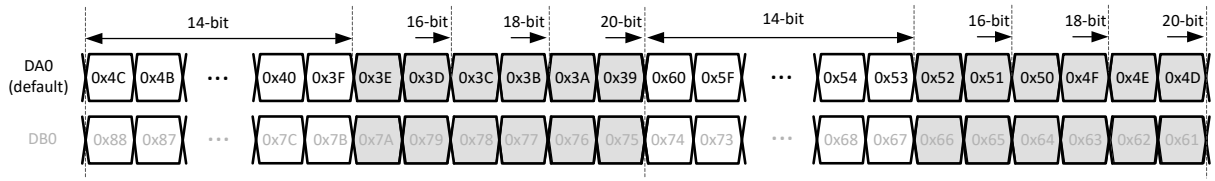

Figure 8-45. 1/2-wire output bit mapping

Copyright © 2022 Texas Instruments Incorporated

8.3.5.3 Output Scrambler

The device includes an optional output scrambler feature. Scrambling is performed on each serial output lane independently. When enabled, the serial output bit stream is scrambled where each output bit is XOR-ed with 2 previous bits (k-14 and k-15) as shown in Figure 8-47. For descrambling it should be noted that the output bit mapper is located after the scrambler.

On the external receiver, the incoming serial data stream can be descrambled by XOR-ing each incoming bit with 2 previous bits (k-14 and k-15).

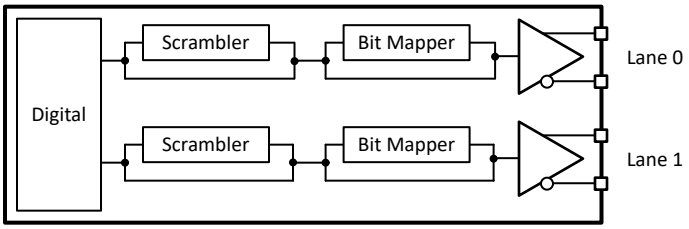

Figure 8-46. Output scrambling per lane

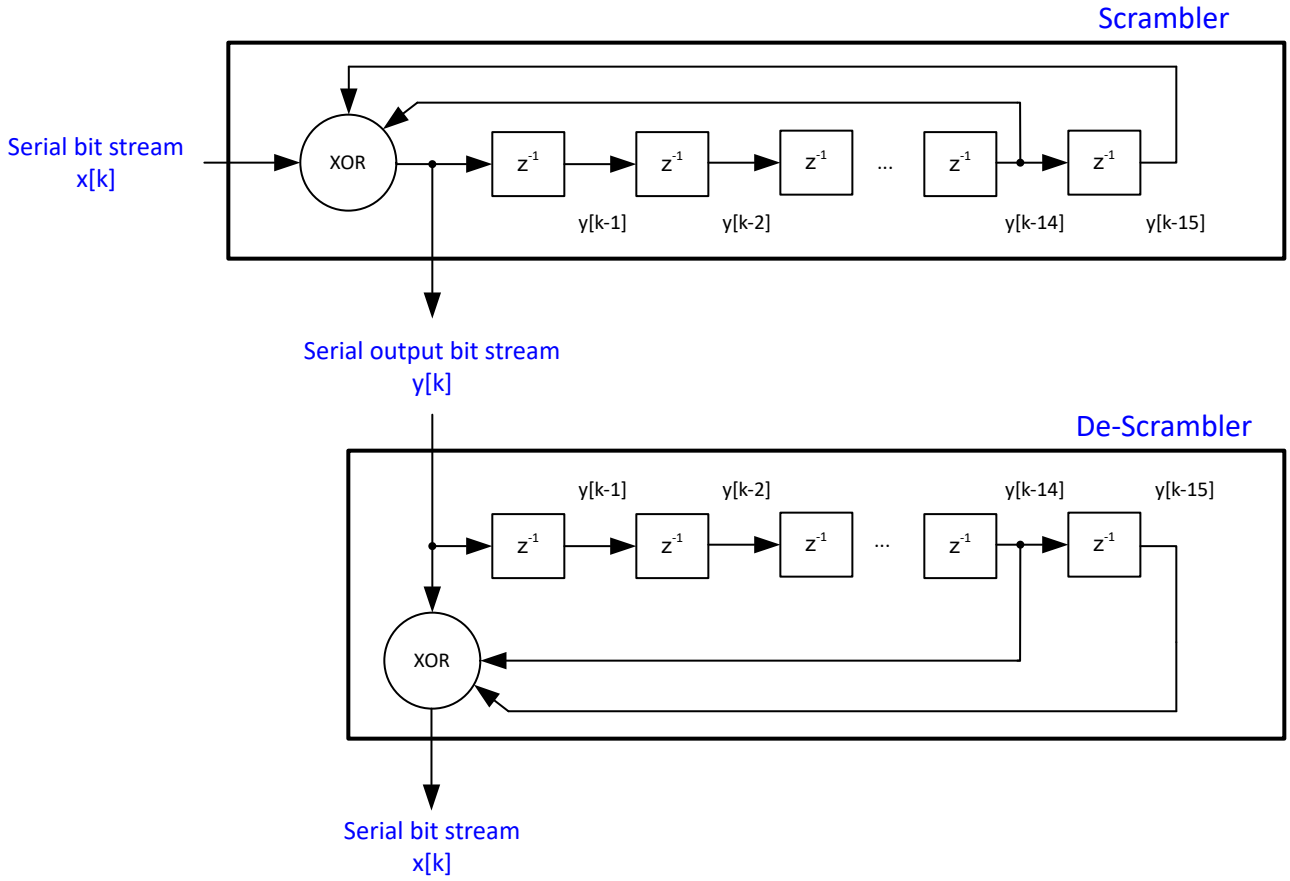

Figure 8-47. Output scrambler and descrambler operation

Scrambling is enabled by disabling digital bypass (register 0x24, D2) and enabling scrambling (register 0x22, D6).

8.3.5.4 Output Interface/Mode Configuration

The following sequence summarizes all the relevant registers for changing the output interface and/or enabling the decimation filter. Steps 1 and 2 must come first since the E-Fuse load reset the SPI writes, the remaining steps can come in any order.

Table 8-8. Configuration steps for changing interface or decimation

STEP	FEATURE	ADDRESS	DESCRIPTION				
1	Output Interface	0x07	Select the output interface bit mapping depending on resolution and output interface.				
			Output Resolution		2-wire	1-wire	1/2-wire
			14-bit		0x2B	0x6C	0x8D
			16-bit		0x4B		
			18-bit		0x2B		
			20-bit		0x4B		
2		0x13	Load the output interface bit mapping using the E-fuse loader (0x13, D0). Program register 0x13 to 0x01, wait ~ 1ms so that bit mapping is loaded properly followed by 0x13 0x00				
3		0x19	Configure the FCLK frequency based on bypass/decimation and number of lanes used.				
			Bypass/Dec	SLVDS	FCLK SRC (D7)	FCLK DIV (D4)	TOG FCLK (D0)
			Bypass/ Real Decimation	2-wire	0	1	0
				1-wire	0	0	0
				1/2-wire	0	0	0
			Complex Decimation	2-wire	1	0	0
				1-wire	1	0	0
				1/2-wire	0	0	1
4		0x1B	Select the output interface resolution using the bit mapper (D5-D3).				
5		0x20 0x21 0x22	Select the FCLK pattern for decimation for proper duty cycle output of the frame clock.				
				Output Resolution	2-wire	1-wire	1/2-wire
			Real Decimation	14-bit	use default	0xFE000	use default
				16-bit		0xFF000	
				18-bit		0xFF800	
				20-bit		0xFFC00	
			Complex Decimation	14-bit		0xFFFFF	0xFFFFF
				16-bit			
				18-bit			
				20-bit			
6		0x39..0x60 0x61..0x88	Change output bit mapping for chA and chB if desired. This works also with the default interface selection.				
7		0x24 0x22	Enable scrambling				
8	Decimation Filter	0x24	Enable the decimation filter				
9		0x25	Configure the decimation filter				
10		0x2A/B/C/D 0x31/2/3/4	Program the NCO frequency for complex decimation (can be skipped for real decimation)				
11		0x27 0x2E	Configure the complex output data stream (set both bits to 0 for real decimation)				
			SLVDS			OP-Order (D4)	Q-Delay (D3)
			2-wire			1	0
			1-wire			0	1
			1/2-wire			1	1
12		0x26	Set the mixer gain and toggle the mixer reset bit to update the NCO frequency.				

Copyright © 2022 Texas Instruments Incorporated

8.3.5.4.1 Configuration Example

The following is a step by step programming example to configure the ADC366x to complex decimation by 8 with 1-wire SLVDS and 16-bit output.

1. 0x07 (address) 0x6C (load bit mapper configuration for 16-bit output with 1-wire SLVDS)
2. 0x13 0x01, wait 1 ms, 0x13 0x00 (load e-fuse)
3. 0x19 0x80 (configure FCLK)
4. 0x1B 0x88 (select 16-bit output resolution)
5. 0x20 0xFF, 0x21 0xFF, 0x22 0x0F (configure FCLK pattern)
6. 0x24 0x06 (enable decimation filter)
7. 0x25 0x30 (configure complex decimation by 8)
8. 0x2A/B/C/D and 0x31/32/33/34 (program NCO frequency)
9. 0x27/0x2E 0x08 (configure Q-delay register bit)
10. 0x26 0xAA, 0x26 0x88 (set digital mixer gain to 6-dB and toggle the mixer update)

8.3.5.5 Output Data Format

The output data can be configured to two's complement (default) or offset binary formatting using SPI register writes (register 0x8F and 0x92). Table 8-9 provides an overview for minimum and maximum output codes for the two formatting options. The actual output resolution is set by the output bit mapper.

Table 8-9. Overview of minimum and maximum output codes vs output resolution for different formatting

	Two's Complement (default)				Offset Binary			
RESOLUTION (BIT)	**14**	**16**	**18**	**20**	**14**	**16**	**18**	**20**
$V_{IN,MAX}$	0x1FFF	0x7FFF	0x1FFFF	0x7FFFF	0x3FFF	0xFFFF	0x3FFFF	0xFFFFF
0	0x0000		0x00000		0x2000	0x8000	0x20000	0x80000
$V_{IN,MIN}$	0x2000	0x8000	0x20000	0x80000	0x0000		0x00000	

8.3.6 Test Pattern

In order to enable in-circuit testing of the digital interface, the following test patterns are supported and enabled via SPI register writes (0x14/0x15/0x16). The test pattern generator is located after the decimation filter as shown in Figure 8-48. In decimation mode (real and complex), the test patterns replace the output data of the DDC - however channel A controls the test patterns for both channels.

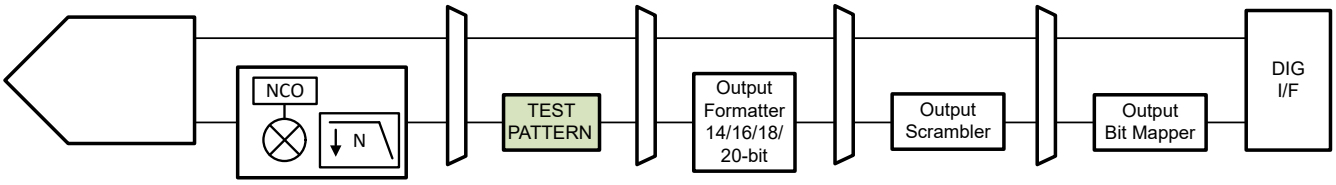

Figure 8-48. Test Pattern Generator

- RAMP Pattern: The step size needs to be configured in the CUSTOM PAT register according to the native resolution of the ADC. When selecting a higher output resolution then the additional LSBs will still be 0 in RAMP pattern mode.
  - 00001: 18-bit output resolution
  - 00100: 16-bit output resolution
  - 10000: 14-bit output resolution
- Custom Pattern: Configured in the CUSTOM PAT register

8.4 Device Functional Modes

8.4.1 Normal operation

In normal operating mode, the entire ADC full scale range gets converted to a digital output with 16-bit resolution. The output is available in as little as 1 clock cycle on the digital outputs.

8.4.2 Power Down Options

A global power down mode can be enabled via SPI as well as using the power down pin (PDN/SYNC). There is an internal pull-down 21 kΩ resistor on the PDN/SYNC input pin and the pin is active high - so the pin needs to be pulled high externally to enter global power down mode.

The SPI register map provides the capability to enable/disable individual blocks directly or via PDN pin mask in order to trade off power consumption vs wake up time as shown in Table 8-10.

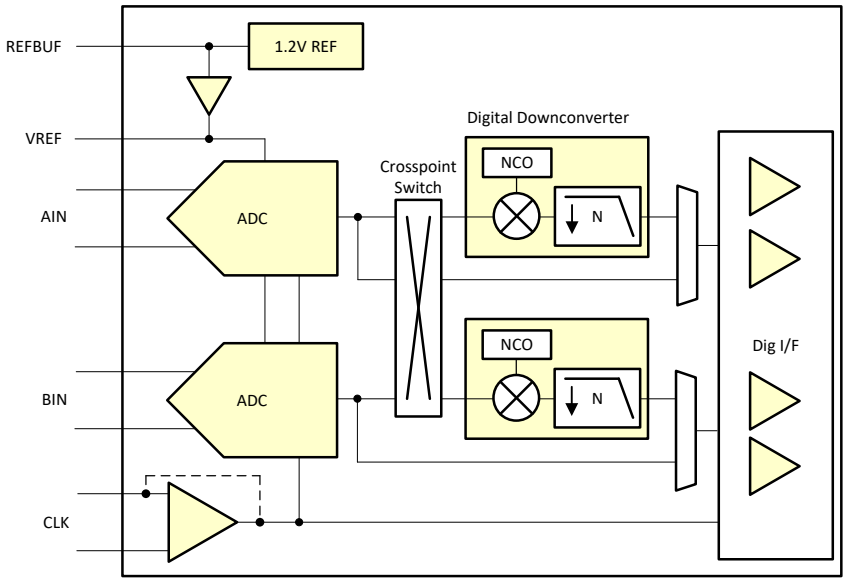

Figure 8-49. Power Down Configurations

Table 8-10. Overview of Power Down Options

Function/ Register	PDN via SPI	Mask for Global PDN	Feature - Default	Power Impact	Wake-up time	Comment
ADC	Yes	-	Enabled			Both ADC channels are included in Global PDN automatically
Reference gain amplifier	Yes	Yes	Enabled	~ 0.4 mA	~3 us	Should only be powered down in power down state.
Internal 1.2V reference	Yes		External ref	~ 1-3.5 mA	~3 ms	Internal/external reference selection is available through SPI and REFBUF pin.
Clock buffer	Yes		Differential clock	~ 1 mA	n/a	Single ended clock input saves ~ 1mA compared to differential. Some programmability is available through the REFBUF pin.
Output interface drivers	Yes	-	Enabled	varies	n/a	Depending on output interface mode, unused output drivers can be powered down for maximum power savings
Decimation filter	Yes	-	Disabled	see electrical table	n/a	

Copyright © 2022 Texas Instruments Incorporated

8.4.3 Digital Channel Averaging

The ADC366x includes a digital channel averaging feature which enables improvement of the ADC dynamic range (see Figure 8-50). The same input signal is given to both ADC inputs externally and the output of the two ADCs is averaged internally. By averaging, uncorrelated noise (e.g. ADC thermal noise) improves 3-dB while correlated noise (e.g. jitter in the clock path, reference noise) is unaffected. Therefore the averaging gives close to 3-dB improvement at low input frequencies but less at high input frequencies where clock jitter dominates the SNR.

The output from the digital averaging block is given out on the digital outputs of channel A or alternatively can be routed to the digital decimation filters using the digital mux.

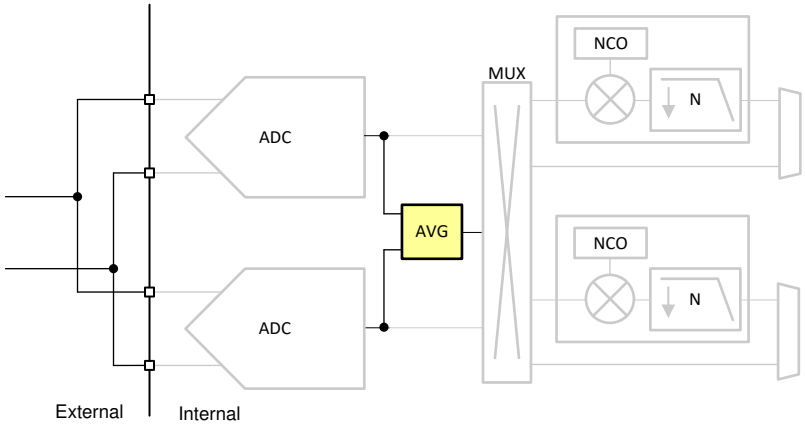

Figure 8-50. Digital Channel Averaging Diagram

8.5 Programming

The device is primarily configured and controlled using the serial programming interface (SPI) however it can operate in a default configuration without requiring the SPI interface. Furthermore the power down function as well as internal/external reference configuration is possible via pin control (PDN/SYNC and REFBUF pin).

Note

The power down command (via PIN or SPI) only goes in effect with the ADC sampling clock present.

After initial power up, the default operating configuration for each device is shown in Table 8-11.

Table 8-11. Default device configuration after power up

FEATURE	ADC3661	ADC3662	ADC3663
Signal Input	Differential		
Clock Input	Differential		
Reference	External		
Decimation	DDC bypass		
Interface	1-wire	1-wire	2-wire
Output Format	2s complement		

8.5.1 Configuration using PINs only

The ADC voltage reference can be selected using the REFBUF pin. Even though there is an internal 100 kΩ pull-up resistor to AVDD, the REFBUF pin should be set to a voltage externally and not left floating. When using a voltage divider to set the REFBUF voltage (R1 and R2 in Figure 8-51), resistor values < 5 kΩ should be used.

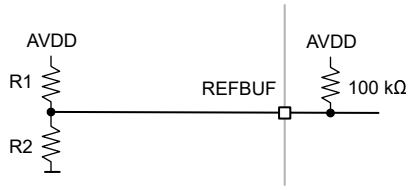

Figure 8-51. Configuration of external voltage on REFBUF pin

Table 8-12. REFBUF voltage levels control voltage reference selection

REFBUF VOLTAGE	VOLTAGE REFERENCE OPTION	CLOCKING OPTION
> 1.7 V (Default)	External reference	Differential clock input
1.2 V (1.15-1.25V)	External 1.2V input on REFBUF pin using internal gain buffer	Differential clock input
0.5 - 0.7V	Internal reference	Differential clock input
< 0.1V	Internal reference	Single ended clock input

8.5.2 Configuration using the SPI interface

The device has a set of internal registers that can be accessed by the serial interface formed by the SEN (serial interface enable), SCLK (serial interface clock) and SDIO (serial interface data input/output) pins. Serially shifting bits into the device is enabled when SEN is low. Serial data input are latched at every SCLK rising edge when SEN is active (low). The serial data are loaded into the register at every 24th SCLK rising edge when SEN is low. When the word length exceeds a multiple of 24 bits, the excess bits are ignored. Data can be loaded in multiples of 24-bit words within a single active SEN pulse. The interface can function with SCLK frequencies from 12 MHz down to very low speeds (of a few hertz) and also with a non-50% SCLK duty cycle.

8.5.2.1 Register Write

The internal registers can be programmed following these steps:

1. Drive the SEN pin low

Copyright © 2022 Texas Instruments Incorporated

2. Set the R/W bit to 0 (bit A15 of the 16-bit address) and bits A[14:12] in address field to 0.
3. Initiate a serial interface cycle by specifying the address of the register (A[11:0]) whose content is written and
4. Write the 8-bit data that are latched in on the SCLK rising edges

Figure 8-52 show the timing requirements for the serial register write operation.

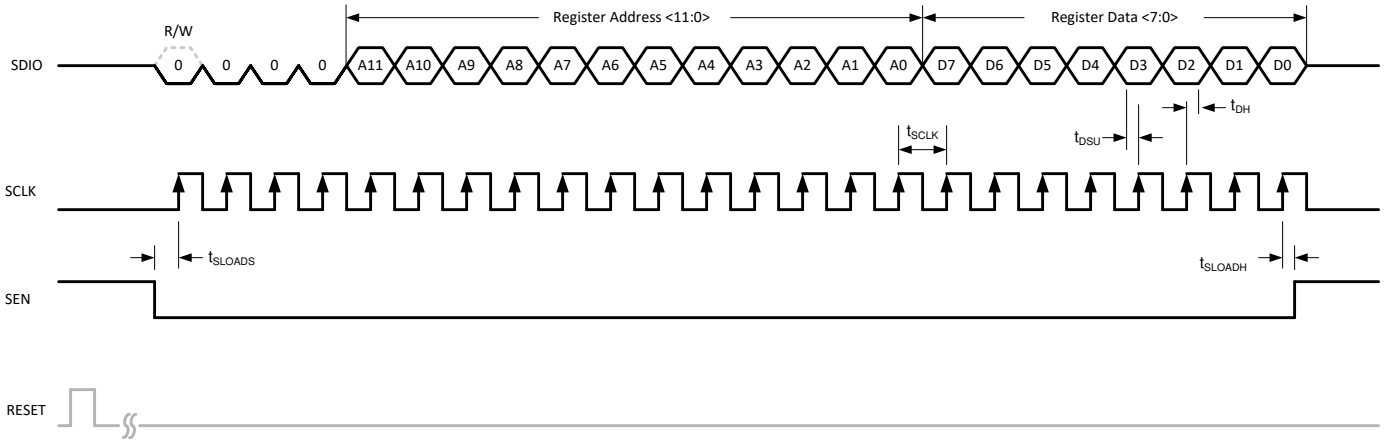

Figure 8-52. Serial Register Write Timing Diagram

8.5.2.2 Register Read

The device includes a mode where the contents of the internal registers can be read back using the SDIO pin. This readback mode can be useful as a diagnostic check to verify the serial interface communication between the external controller and the ADC. The procedure to read the contents of the serial registers is as follows:

1. Drive the SEN pin low
2. Set the R/W bit (A15) to 1. This setting disables any further writes to the registers. Set A[14:12] in address field to 0.
3. Initiate a serial interface cycle specifying the address of the register (A[11:0]) whose content must be read
4. The device launches the contents (D[7:0]) of the selected register on the SDIO pin on SCLK falling edge
5. The external controller can capture the contents on the SCLK rising edge

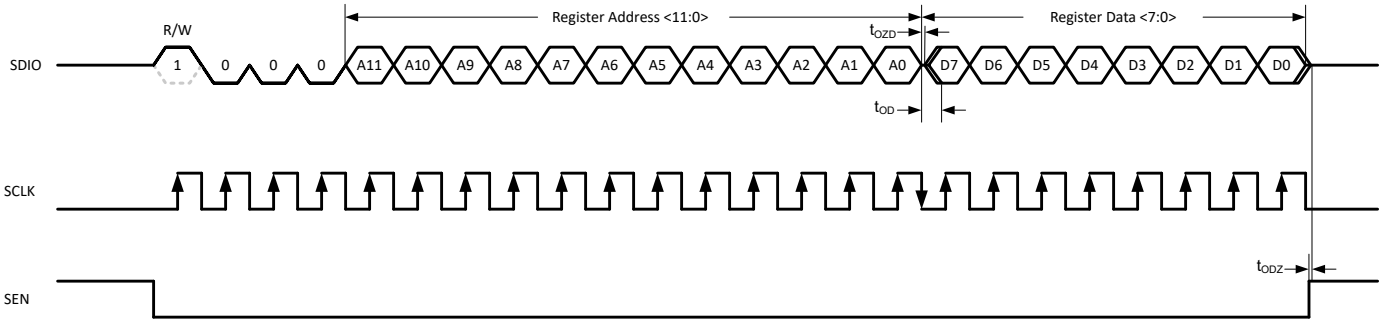

Figure 8-53. Serial Register Read Timing Diagram

8.6 Register Map

Table 8-13. Register Map Summary

REGISTER ADDRESS	REGISTER DATA							
A[11:0]	D7	D6	D5	D4	D3	D2	D1	D0
0x00	0	0	0	0	0	0	0	RESET
0x07	OP IF MAPPER			0	OP IF EN	OP IF SEL		
0x08	0	0	PDN CLKBUF	PDN REFAMP	0	PDN A	PDN B	PDN GLOBAL
0x09	0	0	PDN FCLKOUT	PDN DCLKOUT	PDN DA1	PDN DA0	PDN DB1	PDN DB0
0x0D	0	0	0	0	MASK CLKBUF	MASK REFAMP	MASK BG DIS	0
0x0E	SYNC PIN EN	SPI SYNC	SPI SYNC EN	0	REF CTRL	REF SEL		SE CLK EN
0x11	0	0	SE A	SE B	0	DLL PDN	0	AZ EN
0x13	0	0	0	0	0	0	0	E-FUSE LD
0x14	CUSTOM PAT [7:0]							
0x15	CUSTOM PAT [15:8]							
0x16	TEST PAT B			TEST PAT A			CUSTOM PAT [17:16]	
0x19	FCLK SRC	0	0	FCLK DIV	0	0	0	TOG FCLK
0x1A	0	LVDS ½ SWING	0	0	0	0	0	0
0x1B	MAPPER EN	20B EN	BIT MAPPER RES			0	0	0
0x1E	0	0	0	0	LVDS DATA DEL		LVDS DCLK DEL	
0x20	FCLK PAT [7:0]							
0x21	FCLK PAT [15:8]							
0x22	0	SCR EN	0	0	FCLK PAT [19:16]			
0x24	0	0	CH AVG EN	DDC MUX		DIG BYP	DDC EN	0
0x25	DDC MUX EN	DECIMATION			REAL OUT	0	0	MIX PHASE
0x26	MIX GAIN A		MIX RES A	FS/4 MIX A	MIX GAIN B		MIX RES B	FS/4 MIX B
0x27	0	0	0	OP ORDER A	Q-DEL A	FS/4 MIX PH A	0	0
0x2A	NCO A [7:0]							
0x2B	NCO A [15:8]							
0x2C	NCO A [23:16]							
0x2D	NCO A [31:24]							
0x2E	0	0	0	OP ORDER B	Q-DEL B	FS/4 MIX PH B	0	0
0x31	NCO B [7:0]							
0x32	NCO B [15:8]							
0x33	NCO B [23:16]							
0x34	NCO B [31:24]							
0x39..0x60	OUTPUT BIT MAPPER CHA							
0x61..0x88	OUTPUT BIT MAPPER CHB							
0x8F	0	0	0	0	0	0	FORMAT A	0
0x92	0	0	0	0	0	0	FORMAT B	0

Copyright © 2022 Texas Instruments Incorporated

8.6.1 Detailed Register Description

Figure 8-54. Register 0x00

7	6	5	4	3	2	1	0
0	0	0	0	0	0	0	RESET
R/W-0	R/W-0	R/W-0	R/W-0	R/W-0	R/W-0	R/W-0	R/W-0

Table 8-14. Register 0x00 Field Descriptions

Bit	Field	Type	Reset	Description
7-1	0	R/W	0	Must write 0
0	RESET	R/W	0	This bit resets all internal registers to the default values and self clears to 0.

Figure 8-55. Register 0x07

7	6	5	4	3	2	1	0
OP IF MAPPER			0	OP IF EN	OP IF SEL		
R/W-0	R/W-0	R/W-0	R/W-0	R/W-0	R/W-0	R/W-0	R/W-0

Table 8-15. Register 0x07 Field Descriptions

Bit	Field	Type	Reset	Description
7-5	OP IF MAPPER	R/W	000	Output interface mapper. This register contains the proper output interface bit mapping for the different interfaces. The interface bit mapping is internally loaded from e-fuses and also requires a fuse load command to go into effect (0x13, D0). Register 0x07 along with the E-Fuse Load (0x13, D0) needs to be loaded first in the programming sequence since the E-Fuse load resets the SPI writes. After initial reset the default output interface variant is loaded automatically from fuse internally. However when reading back this register reads 000 until a value is written using SPI. 001: 2-wire, 18 and 14-bit 010: 2-wire, 16-bit 011: 1-wire 100: 0.5-wire others: not used
4	0	R/W	0	Must write 0
3	OP IF EN	R/W	0	Enables changing the default output interface mode (D2-D0).
2-0	OP IF SEL	R/W	000	Selection of the output interface mode. OP IF EN (D3) needs to be enabled also. After initial reset the default output interface is loaded automatically from fuse internally. However when reading back this register reads 000 until a value is written using SPI. 011: 2-wire 100: 1-wire 101: 0.5-wire others: not used

Figure 8-56. Register 0x08

7	6	5	4	3	2	1	0
0	0	PDN CLKBUF	PDN REFAMP	0	PDN A	PDN B	PDN GLOBAL
R/W-0	R/W-0	R/W-0	R/W-0	R/W-0	R/W-0	R/W-0	R/W-0

Table 8-16. Register 0x08 Field Descriptions

Bit	Field	Type	Reset	Description
7-6	0	R/W	0	Must write 0
5	PDN CLKBUF	R/W	0	Powers down sampling clock buffer 0: Clock buffer enabled 1: Clock buffer powered down
4	PDN REFAMP	R/W	0	Powers down internal reference gain amplifier 0: REFAMP enabled 1: REFAMP powered down
3	0	R/W	0	Must write 0
2	PDN A	R/W	0	Powers down ADC channel A 0: ADC channel A enabled 1: ADC channel A powered down
1	PDN B	R/W	0	Powers down ADC channel B 0: ADC channel B enabled 1: ADC channel B powered down
0	PDN GLOBAL	R/W	0	Global power down via SPI 0: Global power disabled 1: Global power down enabled. Power down mask (register 0x0D) determines which internal blocks are powered down.

Figure 8-57. Register 0x09

7	6	5	4	3	2	1	0
0	0	PDN FCLKOUT	PDN DCLKOUT	PDN DA1	PDN DA0	PDN DB1	PDN DB0
R/W-0	R/W-0	R/W-0	R/W-0	R/W-0	R/W-0	R/W-0	R/W-0

Table 8-17. Register 0x09 Field Descriptions

Bit	Field	Type	Reset	Description
7-6	0	R/W	0	Must write 0
5	PDN FCLKOUT	R/W	0	Powers down frame clock (FCLK) LVDS output buffer 0: FCLK output buffer enabled 1: FCLK output buffer powered down
4	PDN DCLKOUT	R/W	0	Powers down DCLK LVDS output buffer 0: DCLK output buffer enabled 1: DCLK output buffer powered down
3	PDN DA1	R/W	0	Powers down LVDS output buffer for channel A, lane 1. NOT powered down automatically in 1-wire and 1/2-wire mode. 0: DA1 LVDS output buffer enabled 1: DA1 LVDS output buffer powered down
2	PDN DA0	R/W	0	Powers down LVDS output buffer for channel A, lane 0. 0: DA0 LVDS output buffer enabled 1: DA0 LVDS output buffer powered down
1	PDN DB1	R/W	0	Powers down LVDS output buffer for channel B, lane 1. NOT powered down automatically in 1-wire and 1/2-wire mode. 0: DB1 LVDS output buffer enabled 1: DB1 LVDS output buffer powered down
0	PDN DB0	R/W	0	Powers down LVDS output buffer for channel B, lane 0. NOT powered down automatically in 1/2-wire mode. 0: DB0 LVDS output buffer enabled 1: DB0 LVDS output buffer powered down

Copyright © 2022 Texas Instruments Incorporated

Figure 8-58. Register 0x0D (PDN GLOBAL MASK)

7	6	5	4	3	2	1	0
0	0	0	0	MASK CLKBUF	MASK REFAMP	MASK BG DIS	0
R/W-0	R/W-0	R/W-0	R/W-0	R/W-0	R/W-0	R/W-0	R/W-0

Table 8-18. Register 0x0D Field Descriptions

Bit	Field	Type	Reset	Description
7-4	0	R/W	0	Must write 0
3	MASK CLKBUF	R/W	0	Global power down mask control for sampling clock input buffer. 0: Clock buffer will get powered down when global power down is exercised. 1: Clock buffer will NOT get powered down when global power down is exercised.
2	MASK REFAMP	R/W	0	Global power down mask control for reference amplifier. 0: Reference amplifier will get powered down when global power down is exercised. 1: Reference amplifier will NOT get powered down when global power down is exercised.
1	MASK BG DIS	R/W	0	Global power down mask control for internal 1.2V bandgap voltage reference. Setting this bit reduces power consumption in global power down mode but increases the wake up time. See the power down option overview. 0: Internal 1.2V bandgap voltage reference will NOT get powered down when global power down is exercised. 1: Internal 1.2V bandgap voltage reference will get powered down when global power down is exercised.
0	0	R/W	0	Must write 0

Figure 8-59. Register 0x0E

7	6	5	4	3	2	1	0
SYNC PIN EN	SPI SYNC	SPI SYNC EN	0	REF CTL	REF SEL		SE CLK EN
R/W-0	R/W-0	R/W-0	R/W-0	R/W-0	R/W-0	R/W-0	R/W-0

Table 8-19. Register 0x0E Field Descriptions

Bit	Field	Type	Reset	Description
7	SYNC PIN EN	R/W	0	This bit controls the functionality of the SYNC/PDN pin. 0: SYNC/PDN pin exercises global power down mode when pin is pulled high. 1: SYNC/PDN pin issues the SYNC command when pin is pulled high.
6	SPI SYNC	R/W	0	Toggling this bit issues the SYNC command using the SPI register write. SYNC using SPI must be enabled as well (D5). This bit doesn't self reset to 0. 0: Normal operation 1: SYNC command issued.
5	SPI SYNC EN	R/W	0	This bit enables synchronization using SPI instead of the SYNC/PDN pin. 0: Synchronization using SPI register bit disabled. 1: Synchronization using SPI register bit enabled.
4	0	R/W	0	Must write 0
3	REF CTL	R/W	0	This bit determines if the REFBUF pin controls the voltage reference selection or the SPI register (D2-D1). 0: The REFBUF pin selects the voltage reference option. 1: Voltage reference is selected using SPI (D2-D1) and single ended clock using D0.
2-1	REF SEL	R/W	00	Selects of the voltage reference option. REF CTRL (D3) must be set to 1. 00: Internal reference 01: External voltage reference (1.2V) using internal reference buffer (REFBUF) 10: External voltage reference 11: not used
0	SE CLK EN	R/W	0	Selects single ended clock input and powers down the differential sampling clock input buffer. REF CRTL (D3) must be set to 1. 0: Differential clock input 1: Single ended clock input

Copyright © 2022 Texas Instruments Incorporated

Figure 8-60. Register 0x11

7	6	5	4	3	2	1	0
0	0	SE A	SE B	0	DLL PDN	0	AZ EN
R/W-0	R/W-0	R/W-0	R/W-0	R/W-0	R/W-0	R/W-0	R/W-0

Table 8-20. Register 0x11 Field Descriptions

Bit	Field	Type	Reset	Description
7-6	0	R/W	0	Must write 0
5	SE A	R/W	0	This bit enables single ended analog input, channel A. In this mode the SNR reduces by 3-dB. 0: Differential input 1: Single ended input
4	SE B	R/W	0	This bit enables single ended analog input, channel B. In this mode the SNR reduces by 3-dB. 0: Differential input 1: Single ended input
3	0	R/W	0	Must write 0
2	DLL PDN	R/W	0	This register applies ONLY to the ADC3663. It powers down the internal DLL, which is used to adjust the sampling time. This register must only be enabled when operating at sampling rates below 40 MSPS. When DLL PDN bit is enabled the sampling time is directly dependent on sampling clock duty cycle (with a 50/50 duty the sampling time is $T_S/2$). 0: Sampling time is $T_S/4$ 1: Sampling time is $T_S/2$ (only for sampling rates below 40 MSPS).
1	0	R/W	0	Must write 0
0	AZ EN	R/W	0/1	This bit enables the internal auto-zero circuitry. It is enabled by default for the ADC3661/62 and disabled for the ADC3663. ADC3661/62: 0: Auto-zero enabled 1: Auto-zero disabled ADC3663: 0: Auto-zero disabled 1: Auto-zero enabled

Figure 8-61. Register 0x13

7	6	5	4	3	2	1	0
0	0	0	0	0	0		E-FUSE LD
R/W-0	R/W-0	R/W-0	R/W-0	R/W-0	R/W-0	R/W-0	R/W-0

Table 8-21. Register 0x13 Field Descriptions

Bit	Field	Type	Reset	Description
7-1	0	R/W	0	Must write 0
0	E-FUSE LD	R/W	0	This register bit loads the internal bit mapping for different interfaces. After setting the interface in register 0x07, this E-FUSE LD bit needs to be set to 1 and reset to 0 for loading to go into effect. Register 0x07 along with the E-Fuse Load (0x13, D0) needs to be loaded first in the programming sequence since the E-Fuse load resets the SPI writes. 0: E-FUSE LOAD set 1: E-FUSE LOAD reset

Figure 8-62. Register 0x14/15/16

7	6	5	4	3	2	1	0
CUSTOM PAT [7:0]							
CUSTOM PAT [15:8]							
TEST PAT B			TEST PAT A			CUSTOM PAT [17:16]	
R/W-0	R/W-0	R/W-0	R/W-0	R/W-0	R/W-0	R/W-0	R/W-0

Table 8-22. Register 0x14/15/16 Field Descriptions

Bit	Field	Type	Reset	Description
7-0	CUSTOM PAT [17:0]	R/W	00000000	This register is used for two purposes: • It sets the constant custom pattern starting from MSB • It sets the RAMP pattern increment step size. 00001: Ramp pattern for 18-bit ADC 00100: Ramp pattern for 16-bit ADC 10000: Ramp pattern for 14-bit ADC
7-5	TEST PAT B	R/W	000	Enables test pattern output mode for channel B (NOTE: The test pattern is set prior to the bit mapper and is based on native resolution of the ADC starting from the MSB). These work in either output format.
				000: Normal output mode (test pattern output disabled) 010: Ramp pattern: need to set proper increment using CUSTOM PAT register 011: Constant Pattern using CUSTOM PAT [17:0] in register 0x14/15/16. others: not used
4-2	TEST PAT A	R/W	000	Enables test pattern output mode for channel A (NOTE: The test pattern is set prior to the bit mapper and is based on native resolution of the ADC starting from the MSB). These work in either output format.
				000: Normal output mode (test pattern output disabled) 010: Ramp pattern: need to set proper increment using CUSTOM PAT register 011: Constant Pattern using CUSTOM PAT [17:0] in register 0x14/15/16. others: not used

Copyright © 2022 Texas Instruments Incorporated

Figure 8-63. Register 0x19

7	6	5	4	3	2	1	0
FCLK SRC	0	0	FCLK DIV	0	0	0	TOG FCLK
R/W-0	R/W-0	R/W-0	R/W-0	R/W-0	R/W-0	R/W-0	R/W-0

Table 8-23. Register 0x19 Field Descriptions

Bit	Field	Type	Reset	Description
7	FCLK SRC	R/W	0	User has to select if FCLK signal comes from ADC or from DDC block. Here real decimation is treated same as bypass mode 0: FCLK generated from ADC. FCLK SRC set to 0 for DDC bypass, real decimation mode and 1/2-w complex decimation mode. 1: FCLK generated from DDC block. In complex decimation mode only this bit needs to be set for 2-w and 1-w output interface mode but NOT for 1/2-w mode.
6-5	0	R/W	0	Must write 0
4	FCLK DIV	R/W	0	This bit needs to be set to 1 for 2-w output mode in bypass/real decimation mode only . 0: All output interface modes except 2-w decimation bypass and real decimation mode. 1: 2-w output interface mode for decimation bypass and real decimation.
3-1	0	R/W	0	Must write 0
0	TOG FCLK	R/W	0	This bit adjusts the FCLK signal appropriately for 1/2-wire mode where FCLK is stretched to cover channel A and channel B. This bit ONLY needs to be set in 1/2-wire mode with complex decimation mode. 0: all other modes. 1: FCLK for 1/2-wire complex decimation mode.

Table 8-24. Configuration of FCLK SRC and FCLK DIV Register Bits vs Serial Interface

BYPASS/DECIMATION	SERIAL INTERFACE	FCLK SRC	FCLK DIV	TOG FCLK
Decimation Bypass/ Real Decimation	2-wire	0	1	0
	1-wire	0	0	0
	1/2-wire	0	0	0
Complex Decimation	2-wire	1	0	0
	1-wire	1	0	0
	1/2-wire	0	0	1

Figure 8-64. Register 0x1A

7	6	5	4	3	2	1	0
0	LVDS ½ SWING	0	0	0	0	0	0
R/W-0	R/W-0	R/W-0	R/W-0	R/W-0	R/W-0	R/W-0	R/W-0

Table 8-25. Register 0x1A Field Descriptions

Bit	Field	Type	Reset	Description
7	0	R/W	0	Must write 0
6	LVDS ½ SWING	R/W	0	This bit reduces the LVDS output current from 3.5 mA to 1.75 mA which reduces power consumption. 0: Normal output current 3.5 mA 1: Reduced LVDS output current 1.75 mA
5-0	0	R/W	0	Must write 0

Copyright © 2022 Texas Instruments Incorporated

Figure 8-65. Register 0x1B

7	6	5	4	3	2	1	0
MAPPER EN	20B EN	BIT MAPPER RES			0	0	0
R/W-0	R/W-0	R/W-0	R/W-0	R/W-0	R/W-0	R/W-0	R/W-0

Table 8-26. Register 0x1B Field Descriptions

Bit	Field	Type	Reset	Description
7	MAPPER EN	R/W	0	This bit enables changing the resolution of the output (including output serialization factor) in bypass mode only. This bit does not need to be set for 20-bit resolution output. 0: Output bit mapper disabled. 1: Output bit mapper enabled.
6	20B EN	R/W	0	This bit enables 20-bit output resolution which can be useful for very high decimation settings so that quantization noise doesn't impact the ADC performance. 0: 20-bit output resolution disabled. 1: 20-bit output resolution enabled.
5-3	BIT MAPPER RES	R/W	000	Sets the output resolution using the bit mapper. MAPPER EN bit (D6) needs to be enabled when operating in bypass mode.. 000: 18 bit 001: 16 bit 010: 14 bit all others, n/a
2-0	0	R/W	0	Must write 0

Table 8-27. Register Settings for Output Bit Mapper vs Operating Mode

BYPASS/DECIMATION	OUTPUT RESOLUTION	MAPPER EN (D7)	BIT MAPPER RES (D5-D3)
Decimation Bypass	Resolution Change	1	000: 18-bit 001: 16-bit 010: 14-bit
Real Decimation	Resolution Change (default 18-bit)	0	
Complex Decimation		0	

Figure 8-66. Register 0x1E

7	6	5	4	3	2	1	0
0	0	0	0	LVDS DATA DEL		LVDS DCLK DEL	
R/W-0	R/W-0	R/W-0	R/W-0	R/W-0	R/W-0	R/W-0	R/W-0

Table 8-28. Register 0x1E Field Descriptions

Bit	Field	Type	Reset	Description
7-4	0	R/W	0	Must write 0
3-2	LVDS DATA DEL	R/W	00	These bits adjust the output timing of the SLVDS output data. 00: no delay 01: Data advanced by 50 ps 10: Data delayed by 50 ps 11: Data delayed by 100 ps
1-0	LVDS DCLK DEL	R/W	00	These bits adjust the output timing of the SLVDS DCLK output. 00: no delay 01: DCLK advanced by 50 ps 10: DCLK delayed by 50 ps 11: DCLK delayed by 100 ps

Copyright © 2022 Texas Instruments Incorporated

Figure 8-67. Register 0x20/21/22

7	6	5	4	3	2	1	0
FCLK PAT [7:0]							
FCLK PAT [15:8]							
0	SCR EN	0	0	FCLK PAT [19:16]			
R/W-0	R/W-0	R/W-0	R/W-0	R/W-0	R/W-0	R/W-0	R/W-0

Table 8-29. Register 0x20/21/22 Field Descriptions

Bit	Field	Type	Reset	Description
7-0	FCLK PAT [19:0]	R/W	0xFFC00	These bits can adjust the duty cycle of the FCLK. In decimation bypass mode the FCLK pattern gets adjusted automatically for the different output resolutions. Table 8-30 shows the proper FCLK pattern values for 1-wire and 1/2-wire in real/complex decimation.
6	SCR EN	R/W	0	This bit enables the output data scrambler. Digital bypass (0x24, D2) needs to be set as well. 0: Output scrambling disabled 1: Output scrambling enabled

Table 8-30. FCLK Pattern for different resolution based on interface

DECIMATION	OUTPUT RESOLUTION	2-WIRE	1-WIRE	1/2-WIRE
REAL DECIMATION	14-bit	Use Default	0xFE000	Use Default
	16-bit		0xFF000	
	18-bit		0xFF800	
	20-bit		0xFFC00	
COMPLEX DECIMATION	14-bit		0xFFFFF	0xFFFFF
	16-bit			
	18-bit			
	20-bit			

Figure 8-68. Register 0x24

7	6	5	4	3	2	1	0
0	0	CH AVG EN	DDC MUX		DIG BYP	DDC EN	0
R/W-0	R/W-0	R/W-0	R/W-0	R/W-0	R/W-0	R/W-0	R/W-0

Table 8-31. Register 0x24 Field Descriptions

Bit	Field	Type	Reset	Description
7-6	0	R/W	0	Must write 0
5	CH AVG EN	R/W	0	Averages the output of ADC channel A and channel B together. The DDC MUX has to be enabled and set to '11'. The decimation filter needs to be enabled and set to bypass (fullrate output) or decimation and DIG BYP set to 1. 0: Channel averaging feature disabled 1: Output of channel A and channel B are averaged: (A+B)/2.
4-3	DDC MUX	R/W	0	Configures DDC MUX in front of the decimation filter. 00: ADC channel A connected to DDC A; ADC Channel B connected to DDC B 01: ADC channel A connected to DDC A and DDC B. 10: ADC channel B connected to DDC A and DDC B. 11: Output of ADC averaging block (see CH AVG EN) given to DDC A and DDC B.
2	DIG BYP	R/W	0	This bit needs to be set to enable digital features block which includes decimation and scrambling. 0: Digital feature block bypassed - lowest latency 1: Data path includes digital features
1	DDC EN	R/W	0	Enables internal decimation filter for both channels 0: DDC disabled. 1: DDC enabled.
0	0	R/W	0	Must write 0

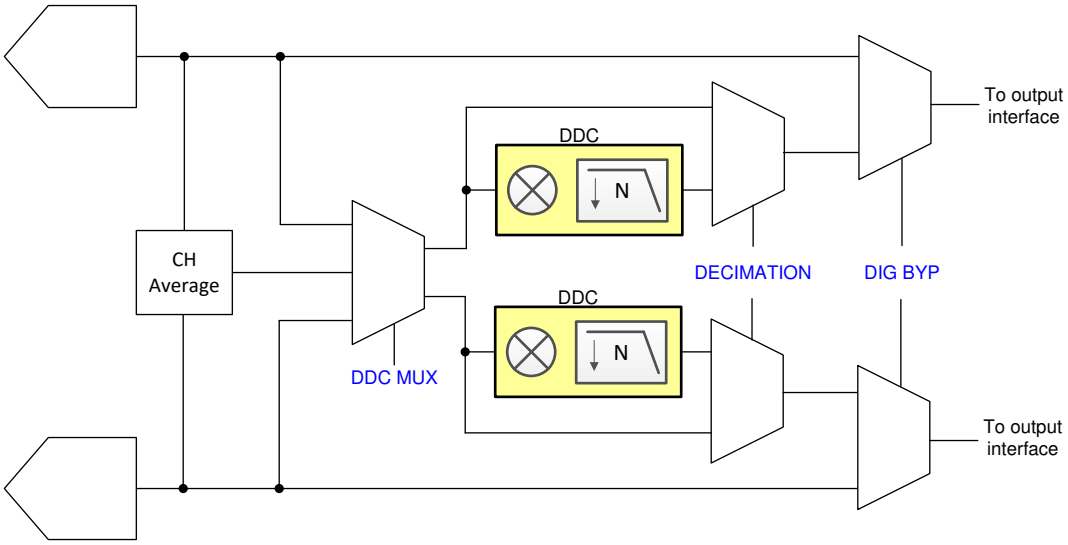

Figure 8-69. Register control for digital features

Copyright © 2022 Texas Instruments Incorporated

Figure 8-70. Register 0x25

7	6	5	4	3	2	1	0
DDC MUX EN	DECIMATION			REAL OUT	0	0	MIX PHASE
R/W-0	R/W-0	R/W-0	R/W-0	R/W-0	R/W-0	R/W-0	R/W-0

Table 8-32. Register 0x25 Field Descriptions

Bit	Field	Type	Reset	Description
7	DDC MUX EN	R/W	0	Enables the digital mux between ADCs and decimation filters. This bit is required for DDC mux settings in register 0x24 (D4, D3) to go into effect. 0: DDC mux disabled 1: DDC mux enabled
6-4	DECIMATION	R/W	000	Complex decimation setting. This applies to both channels. 000: Bypass mode (no decimation) 001: Decimation by 2 010: Decimation by 4 011: Decimation by 8 100: Decimation by 16 101: Decimation by 32 others: not used
3	REAL OUT	R/W	0	This bit selects real output decimation. This mode applies to both channels. In this mode, the decimation filter is a low pass filter and no complex mixing is performed to reduce power consumption. For maximum power savings the NCO in this case should be set to 0. 0: Complex decimation 1: Real decimation
2-1	0	R/W	0	Must write 0
0	MIX PHASE	R/W	0	This bit used to invert the NCO phase 0: NCO phase as is. 1: NCO phase inverted.

Figure 8-71. Register 0x26

7	6	5	4	3	2	1	0
MIX GAIN A		MIX RES A	FS/4 MIX A	MIX GAIN B		MIX RES B	FS/4 MIX B
R/W-0	R/W-0	R/W-0	R/W-0	R/W-0	R/W-0	R/W-0	R/W-0

Table 8-33. Register 0x26 Field Descriptions

Bit	Field	Type	Reset	Description
7-6	MIX GAIN A	R/W	00	This bit applies a 0, 3 or 6-dB digital gain to the output of digital mixer to compensate for the mixing loss for channel A. 00: no digital gain added 01: 3-dB digital gain added (should be enabled with real decimation) 10: 6-dB digital gain added (should be enabled with complex decimation) 11: not used
5	MIX RES A	R/W	0	Toggling this bit resets the NCO phase of channel A and loads the new NCO frequency. This bit does not self reset.
4	FS/4 MIX A	R/W	0	Enables FS/4 mixing for DDC A (complex decimation only). 0: FS/4 mixing disabled. 1: FS/4 mixing enabled.
3-2	MIX GAIN B	R/W	00	This bit applies a 0, 3 or 6-dB digital gain to the output of digital mixer to compensate for the mixing loss for channel B. 00: no digital gain added 01: 3-dB digital gain added (should be enabled with real decimation) 10: 6-dB digital gain added (should be enabled with complex decimation) 11: not used

Copyright © 2022 Texas Instruments Incorporated

Table 8-33. Register 0x26 Field Descriptions (continued)

Bit	Field	Type	Reset	Description
1	MIX RES B	R/W	0	Toggling this bit resets the NCO phase of channel B and loads the new NCO frequency. This bit does not self reset.
0	FS/4 MIX B	R/W	0	Enables FS/4 mixing for DDC B (complex decimation only). 0: FS/4 mixing disabled. 1: FS/4 mixing enabled.

Figure 8-72. Register 0x27

7	6	5	4	3	2	1	0
0	0	0	OP ORDER A	Q-DEL A	FS/4 MIX PH A	0	0
R/W-0	R/W-0	R/W-0	R/W-0	R/W-0	R/W-0	R/W-0	R/W-0

Table 8-34. Register 0x27 Field Descriptions

Bit	Field	Type	Reset	Description
7-5	0	R/W	0	Must write 0
4	OP ORDER A	R/W	0	Swaps the I and Q output order for channel A. See Table 8-35 for recommended settings. Only used with complex decimation. Set to 0 with real decimation. 0: Output order is I[n], Q[n] 1: Output order is swapped: Q[n], I[n]
3	Q-DEL A	R/W	0	This delays the Q-sample output of channel A by one. See Table 8-35 for recommended settings. Only used with complex decimation. Set to 0 with real decimation. 0: Output order is I[n], Q[n] 1: Q-sample is delayed by 1 sample: I[n], Q[n+1], I[n+1], Q[n+2]
2	FS/4 MIX PH A	R/W	0	Inverts the mixer phase for channel A when using FS/4 mixer 0: Mixer phase is non-inverted 1: Mixer phase is inverted
1-0	0	R/W	0	Must write 0

Table 8-35. OP-ORDER and Q-DELAY Register Settings for Complex Decimation

SLVDS INTERFACE	OP-ORDER	Q-DELAY
2-wire	1	0
1-wire	0	1
1/2-wire	1	1

Figure 8-73. Register 0x2A/B/C/D

7	6	5	4	3	2	1	0
NCO A [7:0]							
NCO A [15:8]							
NCO A [23:16]							
NCO A [31:24]							
R/W-0	R/W-0	R/W-0	R/W-0	R/W-0	R/W-0	R/W-0	R/W-0

Table 8-36. Register 0x2A/2B/2C/2D Field Descriptions

Bit	Field	Type	Reset	Description
7-0	NCO A [31:0]	R/W	0	Sets the 32 bit NCO value for decimation filter channel A. The NCO value is $f_{NCO} \times 2^{32}/F_S$ In real decimation mode these registers are automatically set to 0.

Copyright © 2022 Texas Instruments Incorporated

Figure 8-74. Register 0x2E

7	6	5	4	3	2	1	0
0	0	0	OP ORDER B	Q-DEL B	FS/4 MIX PH B	0	0
R/W-0	R/W-0	R/W-0	R/W-0	R/W-0	R/W-0	R/W-0	R/W-0

Table 8-37. Register 0x2E Field Descriptions

Bit	Field	Type	Reset	Description
7-5	0	R/W	0	Must write 0
4	OP ORDER B	R/W	0	Swaps the I and Q output order for channel B. See Table 8-35 for recommended settings. Only used with complex decimation. Set to 0 with real decimation. 0: Output order is I[n], Q[n] 1: Output order is swapped: Q[n], I[n]
3	Q-DEL B	R/W	0	This delays the Q-sample output of channel B by one. See Table 8-35 for recommended settings. Only used with complex decimation. Set to 0 with real decimation. 0: Output order is I[n], Q[n] 1: Q-sample is delayed by 1 sample: I[n], Q[n+1], I[n+1], Q[n+2]
2	FS/4 MIX PH B	R/W	0	Inverts the mixer phase for channel B when using FS/4 mixer 0: Mixer phase is non-inverted 1: Mixer phase is inverted
1-0	0	R/W	0	Must write 0

Figure 8-75. Register 0x31/32/33/34

7	6	5	4	3	2	1	0
NCO B [7:0]							
NCO B [15:8]							
NCO B [23:16]							
NCO B [31:24]							
R/W-0	R/W-0	R/W-0	R/W-0	R/W-0	R/W-0	R/W-0	R/W-0

Table 8-38. Register 0x31/32/33/34 Field Descriptions

Bit	Field	Type	Reset	Description
7-0	NCO B [31:0]	R/W	0	Sets the 32 bit NCO value for decimation filter channel B. The NCO value is $f_{NCO} \times 2^{32}/F_S$ In real decimation mode these registers are automatically set to 0.

Figure 8-76. Register 0x39..0x60

7	6	5	4	3	2	1	0
OUTPUT BIT MAPPER CHA							
R/W-0	R/W-0	R/W-0	R/W-0	R/W-0	R/W-0	R/W-0	R/W-0

Table 8-39. Register 0x39..0x60 Field Descriptions

Bit	Field	Type	Reset	Description
7-0	OUTPUT BIT MAPPER CHA	R/W	0	These registers are used to reorder the output data bus. See the *Output Bit Mapper* on how to program it.

Copyright © 2022 Texas Instruments Incorporated

Figure 8-77. Register 0x61..0x88

7	6	5	4	3	2	1	0
OUTPUT BIT MAPPER CHB							
R/W-0	R/W-0	R/W-0	R/W-0	R/W-0	R/W-0	R/W-0	R/W-0

Table 8-40. Register 0x61..0x88 Field Descriptions

Bit	Field	Type	Reset	Description
7-0	OUTPUT BIT MAPPER CHB	R/W	0	These registers are used to reorder the output data bus. See the *Output Bit Mapper* on how to program it.

Figure 8-78. Register 0x8F

7	6	5	4	3	2	1	0
0	0	0	0	0	0	FORMAT A	0
R/W-0	R/W-0	R/W-0	R/W-0	R/W-0	R/W-0	R/W-0	R/W-0

Table 8-41. Register 0x8F Field Descriptions

Bit	Field	Type	Reset	Description
7-2	0	R/W	0	Must write 0
1	FORMAT A	R/W	0	This bit sets the output data format for channel A. Digital bypass register bit (0x24, D2) needs to be enabled as well. 0: 2s complement 1: Offset binary
0	0	R/W	0	Must write 0

Copyright © 2022 Texas Instruments Incorporated

Figure 8-79. Register 0x92

7	6	5	4	3	2	1	0
0	0	0	0	0	0	FORMAT B	0
R/W-0	R/W-0	R/W-0	R/W-0	R/W-0	R/W-0	R/W-0	R/W-0

Table 8-42. Register 0x92 Field Descriptions

Bit	Field	Type	Reset	Description
7-2	0	R/W	0	Must write 0
1	FORMAT B	R/W	0	This bit sets the output data format for channel B. Digital bypass register bit (0x24, D2) needs to be enabled as well. 0: 2s complement 1: Offset binary
0	0	R/W	0	Must write 0

9 Application Information Disclaimer

Note

Information in the following applications sections is not part of the TI component specification, and TI does not warrant its accuracy or completeness. TI's customers are responsible for determining suitability of components for their purposes, as well as validating and testing their design implementation to confirm system functionality.

9.1 Typical Application

A spectrum analyzer is a typical frequency domain application for the ADC366x and its front end circuitry is very similar to several other systems such as software defined radio (SDR), sonar, radar or communications. Some applications require frequency coverage including DC or near DC (such as. sonar), so it is included in this example.

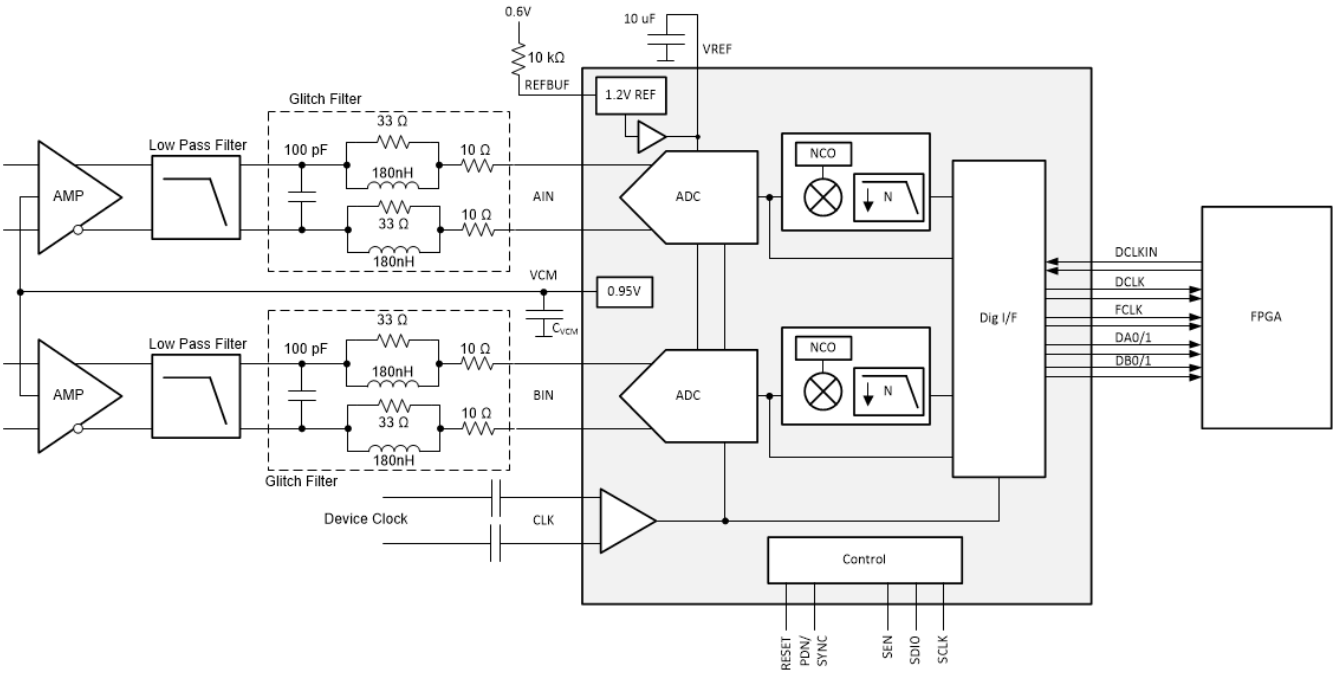

Figure 9-1. Typical configuration for a spectrum analyzer with DC support

9.1.1 Design Requirements

Frequency domain applications cover a wide range of frequencies from low input frequencies at or near DC in the 1st Nyquist zone to undersampling in higher Nyquist zones. If very low input frequency is supported then the input has to be DC coupled and the ADC driven by a fully differential amplifier (FDA). If low frequency support is not needed then AC coupling and use of a balun may be more suitable.

The internal reference is used since DC precision is not needed. However the ADC AC performance is highly dependent on the quality of the external clock source. If in-band interferers can be present then the ADC SFDR performance will be a key care about as well. A higher ADC sampling rate is desirable in order to relax the external anti-aliasing filter – an internal decimation filter can be used to reduce the digital output rate afterwards.

Table 9-1. Design key care-abouts

FEATURE	DESCRIPTION
Signal Bandwidth	DC to 20 MHz
Input Driver	Single ended to differential signal conversion and DC coupling

Copyright © 2022 Texas Instruments Incorporated

Table 9-1. Design key care-abouts (continued)

FEATURE	DESCRIPTION
Clock Source	External clock with low jitter

When designing the amplifier/filter driving circuit, the ADC input full-scale voltage needs to be taken into consideration. For example, the ADC366x input full-scale is 3.2Vpp. When factoring in ~ 1 dB for insertion loss of the filter, then the amplifier needs to deliver close to 3.6Vpp. The amplifier distortion performance will degrade with a larger output swing and considering the ADC common mode input voltage the amplifier may not be able to deliver the full swing. The ADC366x provides an output common mode voltage of 0.95V and the THS4541 for example can only swing within 250 mV of its negative supply. A unipolar 3.3 V amplifier power supply will thus limit the maximum voltage swing to ~ 2.8Vpp. Hence if a larger output swing is required (factoring in filter insertion loss) then a negative supply for the amplifier is needed in order to eliminate that limitation. Additionally input voltage protection diodes may be needed to protect the ADC from over-voltage events.

Table 9-2. Output voltage swing of THS4541 vs power supply

DEVICE	MIN OUTPUT VOLTAGE	MAX SWING WITH 3.3 V/ 0 V SUPPLY	MAX SWING WITH 3.3 V/ -1.0 V SUPPLY
THS4541	VS- + 250 mV	2.8 Vpp	6.8 Vpp

9.1.2 Detailed Design Procedure

9.1.2.1 Input Signal Path

Depending on desired input signal frequency range the THS4551 and THS4541 provide very good low power options to drive the ADC inputs. Table 9-3 provides a comparison between the THS4551 and THS4541 and the power consumption vs usable frequency trade off.

Table 9-3. Fully Differential Amplifier Options

DEVICE	CURRENT (IQ) PER CHANNEL	USABLE FREQUENCY RANGE
THS4561	0.8 mA	< 3 MHz
THS4551	1.4 mA	< 10 MHz
THS4541	10 mA	< 70 MHz

The low pass filter design (topology, filter order) is driven by the application itself. However, when designing the low pass filter, the optimum load impedance for the amplifier should be taken into consideration as well. Between the low pass filter and the ADC input the sampling glitch filter needs to added as well as shown in Section 8.3.1.2.1. In this example the DC - 30 MHz glitch filter is selected.

9.1.2.2 Sampling Clock

Applications operating with low input frequencies (such as DC to 20 MHz) typically are less sensitive to performance degradation due to clock jitter. The internal ADC aperture jitter improves with faster rise and fall times (i.e. square wave vs sine wave). Table 9-4 provides an overview of the estimated SNR performance of the ADC366x based on different amounts of jitter of the external clock source. The SNR is estimated based on ADC366x thermal noise of 82 dBFS and input signal at -1dBFS.

Table 9-4. ADC SNR performance across vs input frequency for different amounts of external clock jitter

INPUT FREQUENCY	$T_{J,EXT}$ = 100 fs	$T_{J,EXT}$ = 250 fs	$T_{J,EXT}$ = 500 fs	$T_{J,EXT}$ = 1 ps
5 MHz	82.0	81.9	81.8	81.5
10 MHz	81.9	81.8	81.4	80.2
20 MHz	81.6	81.2	80.1	77.2

Termination of the clock input should be considered for long clock traces.

9.1.2.3 Voltage Reference

The ADC366x is configured to internal reference operation by applying 0.6 V to the REFBUF pin.

Copyright © 2022 Texas Instruments Incorporated

9.1.3 Application Curves

The following FFT plots show the performance of THS4541 driving the ADC3663 operated at 65 MSPS with a full-scale input at -1 dBFS and input frequencies of 5, 10 and 20 MHz.

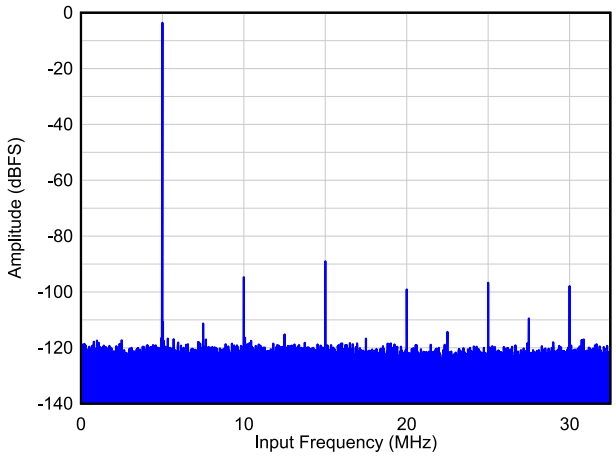

SNR = 81.0 dBFS, HD23 = 88 dBc, Non HD23 = 95 dBFS

Figure 9-2. Single Tone FFT at F_{IN} = 5 MHz

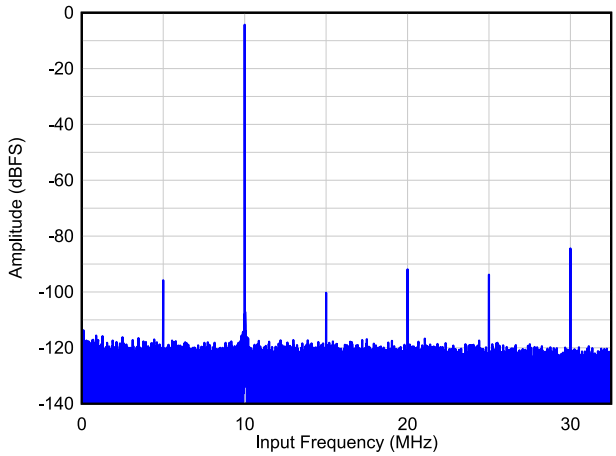

SNR = 80.4 dBFS, HD23 = 91 dBc, Non HD23 = 83 dBFS

Figure 9-3. Single Tone FFT at F_{IN} = 10 MHz

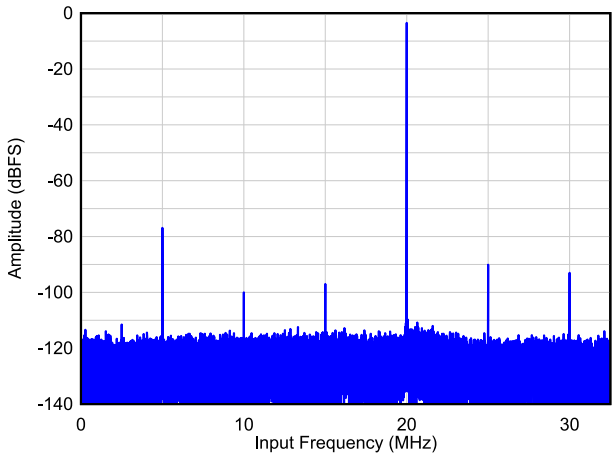

SNR = 77.2 dBFS, HD23 = 76 dBc, Non HD23 = 93 dBFS

Figure 9-4. Single Tone FFT at F_{IN} = 20 MHz

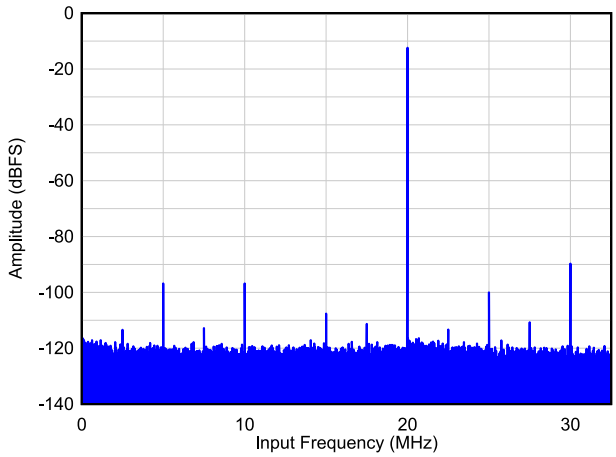

A_{IN} = -10 dBFS, SNR = 81.0 dBFS, HD23 = 87 dBc, Non HD23 = 90 dBFS

Figure 9-5. Single Tone FFT at F_{IN} = 20 MHz

Copyright © 2022 Texas Instruments Incorporated

9.2 Initialization Set Up

After power-up, the internal registers must be initialized to their default values through a hardware reset by applying a high pulse on the RESET pin, as shown in Figure 9-6.

1. Apply AVDD and IOVDD (no specific sequence required). After AVDD is applied the internal bandgap reference will power up and settle out in ~ 2ms.
2. Configure REFBUF pin (pull high or low even if configured via SPI later on) and apply the sampling clock.
3. Apply hardware reset. After hardware reset is released, the default registers are loaded from internal fuses and the internal power up capacitor calibration is initiated. The calibration takes approximately 200000 clock cycles.
4. Begin programming using SPI interface.

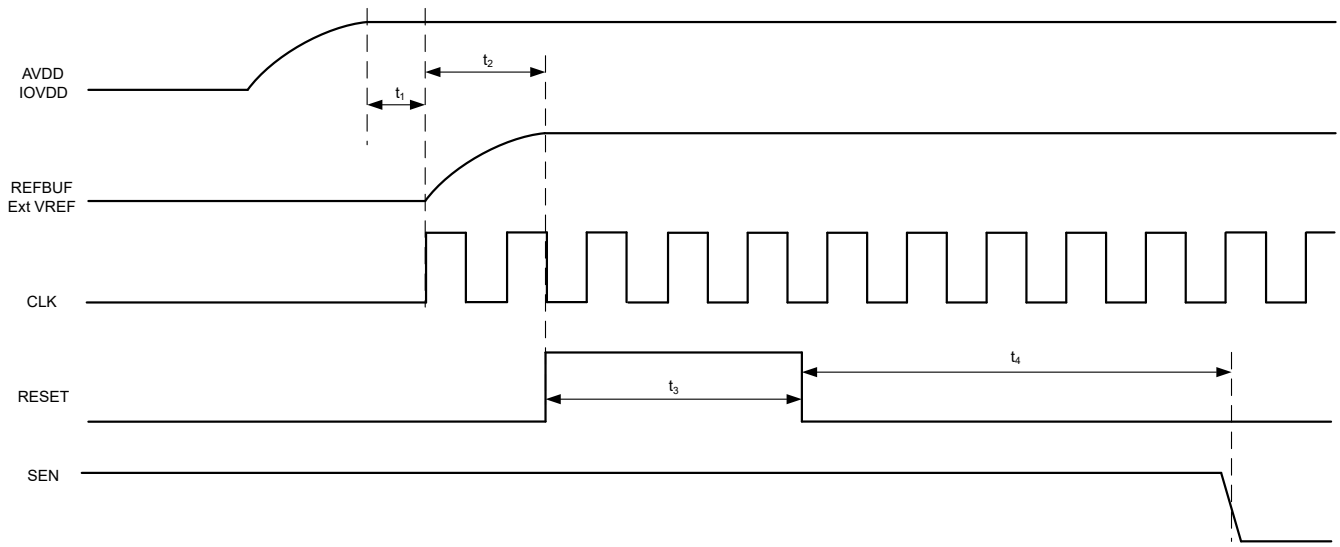

Figure 9-6. Initialization of serial registers after power up

Table 9-5. Power-up timing

		MIN	TYP	MAX	UNIT
t_1	Power-on delay: delay from power up to logic level of REFBUF pin	2			ms
t_2	Delay from REFBUF pin logic level to RESET rising edge	100			ns
t_3	RESET pulse width	1			us
t_4	Delay from RESET disable to SEN active	~ 200000			clock cycles

9.2.1 Register Initialization During Operation

If required, the serial interface registers can be cleared and reset to default settings during operation either:

- through a hardware reset or
- by applying a software reset. When using the serial interface, set the RESET bit (D0 in register address 0x00) high. This setting initializes the internal registers to the default values and then self-resets the RESET bit low. In this case, the RESET pin is kept low.

After hardware or software reset the wait time is also ~ 200000 clock cycles before the SPI registers can be programmed.

Copyright © 2022 Texas Instruments Incorporated

9.3 Power Supply Recommendations

The ADC366x requires two different power-supplies. The AVDD rail provides power for the internal analog circuits and the ADC itself while the IOVDD rail powers the digital interface and the internal digital circuits like decimation filter or output interface mapper. Power sequencing is not required.

The AVDD power supply must be low noise in order to achieve data sheet performance. In applications operating near DC, the 1/f noise contribution of the power supply needs to be considered as well. The ADC is designed for very good PSRR which aides with the power supply filter design.

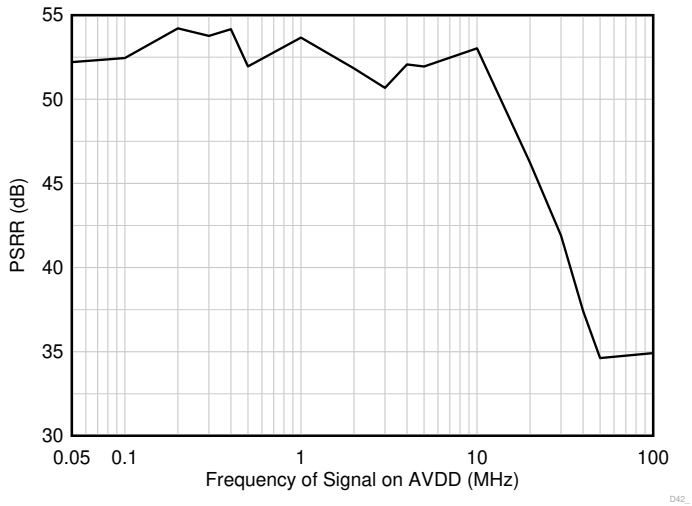

Figure 9-7. Power supply rejection ratio (PSRR) vs frequency

There are two recommended power-supply architectures:

1. 1. Step down using high-efficiency switching converters, followed by a second stage of regulation using a low noise LDO to provide switching noise reduction and improved voltage accuracy.
2. 2. Directly step down the final ADC supply voltage using high-efficiency switching converters. This approach provides the best efficiency, but care must be taken to ensure switching noise is minimized to prevent degraded ADC performance.

TI WEBENCH® Power Designer can be used to select and design the individual power-supply elements needed: see the WEBENCH® Power Designer

Recommended switching regulators for the first stage include the TPS62821, and similar devices.

Recommended low dropout (LDO) linear regulators include the TPS7A4701, TPS7A90, LP5901, and similar devices.

For the switch regulator only approach, the ripple filter must be designed with a notch frequency that aligns with the switching ripple frequency of the DC/DC converter. Note the switching frequency reported from WEBENCH® and design the EMI filter and capacitor combination to have the notch frequency centered as needed. Figure 9-8 and Figure 9-9 illustrate the two approaches.

AVDD and IOVDD supply voltages should not be shared in order to prevent digital switching noise from coupling into the analog signal chain.

Copyright © 2022 Texas Instruments Incorporated

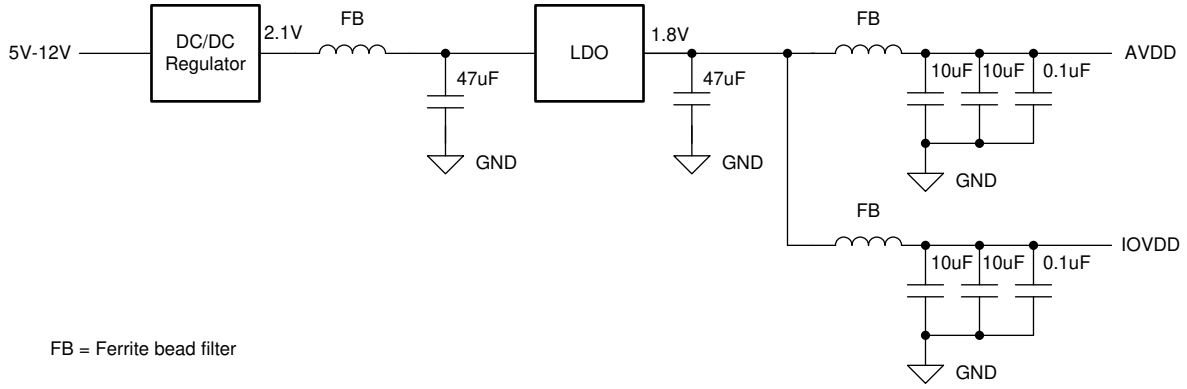

Figure 9-8. Example: LDO Linear Regulator Approach

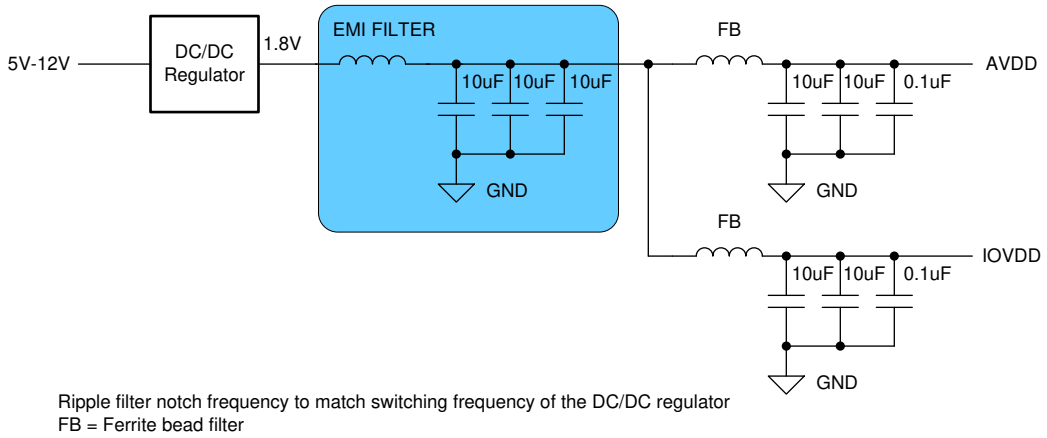

Figure 9-9. Example Switcher-Only Approach

9.4 Layout

9.4.1 Layout Guidelines

There are several critical signals which require specific care during board design:

1. Analog input and clock signals
   - Traces should be as short as possible and vias should be avoided where possible to minimize impedance discontinuities.
   - Traces should be routed using loosely coupled 100-Ω differential traces.
   - Differential trace lengths should be matched as close as possible to minimize phase imbalance and HD2 degradation.
2. Digital output interface
   - Traces should be routed using tightly coupled 100-Ω differential traces.
3. Voltage reference
   - The bypass capacitor should be placed as close to the device pins as possible and connected between VREF and REFGND – on top layer avoiding vias.
   - Depending on configuration an additional bypass capacitor between REFBUF and REFGND may be recommended and should also be placed as close to pins as possible on top layer.
4. Power and ground connections
   - Provide low resistance connection paths to all power and ground pins.
   - Use power and ground planes instead of traces.
   - Avoid narrow, isolated paths which increase the connection resistance.
   - Use a signal/ground/power circuit board stackup to maximize coupling between the ground and power plane.

9.4.2 Layout Example

The following screen shot shows the top layer of the ADC366x/368x EVM.

- Signal and clock inputs are routed as differential signals on the top layer avoiding vias.
- SLVDS output interface lanes are routed differential and length matched
- Bypass caps are close to the VREF pin on the top layer avoiding vias.

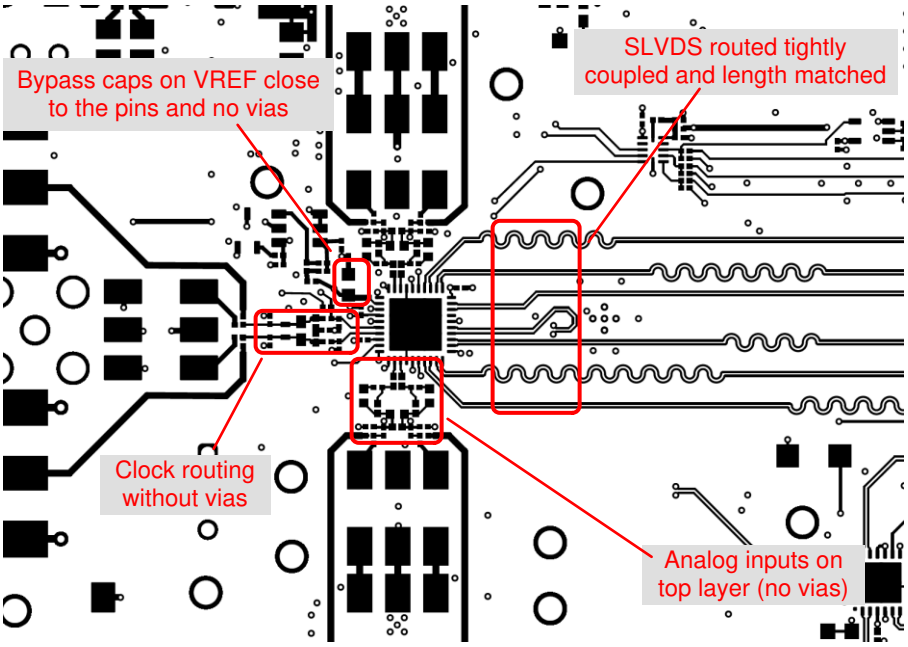

Figure 9-10. Layout example: top layer of ADC366x/368x EVM

Copyright © 2022 Texas Instruments Incorporated

10 Device and Documentation Support

10.1 Receiving Notification of Documentation Updates

To receive notification of documentation updates, navigate to the device product folder on ti.com. Click on *Subscribe to updates* to register and receive a weekly digest of any product information that has changed. For change details, review the revision history included in any revised document.

10.2 Support Resources

TI E2E™ support forums are an engineer's go-to source for fast, verified answers and design help — straight from the experts. Search existing answers or ask your own question to get the quick design help you need.

Linked content is provided "AS IS" by the respective contributors. They do not constitute TI specifications and do not necessarily reflect TI's views; see TI's Terms of Use.

10.3 Trademarks

TI E2E™ is a trademark of Texas Instruments.
All trademarks are the property of their respective owners.

10.4 Electrostatic Discharge Caution

This integrated circuit can be damaged by ESD. Texas Instruments recommends that all integrated circuits be handled with appropriate precautions. Failure to observe proper handling and installation procedures can cause damage.

ESD damage can range from subtle performance degradation to complete device failure. Precision integrated circuits may be more susceptible to damage because very small parametric changes could cause the device not to meet its published specifications.

10.5 Glossary

TI Glossary	This glossary lists and explains terms, acronyms, and definitions.

11 Mechanical, Packaging, and Orderable Information

The following pages include mechanical, packaging, and orderable information. This information is the most current data available for the designated devices. This data is subject to change without notice and revision of this document. For browser-based versions of this data sheet, refer to the left-hand navigation.

Copyright © 2022 Texas Instruments Incorporated

PACKAGING INFORMATION

Orderable part number	Status (1)	Material type (2)	Package | Pins	Package qty | Carrier	RoHS (3)	Lead finish/ Ball material (4)	MSL rating/ Peak reflow (5)	Op temp (°C)	Part marking (6)
ADC3661IRSBR	Active	Production	WQFN (RSB) | 40	3000 | LARGE T&R	Yes	NIPDAU	Level-3-260C-168 HR	-40 to 105	AZ3661
ADC3661IRSBR.A	Active	Production	WQFN (RSB) | 40	3000 | LARGE T&R	Yes	NIPDAU	Level-3-260C-168 HR	-40 to 105	AZ3661
ADC3661IRSBT	Active	Production	WQFN (RSB) | 40	250 | SMALL T&R	Yes	NIPDAU	Level-3-260C-168 HR	-40 to 105	AZ3661
ADC3661IRSBT.A	Active	Production	WQFN (RSB) | 40	250 | SMALL T&R	Yes	NIPDAU	Level-3-260C-168 HR	-40 to 105	AZ3661
ADC3662IRSBR	Active	Production	WQFN (RSB) | 40	3000 | LARGE T&R	Yes	NIPDAU	Level-3-260C-168 HR	-40 to 105	AZ3662
ADC3662IRSBR.A	Active	Production	WQFN (RSB) | 40	3000 | LARGE T&R	Yes	NIPDAU	Level-3-260C-168 HR	-40 to 105	AZ3662
ADC3662IRSBT	Active	Production	WQFN (RSB) | 40	250 | SMALL T&R	Yes	NIPDAU	Level-3-260C-168 HR	-40 to 105	AZ3662
ADC3662IRSBT.A	Active	Production	WQFN (RSB) | 40	250 | SMALL T&R	Yes	NIPDAU	Level-3-260C-168 HR	-40 to 105	AZ3662
ADC3663IRSBR	Active	Production	WQFN (RSB) | 40	3000 | LARGE T&R	Yes	NIPDAU	Level-3-260C-168 HR	-40 to 105	AZ3663
ADC3663IRSBR.A	Active	Production	WQFN (RSB) | 40	3000 | LARGE T&R	Yes	NIPDAU	Level-3-260C-168 HR	-40 to 105	AZ3663
ADC3663IRSBT	Active	Production	WQFN (RSB) | 40	250 | SMALL T&R	Yes	NIPDAU	Level-3-260C-168 HR	-40 to 105	AZ3663
ADC3663IRSBT.A	Active	Production	WQFN (RSB) | 40	250 | SMALL T&R	Yes	NIPDAU	Level-3-260C-168 HR	-40 to 105	AZ3663
ADC3663IRSBTG4	Active	Production	WQFN (RSB) | 40	250 | SMALL T&R	Yes	NIPDAU	Level-3-260C-168 HR	-40 to 105	AZ3663
ADC3663IRSBTG4.A	Active	Production	WQFN (RSB) | 40	250 | SMALL T&R	Yes	NIPDAU	Level-3-260C-168 HR	-40 to 105	AZ3663

(1) **Status:** For more details on status, see our product life cycle.

(2) **Material type:** When designated, preproduction parts are prototypes/experimental devices, and are not yet approved or released for full production. Testing and final process, including without limitation quality assurance, reliability performance testing, and/or process qualification, may not yet be complete, and this item is subject to further changes or possible discontinuation. If available for ordering, purchases will be subject to an additional waiver at checkout, and are intended for early internal evaluation purposes only. These items are sold without warranties of any kind.

(3) **RoHS values:** Yes, No, RoHS Exempt. See the TI RoHS Statement for additional information and value definition.

(4) **Lead finish/Ball material:** Parts may have multiple material finish options. Finish options are separated by a vertical ruled line. Lead finish/Ball material values may wrap to two lines if the finish value exceeds the maximum column width.

(5) **MSL rating/Peak reflow:** The moisture sensitivity level ratings and peak solder (reflow) temperatures. In the event that a part has multiple moisture sensitivity ratings, only the lowest level per JEDEC standards is shown. Refer to the shipping label for the actual reflow temperature that will be used to mount the part to the printed circuit board.

(6) **Part marking:** There may be an additional marking, which relates to the logo, the lot trace code information, or the environmental category of the part.

Multiple part markings will be inside parentheses. Only one part marking contained in parentheses and separated by a "~" will appear on a part. If a line is indented then it is a continuation of the previous line and the two combined represent the entire part marking for that device.

Important Information and Disclaimer: The information provided on this page represents TI's knowledge and belief as of the date that it is provided. TI bases its knowledge and belief on information provided by third parties, and makes no representation or warranty as to the accuracy of such information. Efforts are underway to better integrate information from third parties. TI has taken and continues to take reasonable steps to provide representative and accurate information but may not have conducted destructive testing or chemical analysis on incoming materials and chemicals. TI and TI suppliers consider certain information to be proprietary, and thus CAS numbers and other limited information may not be available for release.

In no event shall TI's liability arising out of such information exceed the total purchase price of the TI part(s) at issue in this document sold by TI to Customer on an annual basis.

TAPE AND REEL INFORMATION

REEL DIMENSIONS

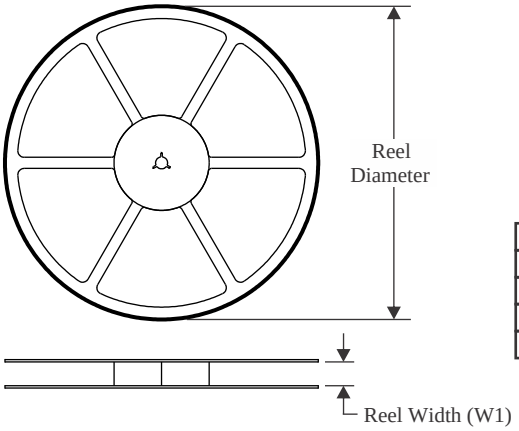

TAPE DIMENSIONS

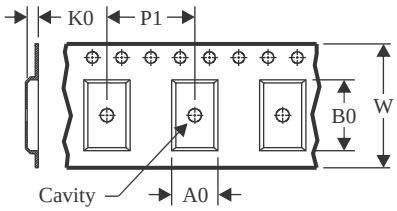

A0	Dimension designed to accommodate the component width
B0	Dimension designed to accommodate the component length
K0	Dimension designed to accommodate the component thickness
W	Overall width of the carrier tape
P1	Pitch between successive cavity centers

QUADRANT ASSIGNMENTS FOR PIN 1 ORIENTATION IN TAPE

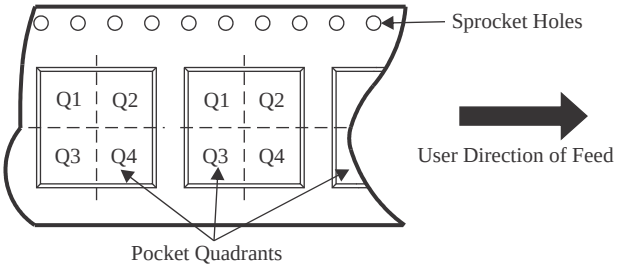

*All dimensions are nominal

Device	Package Type	Package Drawing	Pins	SPQ	Reel Diameter (mm)	Reel Width W1 (mm)	A0 (mm)	B0 (mm)	K0 (mm)	P1 (mm)	W (mm)	Pin1 Quadrant
ADC3661IRSBR	WQFN	RSB	40	3000	330.0	12.4	5.3	5.3	1.5	8.0	12.0	Q2
ADC3662IRSBR	WQFN	RSB	40	3000	330.0	12.4	5.3	5.3	1.5	8.0	12.0	Q2
ADC3663IRSBR	WQFN	RSB	40	3000	330.0	12.4	5.3	5.3	1.5	8.0	12.0	Q2

TAPE AND REEL BOX DIMENSIONS

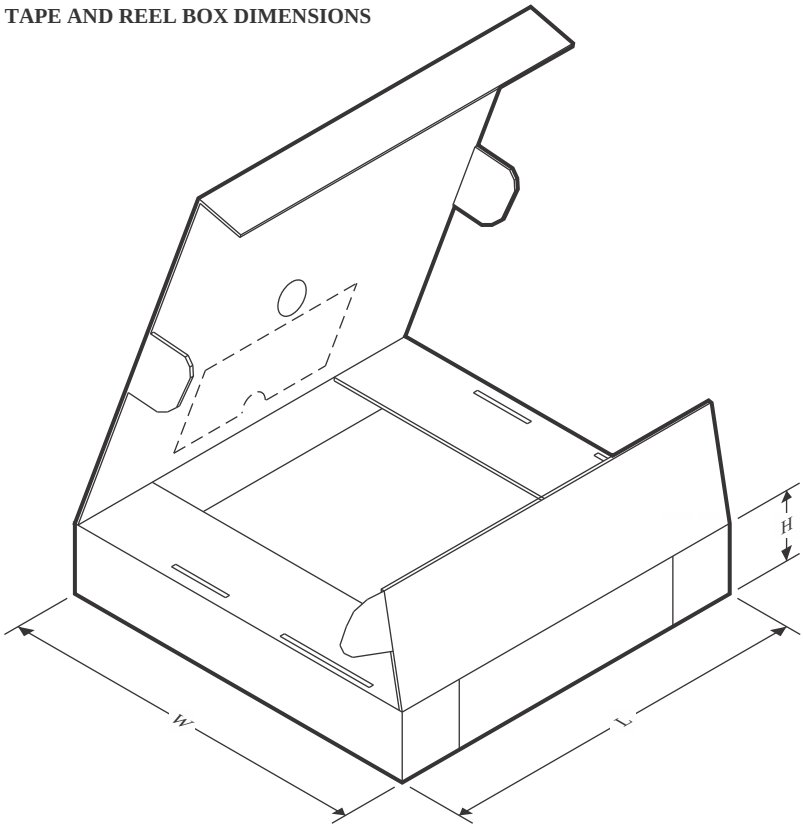

*All dimensions are nominal

Device	Package Type	Package Drawing	Pins	SPQ	Length (mm)	Width (mm)	Height (mm)
ADC3661IRSBR	WQFN	RSB	40	3000	350.0	350.0	43.0
ADC3662IRSBR	WQFN	RSB	40	3000	350.0	350.0	43.0
ADC3663IRSBR	WQFN	RSB	40	3000	350.0	350.0	43.0

RSB 40

WQFN - 0.8 mm max height

PLASTIC QUAD FLATPACK - NO LEAD

5 x 5 mm, 0.4 mm pitch

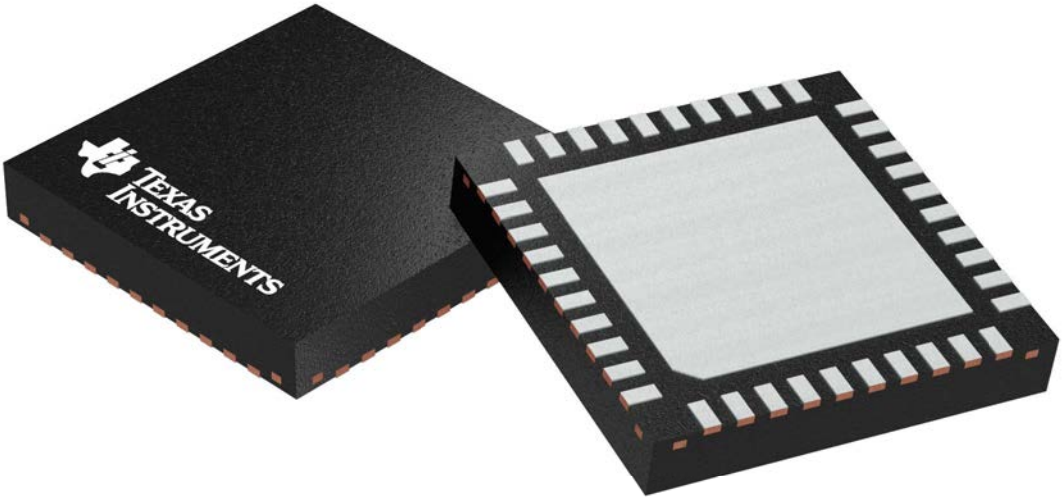

Images above are just a representation of the package family, actual package may vary.
Refer to the product data sheet for package details.

TEXAS INSTRUMENTS

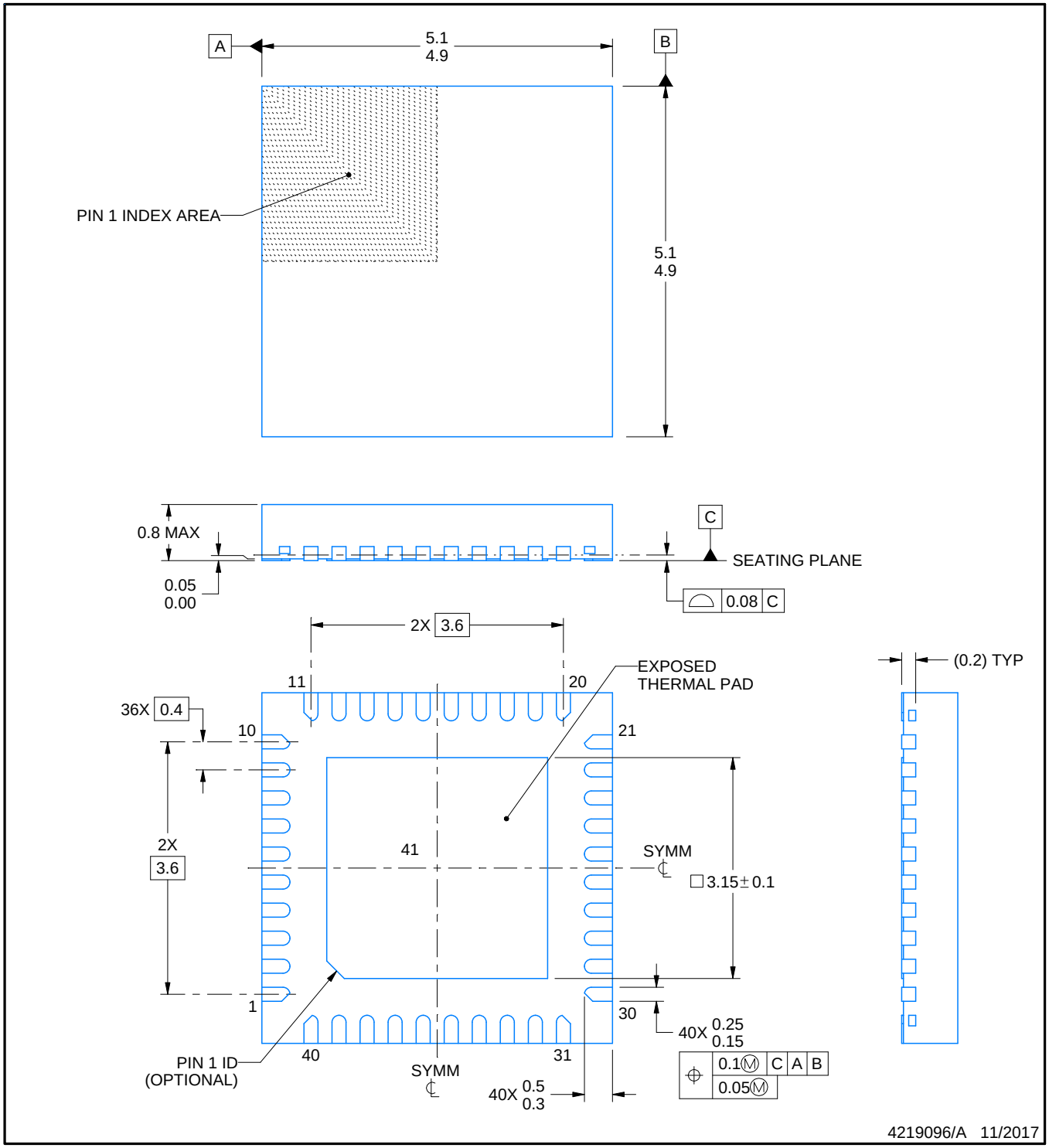

NOTES:

1. All linear dimensions are in millimeters. Any dimensions in parenthesis are for reference only. Dimensioning and tolerancing per ASME Y14.5M.
2. This drawing is subject to change without notice.
3. The package thermal pad must be soldered to the printed circuit board for thermal and mechanical performance.

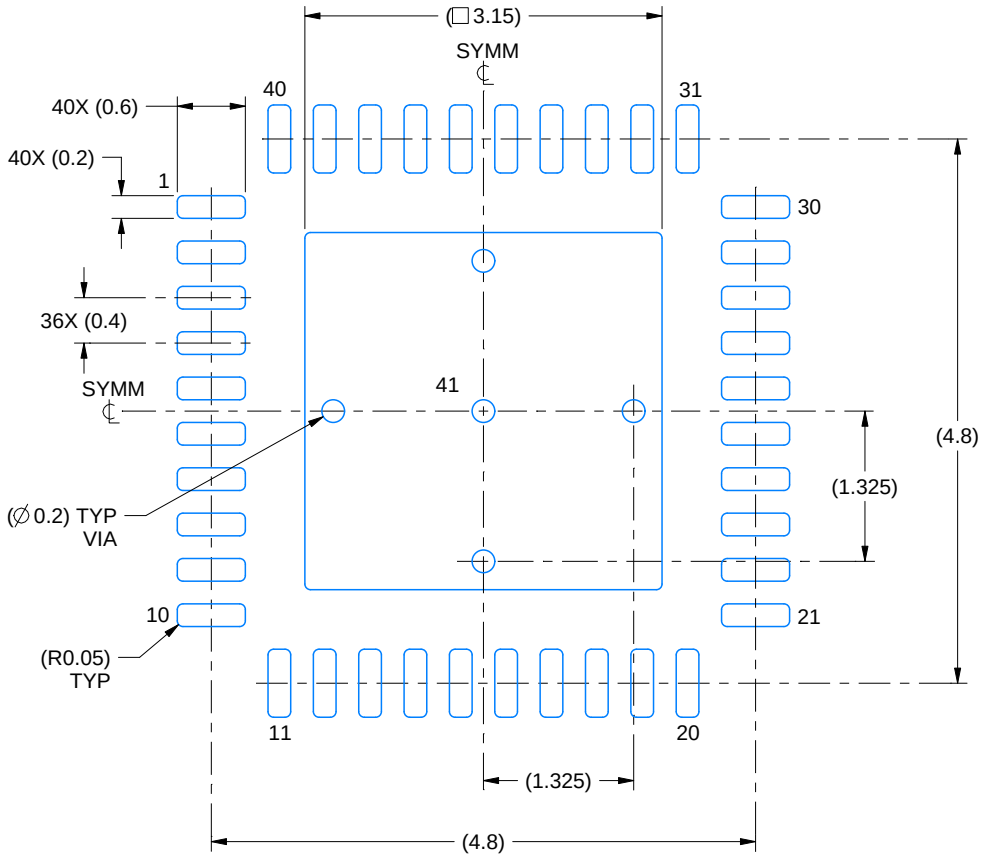

LAND PATTERN EXAMPLE
EXPOSED METAL SHOWN
SCALE:15X

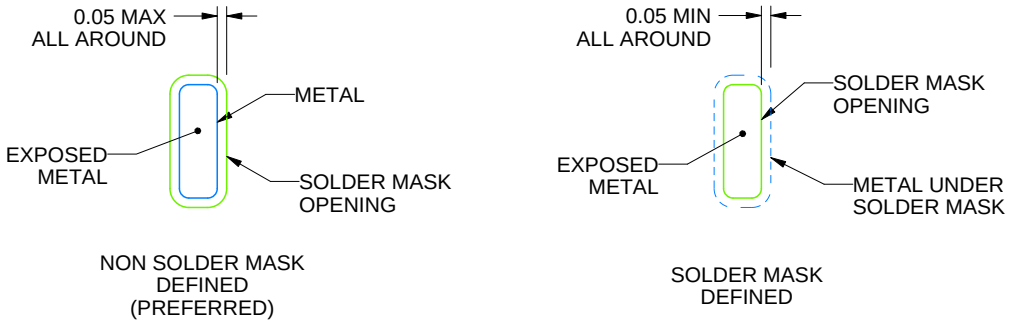

SOLDER MASK DETAILS

4219096/A 11/2017

NOTES: (continued)

4. This package is designed to be soldered to a thermal pad on the board. For more information, see Texas Instruments literature number SLUA271 (www.ti.com/lit/slua271).
5. Vias are optional depending on application, refer to device data sheet. If any vias are implemented, refer to their locations shown on this view. It is recommended that vias under paste be filled, plugged or tented.

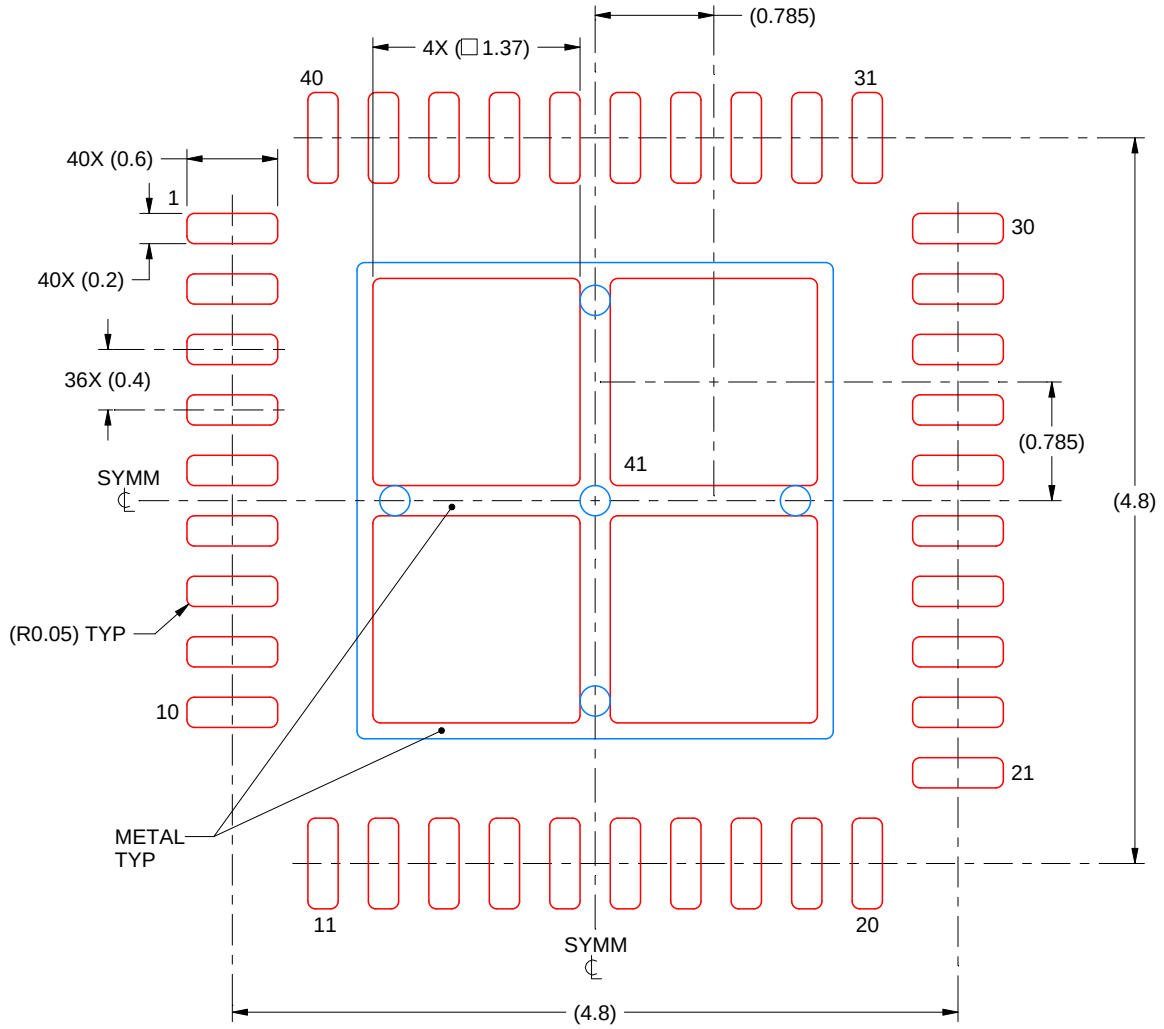

SOLDER PASTE EXAMPLE
BASED ON 0.1 mm THICK STENCIL

EXPOSED PAD 41
75% PRINTED SOLDER COVERAGE BY AREA UNDER PACKAGE
SCALE:20X

4219096/A 11/2017

NOTES: (continued)

6. Laser cutting apertures with trapezoidal walls and rounded corners may offer better paste release. IPC-7525 may have alternate design recommendations.

IMPORTANT NOTICE AND DISCLAIMER

TI PROVIDES TECHNICAL AND RELIABILITY DATA (INCLUDING DATA SHEETS), DESIGN RESOURCES (INCLUDING REFERENCE DESIGNS), APPLICATION OR OTHER DESIGN ADVICE, WEB TOOLS, SAFETY INFORMATION, AND OTHER RESOURCES “AS IS” AND WITH ALL FAULTS, AND DISCLAIMS ALL WARRANTIES, EXPRESS AND IMPLIED, INCLUDING WITHOUT LIMITATION ANY IMPLIED WARRANTIES OF MERCHANTABILITY, FITNESS FOR A PARTICULAR PURPOSE OR NON-INFRINGEMENT OF THIRD PARTY INTELLECTUAL PROPERTY RIGHTS.

These resources are intended for skilled developers designing with TI products. You are solely responsible for (1) selecting the appropriate TI products for your application, (2) designing, validating and testing your application, and (3) ensuring your application meets applicable standards, and any other safety, security, regulatory or other requirements.

These resources are subject to change without notice. TI grants you permission to use these resources only for development of an application that uses the TI products described in the resource. Other reproduction and display of these resources is prohibited. No license is granted to any other TI intellectual property right or to any third party intellectual property right. TI disclaims responsibility for, and you will fully indemnify TI and its representatives against, any claims, damages, costs, losses, and liabilities arising out of your use of these resources.

TI’s products are provided subject to TI’s Terms of Sale or other applicable terms available either on ti.com or provided in conjunction with such TI products. TI’s provision of these resources does not expand or otherwise alter TI’s applicable warranties or warranty disclaimers for TI products.

TI objects to and rejects any additional or different terms you may have proposed.

Mailing Address: Texas Instruments, Post Office Box 655303, Dallas, Texas 75265
Copyright © 2025, Texas Instruments Incorporated