25-W DIGITAL AUDIO POWER AMPLIFIER WITH EQ AND DRC

Check for Samples: TAS5715

FEATURES

- **Audio Input/Output**
  - **25-W Into an 8-Ω Load From an 18-V Supply**
  - **50-W Support in PBTL Mode With 4-Ω Load**
  - **Wide PVDD Range, From 8 V to 26 V**
  - **Efficient Class-D Operation Eliminates Need for Heatsinks**
  - **Requires Only 3.3 V and PVDD**
  - **One Serial Audio Input (Two Audio Channels)**
  - **I^2C Address Selection via PIN (Chip Select)**
  - **Supports 8-kHz to 48-kHz Sample Rate (LJ/RJ/I^2S)**
  - **Headphone PWM Outputs**
  - **Dedicated Pin for External Headphone-Amplifier Shutdown**
  - **Single-Filter PBTL Support**
- **Audio/PWM Processing**
  - **Independent Channel Volume Controls With 24-dB to Mute**
  - **Independent Headphone Volume**
  - **Programmable Two-Band Dynamic Range Control**
  - **Up to Eight User-Programmable Biquads per Channel**
  - **Programmable Coefficients for DRC Filters**
  - **DC Blocking Filters and PWM DC Detect**
  - **CRC Checksum to Detect Biquad Coefficient Corruption**
- **General Features**
  - **Serial Control Interface Operational Without MCLK**
  - **Factory-Trimmed Internal Oscillator for Automatic Rate Detection**
  - **Surface Mount, 48-Pin, 7-mm × 7-mm HTQFP Package**
  - **Thermal and Short-Circuit Protection**
- **Benefits**
  - **EQ: Speaker Equalization Improves Audio Performance**
  - **DRC: Automatic Gain Limiter. Can Be Used As Power Limiter. Enables Speaker Protection, Easy Listening**
  - **Two-Band DRC: Set Two Different Thresholds for Low- and High-Frequency Content**
  - **Autobank Switching: Preload Coefficients for Different Sample Rates. No Need to Write New Coefficients to the Part When Sample Rate Changes**
  - **Autodetect: Automatically Detects Sample-Rate Changes. No Need for External Microprocessor Intervention**
  - **Single-Filter PBTL Support Reduces BOM Cost**
  - **Thgermal Dissipation, Improving System Stability**

DESCRIPTION

The TAS5715 is a 25-W, efficient, digital audio-power amplifier for driving stereo bridge-tied speakers. One serial data input allows processing of up to two discrete audio channels and seamless integration to most digital audio processors and MPEG decoders. The device accepts a wide range of input data and data rates. A fully programmable data path routes these channels to the internal speaker drivers.

The TAS5715 is a slave-only device receiving all clocks from external sources. The TAS5715 operates with a PWM carrier between a 384-kHz switching rate and a 352-KHz switching rate, depending on the input sample rate. Oversampling combined with a fourth-order noise shaper provides a flat noise floor and excellent dynamic range from 20 Hz to 20 kHz.

Please be aware that an important notice concerning availability, standard warranty, and use in critical applications of Texas Instruments semiconductor products and disclaimers thereto appears at the end of this data sheet.

PRODUCTION DATA information is current as of publication date. Products conform to specifications per the terms of the Texas Instruments standard warranty. Production processing does not necessarily include testing of all parameters.

Copyright © 2010, Texas Instruments Incorporated

These devices have limited built-in ESD protection. The leads should be shorted together or the device placed in conductive foam during storage or handling to prevent electrostatic damage to the MOS gates.

SIMPLIFIED APPLICATION DIAGRAM

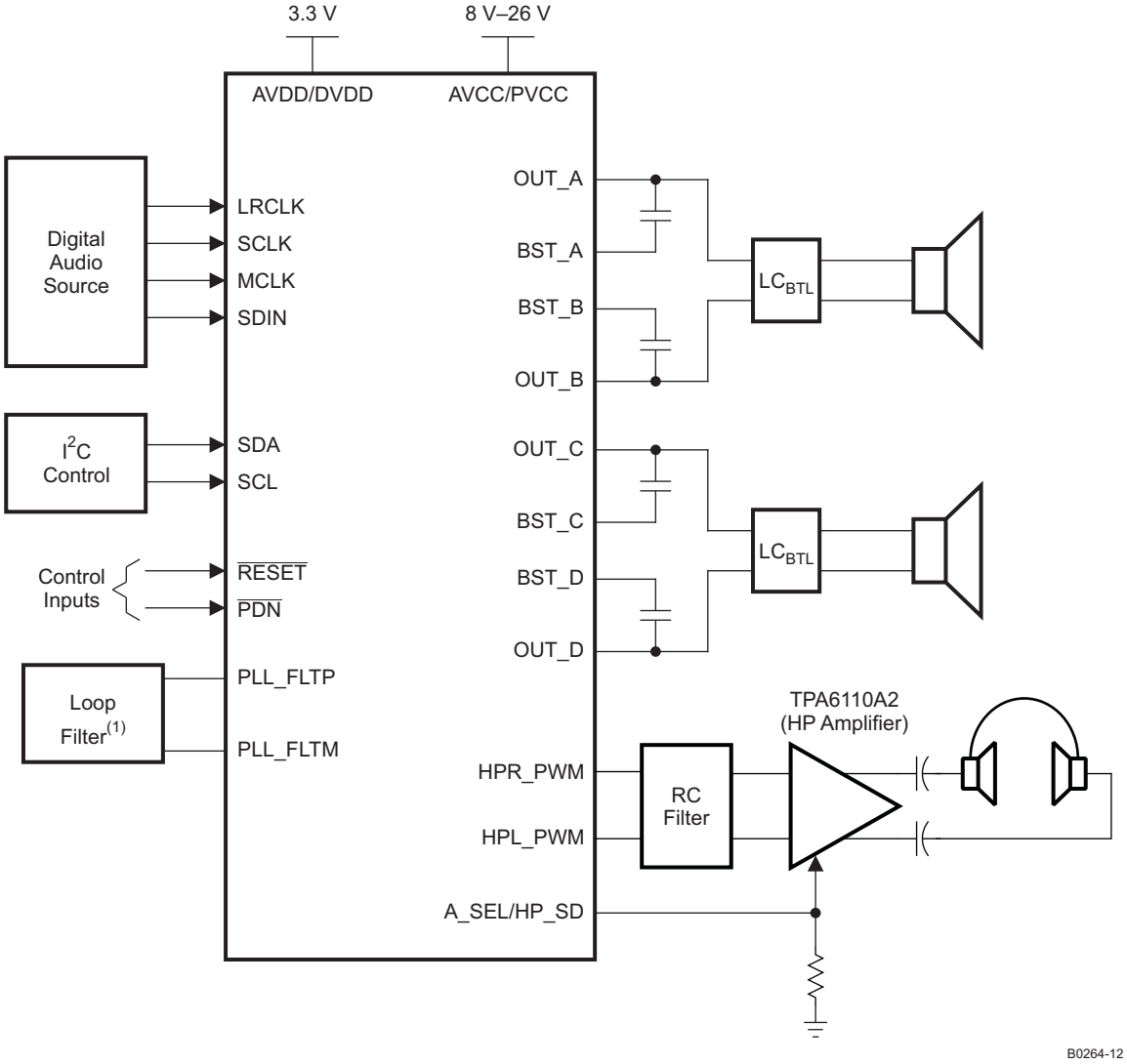

(1)See the TAS5715 User's Guide for loop-filter values.

Copyright © 2010, Texas Instruments Incorporated

FUNCTIONAL VIEW

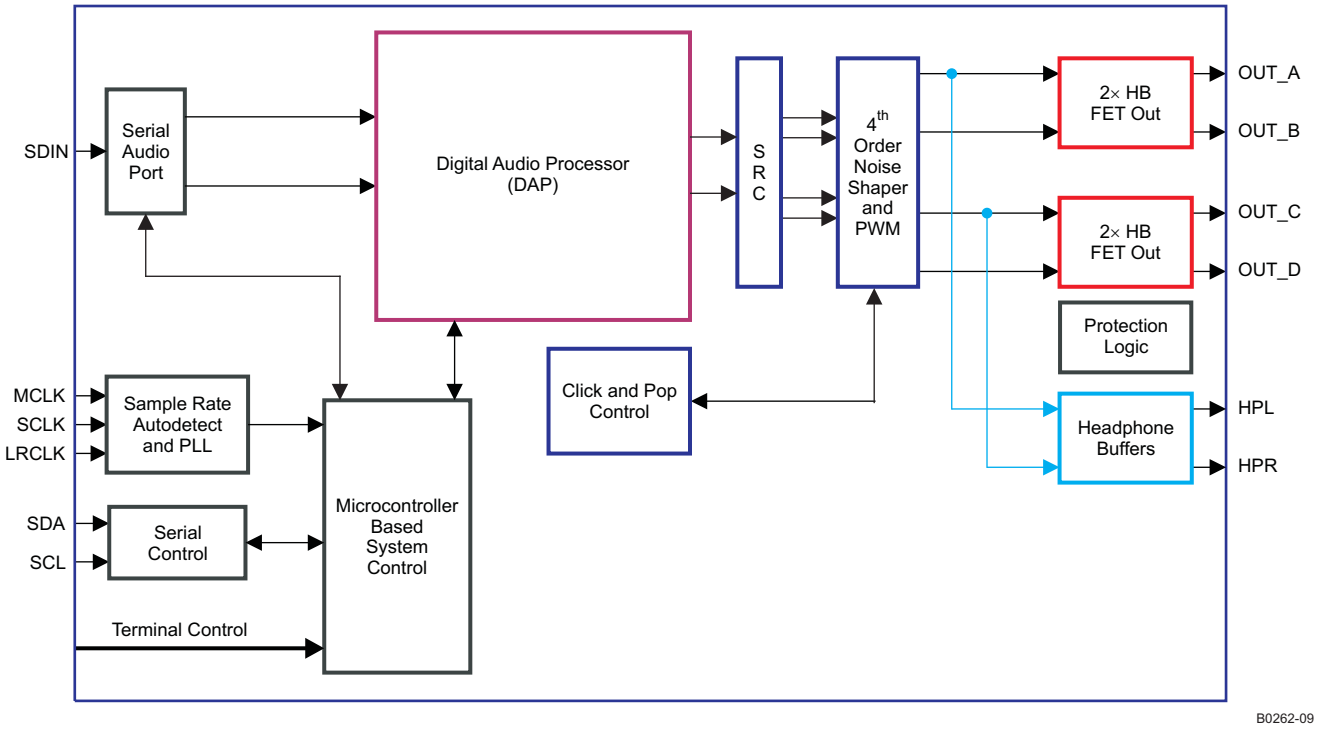

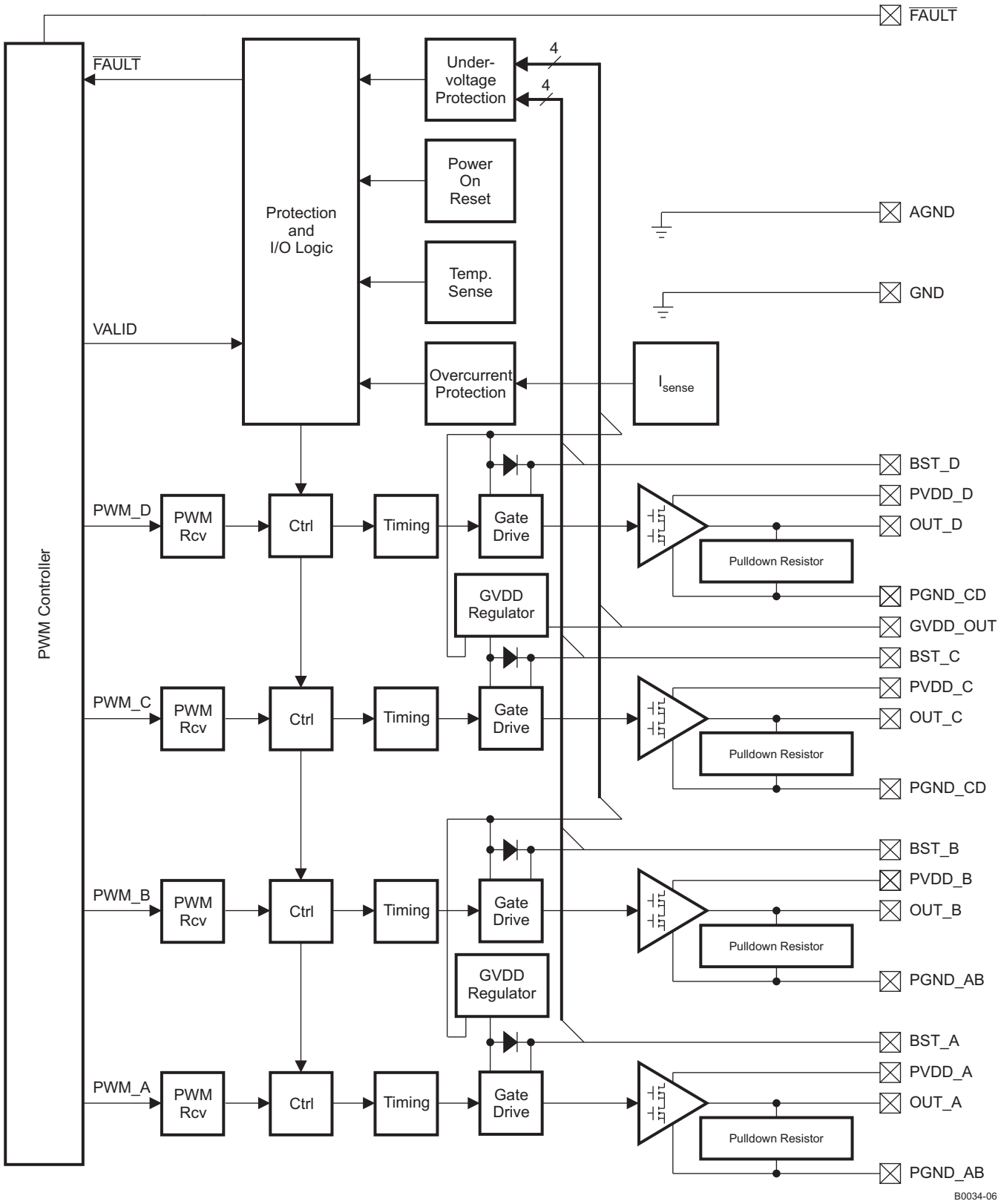

Figure 1. Power Stage Functional Block Diagram

Copyright © 2010, Texas Instruments Incorporated

DAP Process Structure

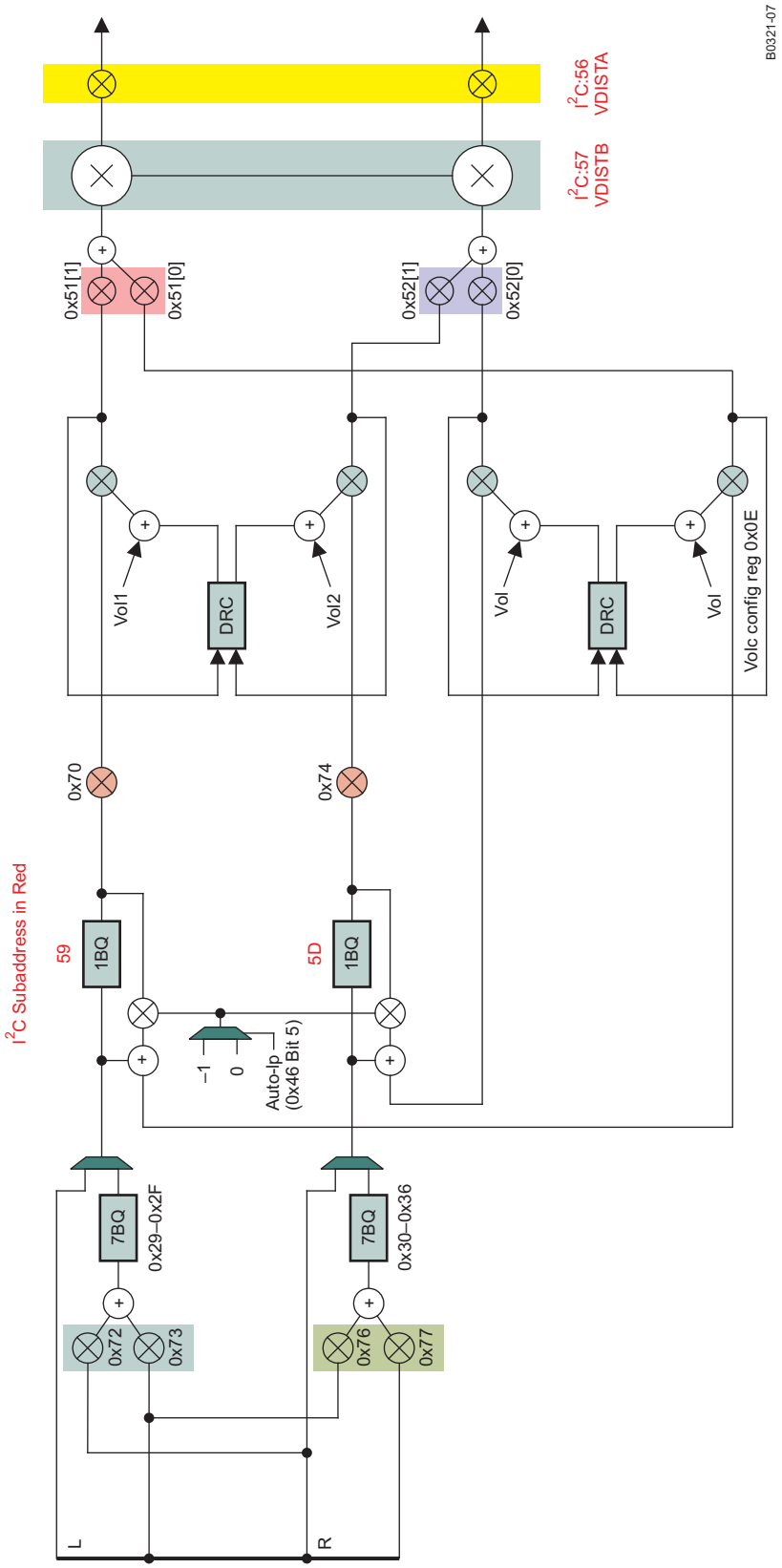

DEVICE INFORMATION

PIN ASSIGNMENT

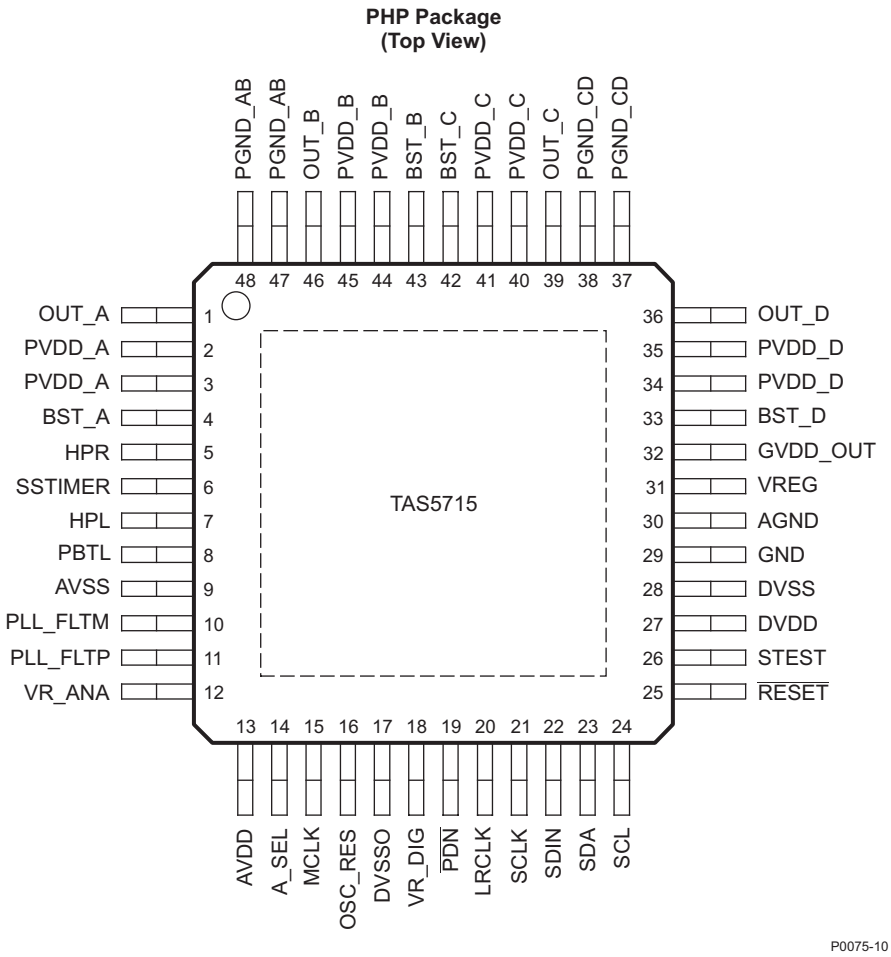

PIN FUNCTIONS

PIN		TYPE(1)	5-V TOLERANT	TERMINATION(2)	DESCRIPTION
NAME	NO.				
AGND	30	P			Analog ground for power stage
$\overline{\text{A_SEL}}$	14	DIO			This pin is monitored on the rising edge of $\overline{\text{RESET}}$. A value of 0 makes the I^2C dev address 0x54 and a value of 1 makes it 0x56. This pin can be re-used after reset as external HP amplifer shutdown signal.
AVDD	13	P			3.3-V analog power supply
AVSS	9	P			Analog 3.3-V supply ground
BST_A	4	P			High-side bootstrap supply for half-bridge A
BST_B	43	P			High-side bootstrap supply for half-bridge B
BST_C	42	P			High-side bootstrap supply for half-bridge C
BST_D	33	P			High-side bootstrap supply for half-bridge D
DVDD	27	P			3.3-V digital power supply
DVSSO	17	P			Oscillator ground
DVSS	28	P			Digital ground

(1) TYPE: A = analog; D = 3.3-V digital; P = power/ground/decoupling; I = input; O = output
(2) All pullups are weak pullups and all pulldowns are weak pulldowns. The pullups and pulldowns are included to assure proper input logic levels if the pins are left unconnected (pullups → logic 1 input; pulldowns → logic 0 input).

Copyright © 2010, Texas Instruments Incorporated

PIN FUNCTIONS (continued)

PIN		TYPE[1]	5-V TOLERANT	TERMINATION[2]	DESCRIPTION
NAME	NO.				
GND	29	P			Analog ground for power stage
GVDD_OUT	32	P			Gate drive internal regulator output
HPL	7	AO			Headphone PWM out (HPL) (leave floating if unused)
HPR	5	AO			Headphone PWM out (HPR) (leave floating if unused)
LRCLK	20	DI	5-V	Pulldown	Input serial audio data left/right clock (sample rate clock)
MCLK	15	DI	5-V	Pulldown	Master clock input
OSC_RES	16	AO			Oscillator trim resistor. Connect an 18-kΩ 1% resistor to DVSSO.
OUT_A	1	O			Output, half-bridge A
OUT_B	46	O			Output, half-bridge B
OUT_C	39	O			Output, half-bridge C
OUT_D	36	O			Output, half-bridge D
PBTL	8	DI			Low means BTL or SE mode; high means PBTL mode. Information goes directly to power stage.
$\overline{\text{PDN}}$	19	DI	5-V	Pullup	Power down, active-low. $\overline{\text{PDN}}$ prepares the device for loss of power supplies by shutting down the Noise Shaper and initiating PWM stop sequence.
PGND_AB	47, 48	P			Power ground for half-bridges A and B
PGND_CD	37, 38	P			Power ground for half-bridges C and D
PLL_FLTM	10	AO			PLL negative loop filter terminal
PLL_FLTP	11	AO			PLL positive loop filter terminal
PVDD_A	2, 3	P			Power supply input for half-bridge output A
PVDD_B	44, 45	P			Power supply input for half-bridge output B
PVDD_C	40, 41	P			Power supply input for half-bridge output C
PVDD_D	34, 35	P			Power supply input for half-bridge output D
$\overline{\text{RESET}}$	25	DI	5-V	Pullup	Reset, active-low. A system reset is generated by applying a logic low to this pin. $\overline{\text{RESET}}$ is an asynchronous control signal that restores the DAP to its default conditions, and places the PWM in the hard mute state (tristated).
SCL	24	DI	5-V		I^2C serial control clock input
SCLK	21	DI	5-V	Pulldown	Serial audio data clock (shift clock). SCLK is the serial audio port input data bit clock.
SDA	23	DIO	5-V		I^2C serial control data interface input/output
SDIN	22	DI	5-V	Pulldown	Serial audio data input. SDIN supports three discrete (stereo) data formats.
SSTIMER	6	AI			Controls ramp time of OUT_x to minimize pop. Leave this pin floating for BD mode. Requires capacitor of 2.2 nF to GND in AD mode. The capacitor determines the ramp time.
STEST	26	DI			Factory test pin. Connect directly to DVSS.
VR_ANA	12	P			Internally regulated 1.8-V analog supply voltage. This pin must not be used to power external devices.
VR_DIG	18	P			Internally regulated 1.8-V digital supply voltage. This pin must not be used to power external devices.
VREG	31	P			Digital regulator output. Not to be used for powering external circuitry.

Copyright © 2010, Texas Instruments Incorporated

ABSOLUTE MAXIMUM RATINGS

over operating free-air temperature range (unless otherwise noted) (1)

		VALUE	UNIT
Supply voltage	DVDD, AVDD	–0.3 to 3.6	V
	PVDD_x	–0.3 to 30	V
Input voltage	3.3-V digital input	–0.5 to DVDD + 0.5	V
	5-V tolerant(2) digital input (except MCLK)	–0.5 to DVDD + 2.5(3)	V
	5-V tolerant MCLK input	–0.5 to AVDD + 2.5(3)	V
OUT_x to PGND_x		32(4)	V
BST_x to PGND_x		43(4)	V
Input clamp current, I_{IK}		±20	mA
Output clamp current, I_{OK}		±20	mA
Operating free-air temperature		0 to 85	°C
Operating junction temperature range		0 to 150	°C
Storage temperature range, T_{stg}		–40 to 125	°C

(1) Stresses beyond those listed under *absolute ratings* may cause permanent damage to the device. These are stress ratings only and functional operation of the device at these or any other conditions beyond those indicated under *recommended operation conditions* are not implied. Exposure to absolute-maximum conditions for extended periods may affect device reliability.
(2) 5-V tolerant inputs are $\overline{PDN}$, $\overline{RESET}$, SCLK, LRCLK, MCLK, SDIN, SDA, and SCL.
(3) Maximum pin voltage should not exceed 6.0V
(4) DC voltage + peak ac waveform measured at the pin should be below the allowed limit for all conditions.

DISSIPATION RATINGS(1)

PACKAGE	DERATING FACTOR ABOVE T_A = 25°C	T_A ≤ 25°C POWER RATING	T_A = 45°C POWER RATING	T_A = 70°C POWER RATING
7-mm × 7-mm HTQFP	20 mW/°C	2 W	1.6 W	1.1 W

(1) This data was taken using 1 oz trace and copper pad that is soldered directly to a JEDEC standard high-k PCB. The thermal pad must be soldered to a thermal land on the printed-circuit board. See TI Technical Briefs SLMA002 for more information about using the HTQFP thermal pad

RECOMMENDED OPERATING CONDITIONS

			MIN	NOM	MAX	UNIT
	Digital/analog supply voltage	DVDD, AVDD	3	3.3	3.6	V
	Half-bridge supply voltage	PVDD_x	8		26	V
V_{IH}	High-level input voltage	5-V tolerant	2			V
V_{IL}	Low-level input voltage	5-V tolerant			0.8	V
T_A	Operating ambient temperature range		0		85	°C
T_J (1)	Operating junction temperature range		0		125	°C
R_L (BTL)	Load impedance	Output filter: L = 15 μH, C = 680 nF.	4	8		Ω
L_O (BTL)	Output-filter inductance	Minimum output inductance under short-circuit condition	10			μH

(1) Continuous operation above the recommended junction temperature may result in reduced reliability and/or lifetime of the device.

PWM OPERATION AT RECOMMENDED OPERATING CONDITIONS

PARAMETER	TEST CONDITIONS	VALUE	UNIT
Output sample rate	11.025/22.05/44.1-kHz data rate ±1%	352.8	kHz
	48/24/12/8/16/32-kHz data rate ±1%	384	

Copyright © 2010, Texas Instruments Incorporated

PLL INPUT PARAMETERS AND EXTERNAL FILTER COMPONENTS

PARAMETER		TEST CONDITIONS	MIN	TYP	MAX	UNIT
f_{MCLKI}	MCLK Frequency		2.8224		12.288	MHz
	MCLK duty cycle		40%	50%	60%	
t_r / $t_{f(MCLK)}$	Rise/fall time for MCLK				5	ns
	LRCLK allowable drift before LRCLK reset				4	MCLKs
	External PLL filter capacitor C1	SMD 0603 Y5V		47		nF
	External PLL filter capacitor C2	SMD 0603 Y5V		4.7		nF
	External PLL filter resistor R	SMD 0603, metal film		470		Ω

ELECTRICAL CHARACTERISTICS

DC Characteristics

TA = 25°, PVCC_x = 18 V, DVDD = AVDD = 3.3 V, R_L= 8 Ω, BTL AD Mode, f_S = 48 KHz (unless otherwise noted)

PARAMETER			TEST CONDITIONS	MIN	TYP	MAX	UNIT
V_{OH}	High-level output voltage	$\overline{\text{A_SEL}}$ and SDA	I_{OH} = –4 mA DVDD = 3 V	2.4			V
V_{OL}	Low-level output voltage	$\overline{\text{A_SEL}}$ and SDA	I_{OL} = 4 mA DVDD = 3 V			0.5	V
I_{IL}	Low-level input current		$V_I < V_{IL}$; DVDD = AVDD = 3.6V			75	µA
I_{IH}	High-level input current		$V_I > V_{IH}$; DVDD = AVDD = 3.6V			75 (1)	µA
I_{DD}	3.3 V supply current	3.3 V supply voltage (DVDD, AVDD)	Normal mode		56	85	mA
			Reset ($\overline{\text{RESET}}$ = low, $\overline{\text{PDN}}$ = high)		26	40	
I_{PVDD}	Supply current	No load (PVDD_x)	Normal mode		40	85	mA
			Reset ($\overline{\text{RESET}}$ = low, $\overline{\text{PDN}}$ = high)		5	13	
$r_{DS(on)}$ (2)	Drain-to-source resistance, LS	T_J = 25°C, includes metallization resistance			110		mΩ
	Drain-to-source resistance, HS	T_J = 25°C, includes metallization resistance			110		
I/O Protection							
V_{uvp}	Undervoltage protection limit	PVDD falling			7.2		V
$V_{uvp,hyst}$	Undervoltage protection limit	PVDD rising			7.6		V
OTE (3)	Overtemperature error				150		°C
OTE_{HYST} (3)	Extra temperature drop required to recover from error				30		°C
OLPC	Overload protection counter	f_{PWM} = 384 kHz			0.63		ms
I_{OC}	Overcurrent limit protection				4.5		A
I_{OCT}	Overcurrent response time				150		ns
R_{PD}	Internal pulldown resistor at the output of each half-bridge	Connected when drivers are tristated to provide bootstrap capacitor charge.			3		kΩ

(1) I_{IH} for the PBTL pin has a maximum limit of 200 µA due to an internal pulldown on the pin.
(2) This does not include bond-wire or pin resistance.
(3) Specified by design

Copyright © 2010, Texas Instruments Incorporated

AC Characteristics (BTL, PBTL)

PVDD_x = 18 V, BTL AD mode, f_S = 48 KHz, R_L = 8 Ω, R_{OCP} = 22 KΩ, C_{BST} = 33 nF, audio frequency = 1 kHz, AES17 filter, f_{PWM} = 384 kHz, T_A = 25°C (unless otherwise specified). All performance is in accordance with recommended operating conditions (unless otherwise specified).

PARAMETER		TEST CONDITIONS	MIN	TYP	MAX	UNIT
P_O	Power output per channel	PVDD = 18 V, 10% THD, 1-kHz input signal		21.5		W
		PVDD = 18 V, 7% THD, 1-kHz input signal		20.3		
		PVDD = 12 V, 10% THD, 1-kHz input signal		9.6		
		PVDD = 12 V, 7% THD, 1-kHz input signal		9.1		
		PVDD = 8 V, 10% THD, 1-kHz input signal		4.2		
		PVDD = 8 V, 7% THD, 1-kHz input signal		4		
		PBTL mode, PVDD = 12 V, R_L = 4 Ω, 10% THD, 1-kHz input signal		18.7		
		PBTL mode, PVDD = 12 V, R_L = 4 Ω, 7% THD, 1-kHz input signal		17.7		
		PBTL mode, PVDD = 18 V, R_L = 4 Ω, 10% THD, 1-kHz input signal		41.5		
		PBTL mode, PVDD = 18 V, R_L = 4 Ω, 7% THD, 1-kHz input signal		39		
THD+N	Total harmonic distortion + noise	PVDD = 18 V, P_O = 1 W		0.07%		
		PVDD = 12 V, P_O = 1 W		0.03%		
		PVDD = 8 V, P_O = 1 W		0.1%		
V_n	Output integrated noise (rms)	A-weighted		56		μV
	Crosstalk	P_O = 0.25 W, f = 1 kHz (BD Mode)		–82		dB
		P_O = 0.25 W, f = 1 kHz (AD Mode)		–69		dB
SNR	Signal-to-noise ratio (1)	A-weighted, f = 1 kHz, maximum power at THD < 1%		106		dB

(1) SNR is calculated relative to 0-dBFS input level.

Copyright © 2010, Texas Instruments Incorporated

SERIAL AUDIO PORTS SLAVE MODE

over recommended operating conditions (unless otherwise noted)

PARAMETER		TEST CONDITIONS	MIN	TYP	MAX	UNIT
f_{SCLKIN}	Frequency, SCLK 32 × f_S, 48 × f_S, 64 × f_S	C_L = 30 pF	1.024		3.072	MHz
t_{su1}	Setup time, LRCLK to SCLK rising edge		10			ns
t_{h1}	Hold time, LRCLK from SCLK rising edge		10			ns
t_{su2}	Setup time, SDIN to SCLK rising edge		10			ns
t_{h2}	Hold time, SDIN from SCLK rising edge		10			ns
	LRCLK frequency		8	48	48	kHz
	SCLK duty cycle		40%	50%	60%	
	LRCLK duty cycle		40%	50%	60%	
	SCLK rising edges between LRCLK rising edges		32		64	SCLK edges
$t_{(edge)}$	LRCLK clock edge with respect to the falling edge of SCLK		–1/4		1/4	SCLK period
t_r/t_f	Rise/fall time for SCLK/LRCLK				8	ns

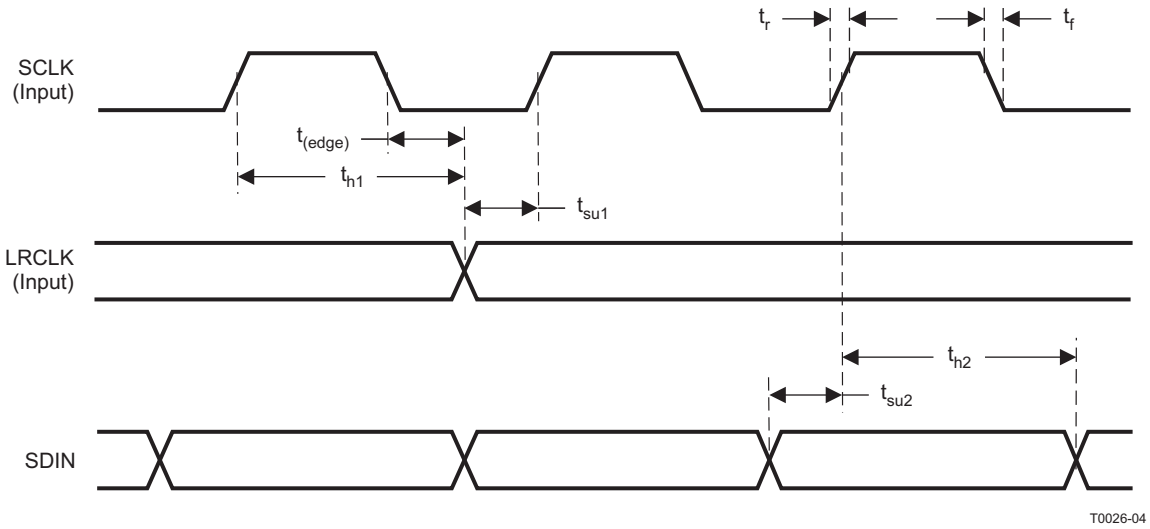

Figure 2. Slave Mode Serial Data Interface Timing

I²C SERIAL CONTROL PORT OPERATION

Timing characteristics for I²C Interface signals over recommended operating conditions (unless otherwise noted)

PARAMETER		TEST CONDITIONS	MIN	MAX	UNIT
f_{SCL}	Frequency, SCL	No wait states		400	kHz
$t_{w(H)}$	Pulse duration, SCL high		0.6		µs
$t_{w(L)}$	Pulse duration, SCL low		1.3		µs
t_r	Rise time, SCL and SDA			300	ns
t_f	Fall time, SCL and SDA			300	ns
t_{su1}	Setup time, SDA to SCL		100		ns
t_{h1}	Hold time, SCL to SDA		0		ns
$t_{(buf)}$	Bus free time between stop and start condition		1.3		µs
t_{su2}	Setup time, SCL to start condition		0.6		µs
t_{h2}	Hold time, start condition to SCL		0.6		µs
t_{su3}	Setup time, SCL to stop condition		0.6		µs
C_L	Load capacitance for each bus line			400	pF

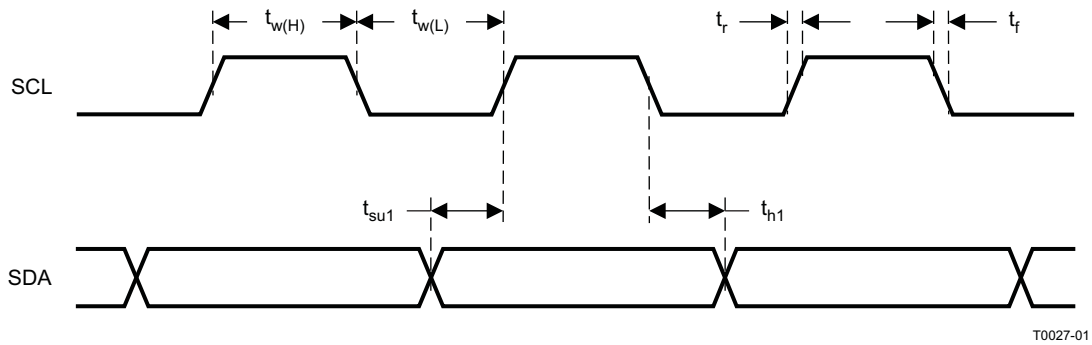

Figure 3. SCL and SDA Timing

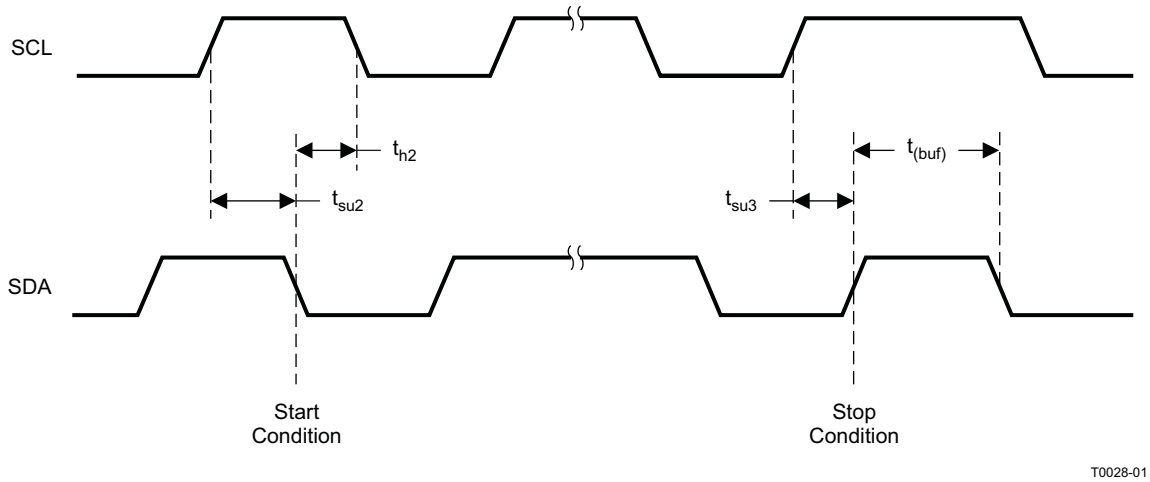

Figure 4. Start and Stop Conditions Timing

Copyright © 2010, Texas Instruments Incorporated

RESET TIMING ($\overline{\text{RESET}}$)

Control signal parameters over recommended operating conditions (unless otherwise noted). Please refer to Recommended Use Model section on usage of all terminals.

PARAMETER		MIN	TYP	MAX	UNIT
$t_{w(RESET)}$	Pulse duration, $\overline{\text{RESET}}$ active	100			µs
$t_{d(I2C_ready)}$	Time to enable I^2C			12.0	ms

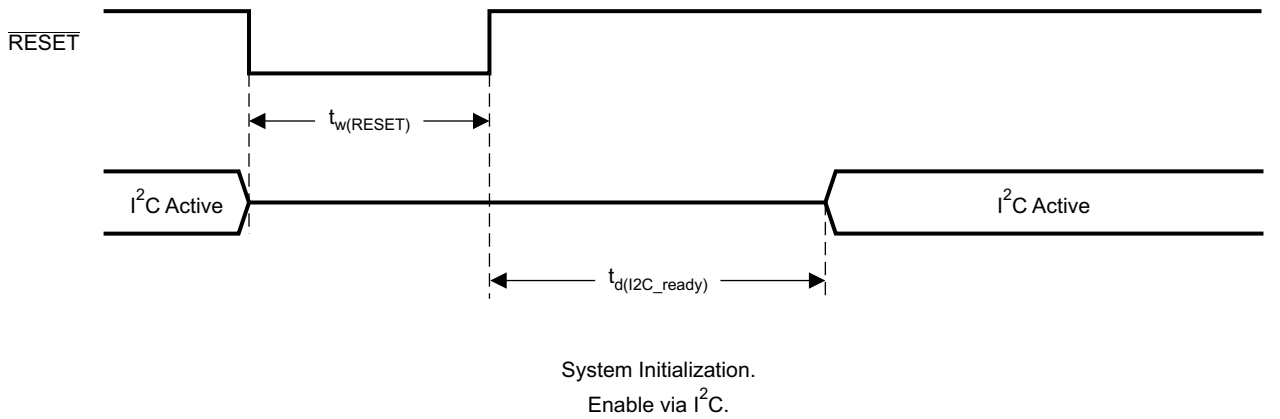

NOTES: On power up, it is recommended that the TAS5715 $\overline{\text{RESET}}$ be held LOW for at least 100 µs after DVDD has reached 3 V.
If $\overline{\text{RESET}}$ is asserted LOW while $\overline{\text{PDN}}$ is LOW, then the $\overline{\text{RESET}}$ must continue to be held LOW for at least 100 µs after $\overline{\text{PDN}}$ is deasserted (HIGH).

Figure 5. Reset Timing

TYPICAL CHARACTERISTICS, BTL CONFIGURATION, 8 Ω

TOTAL HARMONIC DISTORTION + NOISE vs FREQUENCY

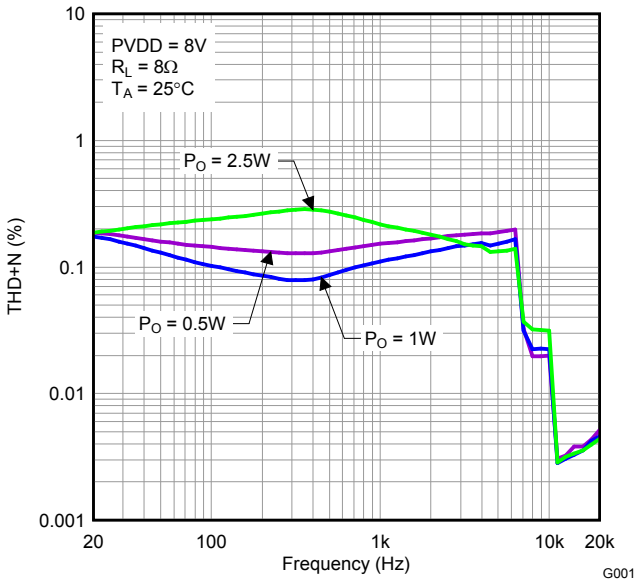

Figure 6.

TOTAL HARMONIC DISTORTION + NOISE vs FREQUENCY

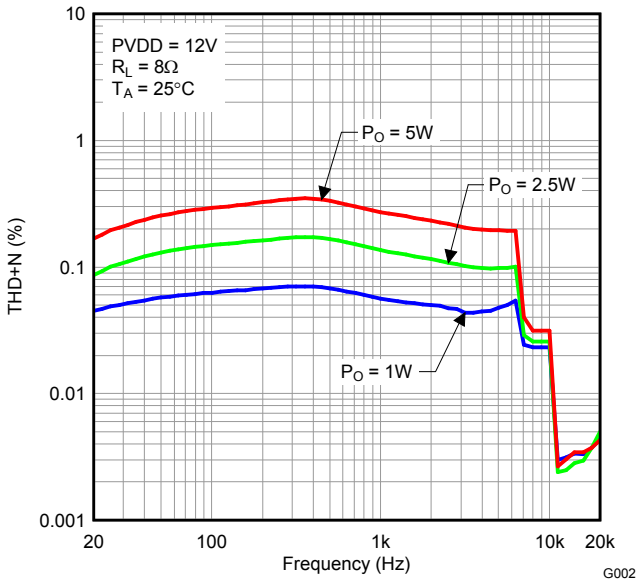

Figure 7.

TOTAL HARMONIC DISTORTION + NOISE vs FREQUENCY

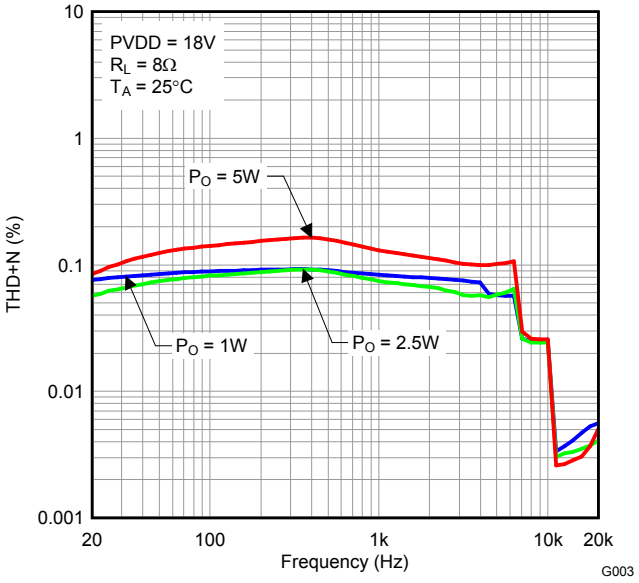

Figure 8.

TOTAL HARMONIC DISTORTION + NOISE vs FREQUENCY

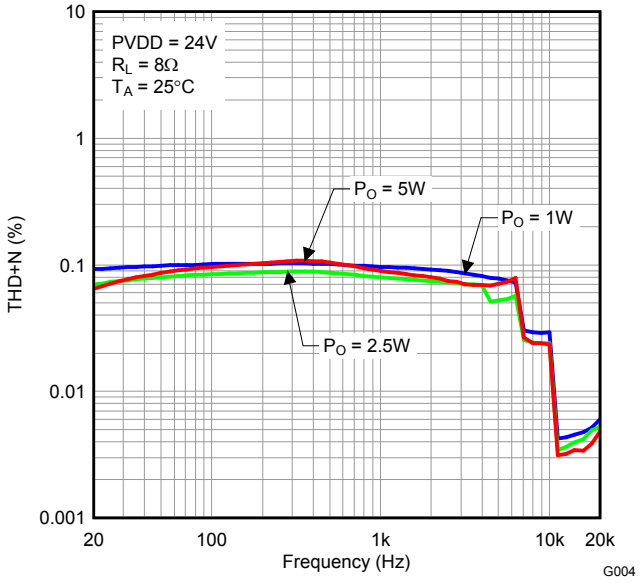

Figure 9.

Copyright © 2010, Texas Instruments Incorporated

TYPICAL CHARACTERISTICS, BTL CONFIGURATION, 8 Ω (continued)

TOTAL HARMONIC DISTORTION + NOISE vs OUTPUT POWER

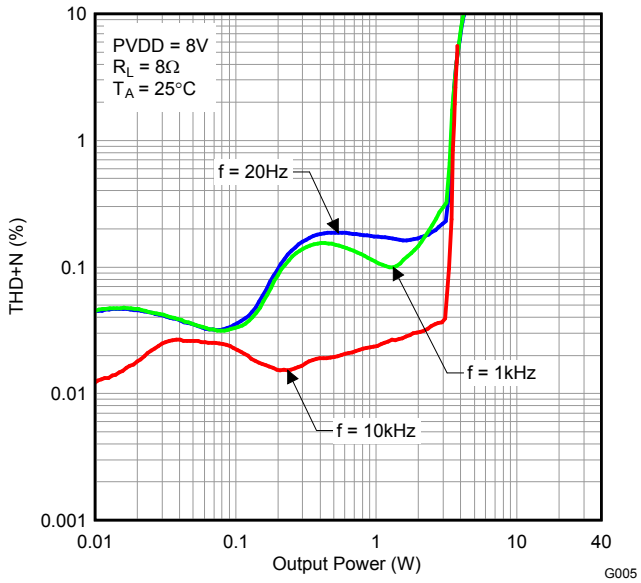

Figure 10.

TOTAL HARMONIC DISTORTION + NOISE vs OUTPUT POWER

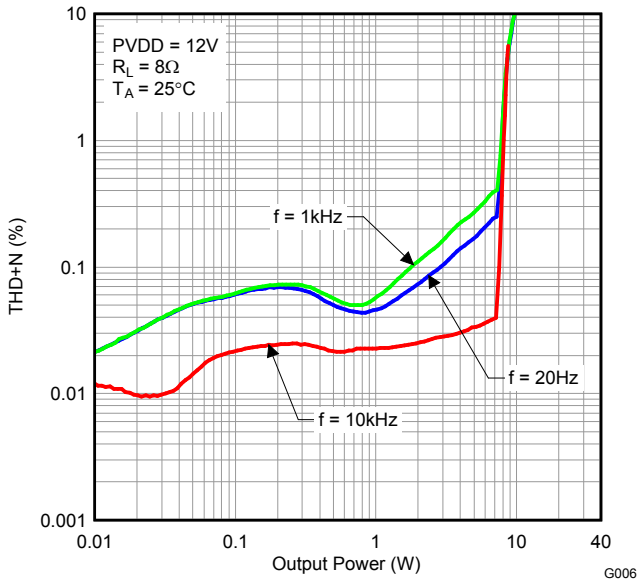

Figure 11.

TOTAL HARMONIC DISTORTION + NOISE vs OUTPUT POWER

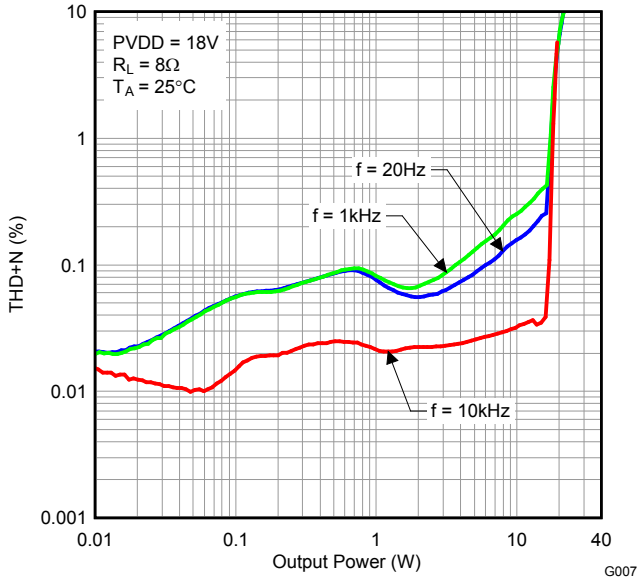

Figure 12.

TOTAL HARMONIC DISTORTION + NOISE vs OUTPUT POWER

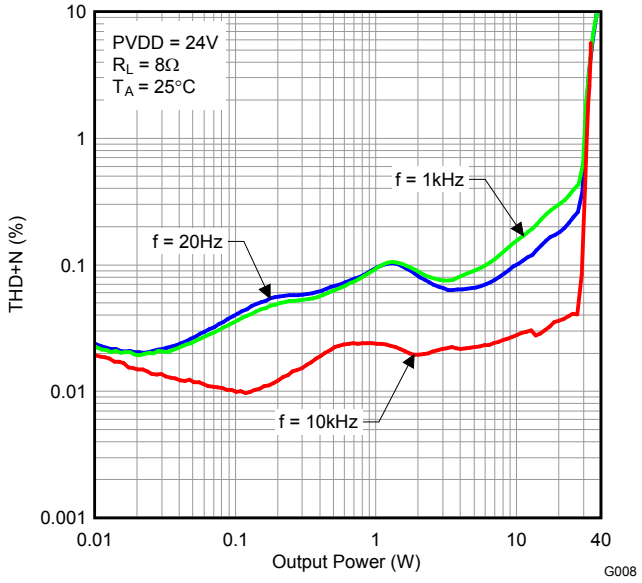

Figure 13.

TYPICAL CHARACTERISTICS, BTL CONFIGURATION, 8 Ω (continued)

OUTPUT POWER vs SUPPLY VOLTAGE

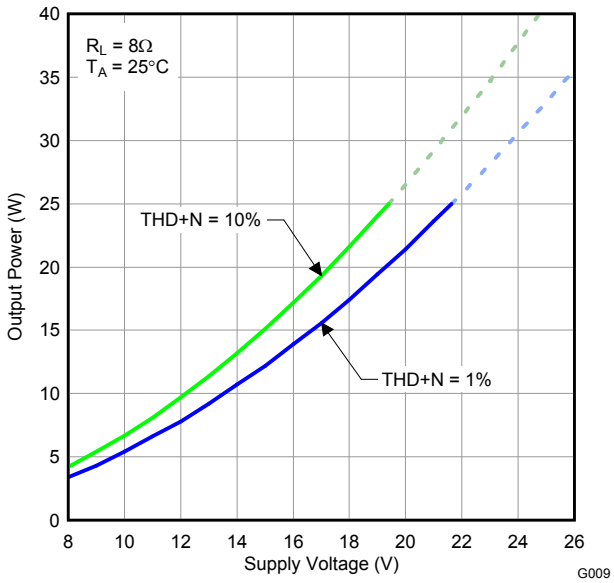

NOTE: Dashed lines represent thermally limited region.

Figure 14.

EFFICIENCY vs TOTAL OUTPUT POWER

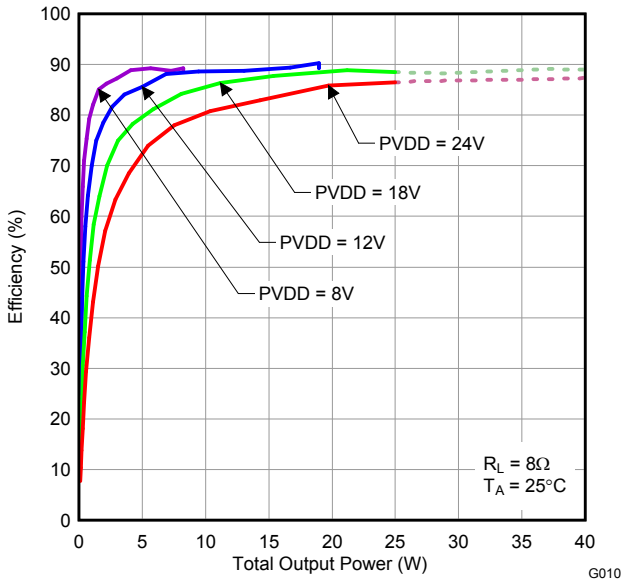

NOTE: Dashed lines represent thermally limited region.

Figure 15.

CROSSTALK vs FREQUENCY

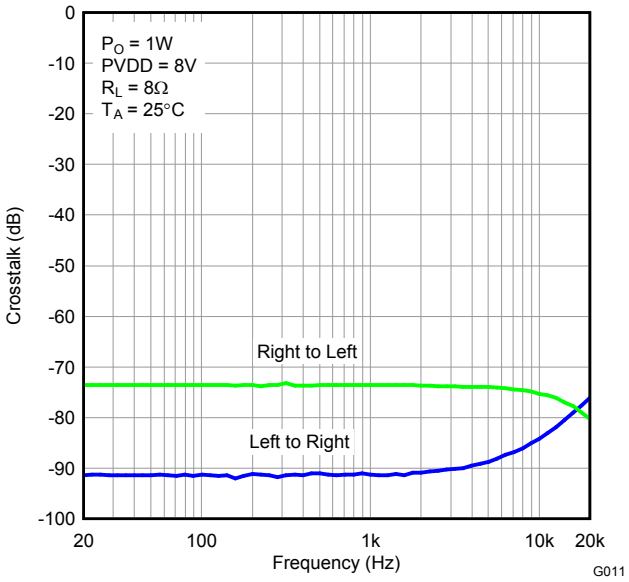

Figure 16.

CROSSTALK vs FREQUENCY

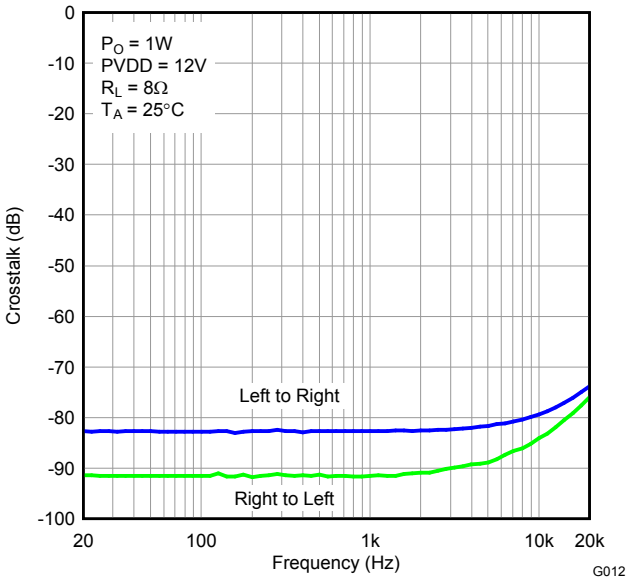

Figure 17.

Copyright © 2010, Texas Instruments Incorporated

TYPICAL CHARACTERISTICS, BTL CONFIGURATION, 8 Ω (continued)

CROSSTALK vs FREQUENCY

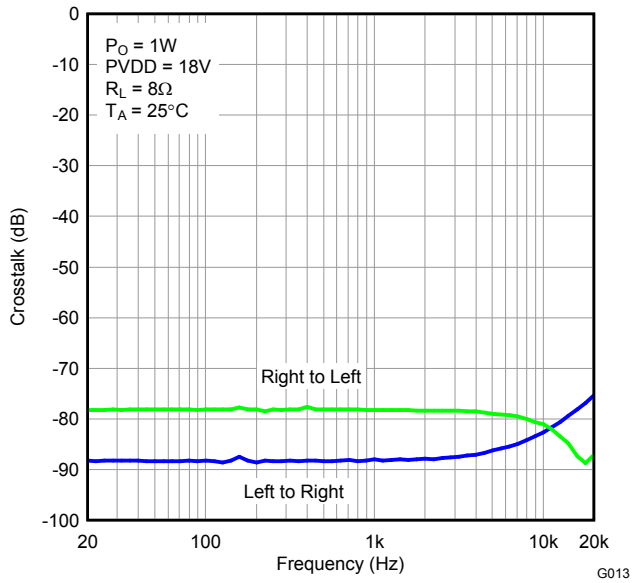

Figure 18.

CROSSTALK vs FREQUENCY

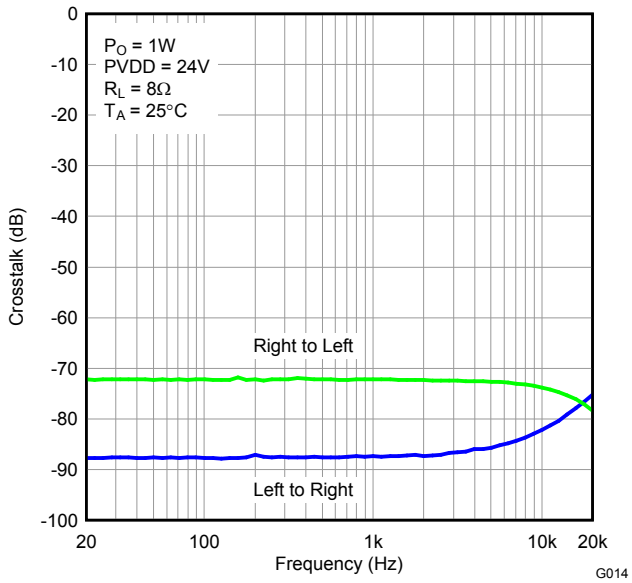

Figure 19.

TYPICAL CHARACTERISTICS, BTL CONFIGURATION, 4 Ω

TOTAL HARMONIC DISTORTION + NOISE vs FREQUENCY

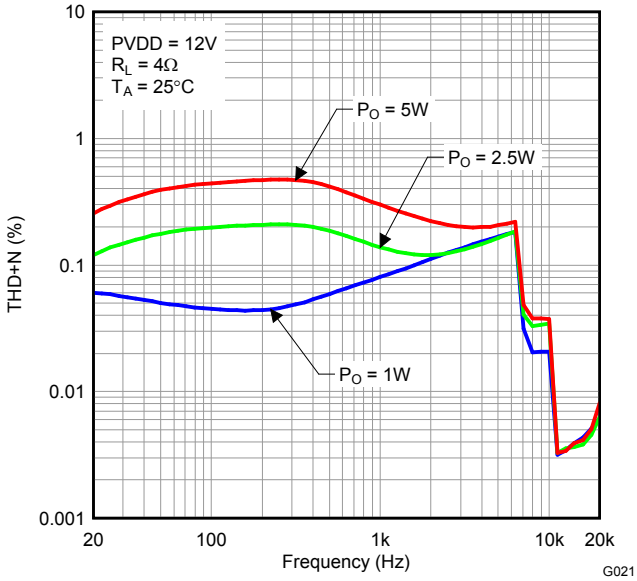

Figure 20.

TOTAL HARMONIC DISTORTION + NOISE vs FREQUENCY

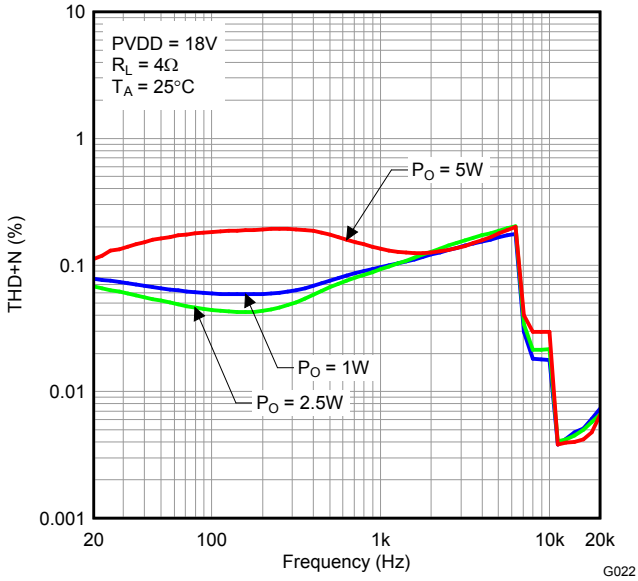

Figure 21.

TOTAL HARMONIC DISTORTION + NOISE vs OUTPUT POWER

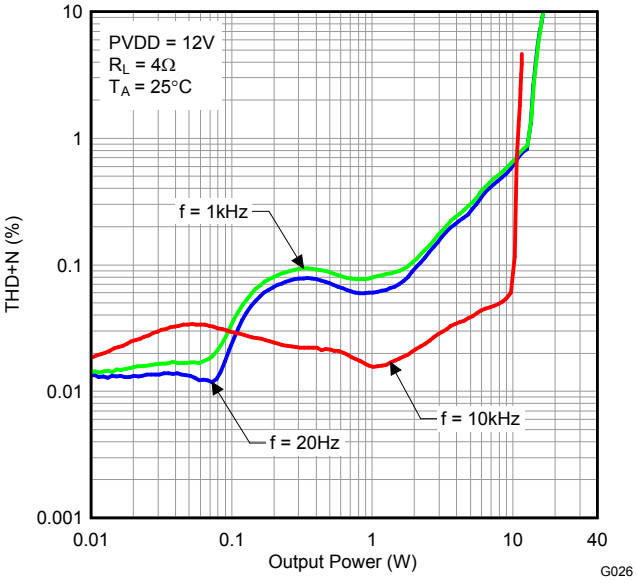

Figure 22.

TOTAL HARMONIC DISTORTION + NOISE vs OUTPUT POWER

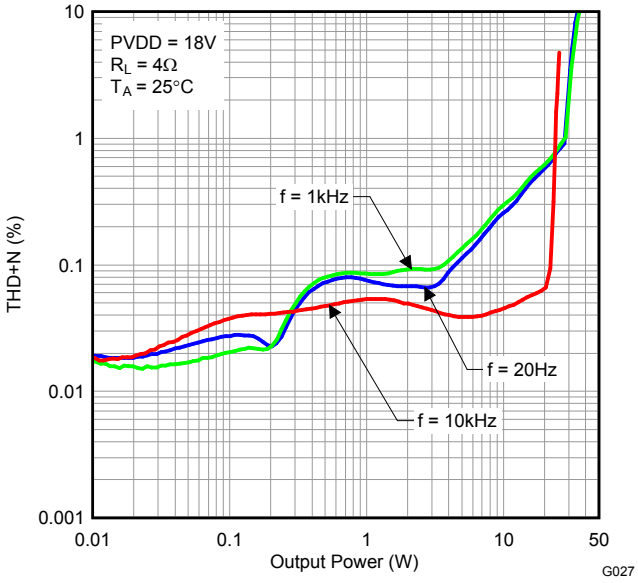

Figure 23.

Copyright © 2010, Texas Instruments Incorporated

TYPICAL CHARACTERISTICS, BTL CONFIGURATION, 4 Ω (continued)

CROSSTALK vs FREQUENCY

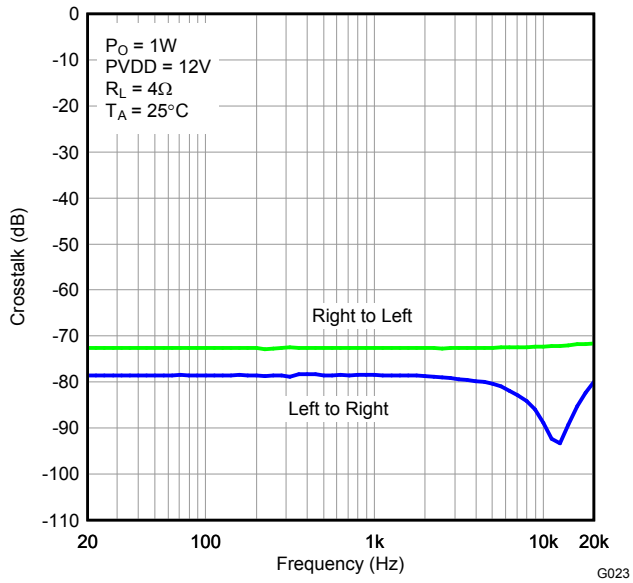

Figure 24.

CROSSTALK vs FREQUENCY

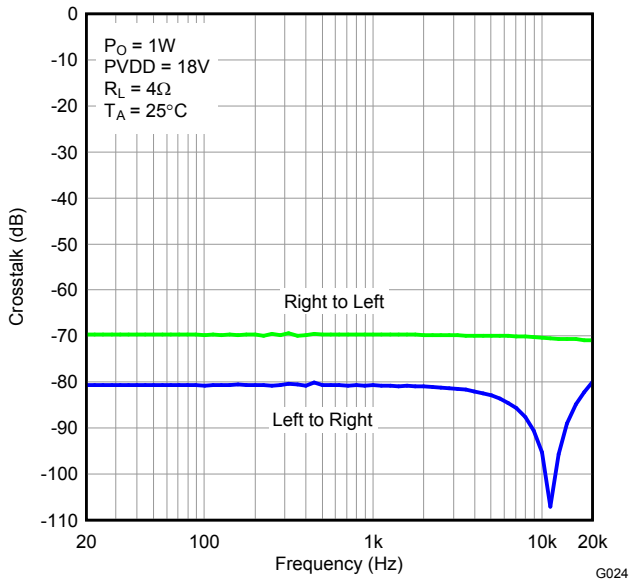

Figure 25.

TYPICAL CHARACTERISTICS, PBTL CONFIGURATION, 4 Ω

TOTAL HARMONIC DISTORTION + NOISE vs FREQUENCY

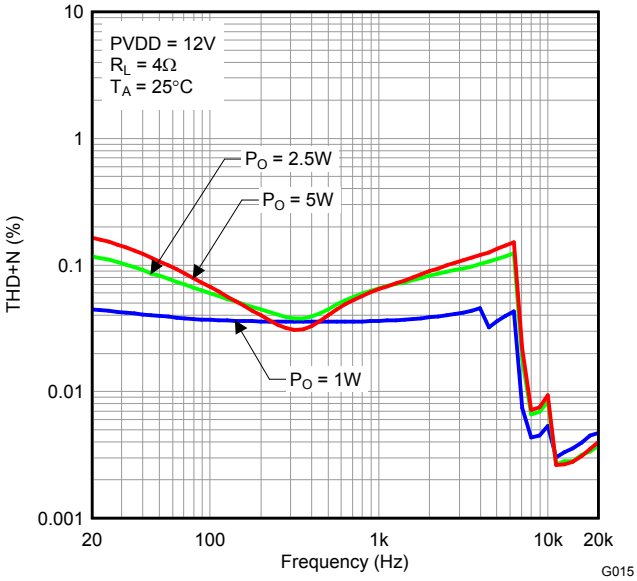

Figure 26.

TOTAL HARMONIC DISTORTION + NOISE vs FREQUENCY

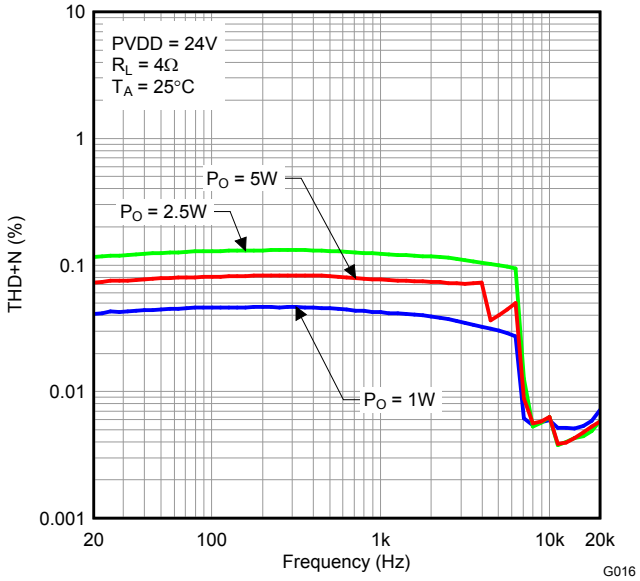

Figure 27.

TOTAL HARMONIC DISTORTION + NOISE vs OUTPUT POWER

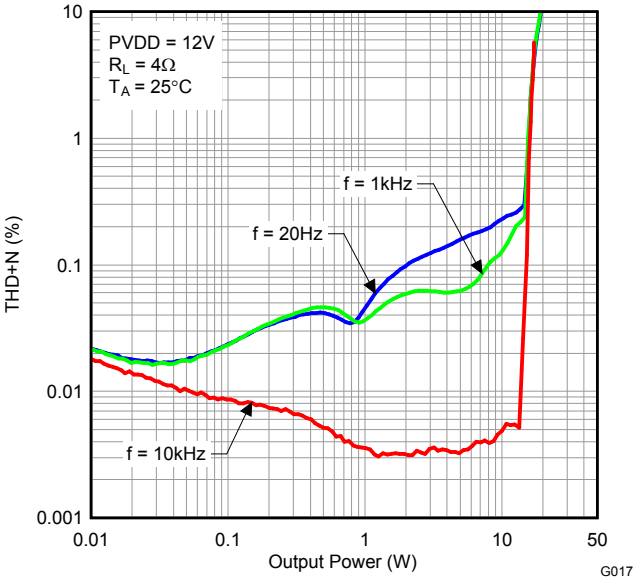

Figure 28.

TOTAL HARMONIC DISTORTION + NOISE vs OUTPUT POWER

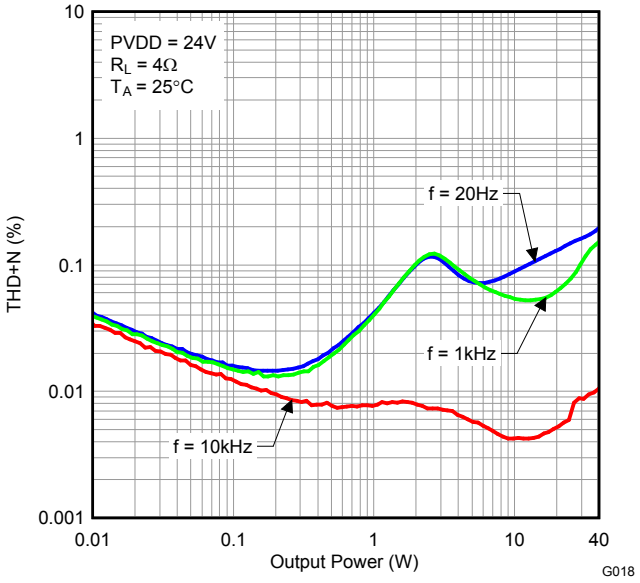

Figure 29.

Copyright © 2010, Texas Instruments Incorporated

TYPICAL CHARACTERISTICS, PBTL CONFIGURATION, 4 Ω (continued)

OUTPUT POWER vs SUPPLY VOLTAGE

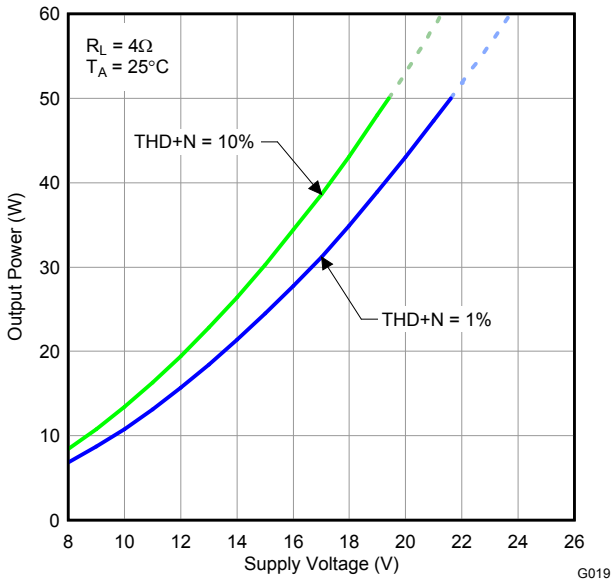

NOTE: Dashed lines represent thermally limited region.

Figure 30.

EFFICIENCY vs TOTAL OUTPUT POWER

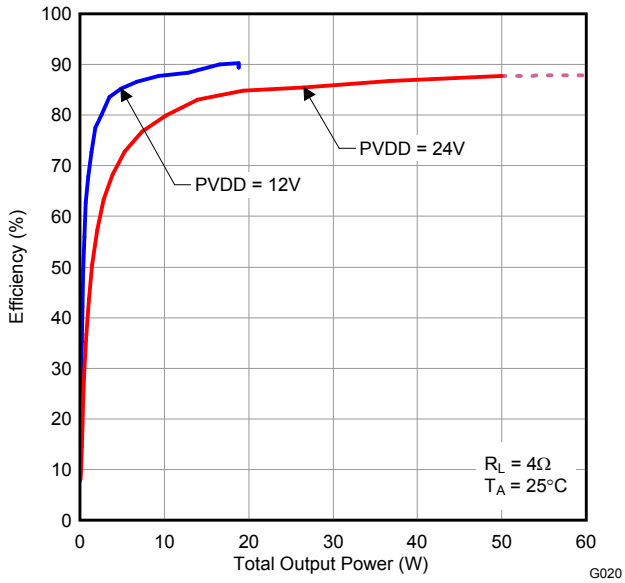

NOTE: Dashed line represents thermally limited region.

Figure 31.

DETAILED DESCRIPTION

POWER SUPPLY

To facilitate system design, the TAS5715 needs only a 3.3-V supply in addition to the (typical) 18-V power-stage supply. An internal voltage regulator provides suitable voltage levels for the gate drive circuitry. Additionally, all circuitry requiring a floating voltage supply, e.g., the high-side gate drive, is accommodated by built-in bootstrap circuitry requiring only a few external capacitors.

In order to provide good electrical and acoustical characteristics, the PWM signal path for the output stage is designed as identical, independent half-bridges. For this reason, each half-bridge has separate bootstrap pins (BST_x) and power-stage supply pins (PVDD_x). The gate drive voltages (GVDD_AB and GVDD_CD) are derived from the PVDD voltage. Special attention should be paid to placing all decoupling capacitors as close to their associated pins as possible. In general, inductance between the power-supply pins and decoupling capacitors must be avoided.

For a properly functioning bootstrap circuit, a small ceramic capacitor must be connected from each bootstrap pin (BST_x) to the power-stage output pin (OUT_x). When the power-stage output is low, the bootstrap capacitor is charged through an internal diode connected between the gate-drive regulator output pin (GVDD_x) and the bootstrap pin. When the power-stage output is high, the bootstrap capacitor potential is shifted above the output potential and thus provides a suitable voltage supply for the high-side gate driver. In an application with PWM switching frequencies in the range from 352 kHz to 384 kHz, it is recommended to use 33-nF ceramic capacitors, size 0603 or 0805, for the bootstrap supply. These 33-nF capacitors ensure sufficient energy storage, even during minimal PWM duty cycles, to keep the high-side power stage FET (LDMOS) fully turned on during the remaining part of the PWM cycle.

Special attention should be paid to the power-stage power supply; this includes component selection, PCB placement, and routing. As indicated, each half-bridge has independent power-stage supply pins (PVDD_x). For optimal electrical performance, EMI compliance, and system reliability, it is important that each PVDD_x pin is decoupled with a 100-nF ceramic capacitor placed as close as possible to each supply pin.

The TAS5715 is fully protected against erroneous power-stage turnon due to parasitic gate charging.

I^2C CHIP SELECT/HP_SHUTDOWN

A_SEL/HP_SD is an input pin during power up. It can be pulled high or low. HIGH indicates an I^2C subaddress of 0x56, and LOW a subaddress of 0x54.

When used in headphone mode, this pin can be re-assigned as an output after reset during the initialization sequence. Then this pin functions as headphone shutdown (active-high shutdown). A device with a headphone should use an external pulldown, so the address is 0x54.

SINGLE-FILTER PBTL MODE

The TAS5715 supports parallel BTL (PBTL) mode with OUT_A/OUT_B (and OUT_C/OUT_D) connected before the LC filter. In order to put the part in PBTL configuration, drive PBTL (pin 8) HIGH. This synchronizes the turnoff of half-bridges A and B (and similarly C/D) if an overcurrent condition is detected in either half-bridge. There is a pulldown resistor on the PBTL pin that configures the part in BTL mode if the pin is left floating.

PWM output multiplexers should be updated to set the device in PBTL mode. Output Mux Register (0x25) should be written with a value of 0x01 10 32 45. Also, the PWM shutdown register (0x19) should be written with a value of 0x3A.

DEVICE PROTECTION SYSTEM

Overcurrent (OC) Protection With Current Limiting

The device has independent, fast-reacting current detectors on all high-side and low-side power-stage FETs. The detector outputs are closely monitored by two protection systems. The first protection system controls the power stage in order to prevent the output current further increasing, i.e., it performs a cycle-by-cycle current-limiting function, rather than prematurely shutting down during combinations of high-level music transients and extreme speaker load impedance drops. If the high-current condition situation persists, i.e., the power stage is being

 Copyright © 2010, Texas Instruments Incorporated

overloaded, a second protection system triggers a latching shutdown, resulting in the power stage being set in the high-impedance (Hi-Z) state. The device returns to normal operation once the fault condition (i.e., a short circuit on the output) is removed. Current limiting and overcurrent protection are not independent for half-bridges. That is, if the bridge-tied load between half-bridges A and B causes an overcurrent fault, half-bridges A, B, C, and D are shut down.

Overtemperature Protection

The TAS5715 has an overtemperature-protection system. If the device junction temperature exceeds 150°C (nominal), the device is put into thermal shutdown, resulting in all half-bridge outputs being set in the high-impedance (Hi-Z) state and $\overline{\text{FAULT}}$ being asserted low. The TAS5715 recovers automatically once the temperature drops approximately 30°.

Undervoltage Protection (UVP) and Power-On Reset (POR)

The UVP and POR circuits of the TAS5715 fully protect the device in any power-up/down and brownout situation. While powering up, the POR circuit resets the overload circuit (OLP) and ensures that all circuits are fully operational when the PVDD and AVDD supply voltages reach 7.6 V and 2.7 V, respectively. Although PVDD and AVDD are independently monitored, a supply voltage drop below the UVP threshold on AVDD or on either PVDD pin results in all half-bridge outputs immediately being set in the high-impedance (Hi-Z) state and $\overline{\text{FAULT}}$ being asserted low.

SSTIMER FUNCTIONALITY

SSTIMER is used to reduced turnon pop. This is used only in AD mode. The SSTIMER pin uses a capacitor connected between this pin and ground to control the output duty cycle when exiting all-channel shutdown. The capacitor on the SSTIMER pin is slowly charged through an internal current source, and the charge time determines the rate at which the output transitions from a near-zero duty cycle to the desired duty cycle. This allows for a smooth transition that minimizes audible pops and clicks. When the part is shut down, the drivers are high-impedance and transition slowly down through a 3-kΩ resistor, similarly minimizing pops and clicks. The shutdown transition time is independent of the SSTIMER pin capacitance. Larger capacitors increase the start-up time, whereas capacitors smaller than 2.2 nF decrease the start-up time. **The SSTIMER pin should be left floating for BD modulation.**

CLOCK, AUTO DETECTION, AND PLL

The TAS5715 is a slave device. It accepts MCLK, SCLK, and LRCLK. The digital audio processor (DAP) supports all the sample rates and MCLK rates that are defined in the clock control register .

The TAS5715 checks to verify that SCLK is a specific value of 32 f_S, 48 f_S, or 64 f_S. The DAP only supports a 1 × f_S LRCLK. The timing relationship of these clocks to SDIN is shown in subsequent sections. The clock section uses MCLK or the internal oscillator clock (when MCLK is unstable, out of range, or absent) to produce the internal clock (DCLK) running at 512 times the PWM switching frequency.

The DAP can autodetect and set the internal clock-control logic to the appropriate settings for all supported clock rates as defined in the clock control register.

TAS5715 has robust clock error handling that uses the bulit-in trimmed oscillator clock to quickly detect changes/errors. Once the system detects a clock change/error, it mutes the audio (through a single-step mute) and then forces PLL to limp using the internal oscillator as a reference clock. Once the clocks are stable, the system autodetects the new rate and reverts to normal operation. During this process, the default volume is restored in a single step (also called hard unmute). The ramp process can be programmed to ramp back slowly (also called soft unmute) as defined in volume register (0x0E).

SERIAL DATA INTERFACE

Serial data is input on SDIN. The PWM outputs are derived from SDIN. The TAS5715 DAP accepts serial data in 16-, 20-, or 24-bit left-justified, right-justified, or I^2S serial data format.

Copyright © 2010, Texas Instruments Incorporated

PWM Section

The TAS5715 DAP device uses noise-shaping and sophisticated nonlinear correction algorithms to achieve high power efficiency and high-performance digital audio reproduction. The DAP uses a fourth-order noise shaper to increase dynamic range and SNR in the audio band. The PWM section accepts 24-bit PCM data from the DAP and outputs two BTL PWM audio output channels.

The PWM section has individual-channel dc-blocking filters that can be enabled and disabled. The filter cutoff frequency is less than 1 Hz. Individual-channel de-emphasis filters for 44.1- and 48-kHz are included and can be enabled and disabled.

Finally, the PWM section has an adjustable maximum modulation limit of 93.8% to 99.2%.

For detailed description of using audio processing features like DRC, EQ, 3D, and bass boost, see the User's Guide and TAS570X GDE software development tool documentation. Also see the GDE software development tool for the device data path.

I^2C COMPATIBLE SERIAL CONTROL INTERFACE

The TAS5715 DAP has an I^2C serial control slave interface to receive commands from a system controller. The serial control interface supports both normal-speed (100-kHz) and high-speed (400-kHz) operations without wait states. As an added feature, this interface operates even if MCLK is absent.

The serial control interface supports both single-byte and multiple-byte read and write operations for status registers and the general control registers associated with the PWM.

SERIAL INTERFACE CONTROL AND TIMING

I^2S Timing

I^2S timing uses LRCLK to define when the data being transmitted is for the left channel and when it is for the right channel. LRCLK is low for the left channel and high for the right channel. A bit clock running at 32, 48, or 64 × f_S is used to clock in the data. There is a delay of one bit clock from the time the LRCLK signal changes state to the first bit of data on the data lines. The data is written MSB-first and is valid on the rising edge of bit clock. The DAP masks unused trailing data-bit positions.

Copyright © 2010, Texas Instruments Incorporated

2-Channel I^{2}S (Philips Format) Stereo Input

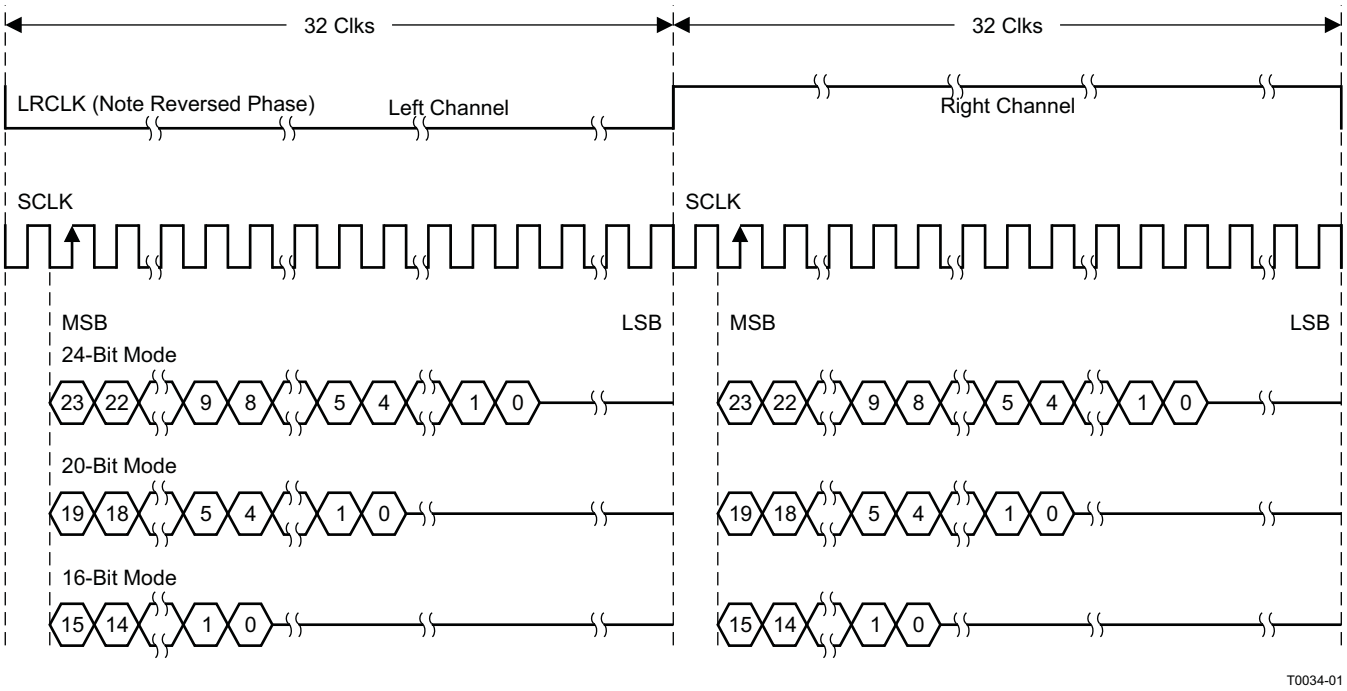

NOTE: All data presented in 2s-complement form with MSB first.

Figure 32. I^{2}S 64-f_S Format

2-Channel I^{2}S (Philips Format) Stereo Input/Output (24-Bit Transfer Word Size)

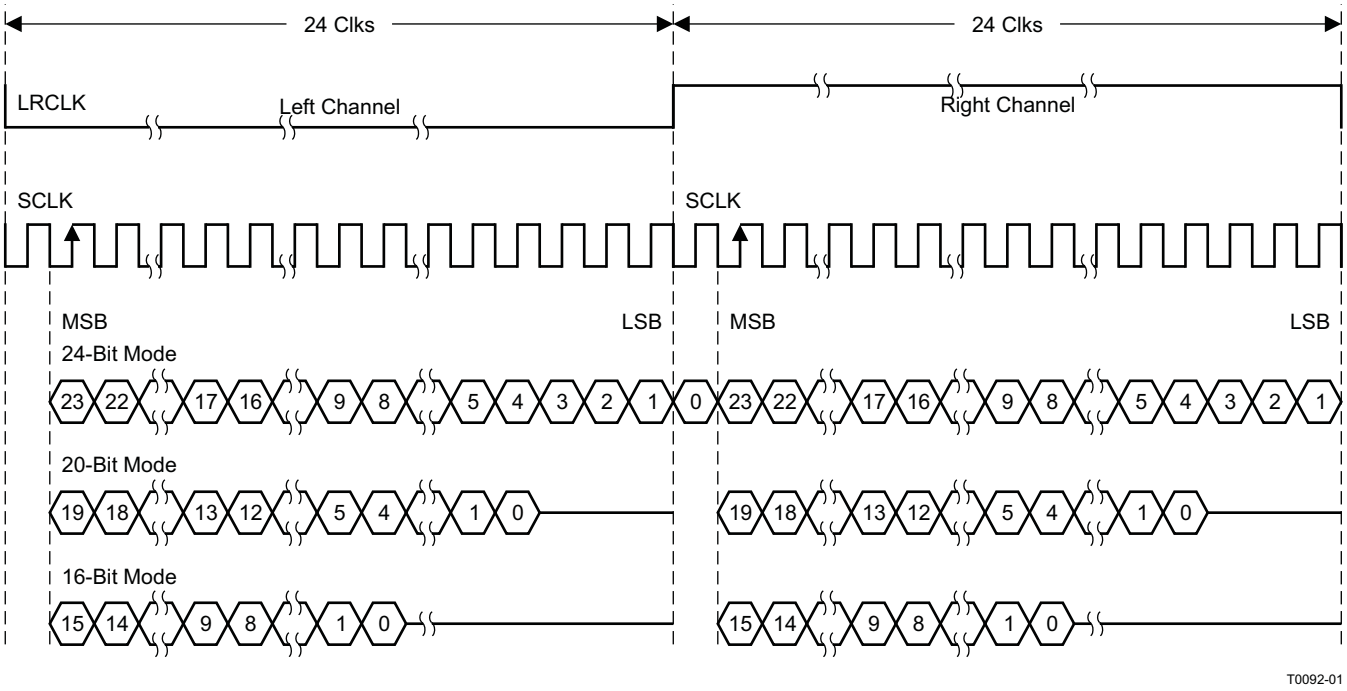

NOTE: All data presented in 2s-complement form with MSB first.

Figure 33. I^{2}S 48-f_S Format

2-Channel I²S (Philips Format) Stereo Input

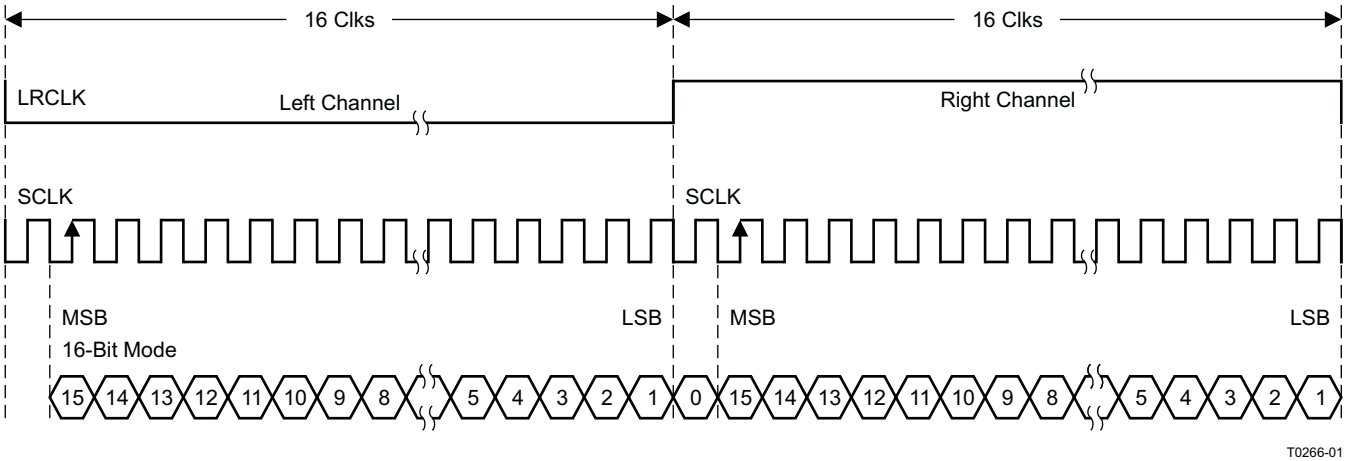

NOTE: All data presented in 2s-complement form with MSB first.

Figure 34. I²S 32-f_S Format

Left-Justified

Left-justified (LJ) timing uses LRCLK to define when the data being transmitted is for the left channel and when it is for the right channel. LRCLK is high for the left channel and low for the right channel. A bit clock running at 32, 48, or 64 × f_S is used to clock in the data. The first bit of data appears on the data lines at the same time LRCLK toggles. The data is written MSB-first and is valid on the rising edge of the bit clock. The DAP masks unused trailing data-bit positions.

2-Channel Left-Justified Stereo Input

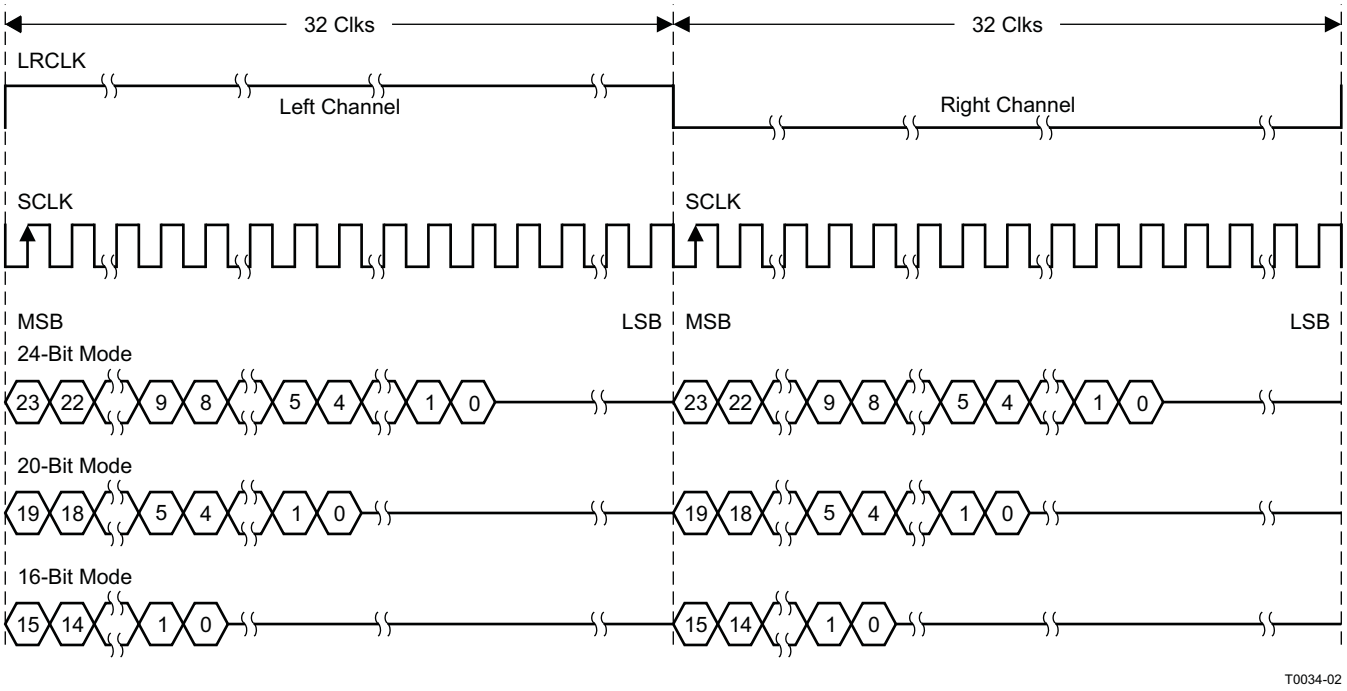

NOTE: All data presented in 2s-complement form with MSB first.

Figure 35. Left-Justified 64-f_S Format

Copyright © 2010, Texas Instruments Incorporated

2-Channel Left-Justified Stereo Input (24-Bit Transfer Word Size)

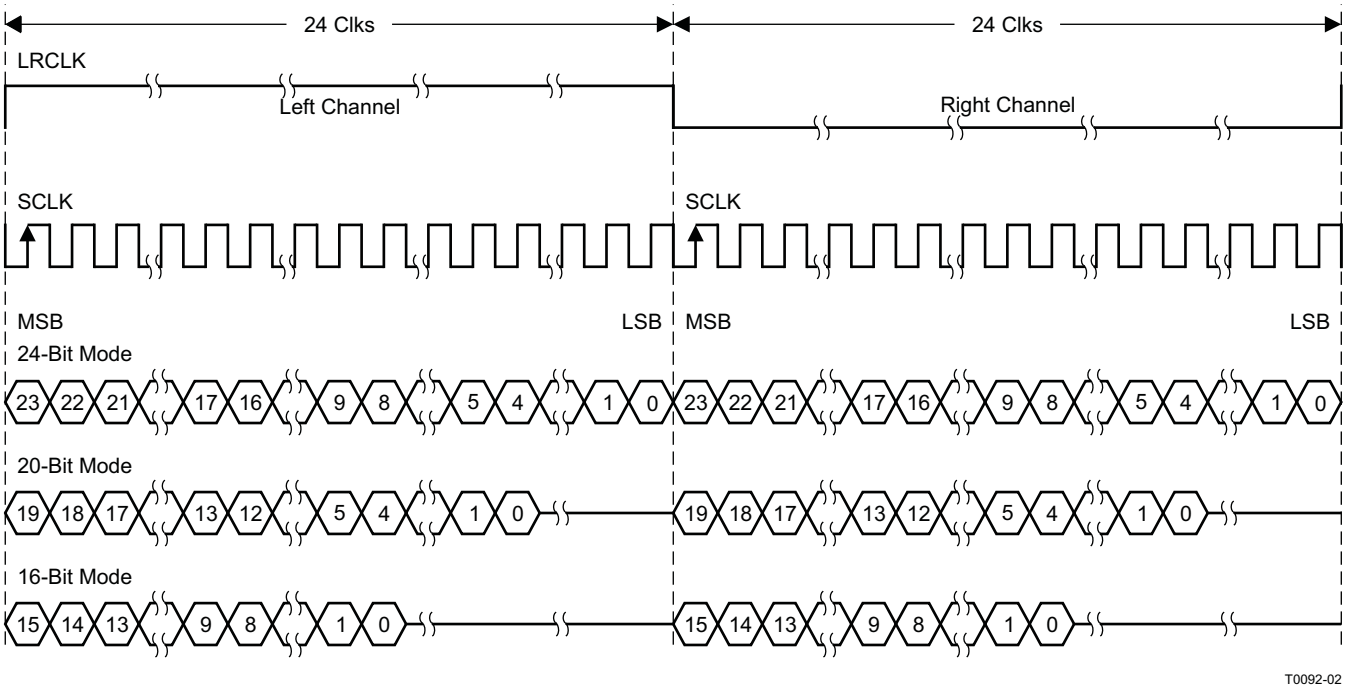

NOTE: All data presented in 2s-complement form with MSB first.

Figure 36. Left-Justified 48-f_S Format

2-Channel Left-Justified Stereo Input

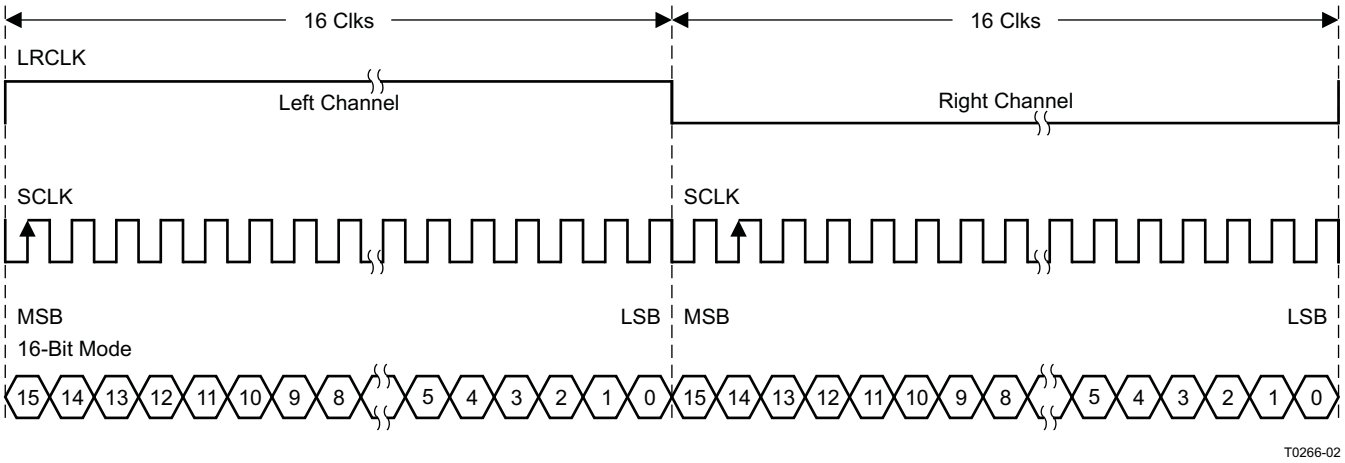

NOTE: All data presented in 2s-complement form with MSB first.

Figure 37. Left-Justified 32-f_S Format

Right-Justified

Right-justified (RJ) timing uses LRCLK to define when the data being transmitted is for the left channel and when

it is for the right channel. LRCLK is high for the left channel and low for the right channel. A bit clock running at 32, 48, or 64 × f_S is used to clock in the data. The first bit of data appears on the data 8 bit-clock periods (for 24-bit data) after LRCLK toggles. In RJ mode the LSB of data is always clocked by the last bit clock before LRCLK transitions. The data is written MSB-first and is valid on the rising edge of bit clock. The DAP masks unused leading data-bit positions.

2-Channel Right-Justified (Sony Format) Stereo Input

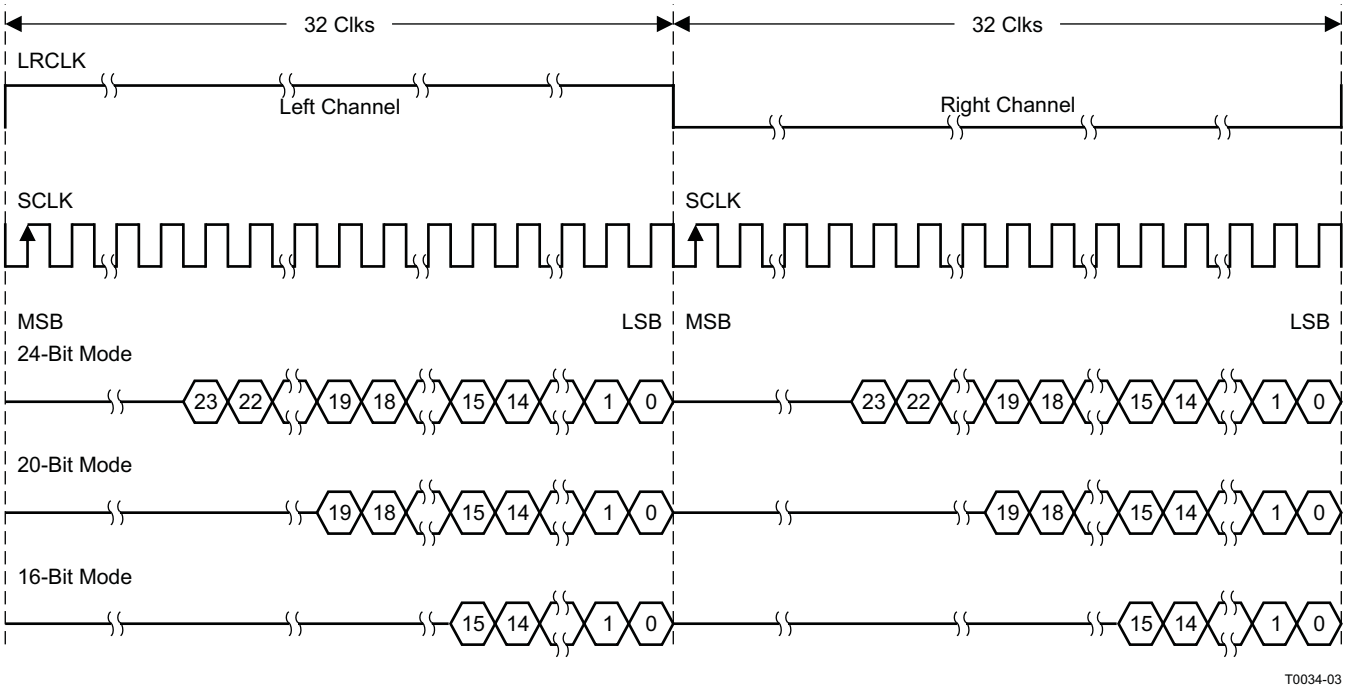

Figure 38. Right-Justified 64-f_S Format

Copyright © 2010, Texas Instruments Incorporated

2-Channel Right-Justified Stereo Input (24-Bit Transfer Word Size)

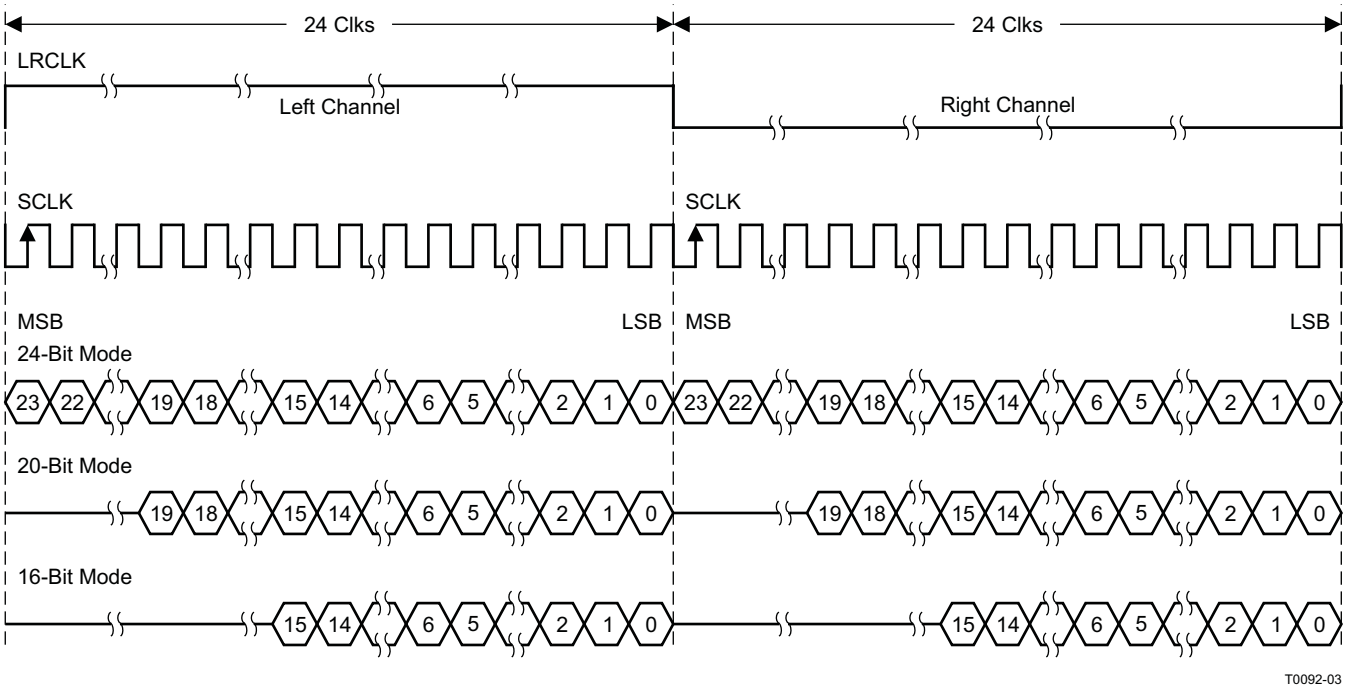

Figure 39. Right-Justified 48-f_S Format

2-Channel Right-Justified (Sony Format) Stereo Input

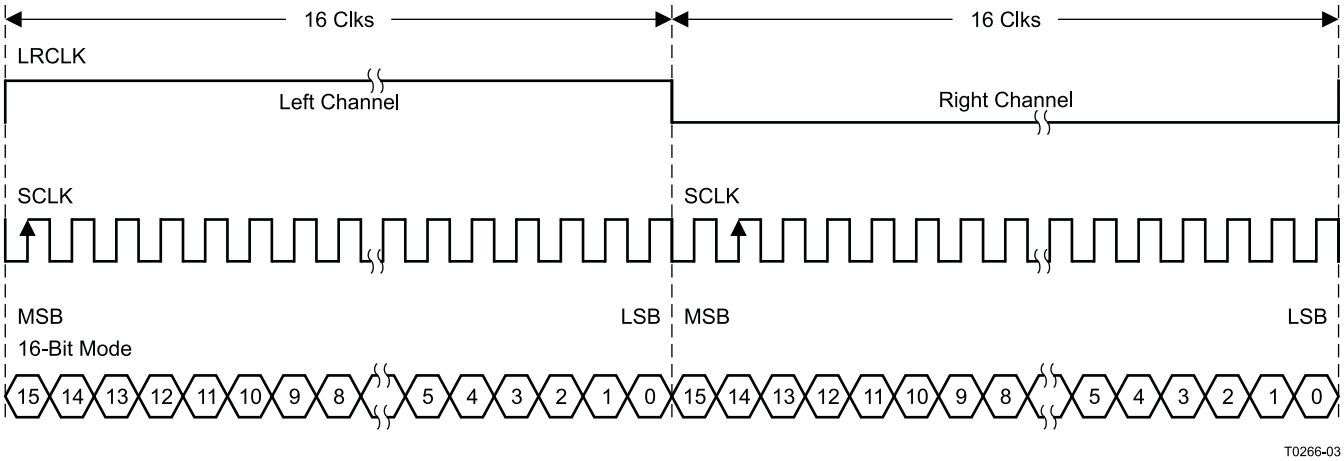

Figure 40. Right-Justified 32-f_S Format

I²C SERIAL CONTROL INTERFACE

The TAS5715 DAP has a bidirectional I²C interface that is compatible with the Inter IC (I²C) bus protocol and supports both 100-kHz and 400-kHz data transfer rates for single- and multiple-yte write and read operations. This is a slave-only device that does not support a multimaster bus environment or wait-state insertion. The control interface is used to program the registers of the device and to read device status.

The DAP supports the standard-mode I²C bus operation (100 kHz maximum) and the fast I²C bus operation (400 kHz maximum). The DAP performs all I²C operations without I²C wait cycles.

General I²C Operation

The I²C bus employs two signals; SDA (data) and SCL (clock), to communicate between integrated circuits in a system. Data is transferred on the bus serially, one bit at a time. The address and data can be transferred in byte (8-bit) format, with the most significant bit (MSB) transferred first. In addition, each byte transferred on the bus is acknowledged by the receiving device with an acknowledge bit. Each transfer operation begins with the master device driving a start condition on the bus and ends with the master device driving a stop condition on the bus. The bus uses transitions on the data pin (SDA) while the clock is high to indicate start and stop conditions. A high-to-low transition on SDA indicates a start and a low-to-high transition indicates a stop. Normal data-bit transitions must occur within the low time of the clock period. These conditions are shown in Figure 41. The master generates the 7-bit slave address and the read/write (R/$\overline{W}$) bit to open communication with another device and then waits for an acknowledge condition. The TAS5715 holds SDA low during the acknowledge clock period to indicate an acknowledgment. When this occurs, the master transmits the next byte of the sequence. Each device is addressed by a unique 7-bit slave address plus R/$\overline{W}$ bit (1 byte). All compatible devices share the same signals via a bidirectional bus using a wired-AND connection. An external pullup resistor must be used for the SDA and SCL signals to set the high level for the bus.

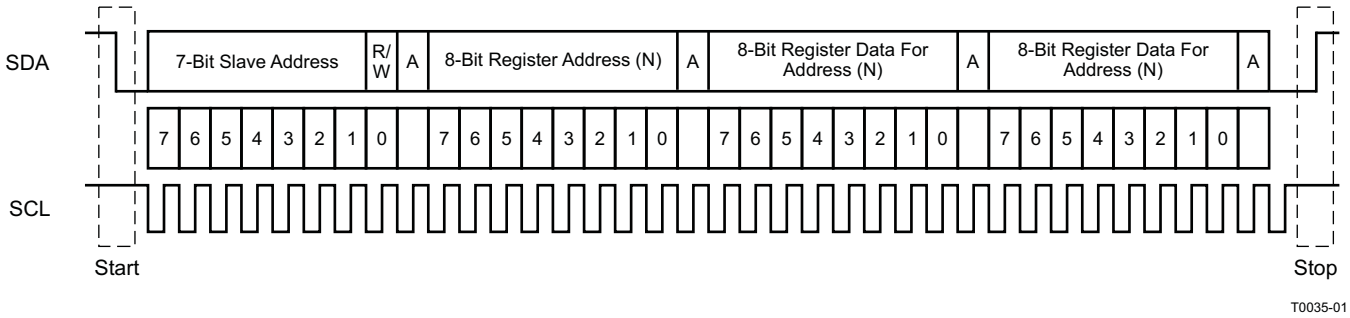

Figure 41. Typical I²C Sequence

There is no limit on the number of bytes that can be transmitted between start and stop conditions. When the last word transfers, the master generates a stop condition to release the bus. A generic data transfer sequence is shown in Figure 41.

The 7-bit address for TAS5715 is 0101 010 (0x54) or 0101 011 (0x56) defined by A_SEL (external pulldown for 0x54 and pullup for 0x56).Stero device with Headphone should use 0x54 as its device address.

Single- and Multiple-Byte Transfers

The serial control interface supports both single-byte and multiple-byte read/write operations for subaddresses 0x00 to 0x1F. However, for the subaddresses 0x20 to 0xFF, the serial control interface supports only multiple-byte read/write operations (in multiples of 4 bytes).

During multiple-byte read operations, the DAP responds with data, a byte at a time, starting at the subaddress assigned, as long as the master device continues to respond with acknowledges. If a particular subaddress does not contain 32 bits, the unused bits are read as logic 0.

During multiple-byte write operations, the DAP compares the number of bytes transmitted to the number of bytes that are required for each specific subaddress. For example, if a write command is received for a biquad subaddress, the DAP expects to receive five 32-bit words. If fewer than five 32-bit data words have been received when a stop command (or another start command) is received, the data received is discarded.

Copyright © 2010, Texas Instruments Incorporated

Supplying a subaddress for each subaddress transaction is referred to as random I^{2}C addressing. The TAS5715 also supports sequential I^{2}C addressing. For write transactions, if a subaddress is issued followed by data for that subaddress and the 15 subaddresses that follow, a sequential I^{2}C write transaction has taken place, and the data for all 16 subaddresses is successfully received by the TAS5715. For I^{2}C sequential write transactions, the subaddress then serves as the start address, and the amount of data subsequently transmitted, before a stop or start is transmitted, determines how many subaddresses are written. As was true for random addressing, sequential addressing requires that a complete set of data be transmitted. If only a partial set of data is written to the last subaddress, the data for the last subaddress is discarded. However, all other data written is accepted; only the incomplete data is discarded.

Single-Byte Write

As shown in Figure 42, a single-byte data-write transfer begins with the master device transmitting a start condition followed by the I^{2}C device address and the read/write bit. The read/write bit determines the direction of the data transfer. For a data-write transfer, the read/write bit is 0. After receiving the correct I^{2}C device address and the read/write bit, the DAP responds with an acknowledge bit. Next, the master transmits the address byte or bytes corresponding to the TAS5715 internal memory address being accessed. After receiving the address byte, the TAS5715 again responds with an acknowledge bit. Next, the master device transmits the data byte to be written to the memory address being accessed. After receiving the data byte, the TAS5715 again responds with an acknowledge bit. Finally, the master device transmits a stop condition to complete the single-byte data-write transfer.

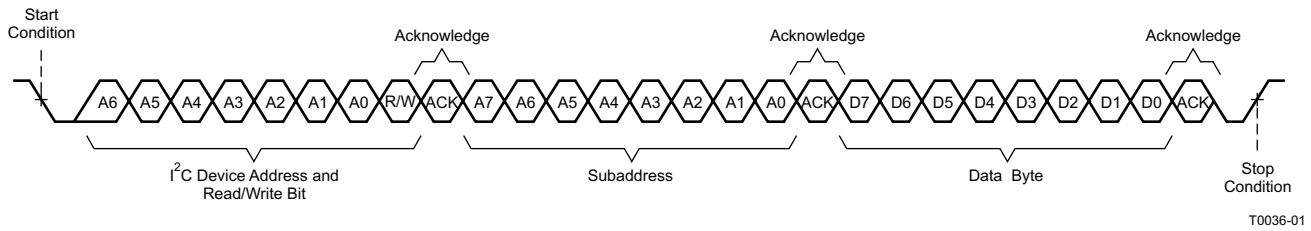

Figure 42. Single-Byte Write Transfer

Multiple-Byte Write

A multiple-byte data-write transfer is identical to a single-byte data write transfer except that multiple data bytes are transmitted by the master device to the DAP as shown in Figure 43. After receiving each data byte, the TAS5715 responds with an acknowledge bit.

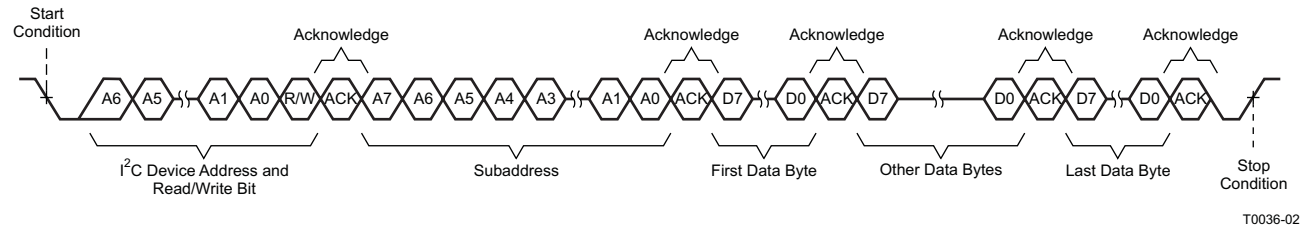

Figure 43. Multiple-Byte Write Transfer

Single-Byte Read

As shown in Figure 44, a single-byte data-read transfer begins with the master device transmitting a start condition followed by the I²C device address and the read/write bit. For the data-read transfer, both a write followed by a read are actually done. Initially, a write is done to transfer the address byte or bytes of the internal memory address to be read. As a result, the read/write bit becomes a 0. After receiving the TAS5715 address and the read/write bit, TAS5715 responds with an acknowledge bit. In addition, after sending the internal memory address byte or bytes, the master device transmits another start condition followed by the TAS5715 address and the read/write bit again. This time the read/write bit becomes a 1, indicating a read transfer. After receiving the address and the read/write bit, the TAS5715 again responds with an acknowledge bit. Next, the TAS5715 transmits the data byte from the memory address being read. After receiving the data byte, the master device transmits a not-acknowledge followed by a stop condition to complete the single-byte data-read transfer.

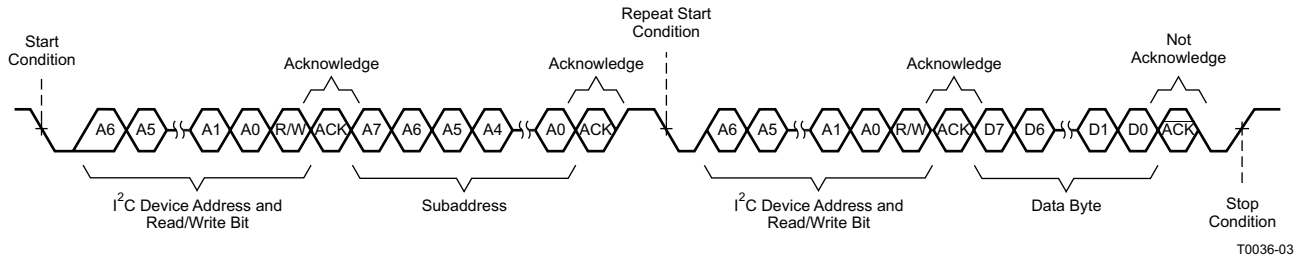

Figure 44. Single-Byte Read Transfer

Multiple-Byte Read

A multiple-byte data-read transfer is identical to a single-byte data-read transfer except that multiple data bytes are transmitted by the TAS5715 to the master device as shown in Figure 45. Except for the last data byte, the master device responds with an acknowledge bit after receiving each data byte.

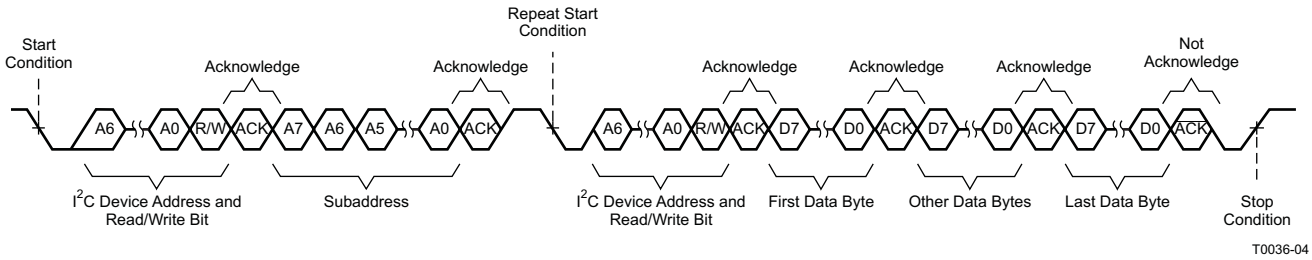

Figure 45. Multiple-Byte Read Transfer

Headphone Support in the TAS5715

The TAS5715 provides headphone PWM out that can drive a headphone amplifier. This feature cannot be used in lineout mode, because once the headphone is selected, the speaker is muted. See the headphone use model diagrams on how to use the headphone feature and quite turn on and off.

The headphone volume register is 0x0C. Headphone control bits are in the system control2 register (0x05).

Register 0x05 bit 4: This is headphone/speaker mode-select bit.

Bit 3: This bit selects the headphone volume to be same as speaker channel volume or headphone volume register (0x0C).

Bit 1: This bit is used to drive pin A_SEL_HP_SDZ as an output. This must be set to 1 if that pin is used. This pin is a multi-function pin. On reset, it is an input used for I²C address select. After coming out of reset, this pin can be programmed to be an output. It drives HP_SDZ when coming out of shutdown in headphone mode. The internal control state machine takes care of the timing on PWM switching and HP_SDZ going low to high to avoid start/stop clicks.

Copyright © 2010, Texas Instruments Incorporated

Bit 0: This is bit should be 1 if the headphone function is used in the TAS5715. If the headphone is not used, this bit can be cleared to 0. Then if bit 1 is also set to 1, the TAS5715 drives the FAULTZ signal out on the A_SEL pin. FAULTZ is the internal power-stage fault signal asserted low during errors like overcurrent, overtemperature, and UVP.

Figure 46 shows the connection of A_SEL_HP_SDZ pin to headphone shutdown.

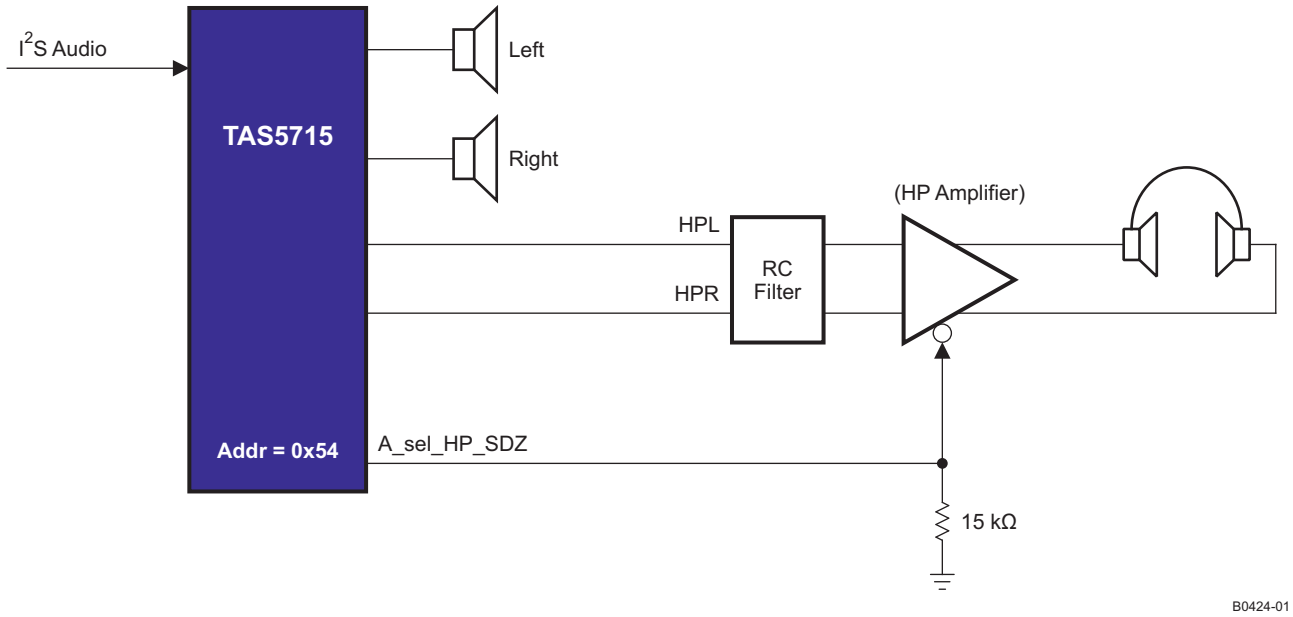

Figure 46. Headphone Shutdown (HP_SD)

Digital THD Manager

The THD manager can be used to achieve digitally the {specified ?} THD levels without voltage clipping. This allows the customer to achieve the same THD (for example, 10% THD) for different power levels (15 W/10 W/5 W) with same PVCC level.

The waveform of Figure 47 shows digital clipping using the THD manager.

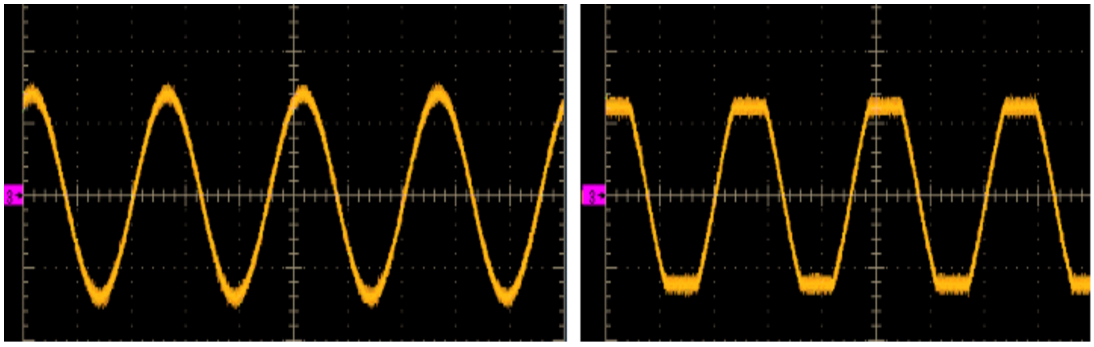

PVDD = 15.7 V
P_O = 6 W
No Clipping

PVDD = 15.7 V
P_O = 6 W
Clipped (10% THD)

C001

Figure 47. Digital Clipping Using the THD Manager

Register 0x57 is used to achieve the clipping. Register 0x56 is used to scale the clipped waveform to get the desired power out.

PWM DC Detection

The TAS5715 supports a PWM dc-detect function. This is to detect dc present in the input source and generated by another means in the blocks prior to PCM-to-PWM conversion.

If enabled (0x46, bit 10), the detection block checks for PWM duty cycle. If it is above the programmed threshold (0x0F, bits 7–4]) for more than the programmed duration of time (0x0F, bits 3–0), the PWM dc error flag is set on error register 0x02, bit 0.

This bit is set as long as the dc condition remains. Once the dc condition is gone, the bit is cleared automatically. The bit is cleared if detection is disabled.

Biquad Corruption Control

The TAS5715 supports this function to prevent issues when a biquad value is corrupted due an error in the I^2C line while updating biquads. The system controller writes a checksum for the biquads into the checksum register.

Once the EQ CRC detect function is enabled (0x46, bit 25), the TAS5715 periodically calculates a checksum for biquads in DAP memory and compare it with the expected checksum. If an error occurs, then the crc error flag is set in register 0x02, bit 3.

 Copyright © 2010, Texas Instruments Incorporated

Automatic Gain Limit (DRC)

The DRC scheme has a single programmable threshold. There is one ganged DRC for the high-band left/right channels and one DRC for the low-band left/right channels.

The DRC input/output diagram is shown in Figure 48.

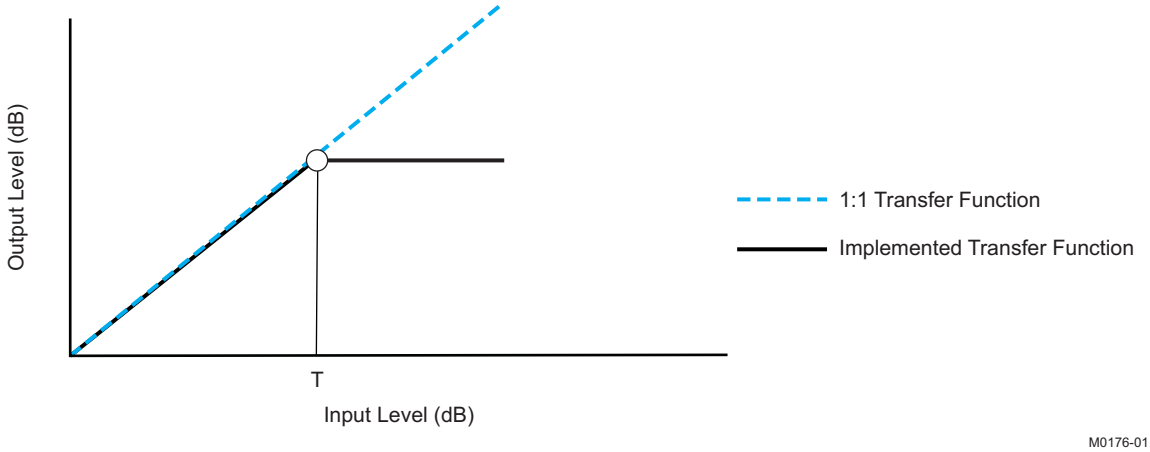

Professional-quality dynamic range compression automatically adjusts volume to flatten volume level.

- Each DRC has adjustable threshold levels.
- Programmable attack, release, and softening-filter constants
- *Transparent compression*: compressors can attack fast enough to avoid apparent clipping before engaging, and decay times can be set slow enough to avoid pumping.

Figure 48. Automatic Gain Limit

	Attack/Release	Softening Filter	Threshold
DRC1	0x3C	0x3B	0x40
DRC2	0x3F	0x3E	0x43

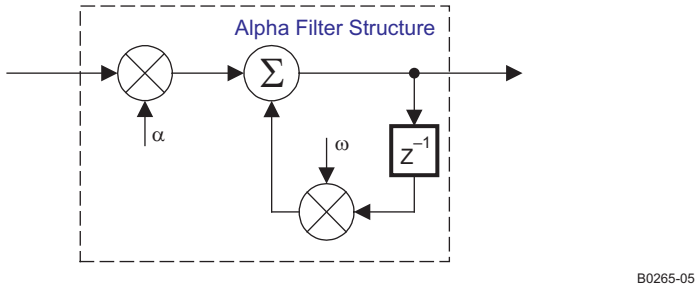

T = 9.23 format, all other DRC coefficients are 3.23 format

Figure 49. DRC Filter Structure

DRC acts more like a gain limiter (automatic gain limiter, AGL). The block works to reduce the peak of energy if it goes beyond the programmable threshold level. DRC starts an attack event (reduces gain) if energy goes above the threshold. Similarly, it starts a release event if the level goes below the threshold (increases gain back to the original value).

Attack and release events occur only when level remains above or below the threshold continuously during the time-constant time. And the constant time is controlled by the attack/release rate. If the attack/release rate is short, DRC operates frequently. Attack time defines how fast to cut the signal to bring it under the threshold. Similarly, release time defines how fast to release the *cut* back to normal. Attack and release are shown in Figure 50.

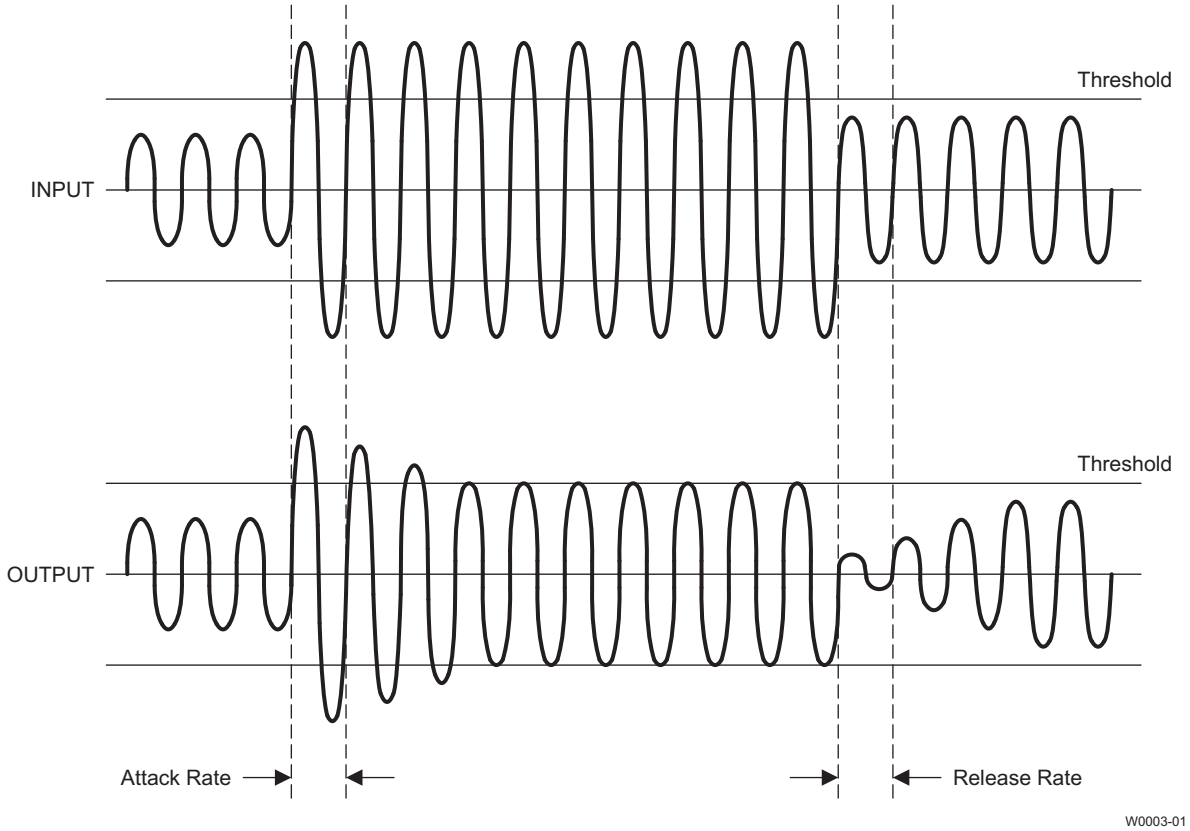

Figure 50. Attack/Release

The device should be in all-channel shutdown when DRC parameters are changed. The TAS57X GDE (GUI) takes care of this when changing DRC parameters.

TAS5715 supports two-band and one-band DRC. Two-band DRC helps to get the maximum sound levels out of small, thin, low-cost speakers. It protects speakers from being overdriven/damaged and stops cabinet rattle without sacrificing loudness.

In the two-band DRC mode, audio is split into to high-band and low-band. The bands have separate thresholds and attack/decay filters.

Configuration is as shown in Figure 51. DRC1 (upper band) and DRC2 (lower band) can be programmed using GDE. Default values for attack and decay filters cover most of the cases. Only thresholds require updating, depending on the power levels for the upper and lower bands.

 Copyright © 2010, Texas Instruments Incorporated

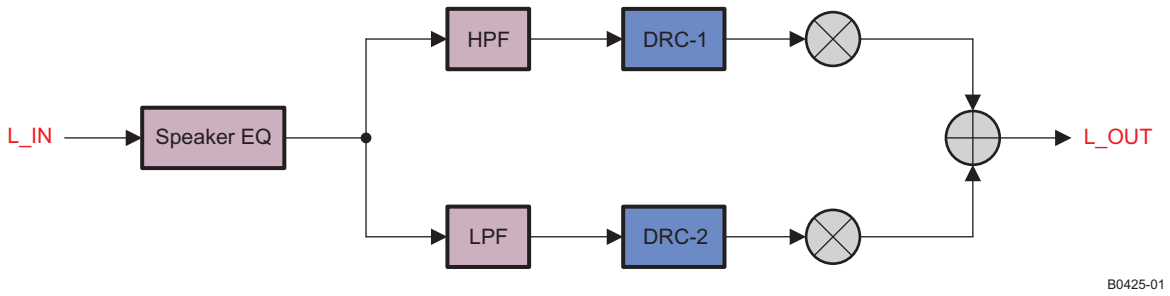

Figure 51. Two-Band DRC

A crossover biquad should be used only for two-band DRC. It should be all-pass for the one-band DRC mode. Only DRC1 (upper band) is used in the one-band DRC mode.

BANK SWITCHING

The TAS5715 uses an approach called *bank switching* together with automatic sample-rate detection. All processing features that must be changed for different sample rates are stored internally in three banks. The user can program which sample rates map to each bank. By default, bank 1 is used in 32-kHz mode, bank 2 is used in 44.1/48-kHz mode, and bank 3 is used for all other rates. Combined with the clock-rate autodetection feature, bank switching allows the TAS5715 to detect automatically a change in the input sample rate and switch to the appropriate bank without any MCU intervention.

An external controller configures bankable locations (0x29–0x36, 0x3A–0x3F, and 0x59,0x5D) for all three banks during the initialization sequence.

If automatic bank switching is enabled (register 0x50, bits 2:0) , then the TAS5715 automatically swaps the coefficients for subsequent sample rate changes, avoiding the need for any external controller intervention for a sample-rate change.

By default, bits 2:0 have the value 000; indicating that bank switching is disabled. In that state, updates to bankable locations take immediate effect. A write to register 0x50 with bits 2:0 being 001, 010, or 011 brings the system into the coefficient-bank-update state *update bank1*, *update bank2,* or *update bank3*, respectively. Any subsequent write to bankable locations updates the coefficient banks stored outside the DAP. After updating all the three banks, the system controller should issue a write to register 0x50 with bits 2:0 being 100; this changes the system state to automatic bank-switching mode. In automatic bank-switching mode, the TAS5715 automatically swaps banks based on the sample rate.

Command sequences for updating DAP coefficients can be summarized as follows:

1. **Bank switching disabled (default):** DAP coefficient writes take immediate effect and are not influenced by subsequent sample rate changes.

   OR

   Bank switching enabled:

   (a) Update bank-1 mode: Write 001 to bits 2:0 of reg 0x50. Load the 32-kHz coefficients.
   (b) Update bank-2 mode: Write 010 to bits 2:0 of reg 0x50. Load the 48-kHz coefficients.
   (c) Update bank-3 mode: Write 011 to bits 2:0 of reg 0x50. Load the other coefficients.
   (d) Enable automatic bank switching by writing 100 to bits 2:0 of reg 0x50.

26-Bit 3.23 Number Format

All mixer gain coefficients are 26-bit coefficients using a 3.23 number format. Numbers formatted as 3.23 numbers means that there are 3 bits to the left of the binary point and 23 bits to the right of the binary point. This is shown in Figure 52 .

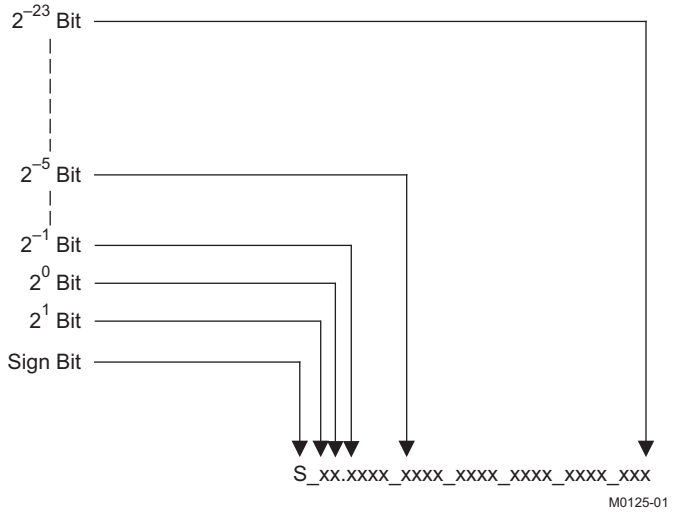

Figure 52. 3.23 Format

Copyright © 2010, Texas Instruments Incorporated

The decimal value of a 3.23 format number can be found by following the weighting shown in Figure 52. If the most significant bit is logic 0, the number is a positive number, and the weighting shown yields the correct number. If the most significant bit is a logic 1, then the number is a negative number. In this case every bit must be inverted, a 1 added to the result, and then the weighting shown in Figure 53 applied to obtain the magnitude of the negative number.

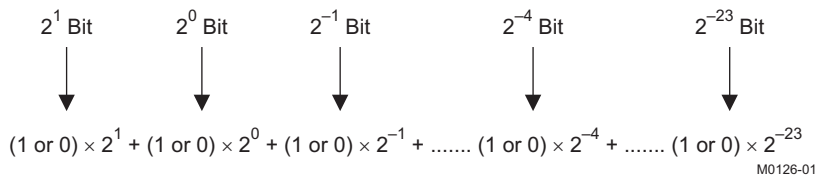

Figure 53. Conversion Weighting Factors—3.23 Format to Floating Point

Gain coefficients, entered via the I²C bus, must be entered as 32-bit binary numbers. The format of the 32-bit number (4-byte or 8-digit hexadecimal number) is shown in Figure 54

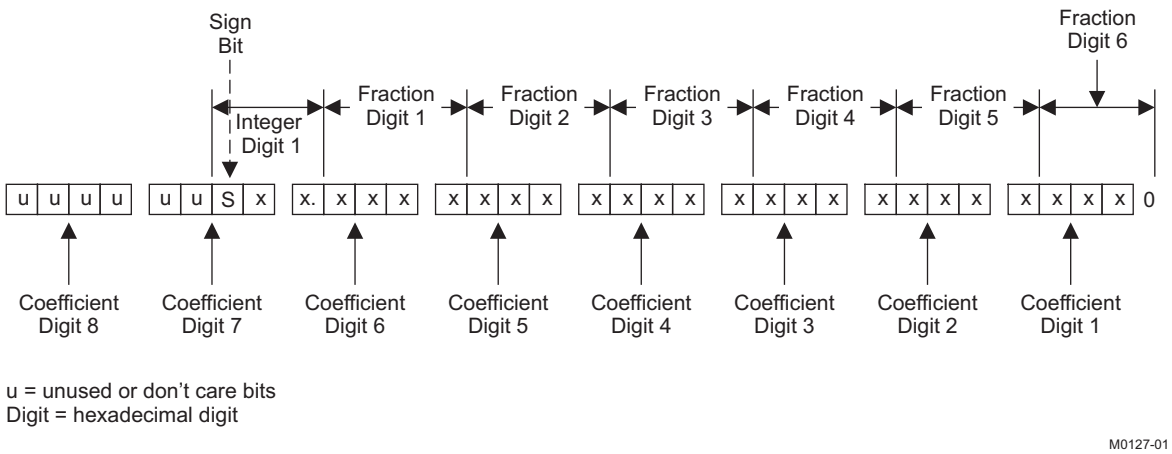

Figure 54. Alignment of 3.23 Coefficient in 32-Bit I²C Word

Table 1. Sample Calculation for 3.23 Format

db	Linear	Decimal	Hex (3.23 Format)
0	1	8,388,608	80 0000
5	1.77	14,917,288	00E3 9EA8
–5	0.56	4,717,260	0047 FACC
X	$L = 10^{(X/20)}$	D = 8388608 × L	H = dec2hex (D, 8)

Table 2. Sample Calculation for 9.17 Format

db	Linear	Decimal	Hex (9.17 Format)
0	1	131,072	20 000
5	1.77	231,997	38 A3D
–5	0.56	73,400	11 EB8
X	$L = 10^{(X/20)}$	D = 131,072 × L	H = dec2hex (D, 8)

Copyright © 2010, Texas Instruments Incorporated

Recommended Use Model

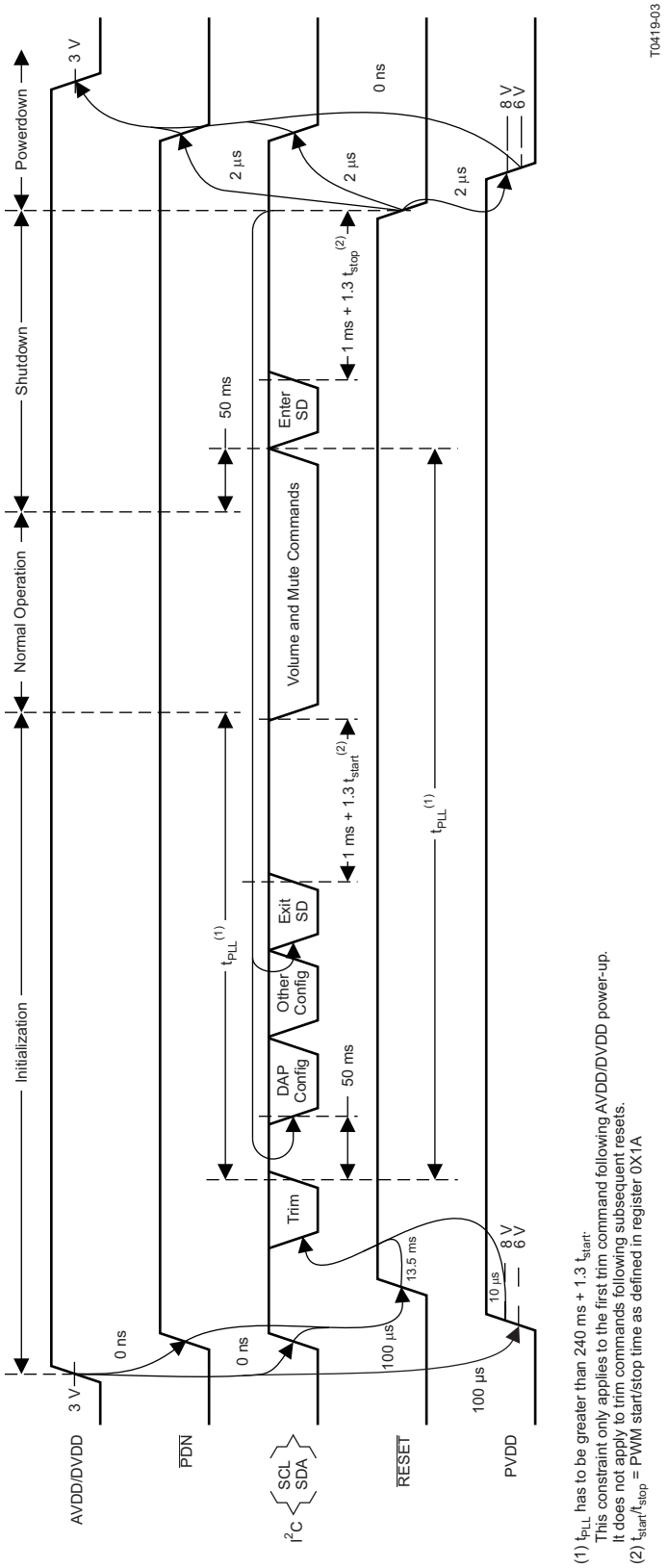

Figure 55. Recommended Command Sequence

Copyright © 2010, Texas Instruments Incorporated

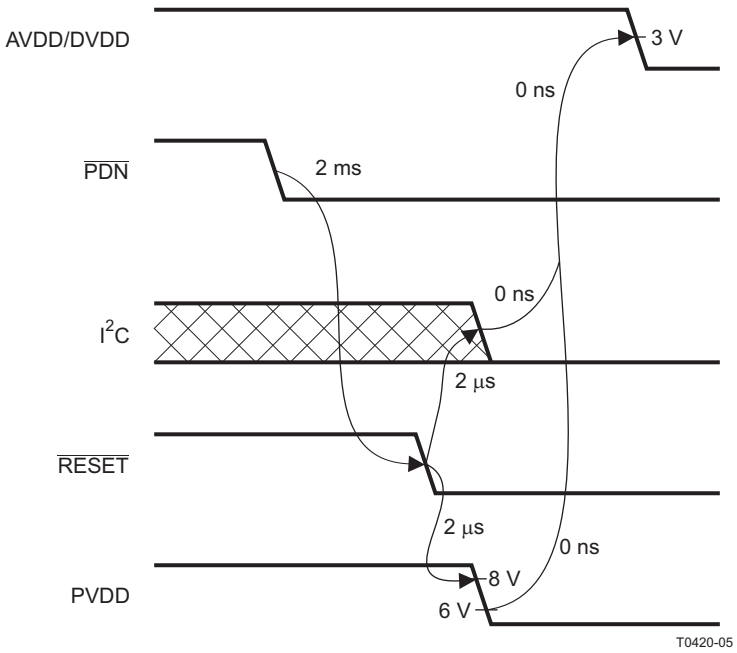

Figure 56. Power Loss Sequence

Initialization Sequence

Use the following sequence to power-up and initialize the device:

1. Hold all digital inputs low and ramp up AVDD/DVDD to at least 3V.
2. Initialize digital inputs and PVDD supply as follows:
   - Drive $\overline{\text{RESET}}$ = 0, $\overline{\text{PDN}}$ = 1, and other digital inputs to their desired state while ensuring that all are never more than 2.5V above AVDD/DVDD. Wait at least 100µs, drive $\overline{\text{RESET}}$ = 1, and wait at least another 13.5ms.
   - Ramp up PVDD to at least 8V while ensuring that it remains below 6V for at least 100µs after AVDD/DVDD reaches 3V. Then wait at least another 10µs.
3. Trim oscillator (write 0x00 to register 0x1B) and wait at least 50ms.
4. Configure the DAP via I^2C (see Users's Guide for typical values).
5. Configure remaining registers.
6. Exit shutdown (sequence defined below).

Normal Operation

The following are the only events supported during normal operation:

1. Writes to master/channel volume registers.
2. Writes to soft mute register.
3. Enter and exit shutdown (sequence defined below).
4. Clock errors and rate changes.

Note: Events 3 and 4 are not supported for 240ms+1.3*Tstart after trim following AVDD/DVDD powerup ramp (where Tstart is specified by register 0x1A).

Shutdown Sequence

Enter:

1. Ensure I^2S clocks have been stable and valid for at least 50ms.
2. Write 0x40 to register 0x05.
3. Wait at least 1ms+1.3*Tstop (where Tstop is specified by register 0x1A).
4. Once in shutdown, stable clocks are not required while device remains idle.
5. If desired, reconfigure by ensuring that clocks have been stable and valid for at least 50ms before returning to step 4 of initialization sequence.

Exit:

1. Ensure I^2S clocks have been stable and valid for at least 50ms.
2. Write 0x00 to register 0x05 (exit shutdown command may not be serviced for as much as 240ms after trim following AVDD/DVDD powerup ramp).
3. Wait at least 1ms+1.3*Tstart (where Tstart is specified by register 0x1A).
4. Proceed with normal operation.

Powerdown Sequence

Use the following sequence to powerdown the device and its supplies:

1. If time permits, enter shutdown (sequence defined above); else, in case of sudden power loss, assert $\overline{PDN}$ = 0 and wait at least 2ms.
2. Assert $\overline{RESET}$ = 0.
3. Drive digital inputs low and ramp down PVDD supply as follows:
   - Drive all digital inputs low after $\overline{RESET}$ has been low for at least 2µs.
   - Ramp down PVDD while ensuring that it remains above 8V until $\overline{RESET}$ has been low for at least 2µs.
4. Ramp down AVDD/DVDD while ensuring that it remains above 3V until PVDD is below 6V and that it is never more than 2.5V below the digital inputs.

Copyright © 2010, Texas Instruments Incorporated

Headphone Usage

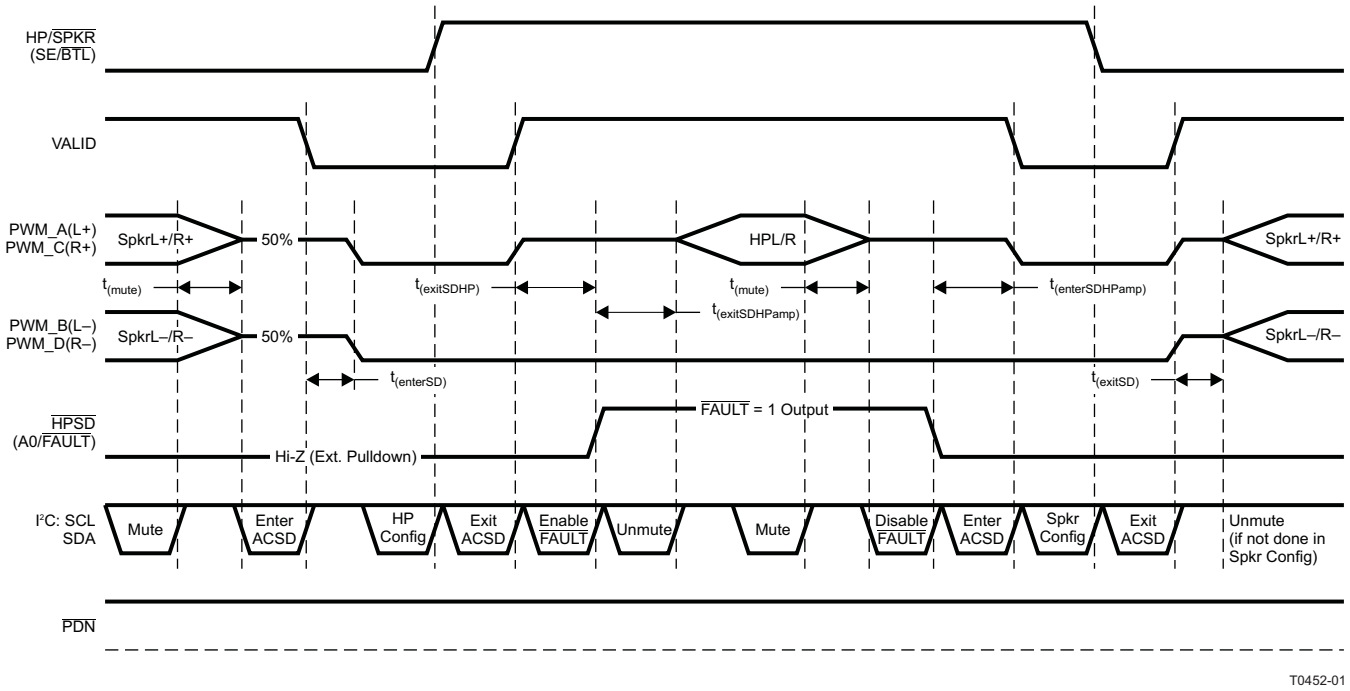

Headphone/Speaker Configuration

PARAMETER	DESCRIPTION	MIN	TYP	MAX	UNIT
$t_{(mute)}$	Mute volume ramp wait time ($t_{(volramp)}$ given by register 0x0E <2:0>)	5 + 1.3 × $t_{(volramp)}$			ms
$t_{(exitSD)}$	Exit shutdown wait time before issuing further commands to device ($t_{(start)}$ given by regioster 0x1A<4:0>)	1 + 1.3 × $t_{(start)}$			ms
$t_{(enterSD)}$	Enter shutdown wait time before issuing further commands to device ($t_{(stop)}$ given by regioster 0x1A<4:0>)	1 + 1.3 × $t_{(stop)}$			ms
$t_{(exitSDHP)}$	Exit shutdown wait time before enabling external headphone amp ($t_{(HPchg)}$ given by register 0x1A<6:5>)	1 + 1.3 × $t_{(HPchg)}$			ms
$t_{(exitSDHPamp)}$	Headphone amp exit shutdown wait time before unmuting ($t_{(HPamp)}$ given by register 0x1C<7:4>)	1 + 1.3 × $t_{(HPamp)}$			ms
$t_{(enterSDHPamp)}$	Headphone amp enter shutdown wait time before entering ACSD ($t_{(HPamp)}$ given by register 0x1C<7:4>)	1 + 1.3 × $t_{(HPamp)}$			ms

Figure 57. Headphone Control Use Model

Speaker Configuration

- Registers 0x07–0x0B — Master/channel speaker volume
- Register 0x19 — SDG = 0x30 or 0x00 (no channels in SDG)
- Registers 0x11–0x12 — ICD1/2 = {0xB8, 0x60}
- Register 0x1A<7> — Clear bit for speaker mode (HP/$\overline{\text{SPKR}}$ = 0)
- Register 0x1A<4:0> — Set to 0 1000 for 16.5-ms start/stop period
- Register 0x20<23> — Set bit for Ch1 BD mode
- Register 0x20<19> — Set bit for Ch2 BD mode
- Register 0x46<1:0> — Set both bits to enable DRC1 and DRC2
- Register 0x50<7> — Clear bit to enable EQ

Headphone Configuration

- Registers 0x07–0x0B Master/channel headphone volume
- Register 0x19 SDG = 0x30 or 0x00 (PWM3/4 in SDG)
- Registers 0x11–0x12 ICD1/2 = {0xAC, 0x54}
- Register 0x1A<7> Clear bit for headphone mode (HP/$\overline{\text{SPKR}}$ = 0)
- Register 0x1A<4:0> Set to 0 0000 for 0-ms start/stop period
- Register 0x20<23> Clear bit for Ch1 AD mode
- Register 0x20<19> Clear bit for Ch2 AD mode
- Register 0x46<1:0> Clear both bits to disable DRC1 and DRC2
- Register 0x50<7> Set bit to disable EQ

Headphone Mode Power Down

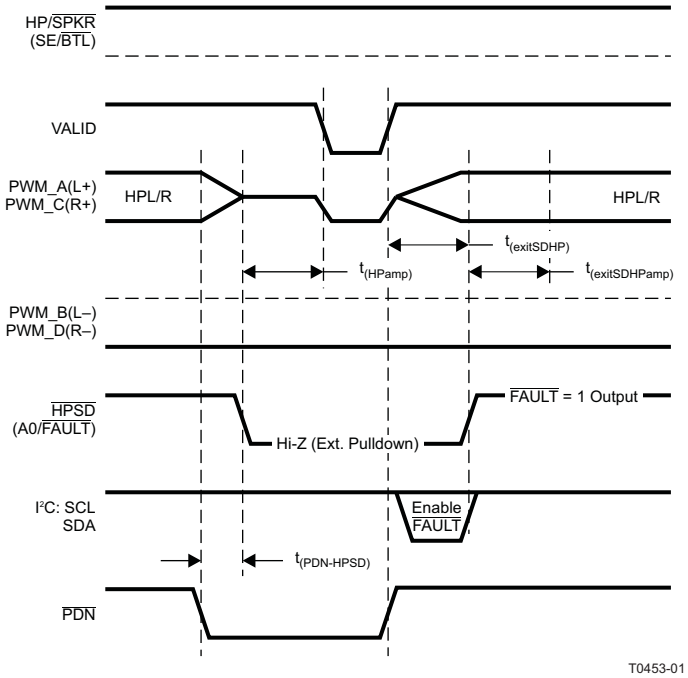

PARAMETER	DESCRIPTION	MIN	TYP	MAX	UNIT
$t_{(PDN\text{-}HPSD)}$	Delay from power-down event to headphone amplifier shutdown assertion			2	ms
$t_{(exitSDHP)}$	Exit shutdown wait time before enabling external headphone amp ($t_{(HPchg)}$ given by register 0x1A<6:5>)	$1 + 1.3 \times t_{(HPchg)}$			ms
$t_{(exitSDHPamp)}$	Headphone amp exit shutdown wait time before unmuting ($t_{(HPamp)}$ given by register 0x1C<7:4>)	$1 + 1.3 \times t_{(HPamp)}$			ms
$t_{(HPamp)}$	Headphone amp enable/disable wait time (given by register 0x1C<7:4>)		$t_{(HPamp)}$		ms

Figure 58. Headphone Control Power Down

Copyright © 2010, Texas Instruments Incorporated

Headphone-Mode All-Channel Shutdown

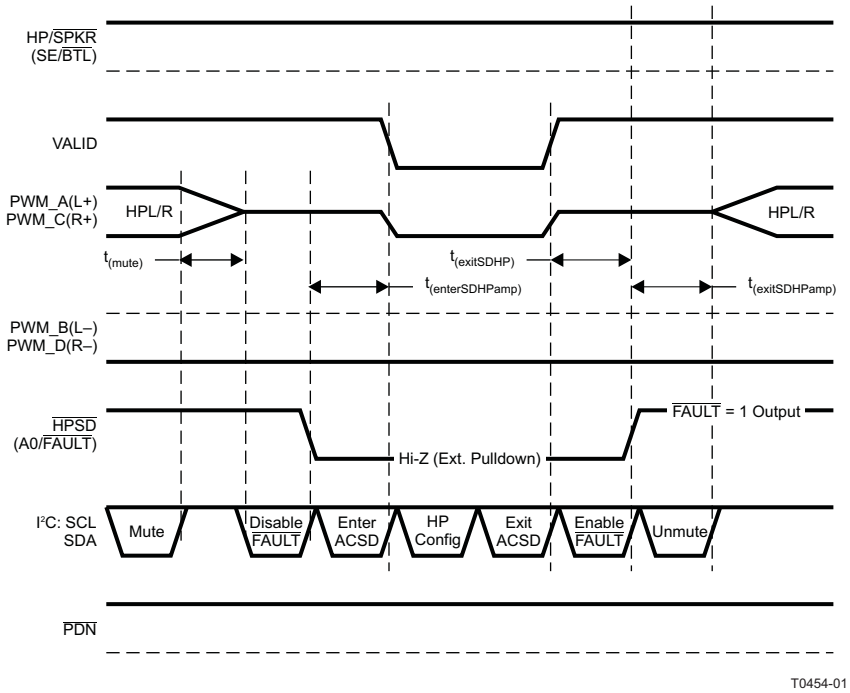

PARAMETER	DESCRIPTION	MIN	TYP	MAX	UNIT
$t_{(mute)}$	Mute volume ramp wait time ($t_{(volramp)}$ given by register 0x0E <2:0>)	5 + 1.3 × $t_{(volramp)}$			ms
$t_{(exitSDHP)}$	Exit shutdown wait time before enabling external headphone amp ($t_{(HPchg)}$ given by register 0x1A<6:5>)	1 + 1.3 × $t_{(HPchg)}$			ms
$t_{(exitSDHPamp)}$	Headphone amp exit shutdown wait time before unmuting ($t_{(HPamp)}$ given by register 0x1C<7:4>)	1 + 1.3 × $t_{(HPamp)}$			ms
$t_{(enterSDHPamp)}$	Headphone amp enter shutdown wait time before entering ACSD ($t_{(HPamp)}$ given by register 0x1C<7:4>)	1 + 1.3 × $t_{(HPamp)}$			ms

Figure 59. Headphone Control ACSD

Applying Soft Reset

To soft-reset the device, write 0x01 to register 0xC8. Once soft reset is applied, I²C commands should not be sent for a duration of 2 × (1 ms + 1.3 × $t_{(start/stop)}$) + 13.5 ms.

Restrictions in Using 432-kHz Output Switching

- Only 48-kHz LRCLK is supported. The maximum allowed variance on LRCLK is 1%.
- The maxmimum allowed MCLK frequency is 12.288 MHz + 1%.
- Only 64-f_S SCLK is supported.
- PWM headphone output is not supported.

I²C Commands to enable 423-kHz Switching

All I²C write operations should be at 100 kHz when used in this higher switching mode.

No 400-kHz I²C is supported when used in this mode.

To switch into 432-kHz switching mode, send the following commands before sending the *exit shutdown* command to register 0x05.

- Write to register 0xF8 with a value of 0xA5A5A5A5.

- Write to register 0xC9 with a value of 0x000600EA.
- Write to register 0xCA with a value of 0x0000000000000098. Note that register 0xCA is a write-only register. Reads from this register are prohibited.
- Write to register 0x03 with a value of 0x88.
- Write to register 0x00 with a value of 0x6D.
- Write to register 0x00 with a value of 0x6C.
- Write to register 0x03 with a value of 0x80.
- Write to register 0x05 with a value of 0x00.

Copyright © 2010, Texas Instruments Incorporated

Table 3. Serial Control Interface Register Summary

SUBADDRESS	REGISTER NAME	NO. OF BYTES	CONTENTS	INITIALIZATION VALUE
			A u indicates unused bits.	
0x00	Clock control register	1	Description shown in subsequent section	0x6C
0x01	Device ID register	1	Description shown in subsequent section	0x42
0x02	Error status register	1	Description shown in subsequent section	0x00
0x03	System control register 1	1	Description shown in subsequent section	0xA0
0x04	Serial data interface register	1	Description shown in subsequent section	0x05
0x05	System control register 2	1	Description shown in subsequent section	0x40
0x06	Soft mute register	1	Description shown in subsequent section	0x00
0x07	Master volume	1	Description shown in subsequent section	0xFF (mute)
0x08	Channel 1 vol	1	Description shown in subsequent section	0x30 (0 dB)
0x09	Channel 2 vol	1	Description shown in subsequent section	0x30 (0 dB)
0x0A	Channel 3 vol	1	Description shown in subsequent section	0x30 (0 dB)
0x0B–0x0D		1	Reserved (1)	
0x0E	Volume configuration register	1	Description shown in subsequent section	0x90
0x0F	Max duty cycle register	1	Description shown in subsequent section	0x97
0x10	Modulation limit register	1	Description shown in subsequent section	0x01
0x11	IC delay channel 1	1	Description shown in subsequent section	0xAC
0x12	IC delay channel 2	1	Description shown in subsequent section	0x54
0x13	IC delay channel 3	1	Description shown in subsequent section	0xAC
0x14	IC delay channel 4	1	Description shown in subsequent section	0x54
0x15–0x19		1	Reserved (1)	
0x1A	Start/stop period register	1		0x68
0x1B	Oscillator trim register	1		0x82
0x1C	BKND_ERR register	1		0x57
0x1D–0x1F		1	Reserved (1)	
0x20	Input MUX register	4	Description shown in subsequent section	0x0001 7772
0x21		4	Reserved (1)	0x0000 4303
0x22–0x24		4	Reserved (1)	
0x25	PWM MUX register	4	Description shown in subsequent section	0x0102 1345
0x26–0x28		4	Reserved (1)	
0x29	ch1_bq[0]	20	u[31:26], b0[25:0]	0x0080 0000
			u[31:26], b1[25:0]	0x0000 0000
			u[31:26], b2[25:0]	0x0000 0000
			u[31:26], a1[25:0]	0x0000 0000
			u[31:26], a2[25:0]	0x0000 0000
0x2A	ch1_bq[1]	20	u[31:26], b0[25:0]	0x0080 0000
			u[31:26], b1[25:0]	0x0000 0000
			u[31:26], b2[25:0]	0x0000 0000
			u[31:26], a1[25:0]	0x0000 0000
			u[31:26], a2[25:0]	0x0000 0000

(1) Reserved registers should not be accessed.

Copyright © 2010, Texas Instruments Incorporated

Table 3. Serial Control Interface Register Summary (continued)

SUBADDRESS	REGISTER NAME	NO. OF BYTES	CONTENTS	INITIALIZATION VALUE
0x2B	ch1_bq[2]	20	u[31:26], b0[25:0]	0x0080 0000
			u[31:26], b1[25:0]	0x0000 0000
			u[31:26], b2[25:0]	0x0000 0000
			u[31:26], a1[25:0]	0x0000 0000
			u[31:26], a2[25:0]	0x0000 0000
0x2C	ch1_bq[3]	20	u[31:26], b0[25:0]	0x0080 0000
			u[31:26], b1[25:0]	0x0000 0000
			u[31:26], b2[25:0]	0x0000 0000
			u[31:26], a1[25:0]	0x0000 0000
			u[31:26], a2[25:0]	0x0000 0000
0x2D	ch1_bq[4]	20	u[31:26], b0[25:0]	0x0080 0000
			u[31:26], b1[25:0]	0x0000 0000
			u[31:26], b2[25:0]	0x0000 0000
			u[31:26], a1[25:0]	0x0000 0000
			u[31:26], a2[25:0]	0x0000 0000
0x2E	ch1_bq[5]	20	u[31:26], b0[25:0]	0x0080 0000
			u[31:26], b1[25:0]	0x0000 0000
			u[31:26], b2[25:0]	0x0000 0000
			u[31:26], a1[25:0]	0x0000 0000
			u[31:26], a2[25:0]	0x0000 0000
0x2F	ch1_bq[6]	20	u[31:26], b0[25:0]	0x0080 0000
			u[31:26], b1[25:0]	0x0000 0000
			u[31:26], b2[25:0]	0x0000 0000
			u[31:26], a1[25:0]	0x0000 0000
			u[31:26], a2[25:0]	0x0000 0000
0x30	ch2_bq[0]	20	u[31:26], b0[25:0]	0x0080 0000
			u[31:26], b1[25:0]	0x0000 0000
			u[31:26], b2[25:0]	0x0000 0000
			u[31:26], a1[25:0]	0x0000 0000
			u[31:26], a2[25:0]	0x0000 0000
0x31	ch2_bq[1]	20	u[31:26], b0[25:0]	0x0080 0000
			u[31:26], b1[25:0]	0x0000 0000
			u[31:26], b2[25:0]	0x0000 0000
			u[31:26], a1[25:0]	0x0000 0000
			u[31:26], a2[25:0]	0x0000 0000
0x32	ch2_bq[2]	20	u[31:26], b0[25:0]	0x0080 0000
			u[31:26], b1[25:0]	0x0000 0000
			u[31:26], b2[25:0]	0x0000 0000
			u[31:26], a1[25:0]	0x0000 0000
			u[31:26], a2[25:0]	0x0000 0000
0x33	ch2_bq[3]	20	u[31:26], b0[25:0]	0x0080 0000
			u[31:26], b1[25:0]	0x0000 0000
			u[31:26], b2[25:0]	0x0000 0000
			u[31:26], a1[25:0]	0x0000 0000
			u[31:26], a2[25:0]	0x0000 0000

Copyright © 2010, Texas Instruments Incorporated

Table 3. Serial Control Interface Register Summary (continued)

SUBADDRESS	REGISTER NAME	NO. OF BYTES	CONTENTS	INITIALIZATION VALUE
0x34	ch2_bq[4]	20	u[31:26], b0[25:0]	0x0080 0000
			u[31:26], b1[25:0]	0x0000 0000
			u[31:26], b2[25:0]	0x0000 0000
			u[31:26], a1[25:0]	0x0000 0000
			u[31:26], a2[25:0]	0x0000 0000
0x35	ch2_bq[5]	20	u[31:26], b0[25:0]	0x0080 0000
			u[31:26], b1[25:0]	0x0000 0000
			u[31:26], b2[25:0]	0x0000 0000
			u[31:26], a1[25:0]	0x0000 0000
			u[31:26], a2[25:0]	0x0000 0000
0x36	ch2_bq[6]	20	u[31:26], b0[25:0]	0x0080 0000
			u[31:26], b1[25:0]	0x0000 0000
			u[31:26], b2[25:0]	0x0000 0000
			u[31:26], a1[25:0]	0x0000 0000
			u[31:26], a2[25:0]	0x0000 0000
0x37	EQ CRC	4	u[31:16], EQ CRC [15:0]	0x0000 A14C
0x38	DRC CRC	4	u[31:16], DRC CRC [15:0]	0x0000 5395
0x39			Reserved (2)	0x0000 0000
0x3A		8	Reserved (2)	0x0080 0000
0x3B	DRC1 softening filter alpha	8	u[31:26], ae[25:0]	0x0008 0000
	DRC1 softening filter omega		u[31:26], oe[25:0]	0x0078 0000
0x3C	DRC1 attack rate	8		0x0000 0100
	DRC1 release rate			0xFFFF FF00
0x3D		8	Reserved (2)	0x0080 0000
0x3E	DRC2 softening filter alpha	8	u[31:26], ae[25:0]	0x0008 0000
	DRC2 softening filter omega		u[31:26], oe[25:0]	0xFFF8 0000
0x3F	DRC2 attack rate	8	u[31:26], at[25:0]	0x0008 0000
	DRC2 release rate		u[31:26], rt[25:0]	0xFFF8 0000
0x40	DRC1 attack threshold	8	T1[31:0] (9.23 format)	0x0800 0000
	DRC1 release threshold		T1'[31:0]	0x07FF FFFF
0x42		4	Reserved (2)	0x0000 0000
0x43	DRC2 attack threshold	8	T2[31:0] (9.23 format)	0x0074 0000
	DRC2 release threshold		T2'[31:0]	0x0073 FFFF
0x45		4	Reserved (2)	0x0000 0000
0x46	DRC and DC DETECT control	4	Description shown in subsequent section	0x0002 0020
0x47–0x4F		4	Reserved (2)	
0x50	Bank switch control	4	Description shown in subsequent section	0x0F70 8000
0x51	Ch 1 output mixer	8	Ch 1 output mix1[1]	0x0080 0000
			Ch 1 output mix1[0]	0x0000 0000
0x52	Ch 2 output mixer	8	Ch 2 output mix2[1]	0x0080 0000
			Ch 2 output mix2[0]	0x0000 0000
0x53	Ch 1 input mixers	16	Channel-1 input mixers can be accessed using I^2C subaddresses 0x70–0x73 using 4-byte access	

(2) Reserved registers should not be accessed.

Copyright © 2010, Texas Instruments Incorporated

Table 3. Serial Control Interface Register Summary (continued)

SUBADDRESS	REGISTER NAME	NO. OF BYTES	CONTENTS	INITIALIZATION VALUE
0x54	Ch 2 input mixers	16	Channel-2 input mixers can be accessed using I^2C subaddresses 0x74–0x77 using 4-byte access	
0x56	Output post-scale	4	u[31:26], post[25:0]	0x0080 0000
0x57	Output pre-scale	4	u[31:26], pre[25:0] (9.17 format)	0x0002 0000
0x59	ch1 BQ[7] (DRC1 BQ)	20	u[31:26], b0[25:0]	0x0080 0000
			u[31:26], b1[25:0]	0x0000 0000
			u[31:26], b2[25:0]	0x0000 0000
			u[31:26], a1[25:0]	0x0000 0000
			u[31:26], a2[25:0]	0x0000 0000
0x5D	ch2 BQ[8] (DRC2 BQ)	20	u[31:26], b0[25:0]	0x0080 0000
			u[31:26], b1[25:0]	0x0000 0000
			u[31:26], b2[25:0]	0x0000 0000
			u[31:26], a1[25:0]	0x0000 0000
			u[31:26], a2[25:0]	0x0000 0000
0x62	IDF post scale	4		0x0000 0080
0x63–0x6F			Reserved (3)	0x0000 0000
0x70	ch1 DRC cross-over_mixer_1	4	Ch 1 Input mixer[3]	0x0080 0000
0x71		4	Reserved (3)	0x0000 0000
0x72		4	Ch 1 Input mixer[1]; THIS NODE is RESERVED as ZERO	0x0000 0000
0x73	ch1 Input Sclaer	4	Ch 1 Input mixer[0]	0x0080 0000
0x74	ch2 DRC cross-over_mixer_1	4	Ch 2 Input mixer[3]	0x0080 0000
0x75		4	Reserved (3)	0x0000 0000
0x76		4	Ch 2 Input mixer[1]; THIS NODE is RESERVED as ZERO	0x0000 0000
0x77	ch2 Input Scaler	4	Ch 2 Input mixer[0]	0x0080 0000
0x78–0xC7			Reserved (3)	0x0000 0000
0xC8	Soft Reset Register [bit 0]	4	Soft Reset Reg (bit [0] = 1 assert soft reset to the device)	0x0000 0000
0xC9–0xF7			Reserved (3)	0x0000 0000
0xF8		4	Reserved (3)	0x0000 0000
0xF9	Update Dev Address Reg	4	u[31:8],New Dev Id[7:0] (New Dev Id = 0x38 for TAS5715)	0x0000 0036
0xFE	Repeat Sub Address	4	Append the write to previous write	
0xFA–0xFF		4	Reserved (3)	0x0000 0000

(3) Reserved registers should not be accessed.

All DAP coefficients are 3.23 format unless specified otherwise.

Registers 0x3B through 0x46 should be altered only during the initialization phase.

Copyright © 2010, Texas Instruments Incorporated

CLOCK CONTROL REGISTER (0x00)

The clocks and data rates are automatically determined by the TAS5715. The clock control register contains the auto-detected clock status. Bits D7–D5 reflect the sample rate. Bits D4–D2 reflect the MCLK frequency.

Table 4. Clock Control Register (0x00)

D7	D6	D5	D4	D3	D2	D1	D0	FUNCTION
0	0	0	–	–	–	–	–	f_S = 32-kHz sample rate
0	0	1	–	–	–	–	–	Reserved (1)
0	1	0	–	–	–	–	–	Reserved (1)
0	**1**	**1**	**–**	**–**	**–**	–	**–**	**f_S = 44.1/48-kHz sample rate (2)**
1	0	0	–	–	–	–	–	f_S = 16-kHz sample rate
1	0	1	–	–	–	–	–	f_S = 22.05/24 -kHz sample rate
1	1	0	–	–	–	–	–	f_S = 8-kHz sample rate
1	1	1	–	–	–	–	–	f_S = 11.025/12-kHz sample rate
–	–	–	0	0	0	–	–	MCLK frequency = 64 × f_S (3)
–	–	–	0	0	1	–	–	MCLK frequency = 128 × f_S (3)
–	–	–	0	1	0	–	–	MCLK frequency = 192 × f_S (4)
–	**–**	**–**	**0**	**1**	**1**	**–**	**–**	**MCLK frequency = 256 × f_S (2) (5)**
–	–	–	1	0	0	–	–	MCLK frequency = 384 × f_S
–	–	–	1	0	1	–	–	MCLK frequency = 512 × f_S
–	–	–	1	1	0	–	–	Reserved (1)
–	–	–	1	1	1	–	–	Reserved (1)
–	–	–	–	–	–	**0**	–	**Reserved (1)**
–	**–**	**–**	–	**–**	**–**	**–**	**0**	**Reserved (1)**

(1) Reserved registers should not be accessed.
(2) Default values are in **bold**.
(3) Only available for 44.1-kHz and 48-kHz rates
(4) Rate only available for 32/44.1/48-KHz sample rates
(5) Not available at 8 kHz

DEVICE ID REGISTER (0x01)

The device ID register contains the ID code for the firmware revision.

Table 5. General Status Register (0x01)

D7	D6	D5	D4	D3	D2	D1	D0	FUNCTION
0	**1**	**0**	**0**	**0**	**0**	**1**	**0**	**Identification code**

ERROR STATUS REGISTER (0x02)

The error bits are sticky and are not cleared by the hardware. This means that the software must clear the register (write zeroes) and then read them to determine if they are persistent errors.

Error definitions:

- MCLK error : MCLK frequency is changing. The number of MCLKs per LRCLK is changing.
- SCLK error: The number of SCLKs per LRCLK is changing.
- LRCLK error: LRCLK frequency is changing.
- Frame slip: LRCLK phase is drifting with respect to internal frame sync.
- DC detect: This flag is set if PWM dc detect is enabled and dc is detected in the PWM block.

Table 6. Error Status Register (0x02)

D7	D6	D5	D4	D3	D2	D1	D0	FUNCTION
1	–	–	–	–	–	–	–	MCLK error
–	1	–	–	–	–	–	–	PLL autolock error
–	–	1	–	–	–	–	–	SCLK error
–	–	–	1	–	–	–	–	LRCLK error
–	–	–	–	1	–	–	–	EQ flag
–	–	–	–	–	1	–	–	DRC flag
–	–	–	–	–	–	1	–	Overcurrent, overtemperature, overvoltage, or undervoltage errors
–	–	–	–	–	–	–	1	PWM DC-detect flag
0	**0**	**0**	**0**	**0**	**0**	**0**	**0**	**No errors** (1)

(1) Default values are in **bold**.

SYSTEM CONTROL REGISTER 1 (0x03)

The system control register 1 has several functions:

Bit D7: If 0, the dc-blocking filter for each channel is disabled.
If 1, the dc-blocking filter (–3 dB cutoff <1 Hz) for each channel is enabled (default).

Bit D5: If 0, use soft unmute on recovery from clock error. This is a slow recovery. Unmute takes the same time as the volume ramp defined in register 0x0E.
If 1, use hard unmute on recovery from clock error (default). This is a fast recovery, a single-step volume ramp.

Bits D1–D0: Select de-emphasis

Copyright © 2010, Texas Instruments Incorporated

Table 7. System Control Register 1 (0x03)

D7	D6	D5	D4	D3	D2	D1	D0	FUNCTION
0	–	–	–	–	–	–	–	PWM high-pass (dc blocking) disabled
1	–	–	–	–	–	–	–	**PWM high-pass (dc blocking) enabled** (1)
–	**0**	–	–	–	–	–	–	**Reserved** (1)
–	–	0	–	–	–	–	–	Soft unmute on recovery from clock error
–	–	**1**	–	–	–	–	–	**Hard unmute on recovery from clock error** (1)
–	–	–	**1**	–	–	–	–	**Reserved** (1)
–	–	–	–	**0**	–	–	–	**Reserved** (1)
–	–	–	–	–	**0**	–	–	**Reserved**(1)
–	–	–	–	–	–	**0**	**0**	**No de-emphasis** (1)
–	–	–	–	–	–	0	1	De-emphasis for f_S = 32 kHz
–	–	–	–	–	–	1	0	De-emphasis for f_S = 44.1 kHz
–	–	–	–	–	–	1	1	De-emphasis for f_S = 48 kHz

(1) Default values are in **bold**.

SERIAL DATA INTERFACE REGISTER (0x04)

As shown in Table 8, the TAS5715 supports nine serial data modes. The default is 24-bit, I^2S mode.

Table 8. Serial Data Interface Control Register (0x04) Format

RECEIVE SERIAL DATA INTERFACE FORMAT	WORD LENGTH	D7–D4	D3	D2	D1	D0
Right-justified	16	0000	0	0	0	0
Right-justified	20	0000	0	0	0	1
Right-justified	24	0000	0	0	1	0
I^2S	16	000	0	0	1	1
I^2S	20	0000	0	1	0	0
I^2S (1)	**24**	**0000**	**0**	**1**	**0**	**1**
Left-justified	16	0000	0	1	1	0
Left-justified	20	0000	0	1	1	1
Left-justified	24	0000	1	0	0	0
Reserved		0000	1	0	0	1
Reserved		0000	1	0	1	0
Reserved		0000	1	0	1	1
Reserved		0000	1	1	0	0
Reserved		0000	1	1	0	1
Reserved		0000	1	1	1	0
Reserved		0000	1	1	1	1

(1) Default values are in **bold**.

Copyright © 2010, Texas Instruments Incorporated

SYSTEM CONTROL REGISTER 2 (0x05)

When bit D6 is set low, the system exits all-channel shutdown and starts playing audio; otherwise, the outputs are shut down (hard mute).

Table 9. System Control Register 2 (0x05)

D7	D6	D5	D4	D3	D2	D1	D0	FUNCTION
0	–	–	–	–	–	–	–	**Reserved**(1)
–	0	–	–	–	–	–	–	Exit all-channel shutdown (normal operation)(2)
–	**1**	–	–	–	–	–	–	**Enter all-channel shutdown (hard mute)(1)**
–	–	**0**	**-**	**-**	**–**	**–**	–	**Reserved (1)**
–	–	–	1	–	–	–	–	Headphone Mode
–	–	–	**0**	–	–	–	–	**Speaker Mode**
–	–	–	–	1	–	–	**–**	Channel Volume in Headphone Mode = 0x08/0x09 (same as speaker channel volume reg)
–	–	–	–	**0**	–	–	**–**	**Channel VOlume in Headphone Mode = 0x0C (headphone volume reg)** (1)
–	–	–	–	–	**0**	–	–	**Reserved (1)**
–	–	–	–	–	–	**0**	–	A_SEL/HP_SD configured as input
–	–	–	–	–	–	1	–	A_SEL/HP_SD configured configured as output to use as external HP amplifier shutdown signal
–	–	–	–	–	–	–	**0**	Internal power stage $\overline{\text{FAULT}}$ signal is the source of A_SEL/HP_SD pin
–	–	–	–	–	–	–	1	HPSDZ is the source of A_SEL/HP_SD pin (*set this before switching to headphone mode*)

(1) Default values are in **bold**.
(2) When exiting all-channel shutdown, soft unmute is might not occur unless register 0x03, bit 5 is set to 1.

SOFT MUTE REGISTER (0x06)

Writing a 1 to any of the following bits sets the output of the respective channel to 50% duty cycle (soft mute).

Table 10. Soft Mute Register (0x06)

D7	D6	D5	D4	D3	D2	D1	D0	FUNCTION
0	**0**	**0**	**0**	**0**	–	–	–	**Reserved**(1)
–	–	–	–	–	1	–	–	Soft mute channel 3
–	–	–	–	–	**0**	–	–	**Soft unmute channel 3**
–	–	–	–	–	–	1	–	Soft mute channel 2
–	–	–	–	–	–	**0**	–	**Soft unmute channel 2**
–	–	–	–	–	–	–	1	Soft mute channel 1
–	–	–	–	–	–	–	**0**	**Soft unmute channel 1**

(1) Default values are in **bold**.

Copyright © 2010, Texas Instruments Incorporated

VOLUME REGISTERS (0x07, 0x08, 0x09, 0x0C)

Step size is 0.5 dB.

Master volume	– 0x07 (default is mute)
Channel-1 volume	– 0x08 (default is 0 dB)
Channel-2 volume	– 0x09 (default is 0 dB)
Headphone volume	– 0x0C (default is 0 dB)

Volume in the TAS5715 is not intended for dynamic changes. Channel volumes are set during initialization. Master volume is written with a value 0xFF to MUTE and with a value of 0x30 to UNMUTE during normal mode.

When DRC functionality is used, the maximum allowed volume (sum of channel and master volume) is 15.5 dB.

When DRC is enabled, a MUTE command does not completely mute the system. The actual mute level depends on the volume settings and modulation index.

FINE VOLUME SETTING:

TAS5715 has input mixers (0x73 , 0x77) that can be fine-tuned with a 3.23 format number to achieve the fine volume setting.

To achieve 12.125 db of master volume, set the mixer to 0.125 db and set 0x07 (maser volume) to 12 db. The advantage is 0x73 and 0x77 can be set to a much finer setting using 3.23 format numbers, providing the flexibility to adjust output power precisely.

Table 11. Volume Registers (0x07, 0x08, 0x09, 0x0C)

D7	D6	D5	D4	D3	D2	D1	D0	FUNCTION
0	0	0	0	0	0	0	0	24 dB
0	**0**	**1**	**1**	**0**	**0**	**0**	**0**	**0 dB (default for individual channel volume)** (1)
1	1	1	1	1	1	1	0	–103 dB
1	1	1	1	1	1	1	1	Soft mute

(1) Default values are in **bold**.

Table 12. Master Volume Table

HEX	dB	HEX	dB	HEX	dB	HEX	dB	HEX	dB	HEX	dB
00	24	30	0	60	–24	90	–48	C0	–72	F0	–96
01	23.5	31	–0.5	61	–24.5	91	–48.5	C1	–72.5	F1	–96.5
02	23	32	–1	62	–25	92	–49	C2	–73	F2	–97
03	22.5	33	–1.5	63	–25.5	93	–49.5	C3	–73.5	F3	–97.5
04	22	34	–2	64	–26	94	–50	C4	–74	F4	–98
05	21.5	35	–2.5	65	–26.5	95	–50.5	C5	–74.5	F5	–98.5
06	21	36	–3	66	–27	96	–51	C6	–75	F6	–99
07	20.5	37	–3.5	67	–27.5	97	–51.5	C7	–75.5	F7	–99.5
08	20	38	–4	68	–28	98	–52	C8	–76	F8	–100
09	19.5	39	–4.5	69	–28.5	99	–52.5	C9	–76.5	F8	
0A	19	3A	–5	6A	–29	9A	–53	CA	–77	FA	
0B	18.5	3B	–5.5	6B	–29.5	9B	–53.5	CB	–77.5	FB	
0C	18	3C	–6	6C	–30	9C	–54	CC	–78	FC	
0D	17.5	3D	–6.5	6D	–30.5	9D	–54.5	CD	–78.5	FD	
0E	17	3E	–7	6E	–31	9E	–55	CE	–79	FE	
0F	16.5	3F	–7.5	6F	–31.5	9F	–55.5	CF	–79.5	FF	
10	16	40	–8	70	–32	A0	–56	D0	–80		

Copyright © 2010, Texas Instruments Incorporated

Table 12. Master Volume Table (continued)

HEX	dB	HEX	dB	HEX	dB	HEX	dB	HEX	dB	HEX	dB
11	15.5	41	–8.5	71	–32.5	A1	–56.5	D1	–80.5		
12	15	42	–9	72	–33	A2	–57	D2	–81		
13	14.5	43	–9.5	73	–33.5	A3	–57.5	D3	–81.5		
14	14	44	–10	74	–34	A4	–58	D4	–82		
15	13.5	45	–10.5	75	–34.5	A5	–58.5	D5	–82.5		
16	13	46	–11	76	–35	A6	–59	D6	–83		
17	12.5	37	–11.5	77	–35.5	A7	–59.5	D7	–83.5		
18	12	38	–12	78	–36	A8	–60	D8	–84		
19	11.5	39	–12.5	79	–36.5	A9	–60.5	D9	–84.5		
1A	11	4A	–13	7A	–37	AA	–61	DA	–85		
1B	10.5	4B	–13.5	7B	–37.5	AB	–61.5	DB	–85.5		
1C	10	4C	–14	7C	–38	AC	–62	DC	–86		
1D	9.5	4D	–14.5	7D	–38.5	AD	–62.5	DD	–86.5		
1E	9	4E	–15	7E	–39	AE	–63	DE	–87		
1F	8.5	4F	–15.5	7F	–39.5	AF	–63.5	DF	–87.5		
20	8	50	–16	80	–40	B0	–64	E0	–88		
21	7.5	51	–16.5	81	–40.5	B1	–64.5	E1	–88.5		
22	7	52	–17	82	–41	B2	–65	E2	–89		
23	6.5	53	–17.5	83	–41.5	B3	–65.5	E3	–89.5		
24	6	54	–18	84	–42	B4	–66	E4	–90		
25	5.5	55	–18.5	85	–42.5	B5	–66.5	E5	–90.5		
26	5	56	–19	86	–43	B6	–67	E6	–91		
27	4.5	547	–19.5	87	–43.5	B7	–67.5	E7	–91.5		
28	4	58	–20	88	–44	B8	–68	E8	–92		
29	3.5	59	–20.5	89	–44.5	B9	–68.5	E9	–92.5		
2A	3	5A	–21	8A	–45	BA	–69	EA	–93		
2B	2.5	5B	–21.5	8B	–45.5	BB	–69.5	EB	–93.5		
2C	2	5C	–22	8C	–46	BC	–70	EC	–94		
2D	1.5	5D	–22.5	8D	–46.5	BD	–70.5	ED	–94.5		
2E	1	5E	–23	8E	–47	BE	–71	EE	–95		
2F	0.5	5F	–23.5	8F	–47.5	BF	–71.5	EF	–95.5		

Copyright © 2010, Texas Instruments Incorporated

VOLUME CONFIGURATION REGISTER (0x0E)

Bits D2–D0: Volume slew rate (Used to control volume change and MUTE ramp rates). These bits control the number of steps in a volume ramp. Volume steps occur at a rate that depends on the sample rate of the I^2S data as follows:

Sample rate (KHz)	Approximate ramp rate
8/16/32	125 μs/step
11.025/22.05/44.1	90.7 μs/step
12/24/48	83.3 μs/step

Table 13. Volume Control Register (0x0E)

D7	D6	D5	D4	D3	D2	D1	D0	FUNCTION
1	**0**	**0**	**1**	**0**	–	–	–	**Reserved** (1)
–	–	–	–	–	**0**	**0**	**0**	**Volume slew 512 steps (43 ms volume ramp time at 48 kHz)**(1)
–	–	–	–	–	0	0	1	Volume slew 1024 steps (85 ms volume ramp time at 48 kHz)
–	–	–	–	–	0	1	0	Volume slew 2048 steps (171 ms volume ramp time at 48 kHz)
–	–	–	–	–	0	1	1	Volume slew 256 steps (21 ms volume ramp time at 48 kHz)
–	–	–	–	–	1	X	X	Reserved

(1) Default values are in **bold**.

DC DETECT CONTROL REGISTER (0x0F)

Table 14. DC Detect Control Register (0x0F)(1)

D7	D6	D5	D4	D3	D2	D1	D0	Magnitude	MAX +	MAX –
0	0	0	0	–	–	–	–	7	52.73%	47.27%
0	0	0	1	–	–	–	–	15	55.86%	44.14%
0	0	1	0	–	–	–	–	23	58.98%	41.02%
0	0	1	1	–	–	–	–	31	62.11%	37.89%
0	1	0	0	–	–	–	–	39	65.23%	34.77%
0	1	0	1	–	–	–	–	47	68.36%	31.64%
0	1	1	0	–	–	–	–	55	71.48%	28.52%
0	1	1	1	–	–	–	–	63	74.61%	25.39%
1	0	0	0	–	–	–	–	71	77.73%	22.27%
1	**0**	**0**	**1**	–	–	–	–	79	80.86%	19.14%
1	0	1	0	–	–	–	–	87	83.98%	16.02%
1	0	1	1	–	–	–	–	95	87.11%	12.89%
1	1	0	0	–	–	–	–	103	90.23%	9.77%
1	1	0	1	–	–	–	–	111	93.36%	6.64%
1	1	1	0	–	–	–	–	119	96.48%	3.52%
1	1	1	1	–	–	–	–	127	99.61%	0.39%
								Time, ms		
–	–	–	–	0	0	0	0	157.1		
–	–	–	–	0	0	0	1	314.2		
–	–	–	–	0	0	1	0	471.3		
–	–	–	–	0	0	1	1	628.4		
–	–	–	–	0	1	0	0	785.5		
–	–	–	–	0	1	0	1	942.6		
–	–	–	–	0	1	1	0	1099.7		

(1) See register 0x46, bit D10 for enable/disable control of this feature.

Copyright © 2010, Texas Instruments Incorporated

Table 14. DC Detect Control Register (0x0F)[1] (continued)

D7	D6	D5	D4	D3	D2	D1	D0	Magnitude	MAX +	MAX –
–	–	–	–	**0**	**1**	**1**	**1**	1256.8		
–	–	–	–	1	0	0	0	1413.9		
–	–	–	–	1	0	0	1	1571		
–	–	–	–	1	0	1	0	1728.1		
–	–	–	–	1	0	1	1	1885.2		
–	–	–	–	1	1	0	0	2042.3		
–	–	–	–	1	1	0	1	2199.4		
–	–	–	–	1	1	1	0	2356.5		
–	–	–	–	1	1	1	1	2513.6		

Copyright © 2010, Texas Instruments Incorporated

MODULATION LIMIT REGISTER (0x10)

Table 15. Modulation Limit Register (0x10)

D7	D6	D5	D4	D3	D2	D1	D0	MODULATION LIMIT
0	0	0	0	0	–	–	–	Reserved
–	–	–	–	–	0	0	0	99.2%
–	–	–	–	–	**0**	**0**	**1**	**98.4%** (1)
–	–	–	–	–	0	1	0	97.7%
–	–	–	–	–	0	1	1	96.9%
–	–	–	–	–	1	0	0	96.1%
–	–	–	–	–	1	0	1	95.3%
–	–	–	–	–	1	1	0	94.5%
–	–	–	–	–	1	1	1	93.8%

(1) Default values are in **bold**.

INTERCHANNEL DELAY REGISTERS (0x11, 0x12, 0x13, and 0x14)

Internal PWM Channels 1, 2, $\overline{1}$, and $\overline{2}$ are mapped into registers 0x11, 0x12, 0x13, and 0x14.

Table 16. Channel Interchannel Delay Register Format

BIT DEFINITION	D7	D6	D5	D4	D3	D2	D1	D0	FUNCTION
	0	0	0	0	0	0	–	–	Minimum absolute delay, 0 DCLK cycles
	0	1	1	1	1	1	–	–	Maximum positive delay, 31 × 4 DCLK cycles
	1	0	0	0	0	0	–	–	Maximum negative delay, –32 × 4 DCLK cycles
							0	0	Reserved
SUBADDRESS	**D7**	**D6**	**D5**	**D4**	**D3**	**D2**	**D1**	**D0**	**Delay = (value) × 4 DCLKs**
0x11	**1**	**0**	**1**	**0**	**1**	**1**	–	–	**Default value for channel 1** (1)
0x12	**0**	**1**	**0**	**1**	**0**	**1**	–	–	**Default value for channel 2** (1)
0x13	**1**	**0**	**1**	**0**	**1**	**1**	–	–	**Default value for $\overline{\text{channel 1}}$** (1)
0x14	**0**	**1**	**0**	**1**	**0**	**1**	–	–	**Default value for $\overline{\text{channel 2}}$** (1)

(1) Default values are in **bold**.

ICD settings have high impact on audio performance (e.g.: dynamic range, THD, crosstalk, etc.) Therefore, appropriate ICD settings must be used. By default, the device has ICD settings for AD mode. If used in BD mode, then update these registers before coming out of all-channel shutdown.

MODE	AD MODE	BD MODE
0x11	AC	B8
0x12	54	60
0x13	AC	A0
0x14	54	48

PWM SHUTDOWN GROUP REGISTER (0x19)

Settings of this register determine which PWM channels are active. The value should be 0x30 for BTL mode and 0x3A for PBTL mode. The default value of this register is 0x30. The functionality of this register is tied to the state of bit D5 in the system control register.

This register defines which channels belong to the shutdown group (SDG). If a 1 is set in the shutdown group register, that particular channel is **not** started following an exit *out of all-channel shutdown* command (if bit D5 is set to 0 in system control register 2, 0x05).

Table 17. Shutdown Group Register

D7	D6	D5	D4	D3	D2	D1	D0	FUNCTION
0	–	–	–	–	–	–	–	**Reserved** (1)
–	**0**	–	–	–	–	–	–	**Reserved** (1)
–	–	**1**	–	–	–	–	–	**Reserved** (1)
–	–	–	**1**	–	–	–	–	**Reserved** (1)
–	–	–	–	**0**	–	–	–	**PWM channel 4 does not belong to shutdown group.** (1)
–	–	–	–	1	–	–	–	PWM channel 4 belongs to shutdown group.
–	–	–	–	–	**0**	–	–	**PWM channel 3 does not belong to shutdown group.** (1)
–	–	–	–	–	1	–	–	PWM channel 3 belongs to shutdown group.
–	–	–	–	–	–	**0**	–	**PWM channel 2 does not belong to shutdown group.** (1)
–	–	–	–	–	–	1	–	PWM channel 2 belongs to shutdown group.
–	–	–	–	–	–	–	**0**	**PWM channel 1 does not belong to shutdown group.** (1)
–	–	–	–	–	–	–	1	PWM channel 1 belongs to shutdown group.

(1) Default values are in **bold**.

Copyright © 2010, Texas Instruments Incorporated

START/STOP PERIOD REGISTER (0x1A)

This register is used to control the soft-start and soft-stop period following an enter/exit all-channel shutdown command or change in the PDN state. This helps reduce pops and clicks at start-up and shutdown.The times are only approximate and vary depending on device activity level and I^2S clock stability.

Table 18. Start/Stop Period Register (0x1A)

D7	D6	D5	D4	D3	D2	D1	D0	FUNCTION
0	**1**	**0**	–	–	–	–	–	**PWM headphone start/stop time = 94.2 ms** (1)
–	–	–	0	0	X	X	X	No 50% duty cycle start/stop period
–	–	–	**0**	**1**	**0**	**0**	**0**	**16.5-ms 50% duty cycle start/stop period** (1)
–	–	–	0	1	0	0	1	23.9-ms 50% duty cycle start/stop period
–	–	–	0	1	0	1	0	31.4-ms 50% duty cycle start/stop period
–	–	–	0	1	0	1	1	40.4-ms 50% duty cycle start/stop period
–	–	–	0	1	1	0	0	53.9-ms 50% duty cycle start/stop period
–	–	–	0	1	1	0	1	70.3-ms 50% duty cycle start/stop period
–	–	–	0	1	1	1	0	94.2-ms 50% duty cycle start/stop period
–	–	–	0	1	1	1	1	125.7-ms 50% duty cycle start/stop period
–	–	–	1	0	0	0	0	164.6-ms 50% duty cycle start/stop period
–	–	–	1	0	0	0	1	239.4-ms 50% duty cycle start/stop period
–	–	–	1	0	0	1	0	314.2-ms 50% duty cycle start/stop period
–	–	–	1	0	0	1	1	403.9-ms 50% duty cycle start/stop period
–	–	–	1	0	1	0	0	538.6-ms 50% duty cycle start/stop period
–	–	–	1	0	1	0	1	703.1-ms 50% duty cycle start/stop period
–	–	–	1	0	1	1	0	942.5-ms 50% duty cycle start/stop period
–	–	–	1	0	1	1	1	1256.6-ms 50% duty cycle start/stop period
–	–	–	1	1	0	0	0	1728.1-ms 50% duty cycle start/stop period
–	–	–	1	1	0	0	1	2513.6-ms 50% duty cycle start/stop period
–	–	–	1	1	0	1	0	3299.1-ms 50% duty cycle start/stop period
–	–	–	1	1	0	1	1	4241.7-ms 50% duty cycle start/stop period
–	–	–	1	1	1	0	0	5655.6-ms 50% duty cycle start/stop period
–	–	–	1	1	1	0	1	7383.7-ms 50% duty cycle start/stop period
–	–	–	1	1	1	1	0	9897.3-ms 50% duty cycle start/stop period
–	–	–	1	1	1	1	1	13,196.4-ms 50% duty cycle start/stop period

(1) Default values are in **bold**.

Copyright © 2010, Texas Instruments Incorporated

OSCILLATOR TRIM REGISTER (0x1B)

The TAS5715 PWM processor contains an internal oscillator to support autodetect of I2S clock rates. This reduces system cost because an external reference is not required. Currently, TI recommends a reference resistor value of 18.2 kΩ (1%). This should be connected between OSC_RES and DVSSO.

Writing 0x00 to reg 0x1B enables the trim that was programmed at the factory.

Note that trim must always be run following reset of the device.

Table 19. Oscillator Trim Register (0x1B)

D7	D6	D5	D4	D3	D2	D1	D0	FUNCTION
1	–	–	–	–	–	–	–	**Reserved** (1)
–	**0**	–	–	–	–	–	–	**Oscillator trim not done (read-only)** (1)
–	1	–	–	–	–	–	–	Oscillator trim done (read-only)
–	–	**0**	**0**	**0**	**0**	–	–	**Reserved** (1)
–	–	–	–	–	–	0	–	Select factory trim (write a 0 to select factory trim; default is 1.)
–	–	–	–	–	–	**1**	–	**Factory trim disabled** (1)
–	–	–	–	–	–	–	**0**	**Reserved** (1)

(1) Default values are in **bold**.

BKND_ERR REGISTER (0x1C)

When a back-end error signal is received from the internal power stage, the power stage is reset stopping all PWM activity. Subsequently, the modulator waits approximately for the time listed in Table 20 before attempting to re-start the power stage.

Table 20. BKND_ERR Register (0x1C)(1)

D7	D6	D5	D4	D3	D2	D1	D0	FUNCTION
0	**0**	**1**	**1**	–	–	–	–	**Headphone start/stop time = 4 ms**(2)
–	–	–	–	0	0	1	0	Set back-end reset period to 299 ms
–	–	–	–	0	0	1	1	Set back-end reset period to 449 ms
–	–	–	–	0	1	0	0	Set back-end reset period to 598 ms
–	–	–	–	0	1	0	1	Set back-end reset period to 748 ms
–	–	–	–	0	1	1	0	Set back-end reset period to 898 ms
–	–	–	–	**0**	**1**	**1**	**1**	**Set back-end reset period to 1047 ms**(2)
–	–	–	–	1	0	0	0	Set back-end reset period to 1197 ms
–	–	–	–	1	0	0	1	Set back-end reset period to 1346 ms
–	–	–	–	1	0	1	X	Set back-end reset period to 1496 ms
–	–	–	–	1	1	X	X	Set back-end reset period to 1496 ms

(1) This register can be written only with a non-reserved value. Also, this register can be written once after a reset.
(2) Default values are in **bold**.

Copyright © 2010, Texas Instruments Incorporated

INPUT MULTIPLEXER REGISTER (0x20)

This register controls the modulation scheme (AD or BD mode) as well as the routing of I^2S audio to the internal channels.

Table 21. Input Multiplexer Register (0x20)

D31	D30	D29	D28	D27	D26	D25	D24	FUNCTION
0	**0**	**0**	**0**	**0**	**0**	**0**	**0**	**Reserved** (1)
D23	**D22**	**D21**	**D20**	**D19**	**D18**	**D17**	**D16**	**FUNCTION**
0	–	–	–	–	–	–	–	**Channel-1 AD mode**(1)
1	–	–	–	–	–	–	–	Channel-1 BD mode
–	**0**	**0**	**0**	–	–	–	–	**SDIN-L to channel 1** (1)
–	0	0	1	–	–	–	–	SDIN-R to channel 1
–	0	1	0	–	–	–	–	Reserved
–	0	1	1	–	–	–	–	Reserved
–	1	0	0	–	–	–	–	Reserved
–	1	0	1	–	–	–	–	Reserved
–	1	1	0	–	–	–	–	Ground (0) to channel 1
–	1	1	1	–	–	–	–	Reserved
–	–	–	–	**0**	–	–	–	**Channel 2 AD mode**
–	–	–	–	1	–	–	–	Channel 2 BD mode
–	–	–	–	–	0	0	0	SDIN-L to channel 2
–	–	–	–	–	**0**	**0**	**1**	**SDIN-R to channel 2** (1)
–	–	–	–	–	0	1	0	Reserved
–	–	–	–	–	0	1	1	Reserved
–	–	–	–	–	1	0	0	Reserved
–	–	–	–	–	1	0	1	Reserved
–	–	–	–	–	1	1	0	Ground (0) to channel 2
–	–	–	–	–	1	1	1	Reserved
D15	**D14**	**D13**	**D12**	**D11**	**D10**	**D9**	**D8**	**FUNCTION**
0	**1**	**1**	**1**	**0**	**1**	**1**	**1**	**Reserved** (1)
D7	**D6**	**D5**	**D4**	**D3**	**D2**	**D1**	**D0**	**FUNCTION**
0	**1**	**1**	**1**	**0**	**0**	**1**	**0**	**Reserved** (1)

(1) Default values are in **bold**.

RESERVED (0x21–0x24)

PWM OUTPUT MUX REGISTER (0x25)

This DAP output mux selects which internal PWM channel is output to the external pins. Any channel can be output to any external output pin.

Bits D21–D20: Selects which PWM channel is output to OUT_A

Bits D17–D16: Selects which PWM channel is output to OUT_B

Bits D13–D12: Selects which PWM channel is output to OUT_C

Bits D09–D08: Selects which PWM channel is output to OUT_D

Note that channels are encoded so that channel 1 = 0x00, channel 2 = 0x01, …, channel 4 = 0x03.

Table 22. PWM Output Mux Register (0x25)

D31	D30	D29	D28	D27	D26	D25	D24	FUNCTION
0	**0**	**0**	**0**	**0**	**0**	**0**	**1**	**Reserved (1)**
D23	**D22**	**D21**	**D20**	**D19**	**D18**	**D17**	**D16**	**FUNCTION**
0	**0**	–	–	–	–	–	–	**Reserved (1)**
–	**–**	**0**	**0**	–	–	–	–	**Multiplex channel 1 to OUT_A (1)**
–	–	0	1	–	–	–	–	Multiplex channel 2 to OUT_A
–	–	1	0	–	–	–	–	Multiplex $\overline{\text{channel 1}}$ to OUT_A
–	–	1	1	–	–	–	–	Multiplex $\overline{\text{channel 2}}$ to OUT_A
–	–	–	–	**0**	**0**	–	–	**Reserved (1)**
–	–	–	–	–	–	0	0	Multiplex channel 1 to OUT_B
–	–	–	–	–	–	0	1	Multiplex channel 2 to OUT_B
–	–	–	–	–	–	**1**	**0**	**Multiplex $\overline{\text{channel 1}}$ to OUT_B (1)**
–	–	–	–	–	–	1	1	Multiplex $\overline{\text{channel 2}}$ to OUT_B
D15	**D14**	**D13**	**D12**	**D11**	**D10**	**D9**	**D8**	**FUNCTION**
0	**0**	–	–	–	–	–	–	**Reserved (1)**
–	–	0	0	–	–	–	–	Multiplex channel 1 to OUT_C
–	–	**0**	**1**	–	–	–	–	**Multiplex channel 2 to OUT_C (1)**
–	–	1	0	–	–	–	–	Multiplex $\overline{\text{channel 1}}$ to OUT_C
–	–	1	1	–	–	–	–	Multiplex $\overline{\text{channel 2}}$ to OUT_C
–	–	–	–	**0**	**0**	–	–	**Reserved (1)**
–	–	–	–	–	–	0	0	Multiplex channel 1 to OUT_D
–	–	–	–	–	–	0	1	Multiplex channel 2 to OUT_D
–	–	–	–	–	–	1	0	Multiplex $\overline{\text{channel 1}}$ to OUT_D
–	–	–	–	–	–	**1**	**1**	**Multiplex channel 2 to OUT_D (1)**
D7	**D6**	**D5**	**D4**	**D3**	**D2**	**D1**	**D0**	**FUNCTION**
0	**1**	**0**	**0**	**0**	**1**	**0**	**1**	**Reserved (1)**

(1) Default values are in **bold**.

Copyright © 2010, Texas Instruments Incorporated

DRC AND DC DETECT CONTROL (0x46)

Table 23. DRC AND DC DETECT CONTROL

D31	D30	D29	D28	D27	D26	D25	D24	FUNCTION
0	**0**	**0**	**0**	**0**	**0**	**0**	**0**	**Reserved** (1)
D23	**D22**	**D21**	**D20**	**D19**	**D18**	**D17**	**D16**	**FUNCTION**
0	**0**	**0**	**0**	**0**	**0**	**0**	**0**	**Reserved** (1)
D15	**D14**	**D13**	**D12**	**D11**	**D10**	**D9**	**D8**	**FUNCTION**
0	**0**	**0**	**0**	**0**	**–**	**–**	**–**	**Reserved** (1)
–	**–**	**–**	**–**	**–**	**0**	**–**	**–**	**PWM DC detect disabled**
–	**–**	**–**	**–**	**–**	**1**	**–**	**–**	**PWM DC detect enabled**
–	**–**	**–**	**–**	**–**	**–**	**0**	**–**	**EQ CRC detect disabled**
–	**–**	**–**	**–**	**–**	**–**	**1**	**–**	**EQ CRC detect enabled**
–	**–**	**–**	**–**	**–**	**–**	**–**	**0**	**DRC CRC detect disabled**
–	**–**	**–**	**–**	**–**	**–**	**–**	**1**	**DRC CRC detect enabled**
D7	**D6**	**D5**	**D4**	**D3**	**D2**	**D1**	**D0**	**FUNCTION**
0	**0**	**–**	**–**	**0**	**0**	–	–	**Reserved** (1)
–	–	0	–	–	–	–	–	Disable (1-H) complementary low-pass filter generation
–	–	**1**	–	–	–	–	–	**Enable (1-H) complementary low-pass filter generation** (2)(3)
–	–	–	–	–	–	**0**	–	**DRC2 turned OFF** (2)
–	–	–	–	–	–	1	–	DRC2 turned ON
–	–	–	–	–	–	–	**0**	**DRC1 turned OFF** (2)
–	–	–	–	–	–	–	1	DRC1 turned ON

(1) Default values are in **bold**.
(2) Default values are in **bold**.
(3) If enabled, low-pass filter is generated by (1 – high-pass filter output).

BANK SWITCH AND EQ CONTROL (0x50)

Table 24. Bank Switching Command

D31	D30	D29	D28	D27	D26	D25	D24	FUNCTION
0	–	–	–	–	–	–	–	**32 kHz, does not use bank 3** (1)
1	–	–	–	–	–	–	–	32 kHz, uses bank 3
–	0	–	–	–	–	–	–	Reserved
–	–	0	–	–	–	–	–	Reserved
–	–	–	**0**	–	–	–	–	**44.1/48 kHz, does not use bank 3** (1)
–	–	–	1	–	–	–	–	44.1/48 kHz, uses bank 3
–	–	–	–	0	–	–	–	16 kHz, does not use bank 3
–	–	–	–	**1**	–	–	–	**16 kHz, uses bank 3** (1)
–	–	–	–	–	0	–	–	22.025/24 kHz, does not use bank 3
–	–	–	–	–	**1**	–	–	**22.025/24 kHz, uses bank 3** (1)
–	–	–	–	–	–	0	–	8 kHz, does not use bank 3
–	–	–	–	–	–	**1**	–	**8 kHz, uses bank 3** (1)
–	–	–	–	–	–	–	0	11.025 kHz/12, does not use bank 3
–	–	–	–	–	–	–	**1**	**11.025/12 kHz, uses bank 3** (1)
D23	**D22**	**D21**	**D20**	**D19**	**D18**	**D17**	**D16**	**FUNCTION**
0	–	–	–	–	–	–	–	**32 kHz, does not use bank 2** (1)
1	–	–	–	–	–	–	–	32 kHz, uses bank 2
–	**1**	–	–	–	–	–	–	**Reserved** (1)
–	–	**1**	–	–	–	–	–	**Reserved** (1)
–	–	–	0	–	–	–	–	44.1/48 kHz, does not use bank 2
–	–	–	**1**	–	–	–	–	**44.1/48 kHz, uses bank 2** (1)
–	–	–	–	**0**	–	–	–	**16 kHz, does not use bank 2** (1)
–	–	–	–	1	–	–	–	16 kHz, uses bank 2
–	–	–	–	–	**0**	–	–	**22.025/24 kHz, does not use bank 2** (1)
–	–	–	–	–	1	–	–	22.025/24 kHz, uses bank 2
–	–	–	–	–	–	**0**	–	**8 kHz, does not use bank 2** (1)
–	–	–	–	–	–	1	–	8 kHz, uses bank 2
–	–	–	–	–	–	–	**0**	**11.025/12 kHz, does not use bank 2** (1)
–	–	–	–	–	–	–	1	11.025/12 kHz, uses bank 2
D15	**D14**	**D13**	**D12**	**D11**	**D10**	**D9**	**D8**	**FUNCTION**
0	–	–	–	–	–	–	–	32 kHz, does not use bank 1
1	–	–	–	–	–	–	–	**32 kHz, uses bank 1** (1)
–	0	–	–	–	–	–	–	Reserved
–	–	0	–	–	–	–	–	Reserved
–	–	–	**0**	–	–	–	–	**44.1/48 kHz, does not use bank 1** (1)
–	–	–	1	–	–	–	–	44.1/48 kHz, uses bank 1
–	–	–	–	**0**	–	–	–	**16 kHz, does not use bank 1** (1)
–	–	–	–	1	–	–	–	16 kHz, uses bank 1
–	–	–	–	–	**0**	–	–	**22.025/24 kHz, does not use bank 1** (1)
–	–	–	–	–	1	–	–	22.025/24 kHz, uses bank 1
–	–	–	–	–	–	**0**	–	**8 kHz, does not use bank 1** (1)
–	–	–	–	–	–	1	–	8 kHz, uses bank 1
–	–	–	–	–	–	–	**0**	**11.025/12 kHz, does not use bank 1** (1)
–	–	–	–	–	–	–	1	11.025/12 kHz, uses bank 1

(1) Default values are in **bold**.

Copyright © 2010, Texas Instruments Incorporated

Table 24. Bank Switching Command (continued)

D7	D6	D5	D4	D3	D2	D1	D0	FUNCTION
0								**EQ ON**
1	–	–	–	–	–	–	–	EQ OFF (bypass BQ 0–7 of channels 1 and 2)
–	**0**	–	–	–	–	–	–	**Reserved** (2)
–	–	**0**	–	–	–	–	–	**Ignore bank-mapping in bits D31–D8.Use default mapping.** (2)
		1						Use bank-mapping in bits D31–D8.
–	–	–	**0**	–	–	–	–	**L and R can be written independently.** (2) (3)
–	–	–	1	–	–	–	–	L and R are ganged for EQ biquads; a write to the left-channel biquad is also written to the right-channel biquad. (0x29–0x2F is ganged to 0x30–0x36. Also, 0x58–0x5B is ganged to 0x5C–0x5F.
–	–	**–**	**–**	**0**	–	–	–	Enable DRC time constant filter banking
–	–	**–**	**–**	1	–	–	–	Disable DRC time constantfilter banking
–	–	–	–	–	**0**	**0**	**0**	**No bank switching. All updates to DAP** (2)
–	–	–	–	–	0	0	1	Configure bank 1 (32 kHz by default)
–	–	–	–	–	0	1	0	Configure bank 2 (44.1/48 kHz by default)
–	–	–	–	–	0	1	1	Configure bank 3 (other sample rates by default)
–	–	–	–	–	1	0	0	Automatic bank selection
–	–	–	–	–	1	0	1	Reserved
–	–	–	–	–	1	1	X	Reserved

(2) Default values are in **bold**.
(3) Biquad ganging reduces the number of I^2C transactions. This is very useful if the left and right PEQ biquads have the same coefficients. If ganging is ON (D4 = 1), then any write to left biquad is automatically copied to the corresponding right biquad.

PACKAGING INFORMATION

Orderable part number	Status (1)	Material type (2)	Package | Pins	Package qty | Carrier	RoHS (3)	Lead finish/ Ball material (4)	MSL rating/ Peak reflow (5)	Op temp (°C)	Part marking (6)
TAS5715PHP	Active	Production	HTQFP (PHP) | 48	250 | JEDEC TRAY (5+1)	Yes	NIPDAU	Level-3-260C-168 HR	0 to 85	TAS5715
TAS5715PHP.A	Active	Production	HTQFP (PHP) | 48	250 | JEDEC TRAY (5+1)	Yes	NIPDAU	Level-3-260C-168 HR	0 to 85	TAS5715
TAS5715PHP.B	Active	Production	HTQFP (PHP) | 48	250 | JEDEC TRAY (5+1)	Yes	NIPDAU	Level-3-260C-168 HR	0 to 85	TAS5715
TAS5715PHPR	Active	Production	HTQFP (PHP) | 48	1000 | LARGE T&R	Yes	NIPDAU	Level-3-260C-168 HR	0 to 85	TAS5715
TAS5715PHPR.A	Active	Production	HTQFP (PHP) | 48	1000 | LARGE T&R	Yes	NIPDAU	Level-3-260C-168 HR	0 to 85	TAS5715
TAS5715PHPR.B	Active	Production	HTQFP (PHP) | 48	1000 | LARGE T&R	Yes	NIPDAU	Level-3-260C-168 HR	0 to 85	TAS5715

(1) **Status:** For more details on status, see our product life cycle.

(2) **Material type:** When designated, preproduction parts are prototypes/experimental devices, and are not yet approved or released for full production. Testing and final process, including without limitation quality assurance, reliability performance testing, and/or process qualification, may not yet be complete, and this item is subject to further changes or possible discontinuation. If available for ordering, purchases will be subject to an additional waiver at checkout, and are intended for early internal evaluation purposes only. These items are sold without warranties of any kind.

(3) **RoHS values:** Yes, No, RoHS Exempt. See the TI RoHS Statement for additional information and value definition.

(4) **Lead finish/Ball material:** Parts may have multiple material finish options. Finish options are separated by a vertical ruled line. Lead finish/Ball material values may wrap to two lines if the finish value exceeds the maximum column width.

(5) **MSL rating/Peak reflow:** The moisture sensitivity level ratings and peak solder (reflow) temperatures. In the event that a part has multiple moisture sensitivity ratings, only the lowest level per JEDEC standards is shown. Refer to the shipping label for the actual reflow temperature that will be used to mount the part to the printed circuit board.

(6) **Part marking:** There may be an additional marking, which relates to the logo, the lot trace code information, or the environmental category of the part.

Multiple part markings will be inside parentheses. Only one part marking contained in parentheses and separated by a "~" will appear on a part. If a line is indented then it is a continuation of the previous line and the two combined represent the entire part marking for that device.

Important Information and Disclaimer: The information provided on this page represents TI's knowledge and belief as of the date that it is provided. TI bases its knowledge and belief on information provided by third parties, and makes no representation or warranty as to the accuracy of such information. Efforts are underway to better integrate information from third parties. TI has taken and continues to take reasonable steps to provide representative and accurate information but may not have conducted destructive testing or chemical analysis on incoming materials and chemicals. TI and TI suppliers consider certain information to be proprietary, and thus CAS numbers and other limited information may not be available for release.

In no event shall TI's liability arising out of such information exceed the total purchase price of the TI part(s) at issue in this document sold by TI to Customer on an annual basis.

TAPE AND REEL INFORMATION

REEL DIMENSIONS

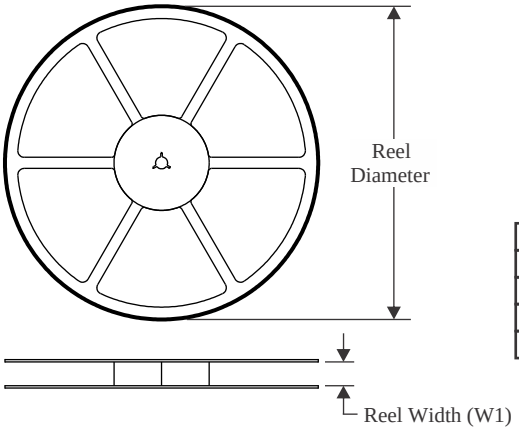

TAPE DIMENSIONS

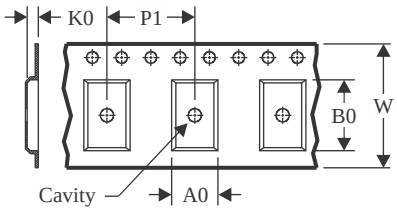

A0	Dimension designed to accommodate the component width
B0	Dimension designed to accommodate the component length
K0	Dimension designed to accommodate the component thickness
W	Overall width of the carrier tape
P1	Pitch between successive cavity centers

QUADRANT ASSIGNMENTS FOR PIN 1 ORIENTATION IN TAPE

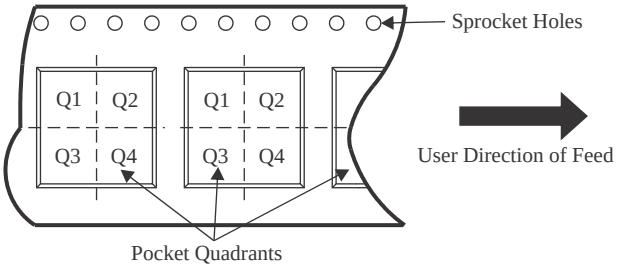

*All dimensions are nominal

Device	Package Type	Package Drawing	Pins	SPQ	Reel Diameter (mm)	Reel Width W1 (mm)	A0 (mm)	B0 (mm)	K0 (mm)	P1 (mm)	W (mm)	Pin1 Quadrant
TAS5715PHPR	HTQFP	PHP	48	1000	330.0	16.4	9.6	9.6	1.5	12.0	16.0	Q2

TAPE AND REEL BOX DIMENSIONS

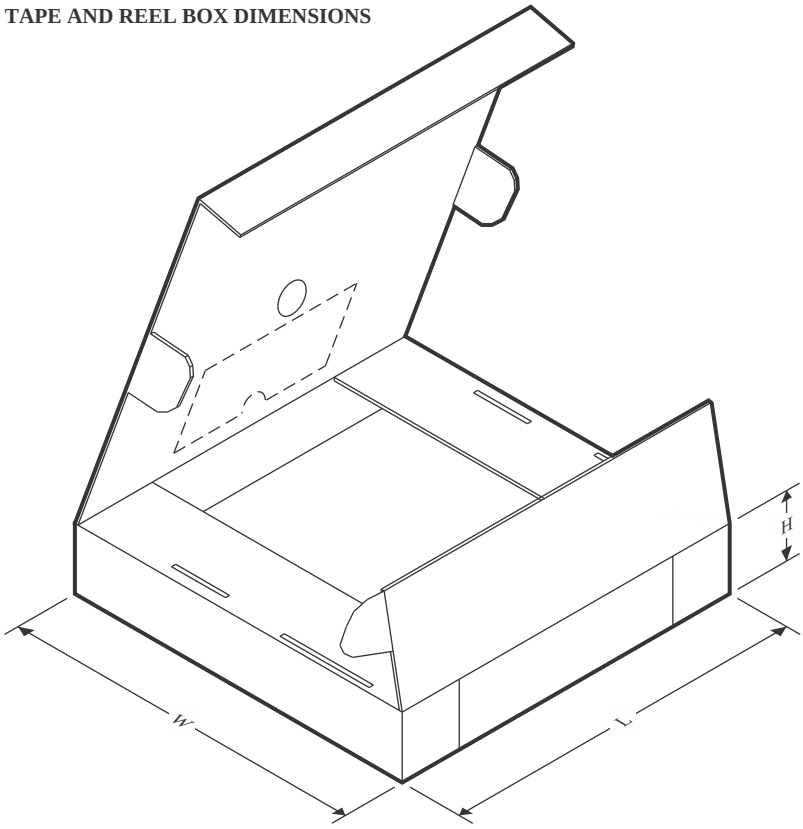

*All dimensions are nominal

Device	Package Type	Package Drawing	Pins	SPQ	Length (mm)	Width (mm)	Height (mm)
TAS5715PHPR	HTQFP	PHP	48	1000	336.6	336.6	31.8

TRAY

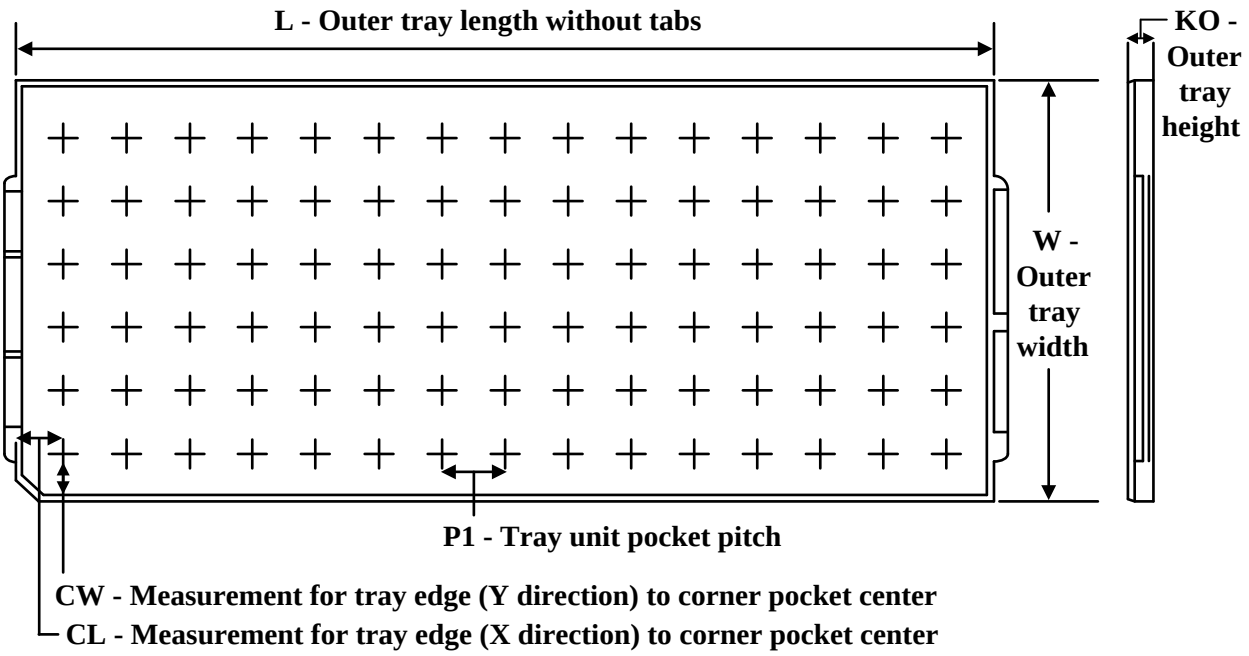

Chamfer on Tray corner indicates Pin 1 orientation of packed units.

*All dimensions are nominal

Device	Package Name	Package Type	Pins	SPQ	Unit array matrix	Max temperature (°C)	L (mm)	W (mm)	K0 (µm)	P1 (mm)	CL (mm)	CW (mm)
TAS5715PHP	PHP	HTQFP	48	250	10 x 25	150	315	135.9	7620	12.2	11.1	11.25
TAS5715PHP	PHP	HTQFP	48	250	10 x 25	150	315	135.9	7620	12.2	11.1	11.25
TAS5715PHP.A	PHP	HTQFP	48	250	10 x 25	150	315	135.9	7620	12.2	11.1	11.25
TAS5715PHP.A	PHP	HTQFP	48	250	10 x 25	150	315	135.9	7620	12.2	11.1	11.25
TAS5715PHP.B	PHP	HTQFP	48	250	10 x 25	150	315	135.9	7620	12.2	11.1	11.25
TAS5715PHP.B	PHP	HTQFP	48	250	10 x 25	150	315	135.9	7620	12.2	11.1	11.25

GENERIC PACKAGE VIEW

PHP 48

TQFP - 1.2 mm max height

7 x 7, 0.5 mm pitch

QUAD FLATPACK

This image is a representation of the package family, actual package may vary.
Refer to the product data sheet for package details.

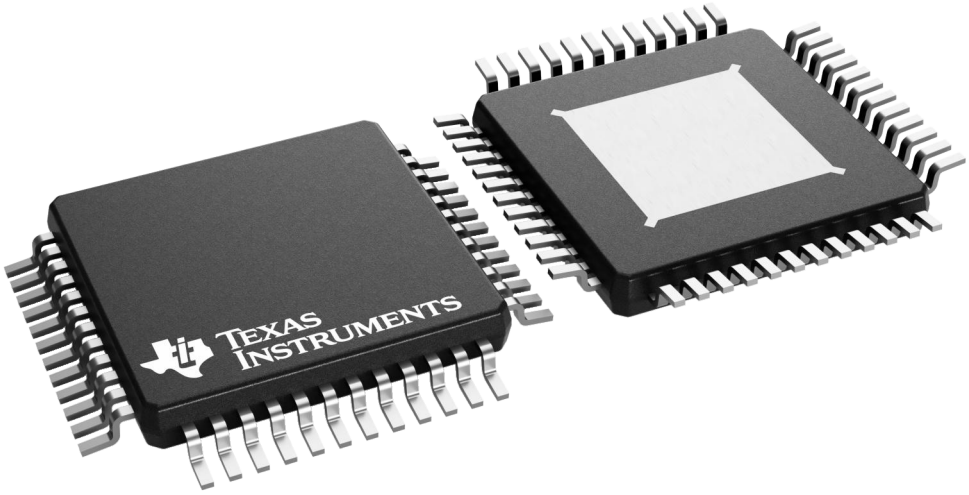

4226443/A

PHP (S–PQFP–G48) PowerPAD™ PLASTIC QUAD FLATPACK

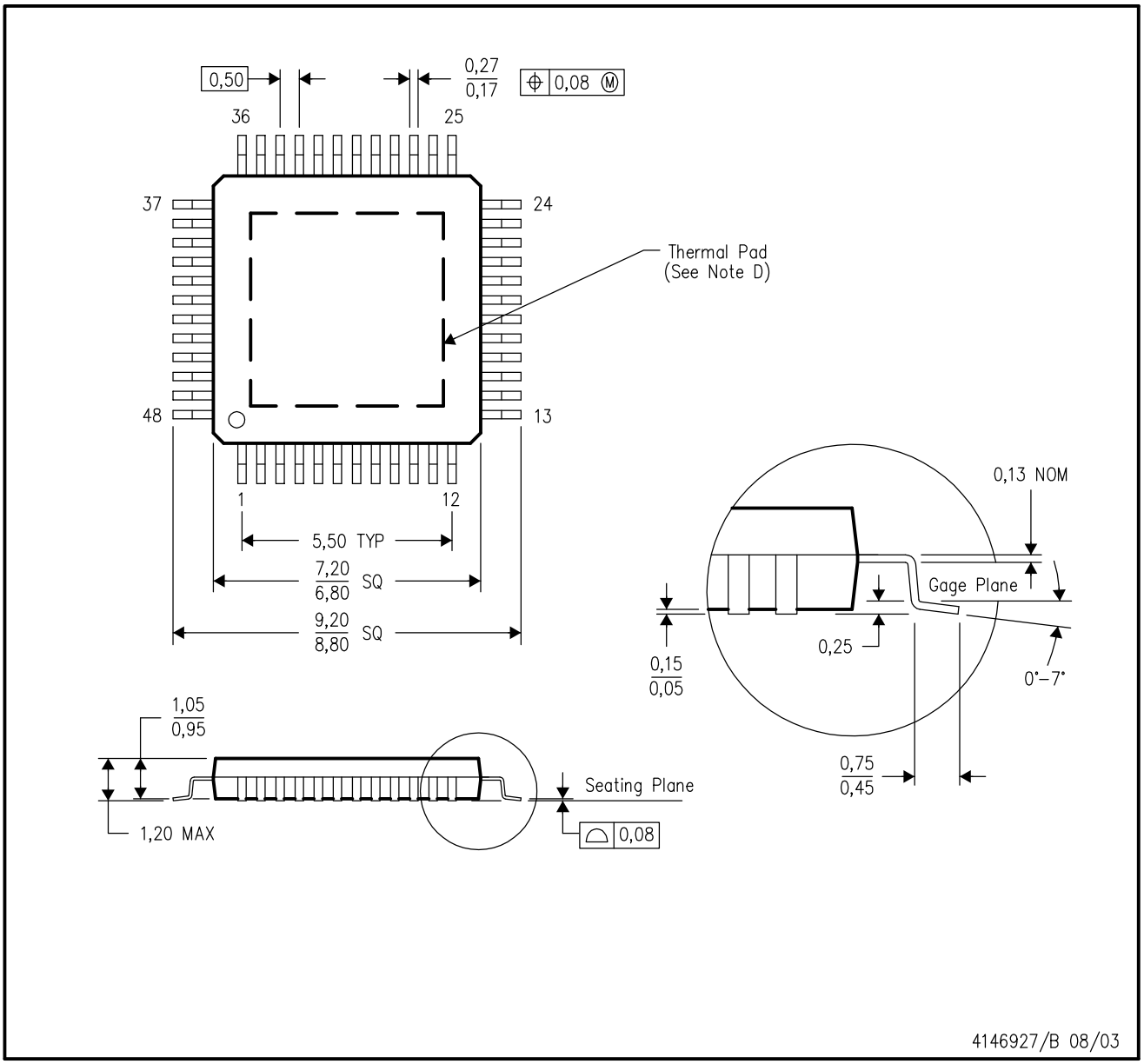

NOTES:
- A. All linear dimensions are in millimeters.
- B. This drawing is subject to change without notice.
- C. Body dimensions do not include mold flash or protrusion
- D. This package is designed to be soldered to a thermal pad on the board. Refer to Technical Brief, PowerPad Thermally Enhanced Package, Texas Instruments Literature No. SLMA002 for information regarding recommended board layout. This document is available at www.ti.com <http://www.ti.com>.
- E. Falls within JEDEC MS–026

PowerPAD is a trademark of Texas Instruments.

PHP (S–PQFP–G48) PowerPAD™ PLASTIC QUAD FLATPACK

THERMAL INFORMATION

This PowerPAD™ package incorporates an exposed thermal pad that is designed to be attached to a printed circuit board (PCB). The thermal pad must be soldered directly to the PCB. After soldering, the PCB can be used as a heatsink. In addition, through the use of thermal vias, the thermal pad can be attached directly to the appropriate copper plane shown in the electrical schematic for the device, or alternatively, can be attached to a special heatsink structure designed into the PCB. This design optimizes the heat transfer from the integrated circuit (IC).

For additional information on the PowerPAD package and how to take advantage of its heat dissipating abilities, refer to Technical Brief, PowerPAD Thermally Enhanced Package, Texas Instruments Literature No. SLMA002 and Application Brief, PowerPAD Made Easy, Texas Instruments Literature No. SLMA004. Both documents are available at www.ti.com.

The exposed thermal pad dimensions for this package are shown in the following illustration.

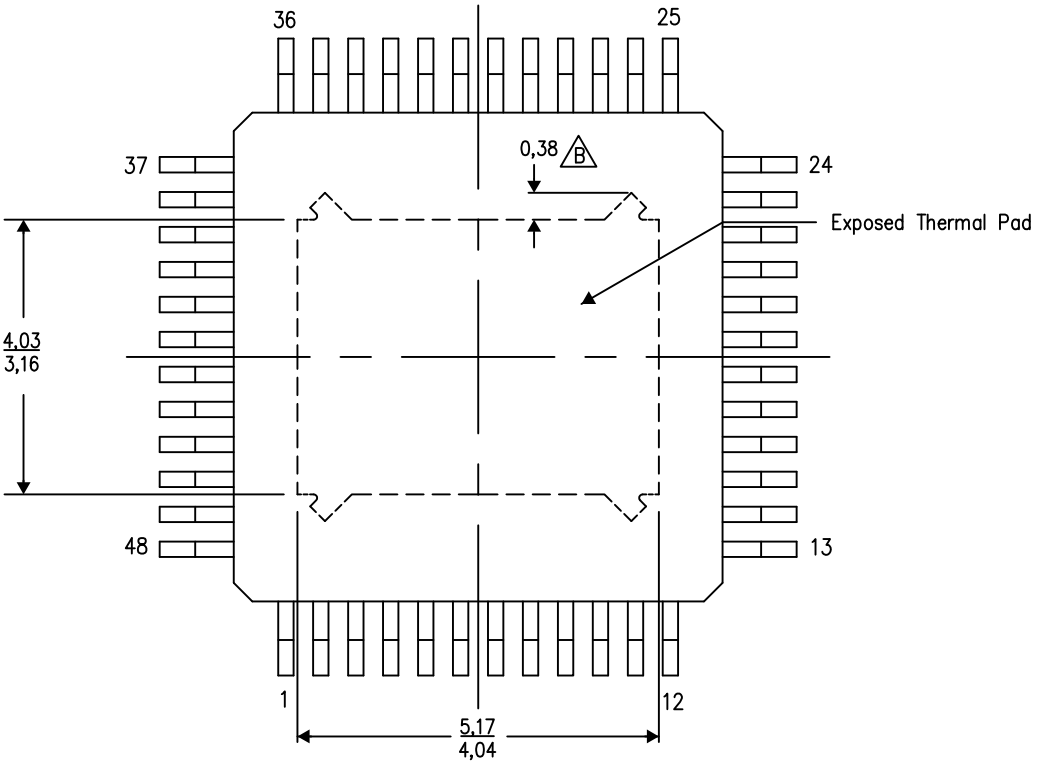

Top View

Exposed Thermal Pad Dimensions

4206329–18/P 03/15

NOTE: A. All linear dimensions are in millimeters

B. Tie strap features may not be present.

PowerPAD is a trademark of Texas Instruments

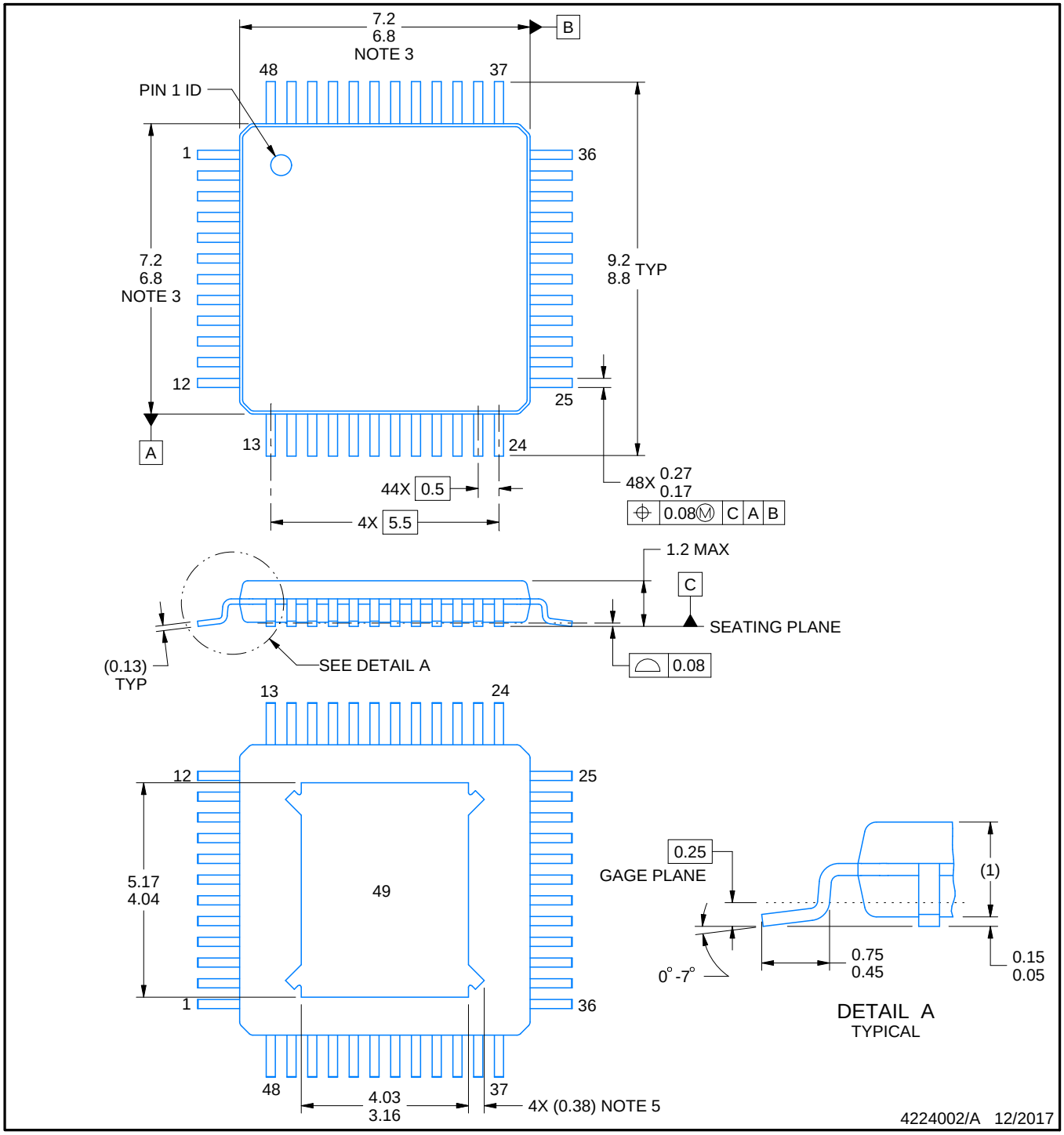

PowerPAD is a trademark of Texas Instruments.

NOTES:

1. All linear dimensions are in millimeters. Any dimensions in parenthesis are for reference only. Dimensioning and tolerancing per ASME Y14.5M.
2. This drawing is subject to change without notice.
3. This dimension does not include mold flash, protrusions, or gate burrs. Mold flash, protrusions, or gate burrs shall not exceed 0.15 mm per side.
4. Reference JEDEC registration MS-026.
5. Feature may not be present.

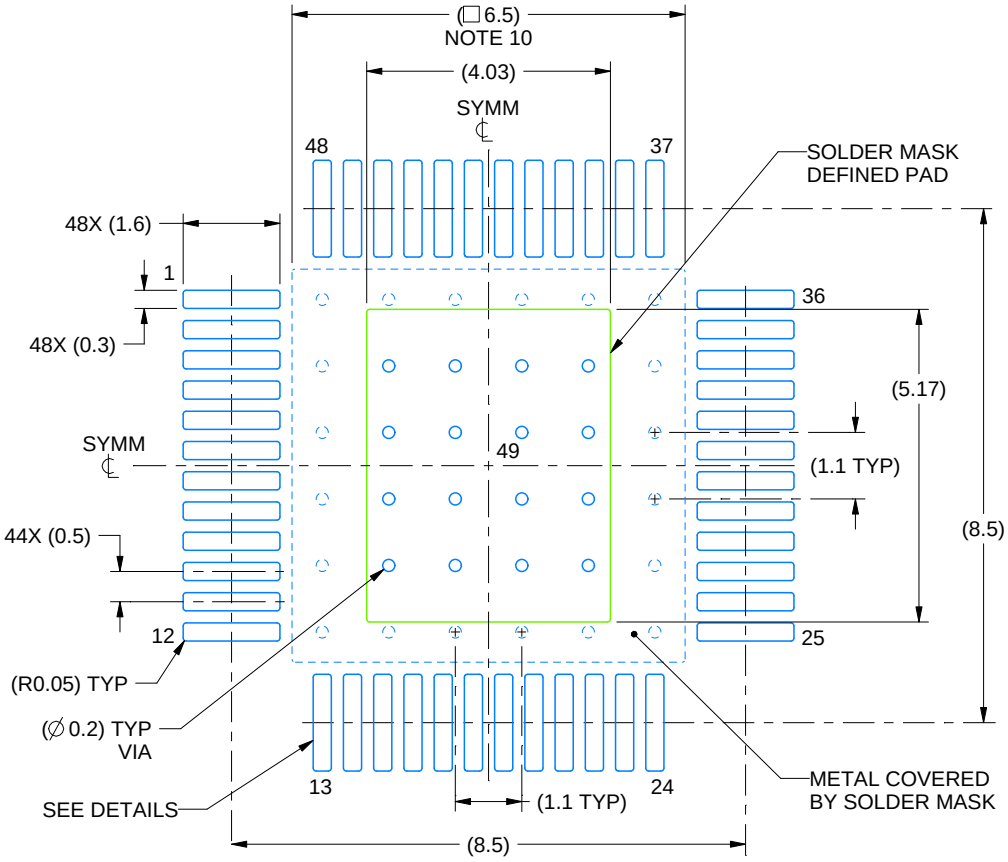

LAND PATTERN EXAMPLE
EXPOSED METAL SHOWN
SCALE:8X

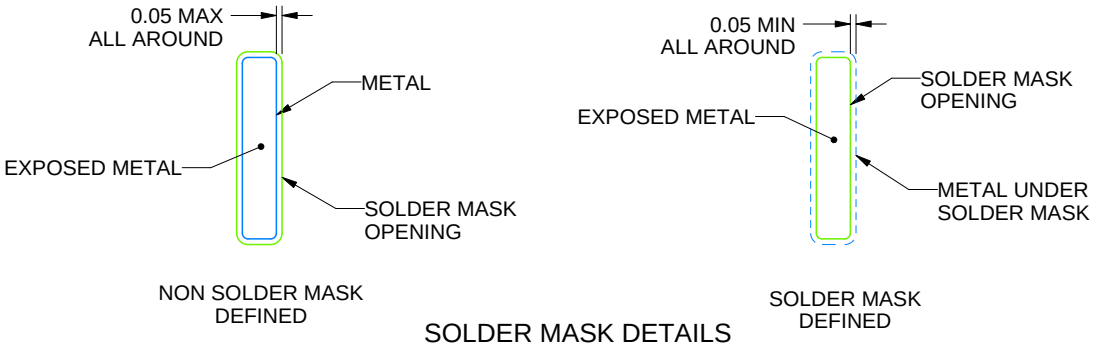

SOLDER MASK DETAILS

4224002/A 12/2017

NOTES: (continued)

6. Publication IPC-7351 may have alternate designs.
7. Solder mask tolerances between and around signal pads can vary based on board fabrication site.
8. This package is designed to be soldered to a thermal pad on the board. See technical brief, Powerpad thermally enhanced package, Texas Instruments Literature No. SLMA002 (www.ti.com/lit/slma002) and SLMA004 (www.ti.com/lit/slma004).
9. Vias are optional depending on application, refer to device data sheet. It is recommended that vias under paste be filled, plugged or tented.
10. Size of metal pad may vary due to creepage requirement.

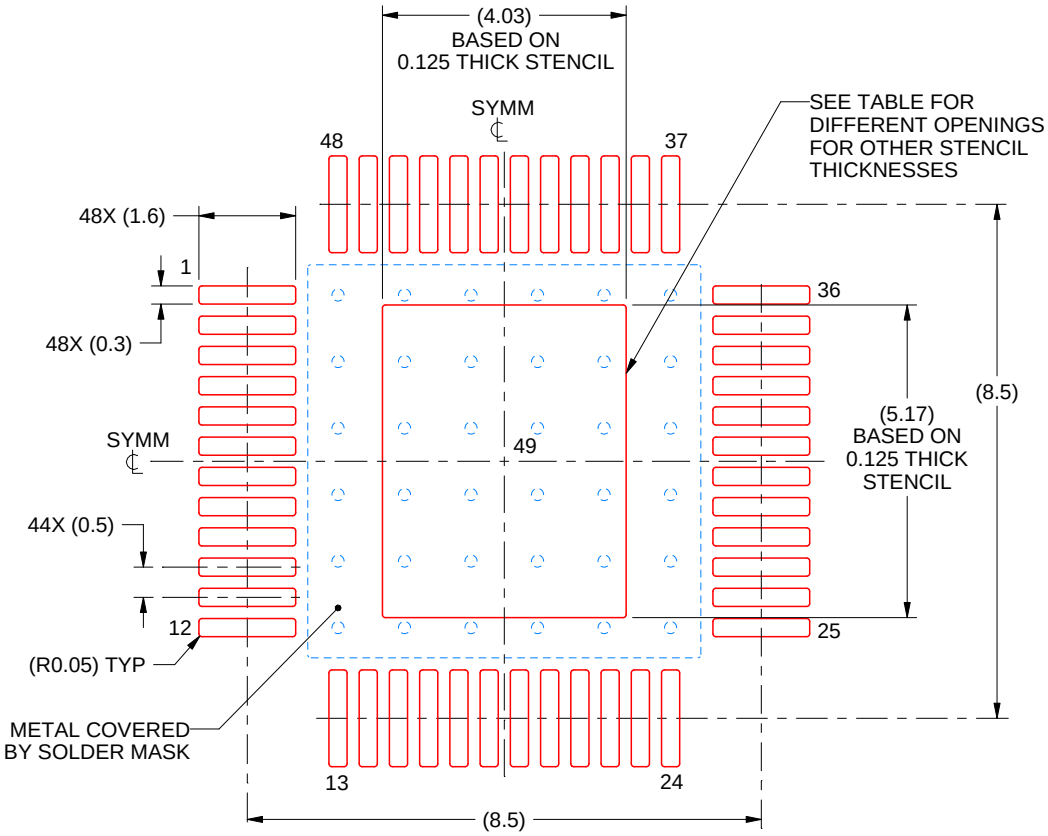

SOLDER PASTE EXAMPLE
EXPOSED PAD
100% PRINTED SOLDER COVERAGE BY AREA
SCALE:8X

STENCIL THICKNESS	SOLDER STENCIL OPENING
0.1	4.51 X 5.78
0.125	4.03 X 5.17 (SHOWN)
0.150	3.68 X 4.72
0.175	3.41 X 4.37

4224002/A 12/2017

NOTES: (continued)

11. Laser cutting apertures with trapezoidal walls and rounded corners may offer better paste release. IPC-7525 may have alternate design recommendations.
12. Board assembly site may have different recommendations for stencil design.

PHP (S–PQFP–G48) PowerPAD™ PLASTIC QUAD FLATPACK

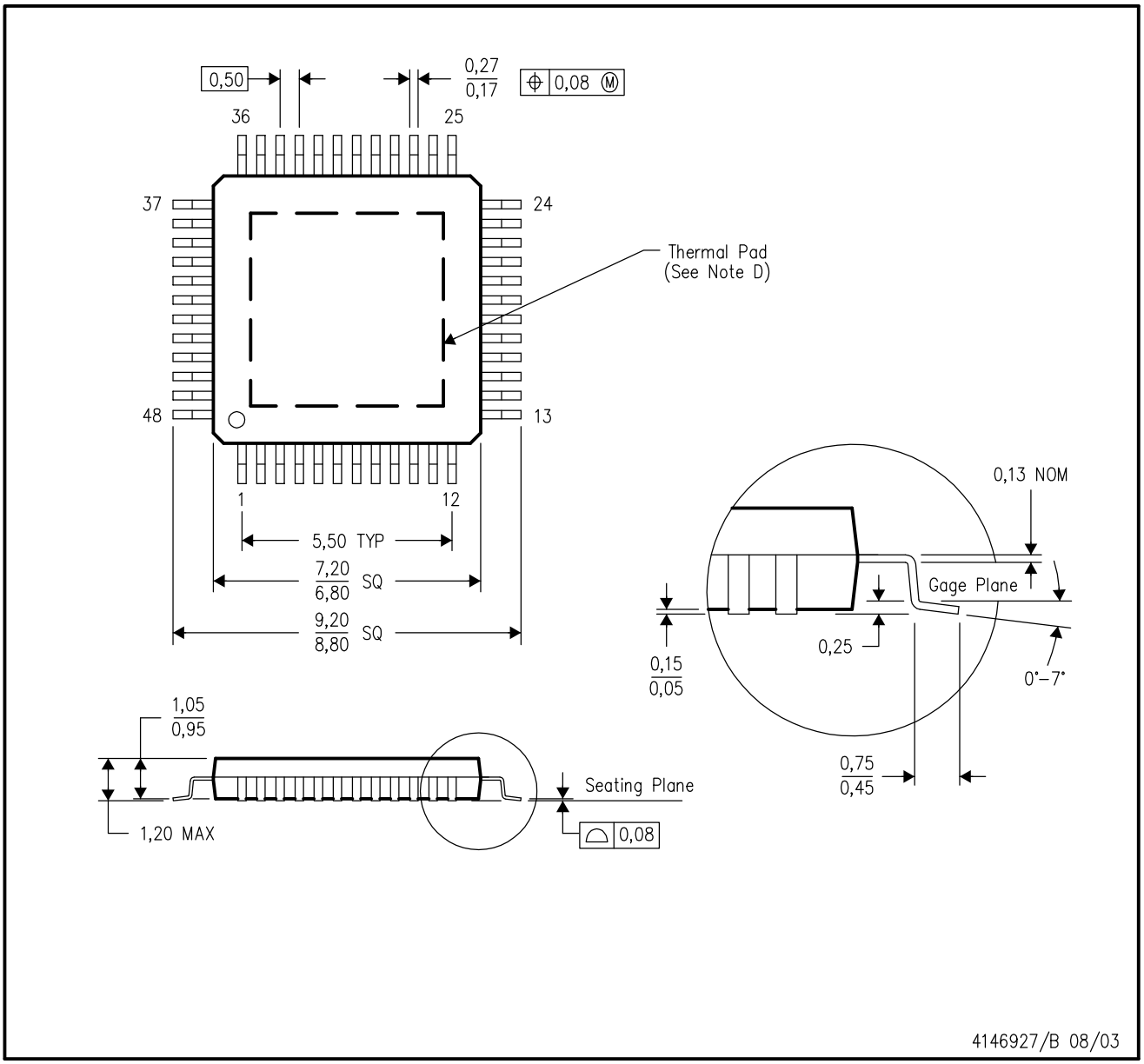

NOTES:
- A. All linear dimensions are in millimeters.
- B. This drawing is subject to change without notice.
- C. Body dimensions do not include mold flash or protrusion
- D. This package is designed to be soldered to a thermal pad on the board. Refer to Technical Brief, PowerPad Thermally Enhanced Package, Texas Instruments Literature No. SLMA002 for information regarding recommended board layout. This document is available at www.ti.com <http://www.ti.com>.
- E. Falls within JEDEC MS–026

PowerPAD is a trademark of Texas Instruments.

PHP (S–PQFP–G48) PowerPAD™ PLASTIC QUAD FLATPACK

THERMAL INFORMATION

This PowerPAD™ package incorporates an exposed thermal pad that is designed to be attached to a printed circuit board (PCB). The thermal pad must be soldered directly to the PCB. After soldering, the PCB can be used as a heatsink. In addition, through the use of thermal vias, the thermal pad can be attached directly to the appropriate copper plane shown in the electrical schematic for the device, or alternatively, can be attached to a special heatsink structure designed into the PCB. This design optimizes the heat transfer from the integrated circuit (IC).

For additional information on the PowerPAD package and how to take advantage of its heat dissipating abilities, refer to Technical Brief, PowerPAD Thermally Enhanced Package, Texas Instruments Literature No. SLMA002 and Application Brief, PowerPAD Made Easy, Texas Instruments Literature No. SLMA004. Both documents are available at www.ti.com.

The exposed thermal pad dimensions for this package are shown in the following illustration.

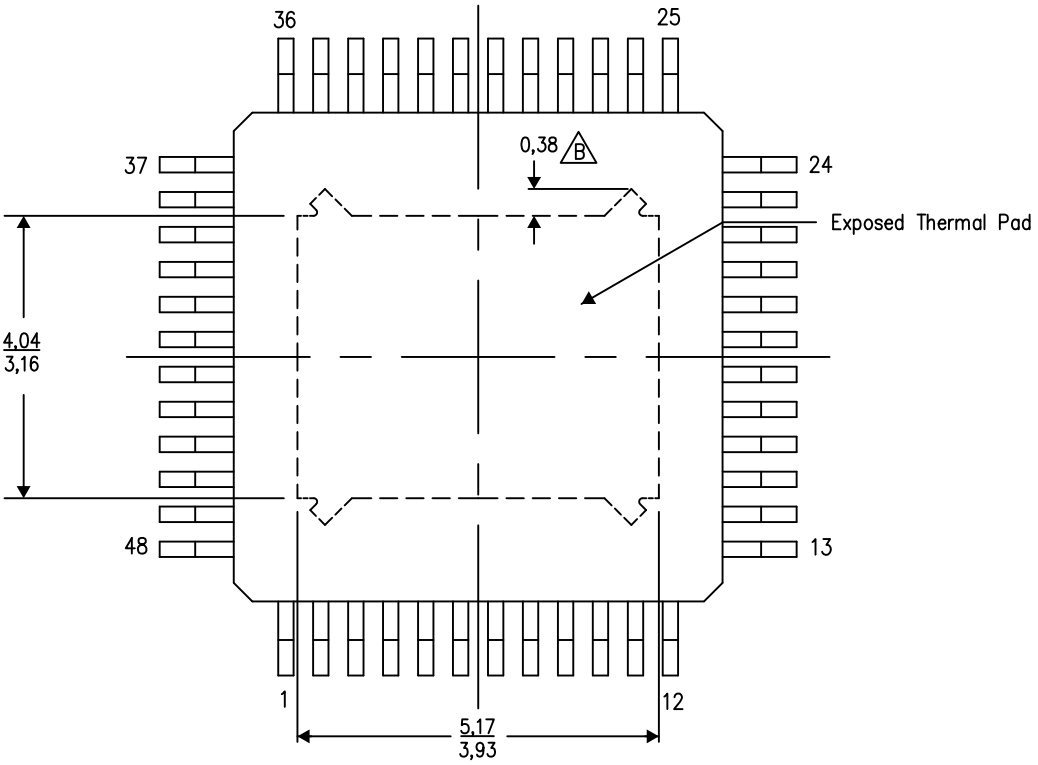

Top View

Exposed Thermal Pad Dimensions

4206329–9/P 03/15

NOTE: A. All linear dimensions are in millimeters

B. Tie strap features may not be present.

PowerPAD is a trademark of Texas Instruments

PHP (S–PQFP–G48) PowerPAD™ PLASTIC QUAD FLATPACK

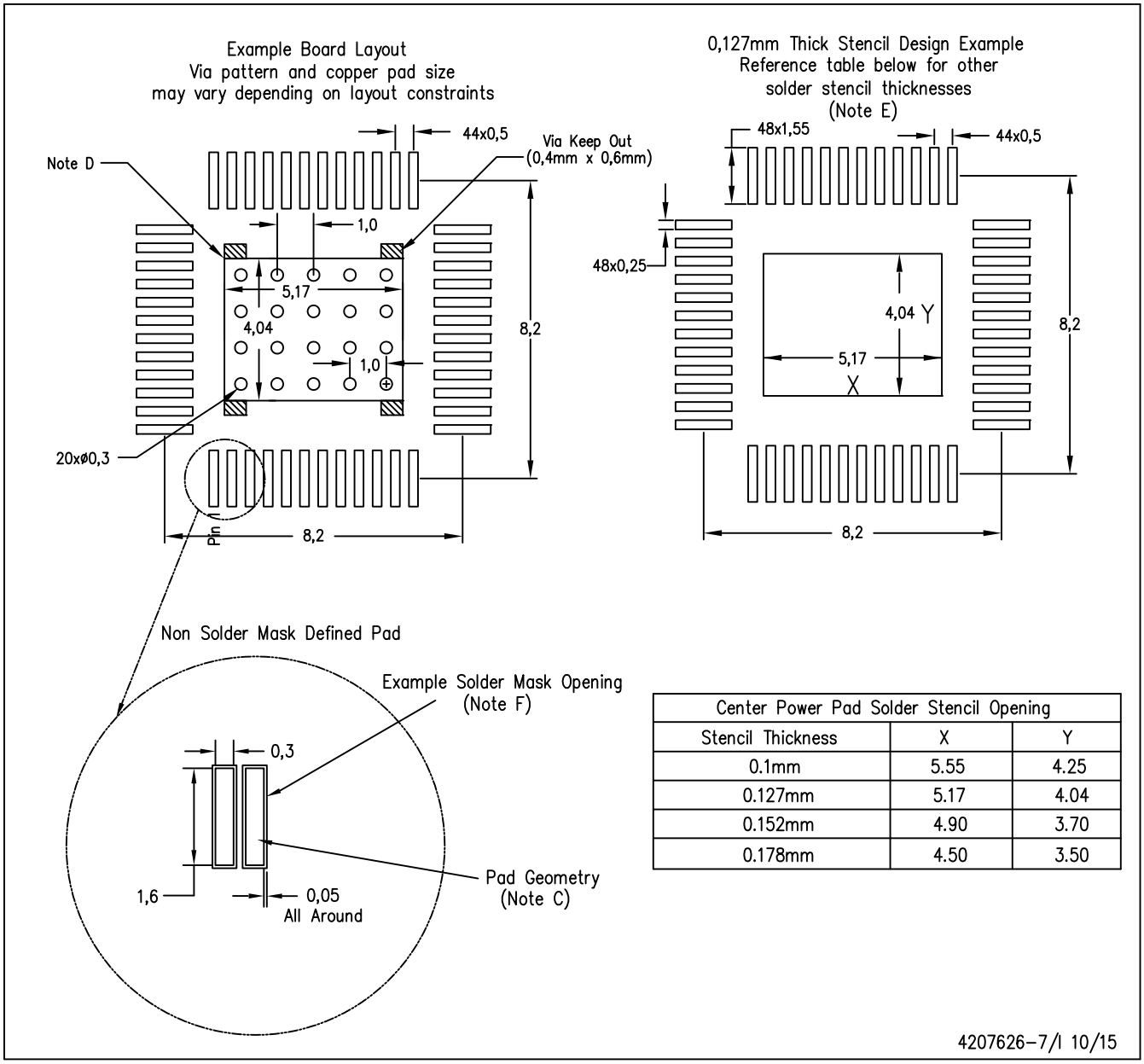

Center Power Pad Solder Stencil Opening		
Stencil Thickness	X	Y
0.1mm	5.55	4.25
0.127mm	5.17	4.04
0.152mm	4.90	3.70
0.178mm	4.50	3.50

NOTES:
- A. All linear dimensions are in millimeters.
- B. This drawing is subject to change without notice.
- C. Publication IPC–7351 is recommended for alternate designs.
- D. This package is designed to be soldered to a thermal pad on the board. Refer to Technical Brief, PowerPad Thermally Enhanced Package, Texas Instruments Literature No. SLMA002, SLMA004, and also the Product Data Sheets for specific thermal information, via requirements, and recommended board layout. These documents are available at www.ti.com <http://www.ti.com>.
- E. Laser cutting apertures with trapezoidal walls and also rounding corners will offer better paste release. Customers should contact their board assembly site for stencil design recommendations. Refer to IPC 7525 for stencil design considerations.
- F. Customers should contact their board fabrication site for recommended solder mask tolerances and via tenting options for vias placed in the thermal pad.

PowerPAD is a trademark of Texas Instruments

IMPORTANT NOTICE AND DISCLAIMER

TI PROVIDES TECHNICAL AND RELIABILITY DATA (INCLUDING DATA SHEETS), DESIGN RESOURCES (INCLUDING REFERENCE DESIGNS), APPLICATION OR OTHER DESIGN ADVICE, WEB TOOLS, SAFETY INFORMATION, AND OTHER RESOURCES “AS IS” AND WITH ALL FAULTS, AND DISCLAIMS ALL WARRANTIES, EXPRESS AND IMPLIED, INCLUDING WITHOUT LIMITATION ANY IMPLIED WARRANTIES OF MERCHANTABILITY, FITNESS FOR A PARTICULAR PURPOSE OR NON-INFRINGEMENT OF THIRD PARTY INTELLECTUAL PROPERTY RIGHTS.

These resources are intended for skilled developers designing with TI products. You are solely responsible for (1) selecting the appropriate TI products for your application, (2) designing, validating and testing your application, and (3) ensuring your application meets applicable standards, and any other safety, security, regulatory or other requirements.

These resources are subject to change without notice. TI grants you permission to use these resources only for development of an application that uses the TI products described in the resource. Other reproduction and display of these resources is prohibited. No license is granted to any other TI intellectual property right or to any third party intellectual property right. TI disclaims responsibility for, and you will fully indemnify TI and its representatives against, any claims, damages, costs, losses, and liabilities arising out of your use of these resources.

TI’s products are provided subject to TI’s Terms of Sale or other applicable terms available either on ti.com or provided in conjunction with such TI products. TI’s provision of these resources does not expand or otherwise alter TI’s applicable warranties or warranty disclaimers for TI products.

TI objects to and rejects any additional or different terms you may have proposed.

Mailing Address: Texas Instruments, Post Office Box 655303, Dallas, Texas 75265
Copyright © 2025, Texas Instruments Incorporated