LMH1297 12G UHD-SDI Bidirectional I/O With Integrated Reclocker

1 Features

- User-configurable adaptive cable equalizer or cable driver with integrated reclocker
- Supports ST-2082-1 (12G), ST-2081-1 (6G), ST-424 (3G), ST-292 (HD), and ST-259 (SD)
- Compatible with DVB-ASI and AES10 (MADI)
- Integrated reclocker locks to SMPTE rates of 11.88 Gbps, 5.94 Gbps, 2.97 Gbps, 1.485 Gbps, or divide-by-1.001 sub-rates and 270 Mbps
- On-chip 75-Ω termination and return loss compensation network
- EQ (equalizer) mode:
  - Adaptive cable equalizer with integrated reclocker
  - 100-Ω output driver with de-emphasis
  - Reclocked 75-Ω loop-through output
  - EQ mode cable reach (Belden 1694A, SDI_OUT disabled):
    - 75 m at 11.88 Gbps
    - 120 m at 5.94 Gbps
    - 200 m at 2.97 Gbps
    - 300 m at 1.485 Gbps
    - 600 m at 270 Mbps
- Cable driver (CD) mode:
  - Dual differential output cable drivers with integrated reclocker
  - Adaptive PCB input equalizer
  - Reclocked 100-Ω loopback output
- Automatic pre-emphasis and slew rate control on 75-Ω outputs
- Polarity inversion on 75-Ω and 100-Ω outputs
- Automatic power save in absence of input signal
  - Power dissipation: 25 mW (typical)
- Power-down control through ENABLE pin
- Single 2.5-V supply
  - EQ mode power dissipation: 275 mW (typical)
  - CD mode power dissipation: 305 mW (typical)
- Programmable through pins, SPI, or SMBus interface
- –40°C to +85°C operating temperature range
- 5-mm × 5-mm, 32-Pin QFN package

2 Applications

- SMPTE compatible serial digital interface
- UHDTV/4K/8K/HDTV/SDTV video
- IP media gateway
- Digital video processing and editing

3 Description

The LMH1297 is a 12G UHD-SDI 75-Ω bidirectional I/O with integrated reclocker. This device can be configured either in input mode as an adaptive cable equalizer or in output mode as a dual cable driver, allowing system designers the flexibility to use a single BNC either as an input or output port, simplifying UHD video hardware designs. The integrated reclocker locks to all supported SMPTE data rates up to 11.88 Gbps in both modes. The bidirectional I/O has an on-chip 75-Ω termination and return loss compensation network that meets the stringent SMPTE return loss requirements.

An additional 75-Ω driver output allows the LMH1297 to support a variety of system functions. In EQ (Equalizer) mode, this second 75-Ω driver can be used as a loop-through output. In Cable Driver (CD) mode, this 75-Ω driver can be used as a second fan-out cable driver. The host-side 100-Ω driver can also be used as a loop-back output in CD mode for monitoring purposes.

Device Information(1)

PART NUMBER	PACKAGE	BODY SIZE (NOM)
LMH1297	QFN (32)	5.00 mm × 5.00 mm

(1) For all available packages, see the orderable addendum at the end of the data sheet.

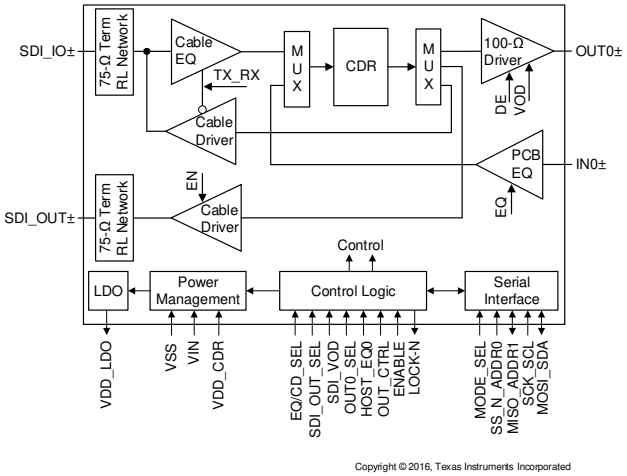

Simplified Block Diagram

An IMPORTANT NOTICE at the end of this data sheet addresses availability, warranty, changes, use in safety-critical applications, intellectual property matters and other important disclaimers. PRODUCTION DATA.

Table of Contents

1 Features....1
2 Applications....1
3 Description....1
4 Revision History....2
5 Description (continued)....3
6 Pin Configuration and Functions....4
7 Specifications....7
7.1 Absolute Maximum Ratings....7
7.2 ESD Ratings....7
7.3 Recommended Operating Conditions....7
7.4 Thermal Information....8
7.5 Electrical Characteristics....8
7.6 Recommended SMBus Interface Timing Specifications....14
7.7 Serial Parallel Interface (SPI) Timing Specifications....14
7.8 Typical Characteristics....16
8 Detailed Description....17
8.1 Overview....17
8.2 Functional Block Diagram....17
8.3 Feature Description....18
8.4 Device Functional Modes....25
8.5 Register Maps....29
9 Application and Implementation....30
9.1 Application Information....30
9.2 Typical Applications....31
10 Power Supply Recommendations....38
11 Layout....39
11.1 Layout Guidelines....39
11.2 Layout Example....41
12 Device and Documentation Support....42
12.1 Documentation Support....42
12.2 Receiving Notification of Documentation Updates....42
12.3 Support Resources....42
12.4 Trademarks....42
12.5 Electrostatic Discharge Caution....42
12.6 Glossary....42
13 Mechanical, Packaging, and Orderable Information....42

4 Revision History

NOTE: Page numbers for previous revisions may differ from page numbers in the current version.

Changes from Revision D (May 2020) to Revision E (July 2022)	Page
• Updated the numbering format for tables, figures, and cross-references throughout the document	1
• Added inclusive terminology throughout the data sheet	1
• Changed CD_{ON_IN0} and CD_{OFF_IN0} Test Condition to "11.88 Gbps PRBS10 pattern"	8
• Removed 12G/6G from V_{DC_WANDER} Test Condition	8
• Added table note to Serial Parallel Interface (SPI) Timing Specifications	14
• Updated Line-Side Adaptive Cable Equalizer (SDI_IO+ in EQ mode)	20
• Updated Line-Side Output Cable Driver (SDI_IO+ in CD mode, SDI_OUT+ in EQ or CD mode)	22

Changes from Revision C (July 2019) to Revision D (May 2020)	Page
• Changed HBM ESD rating and added pin 27 description	7

Changes from Revision B (September 2017) to Revision C (July 2019)	Page
• First public release of document	1

Copyright © 2022 Texas Instruments Incorporated

5 Description (continued)

The on-chip reclocker attenuates high-frequency jitter and fully regenerates the data using a clean, low-jitter clock. The reclocker has a built-in loop filter and does not require any input reference clock. The LMH1297 also has an internal eye opening monitor and a programmable pin for CDR lock indication, input carrier detect, or hardware interrupts to support system diagnostics and board bring-up.

The LMH1297 is powered from a single 2.5-V supply. It is offered in a small 5-mm × 5-mm, 32-pin QFN package.

Copyright © 2022 Texas Instruments Incorporated

6 Pin Configuration and Functions

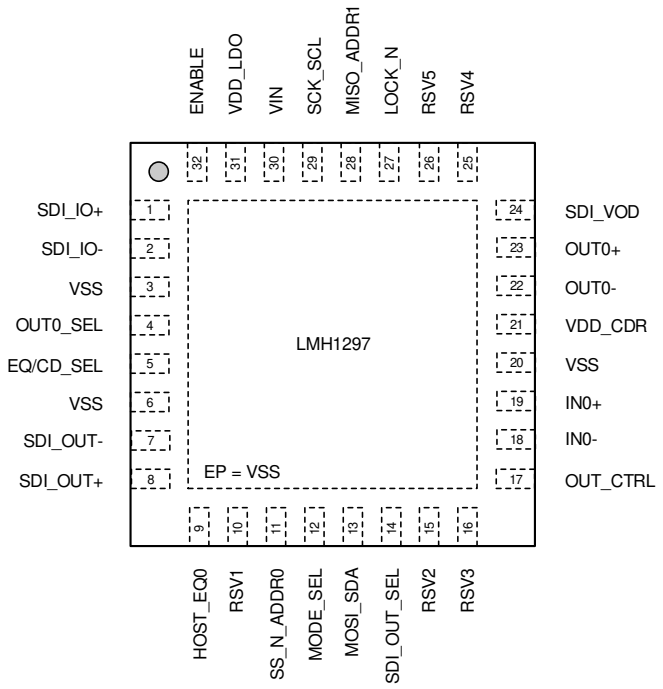

Copyright © 2016, Texas Instruments Incorporated

Figure 6-1. RTV Package 32-Pin QFN (Top View)

Table 6-1. Pin Functions

PIN		I/O[(1)]	DESCRIPTION
NAME	NO.		
HIGH-SPEED DIFFERENTIAL I/OS			
SDI_IO+	1	I/O, Analog	Single-ended complementary inputs or outputs with on-chip 75-Ω termination at SDI_IO+ and SDI_IO–. SDI_IO± include integrated return loss networks designed to meet the SMPTE input and output return loss requirements. Connect SDI_IO+ to a BNC through a 4.7-µF, AC-coupling capacitor. SDI_IO– should be similarly AC-coupled and terminated with an external 4.7-µF capacitor and 75-Ω resistor to GND. **EQ mode:** SDI_IO+ is the 75-Ω input port of the adaptive cable equalizer for SMPTE video applications. **CD mode:** SDI_IO+ is the 75-Ω output port of the cable driver for SMPTE video applications.
SDI_IO–	2	I/O, Analog	
SDI_OUT–	7	O, Analog	Single-ended complementary outputs with on-chip 75-Ω termination at SDI_OUT+ and SDI_OUT–. SDI_OUT± include integrated return loss networks designed to meet the SMPTE output return loss requirements. SDI_OUT± is used as a second cable driver. Connect SDI_OUT+ to a BNC through a 4.7-µF, AC-coupling capacitor. SDI_OUT– should be similarly AC-coupled and terminated with an external 4.7-µF capacitor and 75-Ω resistor to GND. **EQ mode:** SDI_OUT± can be enabled as a loop-through 75-Ω output port. It outputs the reclocked data from the adaptive cable equalizer to form a loop-through output with adaptive cable equalizer, reclocker, and cable driver. **CD mode:** SDI_OUT± is the second 75-Ω fan-out cable driver.
SDI_OUT+	8	O, Analog	
IN0–	18	I, Analog	Differential inputs from host video processor. On-chip 100-Ω differential termination. Requires external 4.7-µF, AC-coupling capacitors for SMPTE applications.
IN0+	19	I, Analog	
OUT0–	22	O, Analog	Differential outputs to host video processor. On-chip 100-Ω differential termination. Requires external 4.7-µF, AC-coupling capacitors for SMPTE applications.
OUT0+	23	O, Analog	
CONTROL PINS			

Copyright © 2022 Texas Instruments Incorporated

Table 6-1. Pin Functions (continued)

PIN		I/O[1]	DESCRIPTION
NAME	NO.		
OUT0_SEL	4	I, LVCMOS	OUT0_SEL enables the use of the 100-Ω host-side output driver at OUT0±. See Table 8-3 for details. OUT0_SEL is internally pulled high by default (OUT0 disabled).
EQ/CD_SEL	5	I, LVCMOS	EQ/CD_SEL selects the signal direction of the LMH1297 bidirectional I/O. It configures the LMH1297 as an adaptive equalizer (EQ mode) or as a cable driver (CD mode). See Table 8-2 for details. EQ/CD_SEL is internally pulled low by default (EQ mode).
HOST_EQ0	9	I, 4-LEVEL	HOST_EQ0 selects the driver output amplitude and de-emphasis level for OUT0± (in EQ mode) and equalizer setting for IN0± (in CD mode). See Table 8-5 and Table 8-10 for details.
MODE_SEL	12	I, 4-LEVEL	MODE_SEL enables the SPI or SMBus serial control interface. See Table 8-11 for details.
SDI_OUT_SEL	14	I, LVCMOS	SDI_OUT_SEL enables the use of the 75-Ω output driver at SDI_OUT±. See Table 8-3 for details. SDI_OUT_SEL is internally pulled high by default (SDI_OUT disabled).
OUT_CTRL	17	I, 4-LEVEL	OUT_CTRL selects the signal being routed to the output. It is used to enable or bypass the reclocker and to enable or bypass the cable equalizer. See Table 8-7 for details.
SDI_VOD	24	I, 4-LEVEL	SDI_VOD selects one of four output amplitudes for the cable drivers at SDI_IO± and SDI_OUT±. See Table 8-8 for details.
LOCK_N	27	O, LVCMOS, OD	LOCK_N is the reclocker lock indicator. LOCK_N is pulled low when the reclocker has acquired lock condition. LOCK_N is a 3.3-V tolerant, open-drain output. It requires an external resistor to a logic supply. LOCK_N can be reconfigured to indicate Carrier Detector (CD_N) or Interrupt (INT_N) through register programming. See *Section 8.3.10*.
ENABLE	32	I, LVCMOS	A logic-high at ENABLE enables normal operation for the LMH1297. A logic-low at ENABLE places the LMH1297 in Power-Down mode. ENABLE is internally pulled high by default.
SPI SERIAL CONTROL INTERFACE, MODE_SEL = F (FLOAT)			
SS_N	11	I, LVCMOS	SS_N is the Target Select. When SS_N is at logic Low, it enables SPI access to the LMH1297 target device. SS_N is a 2.5-V LVCMOS input and is internally pulled high by default.
MOSI	13	I, LVCMOS	MOSI is the SPI serial control data input to the LMH1297 target device when the SPI bus is enabled. MOSI is a 2.5-V LVCMOS input. An external pullup resistor is recommended.
MISO	28	O, LVCMOS	MISO is the SPI serial control data output from the LMH1297 target device. MISO is a 2.5-V LVCMOS output.
SCK	29	I, LVCMOS	SCK is the SPI serial input clock to the LMH1297 target device when the SPI interface is enabled. SCK is a 2.5-V LVCMOS input. An external pullup resistor is recommended.
SMBUS SERIAL CONTROL INTERFACE, MODE_SEL = L (1 KΩ TO VSS)			
ADDR0	11	Strap, 4-LEVEL	ADDR[1:0] are 4-level straps, read into the device at power up. They are used to select one of the 16 supported SMBus addresses when SMBus is enabled. See Table 8-12 for details.
SDA	13	I/O, LVCMOS, OD	SDA is the SMBus bidirectional data line to or from the LMH1297 target device when SMBus is enabled. SDA is an open-drain I/O and requires an external pullup resistor to the SMBus termination voltage. SDA is 3.3-V tolerant.
ADDR1	28	Strap, 4-LEVEL	ADDR[1:0] are 4-level straps, read into the device at power up. They are used to select one of the 16 supported SMBus addresses when SMBus is enabled. See Table 8-12 for details.
SCL	29	I/O, LVCMOS, OD	SCL is the SMBus input clock to the LMH1297 target device when SMBus is enabled. It is driven by a LVCMOS open-drain driver from the SMBus controller. SCL requires an external pullup resistor to the SMBus termination voltage. SCL is 3.3-V tolerant.

Copyright © 2022 Texas Instruments Incorporated

Table 6-1. Pin Functions (continued)

PIN		I/O[1]	DESCRIPTION
NAME	NO.		
RESERVED			
RSV1 RSV2 RSV3 RSV4 RSV5	10 15 16 25 26	—	Reserved pins. Do not connect.
POWER			
VSS	3, 6, 20	I, Ground	Ground reference.
VDD_CDR	21	I, Power	VDD_CDR powers the reclocker circuitry. It is connected to the same 2.5-V ± 5% supply as VIN.
VIN	30	I, Power	VIN is connected to an external 2.5-V ± 5% power supply.
VDD_LDO	31	O, Power	VDD_LDO is the output of the internal 1.8-V LDO regulator. VDD_LDO output requires an external 1-µF and 0.1-µF bypass capacitor to VSS. The internal LDO is designed to power internal circuitry only.
EP	—	I, Ground	EP is the exposed pad at the bottom of the RTV package. The exposed pad should be connected to the VSS plane through a 3 × 3 via array.

(1) I = input, O = output, I/O = input or output, OD = open drain, LVCMOS = 2-state logic, 4-LEVEL = 4-state logic

Copyright © 2022 Texas Instruments Incorporated

7 Specifications

7.1 Absolute Maximum Ratings

over operating free-air temperature range (unless otherwise noted)[1]

	MIN	MAX	UNIT
Supply voltage (VIN, VDD_CDR)	–0.5	2.75	V
Input voltage for 4-level pins	–0.5	2.75	V
Input/output voltage for 2-level control pins	–0.5	2.75	V
SMBus input/output voltage (SDA, SCL)	–0.5	4	V
SPI input/output voltage (SS_N, MISO, MOSI, and SCK)	–0.5	2.75	V
High-speed input/output voltage (IN0±, SDI_IO±, OUT0±, SDI_OUT±)	–0.5	2.75	V
Input current (IN0±, SDI_IO±)	–30	30	mA
Operating junction temperature		125	°C
Storage temperature, T_{stg}	–65	150	°C

(1) Stresses beyond those listed under *Absolute Maximum Ratings* may cause permanent damage to the device. These are stress ratings only, which do not imply functional operation of the device at these or any other conditions beyond those indicated under *Recommended Operating Conditions*. Exposure to absolute-maximum-rated conditions for extended periods may affect device reliability.

7.2 ESD Ratings

				VALUE	UNIT
$V_{(ESD)}$	Electrostatic discharge	Human-body model (HBM), per ANSI/ESDA/JEDEC JS-001[1]	All pins except 13, 27, and 29	±6000	V
			Pins 13, 27, and 29	±5000	
		Charged-device model (CDM), per JEDEC specification JESD22-C101[2]		±1500	

(1) JEDEC document JEP155 states that 500-V HBM allows safe manufacturing with a standard ESD control process. Manufacturing with less than 500-V HBM is possible with the necessary precautions.
(2) JEDEC document JEP157 states that 250-V CDM allows safe manufacturing with a standard ESD control process. Manufacturing with less than 250-V CDM is possible with the necessary precautions.

7.3 Recommended Operating Conditions

over operating free-air temperature range (unless otherwise noted)

			MIN	NOM	MAX	UNIT
	Supply voltage	VIN, VDD_CDR to VSS	2.375	2.5	2.625	V
VDD_{SMBUS}	SMBus: SDA, SCL open-drain termination voltage		2.375		3.6	V
$V_{SDI_IO_LAUNCH}$	Source launch amplitude before coaxial cable to SDI_IO+	Normal mode	0.72	0.8	0.88	Vp-p
		Splitter mode	0.36	0.4	0.44	
V_{IN0_LAUNCH}	Source differential launch amplitude	Before 5-inch board trace to IN0±	300		850	mVp-p
		Before 20-inch board trace to IN0±	650		1000	
$T_{JUNCTION}$	Operating junction temperature				110	°C
$T_{AMBIENT}$	Ambient temperature		–40	25	85	°C
$NTps_{max}$	Maximum supply noise[1]	50 Hz to 1 MHz, sinusoidal		< 20		mVp-p
		1.1 MHz to 50 MHz, sinusoidal		< 10		

(1) The sum of the DC supply voltage and AC supply noise should not exceed the recommended supply voltage range.

7.4 Thermal Information

THERMAL METRIC[1]		LMH1297 RTV (QFN) 32 PINS	UNIT
$R_{\theta JA}$	Junction-to-ambient thermal resistance	32.5	°C/W
$R_{\theta JC(top)}$	Junction-to-case (top) thermal resistance	15.0	°C/W
$R_{\theta JB}$	Junction-to-board thermal resistance	6.5	°C/W
ψ_{JT}	Junction-to-top characterization parameter	0.2	°C/W
ψ_{JB}	Junction-to-board characterization parameter	6.5	°C/W
$R_{\theta JC(bot)}$	Junction-to-case (bottom) thermal resistance	1.7	°C/W

(1) For more information about traditional and new thermal metrics, see the *Semiconductor and IC Package Thermal Metrics* application report.

7.5 Electrical Characteristics

over operating free-air temperature range (unless otherwise noted)

PARAMETER		TEST CONDITIONS	MIN	TYP	MAX	UNIT
POWER						
PD_{EQ_MODE}	Power dissipation, EQ Mode, Measured with PRBS10, CDR Locked to 11.88 Gbps, VOD = default, HEO/VEO lock monitor disabled	SDI_OUT± disabled OUT0± enabled		275		mW
		SDI_OUT± enabled OUT0± enabled		418		mW
PD_{CD_MODE}	Power dissipation, CD Mode, Measured with PRBS10, CDR Locked to 11.88 Gbps, VOD = default, HEO/VEO lock monitor disabled	SDI_IO± enabled SDI_OUT± disabled OUT0± disabled		305		mW
		SDI_IO± enabled SDI_OUT± disabled OUT0± enabled		350		mW
		SDI_IO± enabled SDI_OUT± enabled OUT0± disabled		442		mW
		SDI_IO± enabled SDI_OUT± enabled OUT0± enabled		485		mW
PD_Z	Power dissipation, Power Save Mode	EQ Mode, Power Save Mode, ENABLE = H, no signal applied at SDI_IO+		25		mW
		CD Mode, Power Save Mode, ENABLE = H, no signal applied at IN0±		25		mW
IDD_{EQ_MODE}	Current consumption, EQ Mode, Measured with PRBS10, CDR Locked to 11.88 Gbps, VOD = default, HEO/VEO lock monitor disabled	SDI_OUT± disabled OUT0± enabled		110	137	mA
		SDI_OUT± enabled OUT0± enabled		167	200	mA

Copyright © 2022 Texas Instruments Incorporated

7.5 Electrical Characteristics (continued)

over operating free-air temperature range (unless otherwise noted)

PARAMETER		TEST CONDITIONS	MIN	TYP	MAX	UNIT
IDD_{CD_MODE}	Current consumption, CD Mode, Measured with PRBS10, CDR Locked to 11.88 Gbps, VOD = default, HEO/VEO lock monitor disabled	SDI_IO± enabled SDI_OUT± disabled OUT0± disabled		122	146	mA
		SDI_IO± enabled SDI_OUT± disabled OUT0± enabled		140	166	mA
		SDI_IO± enabled SDI_OUT± enabled OUT0± disabled		177	211	mA
		SDI_IO± enabled SDI_OUT± enabled OUT0± enabled		194	230	mA
IDD_Z	Current consumption, Power Save Mode	EQ Mode, Power Save Mode, ENABLE = H, no signal applied at SDI_IO+		10		mA
		CD Mode, Power Save Mode, ENABLE = H, no signal applied at IN0±		10		mA
IDD_{Z_PD}	Current consumption, Power-Down Mode	EQ Mode, Power-Down Mode, ENABLE = L, no signal applied at SDI_IO+		10	30	mA
		CD Mode, Power-Down Mode, ENABLE = L, no signal applied at IN0±		10	30	
IDD_{TRANS_EQ}	Current consumption, EQ Mode CDR acquiring lock to 11.88 Gbps, VOD = default, HEO/VEO lock monitor enabled	SDI_OUT± disabled OUT0± enabled			205	mA
		SDI_OUT± enabled OUT0± enabled			260	mA
IDD_{TRANS_CD}	Current consumption, CD Mode CDR acquiring lock to 11.88 Gbps, VOD = default, HEO/VEO lock monitor enabled	SDI_IO± enabled SDI_OUT± disabled OUT0± disabled			200	mA
		SDI_IO± enabled SDI_OUT± disabled OUT0± enabled			225	mA
		SDI_IO± enabled SDI_OUT± enabled OUT0± disabled			271	mA
		SDI_IO± enabled SDI_OUT± enabled OUT0± enabled			290	mA
LVCMOS DC SPECIFICATIONS						
V_{IH}	Logic high input voltage	2-level input (SS_N, SCK, MOSI, EQ/CD_SEL, SDI_OUT_SEL, OUT0_SEL, ENABLE)	0.72 × VIN		VIN + 0.3	V
		2-level input (SCL, SDA)	0.7 × VIN		3.6	V
V_{IL}	Logic low input voltage	2-level input (SS_N, SCK, MOSI, EQ/CD_SEL, SDI_OUT_SEL, OUT0_SEL, ENABLE, SCL, SDA)	0		0.3 × VIN	V
V_{OH}	Logic high output voltage	IOH = –2 mA, (MISO)	0.8 × VIN		VIN	V
V_{OL}	Logic low output voltage	IOL = 2 mA, (MISO)	0		0.2 × VIN	V
		IOL = 3 mA, (LOCK_N, SDA)			0.4	V

7.5 Electrical Characteristics (continued)

over operating free-air temperature range (unless otherwise noted)

PARAMETER		TEST CONDITIONS	MIN	TYP	MAX	UNIT
I_{IH}	Input high leakage current (Vinput = VIN)	LVCMOS (EQ/CD_SEL, SDI_OUT_SEL, ENABLE)			15	µA
		LVCMOS (OUT0_SEL)			65	µA
		LVCMOS (LOCK_N)			10	µA
		SPI mode: LVCMOS (SS_N, SCK, MOSI)			15	µA
		SMBus mode: LVCMOS (SCL, SDA)			10	µA
I_{IL}	Input low leakage current (Vinput = GND)	LVCMOS (EQ/CD_SEL, SDI_OUT_SEL, ENABLE)	–50			µA
		LVCMOS (OUT0_SEL)	–15			µA
		LVCMOS (LOCK_N)	–10			µA
		SPI mode: LVCMOS (SCK, MOSI)	–15			µA
		SPI mode: LVCMOS (SS_N)	–50			µA
		SMBus mode: LVCMOS (SCL, SDA)	–10			µA
4-LEVEL LOGIC DC SPECIFICATIONS (APPLY TO ALL 4-LEVEL INPUT CONTROL PINS)						
V_{LVL_H}	LEVEL-H input voltage	Measured voltage at 4-level pin with external 1 kΩ to VIN		VIN		V
V_{LVL_F}	LEVEL-F default voltage	Measured voltage 4-level pin at default		2/3 × VIN		V
V_{LVL_R}	LEVEL-R input voltage	Measured voltage at 4-level pin with external 20 kΩ to VSS		1/3 × VIN		V
V_{LVL_L}	LEVEL-L input voltage	Measured voltage at 4-level pin with external 1 kΩ to VSS		0		V
I_{IH}	Input high leakage current (Vinput = VIN)	4-levels (HOST_EQ0, MODE_SEL, OUT_CTRL, SDI_VOD)	20	45	80	µA
		SMBus mode: 4-levels (ADDR0, ADDR1)	20	45	80	µA
I_{IL}	Input low leakage current (Vinput = GND)	4-levels (HOST_EQ0, MODE_SEL, OUT_CTRL, SDI_VOD)	–160	–93	–40	µA
		SMBus mode: 4-levels (ADDR0, ADDR1)	–160	–93	–40	µA
RECEIVER SPECIFICATIONS (SDI_IO+, EQ MODE)						
$R_{SDI_IO_TERM}$	DC input single-ended termination	SDI_IO+ and SDI_IO– to internal common mode bias	63	75	87	Ω
$RL_{SDI_IO_S11}$	Input return loss at SDI_IO+ reference to 75 Ω[(1)]	S11, 5 MHz to 1.485 GHz		–30		dB
		S11, 1.485 GHz to 3 GHz		–22		dB
		S11, 3 GHz to 6 GHz		–12		dB
		S11, 6 GHz to 12 GHz		–8		dB
$V_{SDI_IO_CM}$	SDI_IO+ DC common-mode voltage	Input DC common-mode voltage at SDI_IO+ or SDI_IO- to GND		1.4		V
$V_{SDI_IO_WANDER}$	Input DC wander	SD, input signal at SDI_IO+, Input launch amplitude = 800 mVp-p		100		mVp-p
		HD, 3G, 6G, 12G, input signal at SDI_IO+, Input launch amplitude = 800 mVp-p		50		mVp-p
RECEIVER SPECIFICATIONS (IN0±, CD MODE)						
R_{IN0_TERM}	DC input differential termination	Measured across IN0+ to IN0–	80	100	120	Ω
RL_{IN0_SDD11}	Input differential return loss[(1)]	SDD11, 10 MHz – 2.8 GHz		–22		dB
		SDD11, 2.8 GHz – 6 GHz		–16		dB
		SDD11, 6 GHz – 11.1 GHz		–10		dB
RL_{IN0_SCD11}	Differential to common-mode input conversion[(1)]	SCD11, 10 MHz to 11.1 GHz		–21		dB

Copyright © 2022 Texas Instruments Incorporated

7.5 Electrical Characteristics (continued)

over operating free-air temperature range (unless otherwise noted)

PARAMETER		TEST CONDITIONS	MIN	TYP	MAX	UNIT
V_{IN0_CM}	DC common-mode voltage	Input common-mode voltage at IN0+ or IN0– to GND		2.06		V
CD_{ON_IN0}	Signal detect (default) Assert ON threshold level for IN0±	11.88 Gbps PRBS10 pattern		20		mVp-p
CD_{OFF_IN0}	Signal detect (default) Deassert OFF threshold level for IN0±	11.88 Gbps PRBS10 pattern		18		mVp-p
DRIVER OUTPUT (SDI_IO+ AND SDI_OUT+, CD MODE)						
R_{OUT_TERM}	DC output single-ended termination	SDI_IO+ and SDI_IO–, SDI_OUT+ and SDI_OUT– to VIN	63	75	87	Ω
VOD_{CD_OUTP}	Output single-ended output voltage	Measure AC signal at SDI_IO+ and SDI_OUT+, with SDI_IO– and SDI_OUT– AC terminated with 75 Ω SDI_VOD = H		840		mVp-p
		SDI_VOD = F	720	800	880	mVp-p
		SDI_VOD = R		880		mVp-p
		SDI_VOD = L		760		mVp-p
VOD_{CD_OUTN}	Output single-ended output voltage	Measure AC signal at SDI_IO– and SDI_OUT-, with SDI_IO+ and SDI_OUT+ AC terminated with 75 Ω SDI_VOD = H		840		mVp-p
		SDI_VOD = F	720	800	880	mVp-p
		SDI_VOD = R		880		mVp-p
		SDI_VOD = L		760		mVp-p
PRE_{CD_OUTP}	Output pre-emphasis	Output pre-emphasis boost amplitude at SDI_IO+ and SDI_OUT+, programmed to maximum setting through register, measured at SDI_VOD=F		2		dB
PRE_{CD_OUTN}	Output pre-emphasis	Output pre-emphasis boost amplitude at SDI_IO– and SDI_OUT–, programmed to maximum setting through register, measured at SDI_VOD=F		2		dB
$t_{R_F_SDI}$	Output rise and fall time(1)	Measured with PRBS10 pattern, default VOD at 20% – 80% amplitude, default pre-emphasis enabled 11.88 Gbps		34	42	ps
		5.94 Gbps		36	43	ps
		2.97 Gbps		59	67	ps
		1.485 Gbps		60	73	ps
		270 Mbps	400	550	700	ps
$t_{R_F_DELTA}$	Output rise and fall time mismatch(1)	Measured with PRBS10 pattern, default VOD at 20% – 80% amplitude, default pre-emphasis enabled 11.88 Gbps		3	18	ps
		5.94 Gbps		2.7	12	ps
		2.97 Gbps		0.8	11	ps
		1.485 Gbps		0.8	12	ps
		270 Mbps		72	150	ps
$V_{OVERSHOOT}$	Output overshoot or undershoot(1)	Measured with PRBS10 pattern, default VOD, default pre-emphasis enabled(3) 12G/6G/3G/HD/SD		5%		

7.5 Electrical Characteristics (continued)

over operating free-air temperature range (unless otherwise noted)

PARAMETER		TEST CONDITIONS	MIN	TYP	MAX	UNIT
V_{DC_OFFSET}	DC offset	12G/6G/3G/HD/SD		±0.2		V
V_{DC_WANDER}	DC wander	3G/HD/SD with EQ pathological pattern		20		mV
RL_{CD_S22}	Output return loss at SDI_IO+ and SDI_OUT+ reference to 75 Ω(1)	S22, 5 MHz to 1.485 GHz		–25		dB
		S22, 1.485 GHz to 3 GHz		–22		dB
		S22, 3 GHz to 6 GHz		–12		dB
		S22, 6 GHz to 12 GHz		–8		dB
DRIVER OUTPUT (OUT0±, EQ AND CD MODE)						
R_{OUT0_TERM}	DC output differential termination	Measured across OUT0+ and OUT0–	80	100	120	Ω
VOD_{OUT0}	Output differential voltage at OUT0±	Measured with 8T pattern HOST_EQ0 = H		410		mVp-p
		HOST_EQ0 = F	485	560	620	mVp-p
		HOST_EQ0 = R		635		mVp-p
		HOST_EQ0 = L		810		mVp-p
VOD_{OUT0_DE}	De-emphasized output differential voltage at OUT0±	Measured with 8T pattern HOST_EQ0 = H		410		mVp-p
		HOST_EQ0 = F		550		mVp-p
		HOST_EQ0 = R		545		mVp-p
		HOST_EQ0 = L		532		mVp-p
t_R/t_F	Output rise and fall time	Measured with 8T Pattern, 20% – 80% amplitude		45		ps
$RL_{OUT0\text{-}SDD22}$	Output differential return loss(1)	Measured with the device powered up and outputs a 10-MHz clock signal SDD22, 10 MHz – 2.8 GHz		–24		dB
		SDD22, 2.8 GHz – 6 GHz		–16		dB
		SDD22, 6 GHz – 11.1 GHz		–15		dB
$RL_{OUT0\text{-}SCC22}$	Output common-mode return loss(1)	Measured with the device powered up and outputs a 10-MHz clock signal. SCC22, 10 MHz – 4.75 GHz		–12		dB
		SCC22, 4.75 GHz – 11.1 GHz		–9		dB
V_{OUT0_CM}	AC common-mode voltage on OUT0±(1)	Default setting, PRBS31, 11.88 Gbps		8		mV (rms)
RECLOCKER OUTPUT JITTER (EQ MODE)						
TJ_{EQ_MODE}	Total jitter, reclocked output(1)(2)	Measured at OUT0±, with SDI_OUT disabled (BER ≤ 1E-12), PRBS10, TX launch amplitude = 800 mVp-p before cable to SDI_IO+ 11.88 Gbps: 75-m Belden 1694A		0.14	0.18	UIp-p
		5.94 Gbps: 120-m Belden 1694A		0.1		
		2.97 Gbps: 200-m Belden 1694A		0.1		
		1.485 Gbps: 300-m Belden 1694A		0.1		
		270 Mbps: 600-m Belden 1694A		0.11		
TJ_{RAW}	Total jitter, with CDR bypassed	Measured at OUT0±, with SDI_OUT disabled (BER ≤ 1E-12), PRBS10, TX launch amplitude = 800 mVp-p before cable to SDI_IO+ 125 Mbps: 600-m Belden 1694A		0.2		UIp-p
RECLOCKER OUTPUT JITTER (CD MODE)						

Copyright © 2022 Texas Instruments Incorporated

7.5 Electrical Characteristics (continued)

over operating free-air temperature range (unless otherwise noted)

PARAMETER		TEST CONDITIONS	MIN	TYP	MAX	UNIT
AJ_{CD_MODE}	Alignment jitter[1]	Measured at SDI_IO+ and SDI_OUT+, OUT0± disabled PRBS10, 3G/HD/SD12G/6G/3G/HD/SD		0.1	0.14	UI
TMJ_{CD_MODE}	Timing jitter[1]	Measured at SDI_IO+ and SDI_OUT+, OUT0± disabled PRBS10, 12G/6G/3G/HD/SD		0.45		UI
RECLOCKER SPECIFICATIONS (EQ MODE UNLESS OTHERWISE SPECIFIED)						
$LOCK_{RATE}$	Reclocker lock data rates	SMPTE 12G, /1		11.88		Gbps
		SMPTE 12G, /1.001		11.868		Gbps
		SMPTE 6G, /1		5.94		Gbps
		SMPTE 6G, /1.001		5.934		Gbps
		SMPTE 3G, /1		2.97		Gbps
		SMPTE 3G, /1.001		2.967		Gbps
		SMPTE HD, /1		1.485		Gbps
		SMPTE HD, /1.001		1.4835		Gbps
		SMPTE SD, /1		270		Mbps
$BYPASS_{RATE}$	Reclocker automatically goes to bypass	MADI		125		Mbps
BW_{PLL}	PLL Bandwidth	Applied 0.2 UI input sinusoidal jitter, measure –3-dB bandwidth on input-to-output jitter transfer 11.88 Gbps		13		MHz
		5.94 Gbps		7		MHz
		2.97 Gbps		5		MHz
		1.485 Gbps		3		MHz
		270 Mbps		1		MHz
$J_{PEAKING}$	PLL jitter peaking	11.88 Gbps, 5.94 Gbps, 2.97 Gbps, 1.485 Gbps, 270 Mbps		<0.3		dB
J_{TOL_IN}	SDI_IO+ input jitter tolerance	Sinusoidal jitter tolerance, tested at 3G, 6G and 12G, SJ amplitude swept from 1 MHz to 80 MHz, tested at BER ≤ 1E-12, cable equalizer at SDI_IO+ bypassed		0.65		UI
T_{LOCK}	Lock time	SMPTE supported data rates, disable HEO/VEO monitor, cable equalizer at SDI_IO+ bypassed		5		ms
T_{ADAPT}	EQ adapt time at EQ Mode	Adaptation time for cable equalizer at SDI_IO+, reclocker bypassed		5		ms
$TEMP_{LOCK}$	VCO temperature lock range	Measured with temperature ramp of 5°C per min, ramp up and down, –40°C to 85°C operating range at 11.88 Gbps		125		°C
$TLAT_{EQ_MODE}$	Reclocker latency at EQ Mode	Measured from SDI_IO+ to OUT0, 11.88 Gbps, SDI_IO+, 75-m Belden 1694A at SDI_IO+		1.4 UI + 465		ps
		Measured from SDI_IO+ to SDI_OUT+, 11.88 Gbps, SDI_IO+, 75-m Belden 1694A at SDI_IO+		1.7 UI + 415		ps

7.5 Electrical Characteristics (continued)

over operating free-air temperature range (unless otherwise noted)

PARAMETER		TEST CONDITIONS	MIN	TYP	MAX	UNIT
$TLAT_{CD_MODE}$	Reclocker latency at CD Mode	Measured from IN0± to SDI_IO+, 11.88 Gbps		1.5 UI + 175		ps
		Measured from IN0± to SDI_OUT+, 11.88 Gbps		1.6 UI + 130		ps

(1) This parameter is measured with the LMH1297EVM (Evaluation board for LMH1297).
(2) This limit is ensured by bench characterization and is not production tested.
(3) $V_{OVERSHOOT}$ overshoot/undershoot maximum measurements are largely affected by the PCB layout and input test pattern. The maximum value specified in *Section 7.5* for $V_{OVERSHOOT}$ is based on bench evaluation across temperature and supply voltages with the LMH1297EVM.

7.6 Recommended SMBus Interface Timing Specifications

over recommended operating supply and temperature ranges unless otherwise specified(1)

PARAMETER		TEST CONDITIONS	MIN	NOM	MAX	UNIT
F_{SCL}	SMBUS SCL frequency		10		400	kHz
T_{BUF}	Bus free time between stop and start condition	See Figure 7-1.	1.3			µs
$T_{HD:STA}$	Hold time after (repeated) start condition.	After this period, the first clock is generated.	0.6			µs
$T_{SU:STA}$	Repeated start condition setup time	See Figure 7-1.	0.6			µs
$T_{SU:STO}$	Stop condition setup time	See Figure 7-1.	0.6			µs
$T_{HD:DAT}$	Data hold time	See Figure 7-1.	0			ns
$T_{SU:DAT}$	Data setup time	See Figure 7-1.	100			ns
T_{LOW}	Clock low period	See Figure 7-1.	1.3			µs
T_{HIGH}	Clock high period	See Figure 7-1.	0.6			µs
T_R	Clock and data rise time	See Figure 7-1.			300	ns
T_F	Clock and data fall time	See Figure 7-1.			300	ns
T_{POR}	SMBus ready time after POR	Time from minimum VDDIO to SMBus valid write or read access			50	ms

(1) These parameters support SMBus 2.0 specifications.

7.7 Serial Parallel Interface (SPI) Timing Specifications

over recommended operating supply and temperature ranges unless otherwise specified(1) (2)

PARAMETER		TEST CONDITIONS	MIN	NOM	MAX	UNIT
F_{SCK}	SPI SCK frequency				20	MHz
T_{PH}	SCK pulse width high	See Figure 7-2 and Figure 7-3	40			% SCK period
T_{PL}	SCK pulse width low	See Figure 7-2 and Figure 7-3	40			% SCK period
T_{SU}	MOSI setup time	See Figure 7-2 and Figure 7-3	4			ns
T_H	MOSI hold time	See Figure 7-2 and Figure 7-3	4			ns
T_{SSSU}	SS setup time	See Figure 7-2 and Figure 7-3	14			ns
T_{SSH}	SS hold time	See Figure 7-2 and Figure 7-3	4			ns
T_{SSOF}	SS off time	See Figure 7-2 and Figure 7-3	1			µs
T_{ODZ}	MISO driven-to-tristate time	See Figure 7-2 and Figure 7-3		20		ns
T_{OZD}	MISO tristate-to-driven time	See Figure 7-2 and Figure 7-3		10		ns
T_{OD}	MISO output delay time	See Figure 7-2 and Figure 7-3		15		ns

(1) Typical SPI load capacitance is 2 pF.
(2) It is recommended to initiate SPI access 16 mS after power up.

Copyright © 2022 Texas Instruments Incorporated

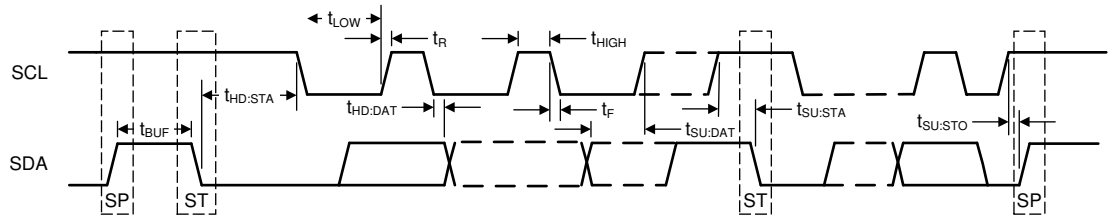

Figure 7-1. SMBus Timing Parameters

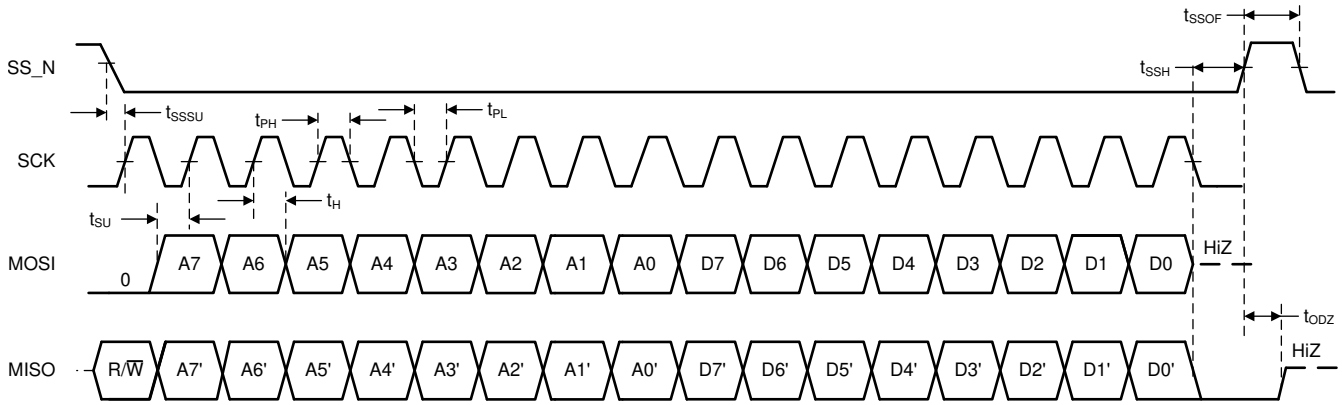

Figure 7-2. SPI Timing Parameters (Write Operation)

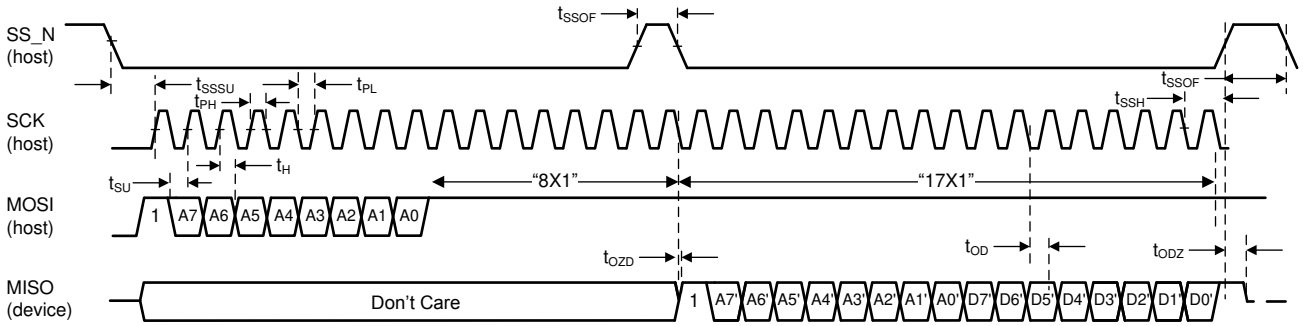

Figure 7-3. SPI Timing Parameters (Read Operation)

7.8 Typical Characteristics

T_A = 25°C and VIN = VDD_CDR = 2.5 V (unless otherwise noted)

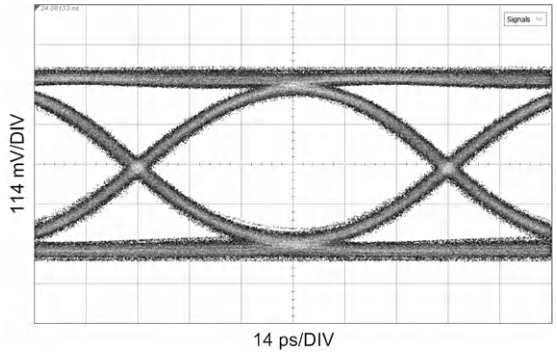

Figure 7-4. EQ Mode at 11.88 Gbps, Measured at OUT0±, 75-m Belden 1694A Before SDI_IO+

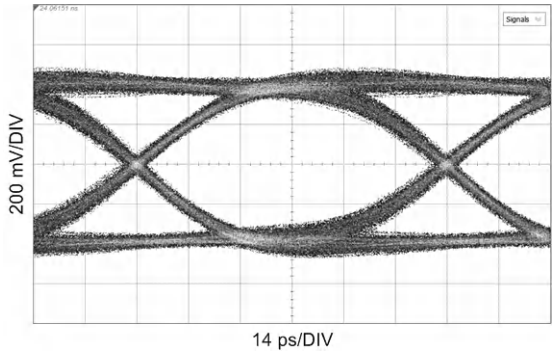

Figure 7-5. CD Mode at 11.88 Gbps, Measured at SDI_IO+, 20-in. FR4 Before IN0±

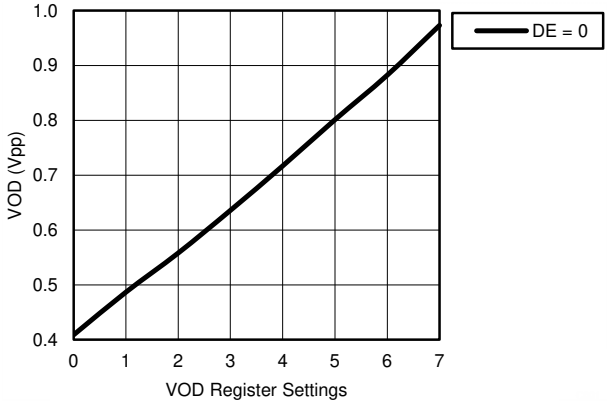

Figure 7-6. OUT0 VOD vs. OUT0 VOD and DE Register Settings

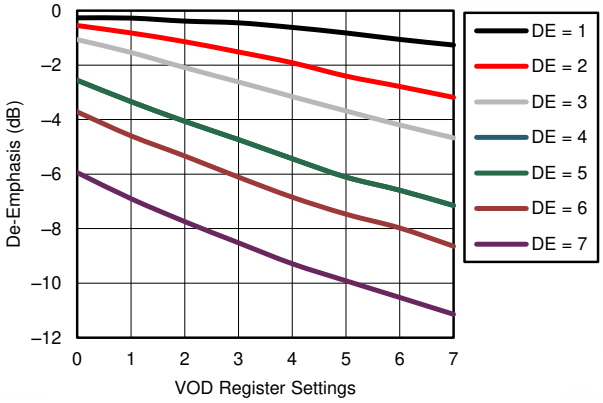

Figure 7-7. OUT0 De-Emphasis vs. OUT0 VOD and DE Register Settings

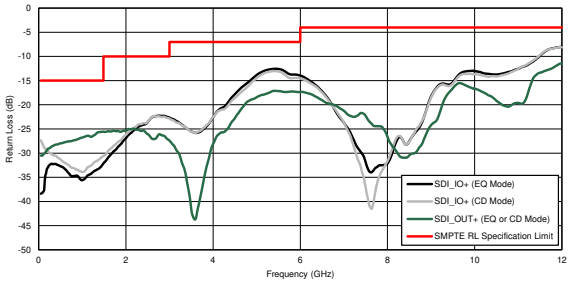

Measured with LMH1297EVM

Figure 7-8. Return Loss (RL) vs Frequency

Copyright © 2022 Texas Instruments Incorporated

8 Detailed Description

8.1 Overview

The LMH1297 is a 12G UHD-SDI 75-Ω bidirectional I/O with integrated reclocker. This device can be configured either as an adaptive cable equalizer or as a cable driver with integrated reclocker, supporting all SMPTE video rates up to 11.88 Gbps. The bidirectional I/O has an on-chip 75-Ω termination and return loss compensation network that provides ease of use and meets stringent SMPTE return loss requirements. The LMH1297 allows system designers the flexibility to use a single BNC either as an input or output port, simplifying UHD video hardware designs.

Equalizer mode (EQ mode): SDI_IO+ is configured as a 75-Ω adaptive cable equalizer. The input signal then goes through a reclocker, followed by a 100-Ω driver with de-emphasis at OUT0±. A second 75-Ω cable driver provides a reclocked loop-through output of SDI_IO+ at SDI_OUT+. This second signal path from SDI_IO+ to SDI_OUT+ forms a SDI cable loop-through.

Cable Driver mode (CD mode): SDI_IO+ is configured as a 75-Ω cable driver with a reclocked signal sourced from IN0±. SDI_OUT+ serves as a second 75-Ω cable driver to offer 1:2 fan-out buffering from IN0± to SDI_IO+ and SDI_OUT+. The 100-Ω driver at OUT0± can be used as a host-side loop-back output for monitoring purposes.

The on-chip reclocker attenuates high-frequency jitter and fully regenerates the data using a clean, low-jitter clock. The reclocker has a built-in loop filter and does not require any input reference clock. The LMH1297 also has an internal eye opening monitor and a programmable pin for CDR lock indication, input carrier detect, or hardware interrupts to support system diagnostics and board bring-up.

The LMH1297 is powered from a single 2.5-V supply with an on-chip 1.8-V LDO regulator. The operating state of the LMH1297 can be configured through control pins, SPI, or SMBus serial control interface. In the absence of an input signal, the LMH1297 automatically goes into Power Save mode. Users can also set the device into power-down operation through the ENABLE control pin. The LMH1297 is offered in a small 5-mm × 5-mm, 32-pin QFN package.

8.2 Functional Block Diagram

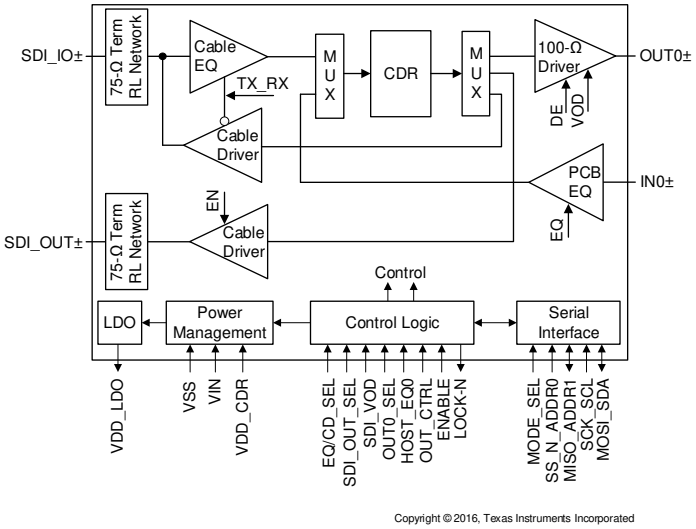

Figure 8-1. LMH1297 Block Diagram Overview

Note

Only one I/O path can be active at a time. In EQ mode, the cable equalizer at SDI_IO is enabled, and the SDI_IO cable driver is powered down. In CD mode, the cable driver at SDI_IO is enabled, and the SDI_IO cable equalizer is powered down.

8.3 Feature Description

The LMH1297 data path consists of several key blocks as shown in the functional block diagram. These key blocks are:

- *4-Level Input Pins and Thresholds*
- *Equalizer (EQ) and Cable Driver (CD) Mode Control*
- *Input Carrier Detect*
- *−6-dB Splitter Mode Launch Ampiltude for SDI_IO+ (EQ Mode Only)*
- *Continuous Time Linear Equalizer (CTLE)*
- *Clock and Data (CDR) Recovery*
- *Internal Eye Opening Monitor (EOM)*
- *Output Function Control*
- *Output Driver Control*
- *Status Indicators and Interrupts*

8.3.1 4-Level Input Pins and Thresholds

The 4-level input configuration pins use a resistor divider to provide four logic states for each control pin. There is an internal 30-kΩ pullup and a 60-kΩ pulldown connected to the control pin that sets the default voltage at 2/3 × VIN. These resistors are combined with the external resistor to achieve the desired voltage level. By using the 1-kΩ pulldown, 20-kΩ pulldown, no connect, and 1-kΩ pullup, the optimal voltage levels for each of the four input states are achieved as shown in Table 8-1.

Table 8-1. 4-Level Control Pin Settings

LEVEL	SETTING	NOMINAL PIN VOLTAGE
H	Tie 1 kΩ to VIN	VIN
F	Float (leave pin open)	2/3 × VIN
R	Tie 20 kΩ to VSS	1/3 × VIN
L	Tie 1 kΩ to VSS	0

Typical 4-Level Input Thresholds:

- Internal Threshold between L and R = 0.2 × VIN
- Internal Threshold between R and F = 0.5 × VIN
- Internal Threshold between F and H = 0.8 × VIN

8.3.2 Equalizer (EQ) and Cable Driver (CD) Mode Control

The input and output signal flow of the LMH1297 is determined by the EQ/CD_SEL, OUT0_SEL, and SDI_OUT_SEL pins.

8.3.2.1 EQ/CD_SEL Control

The EQ/CD_SEL pin selects the I/O as either an input (EQ mode) or an output (CD mode). The logic level applied to the EQ/CD_SEL pin automatically powers down the unused I/O direction. For example, if the LMH1297 is in EQ mode (EQ/CD_SEL = L), then the SDI_IO cable driver is powered down.

Table 8-2. EQ/CD_SEL Pin Settings

EQ/CD_SEL	INPUT	MODE	NOTES
L	SDI_IO+	EQ mode	75-Ω video input to SDI_IO+. OUT0± automatically enabled. SDI_IO Cable Driver powered down.
H	IN0±	CD mode	100-Ω input to IN0±. SDI_IO+ enabled as a cable driver output. SDI_OUT programmable as a secondary cable driver output. SDI_IO Equalizer powered down.

Copyright © 2022 Texas Instruments Incorporated

The EQ/CD_SEL pin should be strapped at power up for normal operation. After power up, the EQ/CD_SEL pin state can be dynamically changed from EQ mode to CD mode and vice versa. When changing the EQ/CD_SEL state after power up, the signal flow to the reclocker is momentarily disturbed, and the chip automatically initiates a CDR reset to relock to the new input signal.

8.3.2.2 OUT0_SEL and SDI_OUT_SEL Control

The OUT0_SEL and SDI_OUT_SEL pins work in conjunction with the EQ/CD_SEL pin to select the LMH1297 data-path routes. Table 8-3 shows all possible signal path combinations and typical use cases for each configuration.

Table 8-3. LMH1297 Signal Path Combinations

EQ/CD_SEL (MODE)	OUT0_SEL	SDI_OUT_SEL	INPUT	MAIN OUTPUT	LINE SIDE LOOP-THRU OUTPUT	HOST SIDE LOOP-BACK OUTPUT	TYPICAL APPLICATION
L (EQ mode)	X	H	SDI_IO+	OUT0±			Adaptive cable equalizer
	X	L	SDI_IO+	OUT0±	SDI_OUT±		Adaptive cable equalizer with line-side loop-through output
H (CD mode)	H	H	IN0±	SDI_IO+			Single cable driver
	H	L	IN0±	SDI_IO+	SDI_OUT±		Dual cable drivers
	L	H	IN0±	SDI_IO+		OUT0±	Single cable driver with host-side loop-back enabled
	L	L	IN0±	SDI_IO+	SDI_OUT±	OUT0±	Dual cable drivers with host-side loop-back enabled

8.3.3 Input Carrier Detect

SDI_IO (in EQ mode) and IN0 have a carrier detect circuit to monitor the presence or absence of an input signal. When the input signal amplitude for the selected input exceeds the carrier detect assert threshold, the LMH1297 operates in normal operation mode.

In the absence of an input signal, the LMH1297 automatically goes into Power Save mode to conserve power dissipation. When a valid signal is detected, the LMH1297 automatically exits Power Save mode and returns to the normal operation mode. If the ENABLE pin is pulled low, the LMH1297 is forced into Power-Down mode. In Power Save mode, both the carrier detect circuit and the serial interface remain active. In Power-Down mode, only the serial interface remains active.

Users can monitor the status of the carrier detect through register programming. This can be done either by configuring the LOCK_N pin to output the CD_N status or by monitoring the carrier detect status register.

Table 8-4. Input Carrier Detect Modes of Operation

ENABLE	EQ/CD_SEL	SIGNAL INPUT	OPERATING MODE
H	L	75-Ω video input at SDI_IO+	EQ mode, normal operation Carrier detector at SDI_IO+ Serial interface active OUT0 automatically enabled, regardless of OUT0_SEL setting
H	L	No signal at SDI_IO+	Power Save mode Carrier detector at SDI_IO+ Serial interface active
H	H	100-Ω signal input at IN0±	CD mode, normal operation Carrier detector at IN0± Serial interface active
H	H	No signal at IN0±	Power Save mode Carrier detector at IN0± Serial interface active
L	X	Input signal ignored	Power Down mode Forced device power down Serial interface active

Copyright © 2022 Texas Instruments Incorporated

8.3.4 –6-dB Splitter Mode Launch Amplitude for SDI_IO+ (EQ Mode Only)

When placed in EQ mode, the LMH1297 equalizes data transmitted into SDI_IO through a coaxial cable driven by a SMPTE compatible cable driver with launch amplitude of 800 mVp-p ± 10%. In applications where a 1:2 passive splitter is used, the signal amplitude is reduced by half due to the 6-dB insertion loss of the splitter. The LMH1297 can support –6-dB splitter mode for the SDI_IO input through register control. For more information, refer to the *LMH1297 Programming Guide*.

8.3.5 Continuous Time Linear Equalizer (CTLE)

The LMH1297 has two continuous time linear equalizer (CTLE) blocks, one for SDI_IO in EQ mode and another for IN0 in CD mode. The CTLE compensates for frequency-dependent loss due to the transmission media prior to the device input. The CTLE accomplishes this by applying variable gain to the input signal, thereby boosting higher frequencies more than lower frequencies. The CTLE block extends the signal bandwidth, restores the signal amplitude, and reduces ISI caused by the transmission medium.

8.3.5.1 Line-Side Adaptive Cable Equalizer (SDI_IO+ in EQ mode)

If the LMH1297 is placed in EQ mode (EQ/CD_SEL = L), adaptive cable equalization is enabled for SDI_IO. While the LMH1297 is in EQ mode, IN0 EQ is powered down.

SDI_IO has an on-chip 75-Ω termination to the input common-mode voltage and includes a series return loss compensation network for meeting stringent SMPTE return loss requirements (see Figure 7-8). The cable equalizer is designed with high gain and low noise circuitry to compensate for the insertion loss of a coaxial cable (such as Belden 1694A), which is widely used in broadcast video infrastructures.

8.3.5.2 Host-Side Adaptive PCB Trace Equalizer (IN0± in CD Mode)

If the LMH1297 is placed in CD mode (EQ/CD_SEL = H), then PCB trace equalization is enabled for IN0. While the LMH1297 is in CD mode, SDI_IO EQ is powered down.

IN0 has an on-chip 100-Ω termination and is designed for AC coupling, requiring a 4.7-µF, AC-coupling capacitor for minimizing base-line wander. The PCB equalizer can compensate up to 20 inches of board trace at data rates up to 11.88 Gbps. There are two adapt modes for IN0: AM0 manual mode and AM1 adaptive mode. In AM0 manual mode, fixed EQ boost settings are applied through user-programmable control. In AM1 adaptive mode, state machines automatically find the optimal EQ boost from a set of 16 predetermined settings defined in Registers 0x40-0x4F.

In CD mode, the HOST_EQ0 pin determines the IN0 adapt mode and EQ boost level. For normal operation, HOST_EQ0 = F is recommended. HOST_EQ0 pin logic settings are shown in Table 8-5. These HOST_EQ0 pin settings can be overridden by register control. For more information, refer to the *LMH1297 Programming Guide*.

Table 8-5. HOST_EQ0 Pin EQ Settings in CD mode (EQ/CD_SEL = H)

HOST_EQ0(1)	IN0± EQ BOOST(2)	RECOMMENDED BOARD TRACE IN0±(3)
H	All Rates: AM0 Manual mode, EQ=0x00	< 1 inch
F	**Normal Operation** 12G to 3G Rates: AM1 Adaptive mode 1.5G, 270M Rates: AM0 Manual mode, EQ= 0x00	0-20 inches
R	All Rates: AM0 Manual mode, EQ=0x80	10-15 inches
L	All Rates: AM0 Manual mode, EQ=0x90	20 inches

(1) The HOST_EQ0 pin is also used to set OUT0 VOD and de-emphasis values. See *Section 8.3.9.2* for more information.
(2) When the LMH1297 is in EQ mode, IN0 EQ settings are ignored, because IN0 EQ is powered down.
(3) Recommended board trace at 11.88 Gbps.

Copyright © 2022 Texas Instruments Incorporated

8.3.6 Clock and Data (CDR) Recovery

After the input signal passes through the CTLE, the equalized data is fed into the clock and data recovery (CDR) block. Using an internal PLL, the CDR locks to the incoming equalized data and recovers a clean internal clock to re-sample the equalized data. The LMH1297 CDR is able to tolerate high input jitter, tracking low-frequency input jitter below the PLL bandwidth while reducing high-frequency input jitter above the PLL bandwidth. The supported data rates are listed in Table 8-6.

Table 8-6. Supported Data Rates

INPUT	DATA RATE	RECLOCKER
SDI_IO+ (EQ mode), IN0± (CD mode)	11.88 Gbps, 5.94 Gbps, 2.97 Gbps, 1.485 Gbps, 270 Mbps(1)	Enable
	125 Mbps	Bypass

(1) The LMH1297 supports divide-by-1.001 lock rates for 11.88 Gbps, 5.94 Gbps, 2.97 Gbps, and 1.485 Gbps.

8.3.7 Internal Eye Opening Monitor (EOM)

The LMH1297 has an on-chip eye opening monitor (EOM) that can be used to analyze, monitor, and diagnose the post-equalized waveform, just prior to the CDR reclocker. The EOM is operational for 2.97 Gbps and higher data rates.

The EOM monitors the post-equalized waveform in a time window that spans one unit interval and a configurable voltage range that spans up to ±400 mV. The time window and voltage range are divided into 64 steps, so the result of the eye capture is a 64 × 64 matrix of hits, where each point represents a specific voltage and phase offset relative to the main data sampler. The number of hits registered at each point needs to be taken in context with the total number of bits observed at that voltage and phase offset to determine the corresponding probability for that point.

The resulting 64 × 64 matrix produced by the EOM can be processed by software and visualized in a number of ways. Figure 8-2 and Figure 8-3 show two common ways to visualize this data. These diagrams depict examples of eye monitor plots implemented by software. The first plot is an example using the EOM data to plot a basic eye using ASCII characters, which can be useful for diagnostic software. The second plot shows the first derivative of the EOM data, revealing the density of hits and the actual waveforms and crossings that comprise the eye.

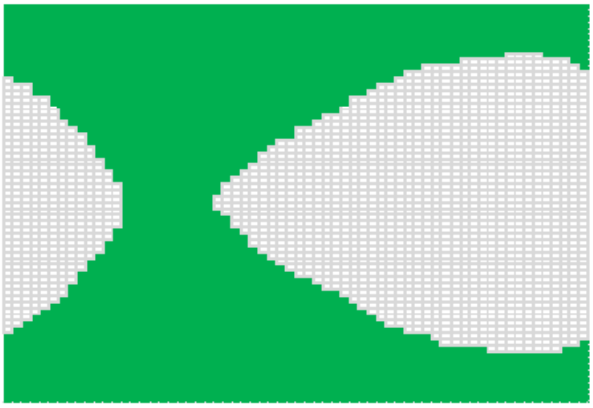

Figure 8-2. Internal Input Eye Monitor Plot

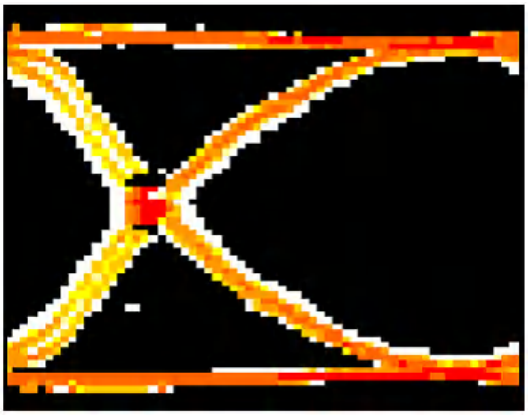

Figure 8-3. Internal Eye Monitor Hit Density Plot

A common measurement performed by the EOM is the horizontal and vertical eye opening. The horizontal eye opening (HEO) represents the width of the post-equalized eye at 0-V differential amplitude, measured in unit intervals or picoseconds (ps). The vertical eye opening (VEO) represents the height of the post-equalized eye, measured midway between the mean zero crossing of the eye. This position in time approximates the CDR sampling phase. HEO and VEO measurements can be read back through register control.

Copyright © 2022 Texas Instruments Incorporated

8.3.8 Output Function Control

The LMH1297 output function control for data routed to outputs SDI_IO (in CD mode), SDI_OUT, and OUT0 is configured by the OUT_CTRL pin. The OUT_CTRL pin determines whether to bypass the input equalizer, reclocker, or both. In normal operation (OUT_CTRL = F), both input equalizer and reclocker are enabled.

Table 8-7 lists the OUT_CTRL pin logic settings. These settings can be overridden through register control by applying the appropriate override bit values. For more information, refer to the *LMH1297 Programming Guide*.

Table 8-7. OUT_CTRL Settings for Bypass Modes

EQ/CD_SEL (MODE)	OUT_CTRL	SDI_IO+ CABLE EQUALIZER	IN0± PCB EQUALIZER	RECLOCKER	SUMMARY
L (EQ mode)	H	Bypass	N/A	Enable	Input SDI_IO cable equalizer bypassed Reclocker enabled
	F	Enable	N/A	Enable	Normal operation Input SDI_IO cable equalizer enabled Reclocker enabled
	R	Bypass	N/A	Bypass	Input SDI_IO cable equalizer bypassed Reclocker bypassed
	L	Enable	N/A	Bypass	Input SDI_IO cable equalizer enabled Reclocker bypassed
H (CD mode)	H, F	N/A	Enable	Enable	Normal operation Input IN0 equalizer enabled Reclocker enabled
	R, L	N/A	Enable	Bypass	Input IN0 equalizer enabled in AM0 manual mode. IN0 EQ settings configurable by HOST_EQ0 pin. Reclocker bypassed

8.3.9 Output Driver Control

8.3.9.1 Line-Side Output Cable Driver (SDI_IO+ in CD mode, SDI_OUT+ in EQ or CD mode)

The LMH1297 has two output cable driver (CD) blocks, one for SDI_IO in CD mode and another for SDI_OUT. These SDI outputs are designed to drive 75-Ω single-ended coaxial cables at data rates up to 11.88 Gbps. Both SDI_IO and SDI_OUT feature an integrated 75-Ω termination and return loss compensation network for meeting stringent SMPTE return loss requirements (see Figure 7-8).

8.3.9.1.1 Output Amplitude (VOD)

In CD mode (EQ/CD_SEL = H), SDI_IO is enabled as an SDI cable driver output. In either CD or EQ mode, SDI_OUT is an SDI cable driver output. In EQ mode, SDI_OUT serves as a loop-through output, and in CD mode, SDI_OUT serves as a secondary cable driver output.

SDI_IO (in CD mode) and SDI_OUT are designed for transmission across 75-Ω single-ended impedance. The nominal SDI cable driver output amplitude (VOD) is 800 mVp-p single-ended. In the presence of long output cable lengths or crosstalk, the SDI_VOD pin can be used to optimize the cable driver output with respect to the nominal amplitude. Table 8-8 details VOD settings that can be applied to both SDI_IO and SDI_OUT. The SDI_VOD pin can be overridden through register control. In addition, the nominal VOD amplitude can be changed by register control. For more information, refer to the *LMH1297 Programming Guide*.

Table 8-8. SDI_VOD Settings for Line-Side Output Amplitude

SDI_VOD	DESCRIPTION
H	about +5% of nominal
F	800 mVp-p (nominal)
R	about +10% of nominal
L	about –5% of nominal

Copyright © 2022 Texas Instruments Incorporated

8.3.9.1.2 Output Pre-Emphasis

In addition to SDI cable driver VOD control, the LMH1297 can add pre-emphasis on the cable driver output to improve output signal integrity when the reclocker recovers a UHD (12G, 6G) or HD (3G, 1.5G) input data rate. By default, the LMH1297 in CD mode automatically enables pre-emphasis to SDI_IO at UHD (12G, 6G) rates, and pre-emphasis is disabled at SDI_IO for all other data rates. To minimize the effects of crosstalk on SDI_IO in either EQ or CD mode, pre-emphasis is disabled by default at SDI_OUT for all data rates. When enabled, the amount of pre-emphasis applied to the cable driver outputs is determined by register control. If the reclocker is bypassed or if the user desires to disable automatic pre-emphasis, pre-emphasis can be enabled manually through register control. For more information, refer to the *LMH1297 Programming Guide*.

8.3.9.1.3 Output Slew Rate

SMPTE specifications require different output driver rise and fall times depending on the operating data rate. To meet these requirements, the output edge rate of SDI_IO and SDI_OUT is automatically programmed according to the signal recovered by the reclocker. Typical edge rates at the cable driver output are shown in Table 8-9.

Table 8-9. SDI_IO and SDI_OUT Output Edge Rate

DETECTED DATA RATE	CABLE DRIVER OUTPUT EDGE RATE (TYP)
11.88 Gbps	34 ps
5.94 Gbps	36 ps
2.97 Gbps	59 ps
1.485 Gbps	60 ps
270 Mbps	550 ps

If the reclocker is bypassed, users must program the desired edge rate manually through register control. For more information, refer to the *LMH1297 Programming Guide*.

8.3.9.1.4 Output Polarity Inversion

Polarity inversion is supported on both SDI_IO and SDI_OUT outputs through register control.

8.3.9.2 Host-Side 100-Ω Output Driver (OUT0± in EQ or CD mode)

OUT0 is a 100-Ω driver output. In EQ mode, OUT0 serves as a host-side output from the SDI_IO cable equalizer. In CD mode, OUT0 serves as a host-side loop-back output. OUT0 also supports polarity inversion.

Note

In EQ mode, OUT0 is enabled by default, regardless of the logic applied to the OUT0_SEL pin.

The driver offers users the capability to select higher output amplitude and de-emphasis levels for longer board trace that connects the drivers to their downstream receivers. Driver de-emphasis provides transmitter equalization to reduce the ISI caused by the board trace.

In EQ mode, the HOST_EQ0 pin determines the output amplitude (VOD) and de-emphasis levels applied to the OUT0 PCB driver. In CD mode, the VOD and de-emphasis levels for OUT0 are set by default to 570 mVp-p and –0.4 dB. These settings can be changed through register control if desired.

Table 8-10 details the OUT0 VOD and de-emphasis settings that can be applied. The HOST_EQ0 pin settings can be overridden by register control. When these parameters are controlled by registers, the VOD and de-emphasis levels can be programmed independently. For more information, refer to the *LMH1297 Programming Guide*.

Table 8-10. HOST_EQ0 Pin VOD and DEM Settings

EQ/CD_SEL (MODE)	HOST_EQ[1]	OUT0± VOD (mVp-p)	OUT0± DEM (dB)	RECOMMENDED BOARD TRACE AT OUT0±[2]
L (EQ mode)	H	400	0	< 1 inch
	F	570	–0.4	1-2 inches
	R	660	–2.1	4-5 inches
	L	830	–4.4	8-10 inches
H (CD mode)	X	570	–0.4	1-2 inches

(1) The HOST_EQ0 pin is also used to set the IN0 EQ values when the LMH1297 is in CD mode. See *Section 8.3.5.2* for more information.
(2) Recommended board trace at 11.88 Gbps.

8.3.10 Status Indicators and Interrupts

The LOCK_N pin is a 3.3-V tolerant, active-low, open-drain output. An external resistor to the logic supply is required. The LOCK_N pin can be configured to indicate reclocker lock, input carrier detect, or an interrupt event.

8.3.10.1 LOCK_N (Lock Indicator)

By default, LOCK_N is the reclocker lock indicator, and this pin asserts low when the LMH1297 achieves lock to a valid SMPTE data rate. The LOCK_N pin functionality can also be configured through register control to indicate CD_N (carrier detect) or INT_N (interrupt) events. For more information about how to reconfigure the LOCK_N pin functionality, refer to the *LMH1297 Programming Guide*.

8.3.10.2 CD_N (Carrier Detect)

The LOCK_N pin can be reconfigured through register control to indicate a CD_N (carrier detect) event. When configured as a CD_N output, the pin asserts low at the end of adaptation after a valid signal is detected by the carrier detect circuit of the selected input. Under register control, this pin can be reconfigured to indicate CD_N for SDI_IO (in EQ mode) or IN0 (in CD mode). For more information about how to configure the LOCK_N pin for CD_N functionality, refer to the *LMH1297 Programming Guide*.

8.3.10.3 INT_N (Interrupt)

The LOCK_N pin can be configured to indicate an INT_N (interrupt) event. When configured as an INT_N output, the pin asserts low when an interrupt occurs, according to the programmed interrupt masks. Seven separate masks can be programmed through register control as interrupt sources:

- If there is a loss of signal (LOS) event on SDI_IO in EQ mode (2 separate masks).
- If there is a loss of signal (LOS) event on IN0 in CD mode (2 separate masks).
- If HEO or VEO falls below a certain threshold after CDR is locked (1 mask).
- If a CDR Lock event has occurred (2 separate masks).

INT_N is a sticky bit, meaning that it will flag after an interrupt occurs and will not clear until read-back. Once the Interrupt Status Register is read, the INT_N pin will assert high again. For more information about how to configure the LOCK_N pin for INT_N functionality, refer to the *LMH1297 Programming Guide*.

8.3.11 Additional Programmability

The LMH1297 supports extended programmability through SPI or SMBus serial control interface. Such added programmability includes:

- Cable EQ Index (CEI)
- Digital $MUTE_{REF}$

8.3.11.1 Cable EQ Index (CEI)

The Cable EQ Index (CEI) indicates the cable EQ boost index used at SDI_IO+ in EQ mode. CEI is accessible through ConfigIO Page Reg 0x25[5:0]. The 6-bit setting ranges in decimal value from 0 to 55 (000000'b to 110111'b in binary), with higher values corresponding to larger gain applied at the SDI_IO+ input.

Copyright © 2022 Texas Instruments Incorporated

8.3.11.2 Digital $MUTE_{REF}$

Digital $MUTE_{REF}$ ConfigIO Page Reg 0x03[5:0] sets the threshold for the maximum cable length at SDI_IO+ to be equalized before muting the outputs. The $MUTE_{REF}$ register value is directly proportional to the cable length being equalized. $MUTE_{REF}$ is data rate dependent. Follow the steps below to set the $MUTE_{REF}$ register setting for any desired SDI rate:

1. Connect the desired input cable length at which the driver output needs to be muted.
2. Send video patterns to SDI_IO+ at the SD rate (270 Mbps). At SD, the Cable EQ Index (CEI) has the largest dynamic range.
3. Read back ConfigIO Page Reg 0x25[5:0] to record the CEI value.
4. Copy the CEI value, and write this value to Digital $MUTE_{REF}$ ConfigIO Page Reg 0x03[5:0].

8.4 Device Functional Modes

The LMH1297 operates in one of two modes: System Management Bus (SMBus) or Serial Peripheral Interface (SPI) mode. To determine the mode of operation, the proper setting must be applied to the MODE_SEL pin at power up, as detailed in Table 8-11.

Table 8-11. MODE_SEL Pin Settings

LEVEL	DESCRIPTION
H	Reserved for factory testing – do not use
F	Selects SPI Interface for register access
R	Reserved for factory testing – do not use
L	Selects SMBus Interface for register access

8.4.1 System Management Bus (SMBus) Mode

The SMBus interface can also be used to control the device. If MODE_SEL = Low (1 kΩ to VSS), Pins 13 and 29 are configured as SDA and SCL. Pins 11 and 28 are address straps ADDR0 and ADDR1 during power up. The maximum operating speed supported on the SMBUS pins is 400 kHz.

Table 8-12. SMBus Device Target Addresses(1)

ADDR0 (LEVEL)	ADDR1 (LEVEL)	7-BIT TARGET ADDRESS [HEX]	8-BIT WRITE COMMAND [HEX]
L	L	2D	5A
L	R	2E	5C
L	F	2F	5E
L	H	30	60
R	L	31	62
R	R	32	64
R	F	33	66
R	H	34	68
F	L	35	6A
F	R	36	6C
F	F	37	6E
F	H	38	70
H	L	39	72
H	R	3A	74
H	F	3B	76
H	H	3C	78

(1) The 8-bit write command consists of the 7-bit target address (Bits 7:1) with 0 appended to the LSB to indicate an SMBus write. For example, if the 7-bit target address is 0x2D (010 1101'b), the 8-bit write command is 0x5A (0101 1010'b).

8.4.1.1 SMBus Read and Write Transaction

SMBus is a two-wire serial interface through which various system component chips can communicate with the controller. Target devices are identified by having a unique device address. The two-wire serial interface consists of SCL and SDA signals. SCL is a clock output from the controller to all of the target devices on the bus. SDA is a bidirectional data signal between the controller and target devices. The LMH1297 SMBus SCL and SDA signals are open-drain and require external pullup resistors.

Start and Stop:

The controller generates Start and Stop patterns at the beginning and end of each transaction.

- Start: High-to-low transition (falling edge) of SDA while SCL is high.
- Start: High-to-low transition (falling edge) of SDA while SCL is high.

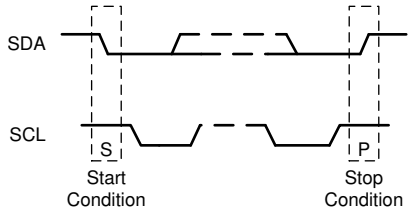

Figure 8-4. Start and Stop Conditions

The controller generates nine clock pulses for each byte transfer. The 9th clock pulse constitutes the ACK cycle. The transmitter releases SDA to allow the receiver to send the ACK signal. An ACK is recorded when the device pulls SDA low, while a NACK is recorded if the line remains high.

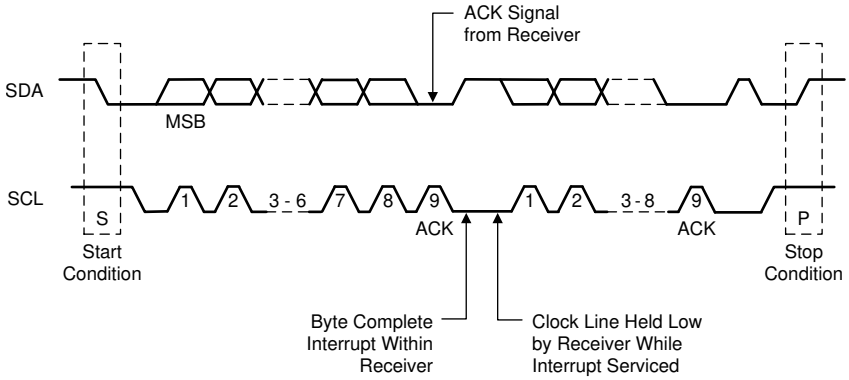

Figure 8-5. Acknowledge (ACK)

8.4.1.1.1 SMBus Write Operation Format

Writing data to a target device consists of three parts, as illustrated in Figure 8-6:

1. The controller begins with a start condition followed by the target device address with the R/ $\overline{W}$ bit set to 0'b.
2. After an ACK from the target device, the 8-bit register word address is written.
3. After an ACK from the target device, the 8-bit data is written, followed by a stop condition.

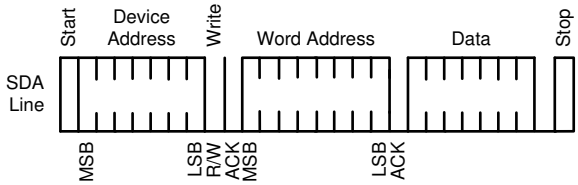

Figure 8-6. SMBus Write Operation

Copyright © 2022 Texas Instruments Incorporated

8.4.1.1.2 SMBus Read Operation Format

SMBus read operation consists of four parts, as illustrated in Figure 8-7:

1. The controller begins with a start condition, followed by the target device address with the R/ $\overline{W}$ bit set to 0'b.
2. After an ACK from the target device, the 8-bit register word address is written.
3. After an ACK from the target device, the controller initiates a restart condition, followed by the Target address with the R/ $\overline{W}$ bit set to 1'b.
4. After an ACK from the target device, the 8-bit data is read-back. The last ACK is high if there are no more bytes to read, and the last read is followed by a stop condition.

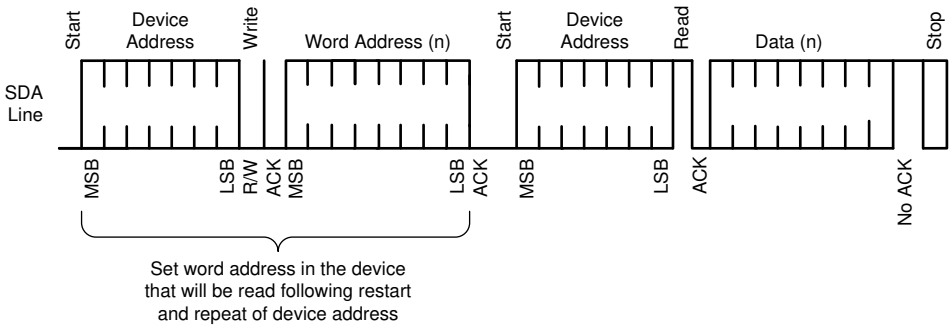

Figure 8-7. SMBus Read Operation

8.4.2 Serial Peripheral Interface (SPI) Mode

If MODE_SEL = F or H, the LMH1297 is in SPI mode. In SPI mode, the following pins are used for SPI bus communication:

- MOSI (Pin 13): Controller Output Target Input
- MISO (Pin 28): Controller Input Target Output
- SS_N (Pin 11): Target Select (Active Low)
- SCK (Pin 29): Serial Clock (Input to the LMH1297 target device)

8.4.2.1 SPI Read and Write Transactions

Each SPI transaction to a single device is 17 bits long and is framed by SS_N when asserted low. The MOSI input is ignored, and the MISO output is floated whenever SS_N is deasserted (high).

The bits are shifted in left-to-right. The first bit is R/ $\overline{W}$, which is 1'b for *read* and 0'b for *write*. Bits A7-A0 are the 8-bit register address, and bits D7-D0 are the 8-bit read or write data. The previous SPI command, address, and data are shifted out on MISO as the current command, address, and data are shifted in on MOSI. In all SPI transactions, the MISO output signal is enabled asynchronously when SS_N asserts low. The contents of a single MOSI or MISO transaction frame are shown in Figure 8-8.

Figure 8-8. 17-Bit Single SPI Transaction Frame

R/W	A7	A6	A5	A4	A3	A2	A1	A0	D7	D6	D5	D4	D3	D2	D1	D0

8.4.2.2 SPI Write Transaction Format

For SPI writes, the R/W bit is 0'b. SPI write transactions are 17 bits per device, and the command is executed on the rising edge of SS_N. The SPI transaction always starts on the rising edge of the clock.

The signal timing for a SPI Write transaction is shown in Figure 7-2. The *prime* values on MISO (for example, A7') reflect the contents of the shift register from the previous SPI transaction and are do not care for the current transaction.

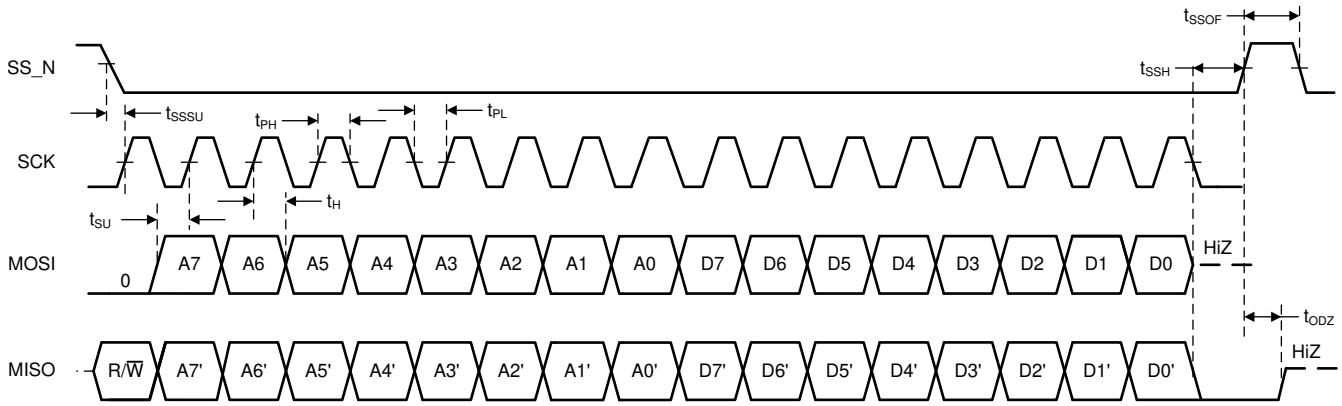

Figure 8-9. Signal Timing for a SPI Write Transaction

8.4.2.3 SPI Read Transaction Format

A SPI read transaction is 34 bits per device and consists of two 17-bit frames. The first 17-bit read transaction frame shifts in the address to be read, followed by a dummy transaction second frame to shift out 17-bit read data. The R/W bit is 1'b for the read transaction, as shown in Figure 7-3.

The first 17 bits from the read transaction specifies 1-bit of R/W and 8-bits of address A7-A0 in the first 8 bits. The eight 1's following the address are ignored. The second dummy transaction acts like a read operation on address 0xFF and needs to be ignored. However, the transaction is necessary to shift out the read data D7-D0 in the last 8 bits of the MISO output. As with the SPI Write, the *prime* values on MISO during the first 16 clocks are listed as do not care for this portion of the transaction. The values shifted out on MISO during the last 17 clocks reflect the read address and 8-bit read data for the current transaction.

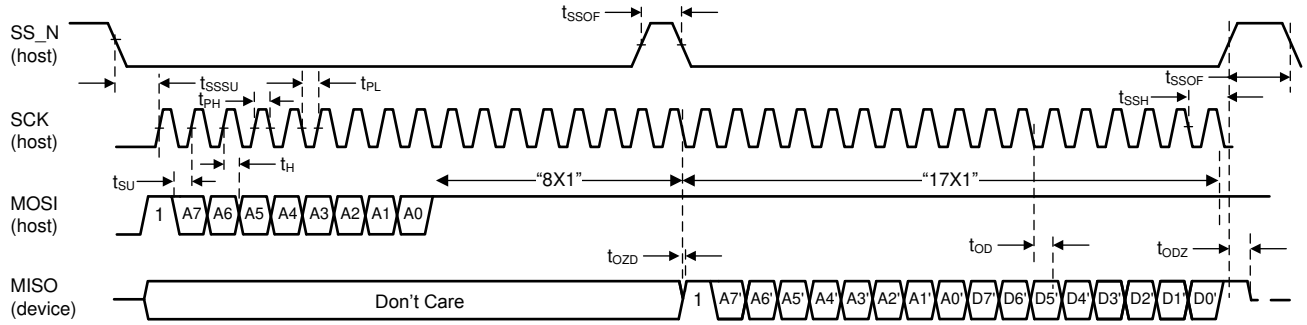

Figure 8-10. Signal Timing for a SPI Read Transaction

Copyright © 2022 Texas Instruments Incorporated

8.4.2.4 SPI Daisy Chain

The LMH1297 supports SPI daisy-chaining among multiple devices, as shown in Figure 8-11.

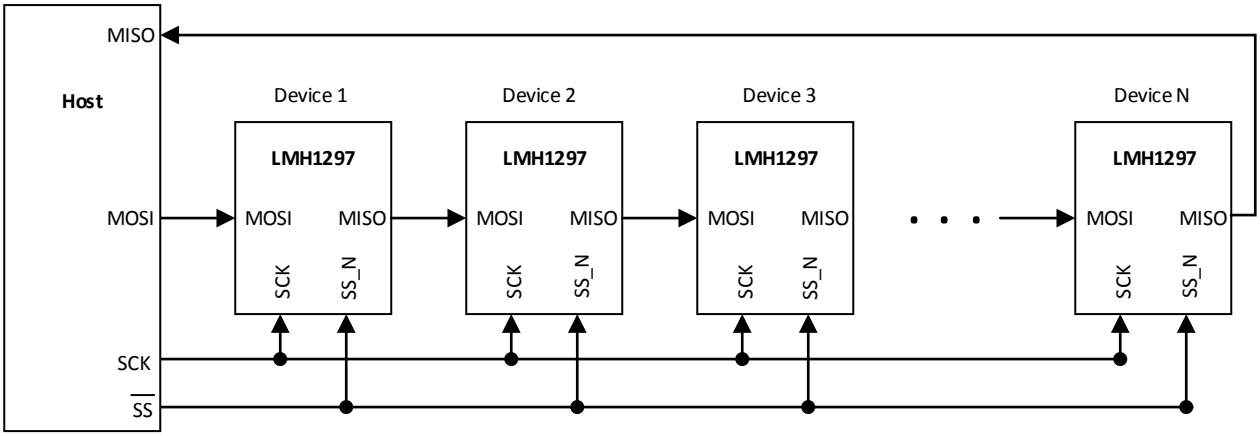

Figure 8-11. Daisy-Chain Configuration

Each LMH1297 device is directly connected to the SCK and SS_N pins of the host. The first LMH1297 device in the chain is connected to the host's MOSI pin, and the last device in the chain is connected to the host's MISO pin. The MOSI pin of each intermediate LMH1297 device in the chain is connected to the MISO pin of the previous LMH1297 device, thereby creating a serial shift register. In a daisy-chain configuration of N × LMH1297 devices, the host conceptually sees a shift register of length 17 × N for a basic SPI transaction, during which SS_N is asserted low for 17 × N clock cycles.

8.5 Register Maps

The LMH1297 register map is divided into three register pages. These register pages are used to control different aspects of the LMH1297 functionality. A brief summary of the pages is shown below:

1. **Share Register Page:** this page corresponds to global parameters, such as LMH1297 device ID, I/O direction override, and LOCK_N status configuration. This is the default page at start-up. Access this page by setting Reg 0xFF[2:0] = 000'b.
2. **CTLE/CDR Register Page:** this page corresponds to IN0 PCB CTLE, input and output mux settings, CDR settings, and output interrupt overrides. Access this page by setting Reg 0xFF[2:0] = 100'b.
3. **ConfigIO Register Page:** this page corresponds to SDI_IO Cable Equalizer settings. This page also controls the OUT0, SDI_IO, and SDI_OUT driver output settings. Access this page by setting Reg 0xFF[2:0] = 101'b.

For the complete register map, typical device configurations, and proper register reset sequencing, refer to the *LMH1297 Programming Guide*.

9 Application and Implementation

Note

Information in the following applications sections is not part of the TI component specification, and TI does not warrant its accuracy or completeness. TI's customers are responsible for determining suitability of components for their purposes, as well as validating and testing their design implementation to confirm system functionality.

9.1 Application Information

9.1.1 SMPTE Requirements and Specifications

SMPTE specifies several key requirements for the Serial Digital Interface to transport digital video over coaxial cables. Such requirements include return loss, AC coupling, and data rate dependency with rise and fall times.

1. **Return Loss:** this specification details how closely the port resembles 75-Ω impedance across a specified frequency band. The LMH1297 features a built-in 75-Ω return-loss network on SDI_IO and SDI_OUT to minimize parasitics and improve overall signal integrity.
2. **AC Coupling:** AC-coupling capacitors are required for transporting uncompressed serial data streams with heavy low-frequency content. The use of 4.7-µF, AC-coupling capacitors is recommended to avoid low-frequency DC wander.
3. **Rise/Fall Time:** output 75-Ω signals are required to meet certain rise and fall timing depending on the data rate. This improves the eye opening observed for the receiving device. The LMH1297 SDI_IO (in CD mode) and SDI_OUT cable drivers feature automatic edge rate adjustment to meet SMPTE rise and fall time requirements.

TI recommends placing the LMH1297 as close as possible to the 75-Ω BNC ports to meet SMPTE specifications.

9.1.2 Low-Power Optimization in CD Mode

In CD mode, the LMH1297 IN0 CTLE operates in either AM1 Adaptive mode or AM0 Manual mode. When operating in AM1, the LMH1297 uses HEO/VEO Lock Monitoring as a key parameter to achieve lock. HEO/VEO Lock Monitoring determines the CTLE boost setting that produces the best horizontal and vertical eye opening after the CTLE. Once AM1 adaptation is complete and the LMH1297 asserts CDR lock at the optimal IN0 CTLE setting, HEO/VEO Lock Monitoring is no longer required to maintain lock. Therefore, HEO/VEO Lock Monitoring can be disabled by setting CTLE/CDR Reg 0x3E[7] = 0'b **after** lock is declared. Disabling HEO/VEO Lock Monitoring optimizes power dissipation in CD mode, reducing the overall power by approximately 25 mW.

When operating in AM0, the LMH1297 does not use HEO/VEO Lock Monitoring, because the IN0 CTLE setting is set manually by the user. In AM0, HEO/VEO Lock Monitoring can be disabled at any time.

9.1.3 Optimized Loop Bandwidth Settings for Arria 10 FPGA Applications

The LMH1297 default loop bandwidth setting is optimized for a wide variety of applications. For applications using the Intel Arria 10 FPGA, further optimization of the loop bandwidth in CD mode may be required. Refer to the *LMH1297 Programming Guide* for detailed register settings when using the LMH1297 in CD mode with the Arria 10 FPGA.

Copyright © 2022 Texas Instruments Incorporated

9.2 Typical Applications

The LMH1297 is a bidirectional I/O with integrated reclocker that supports SDI data rates up to 11.88 Gbps. This device supports multiple configurations and can be programmed as a cable equalizer or cable driver. Figure 9-1 shows a typical application circuit for the LMH1297.

Specific examples of typical applications for the LMH1297 as a bidirectional I/O and cable equalizer with loop-through are detailed in the following subsections.

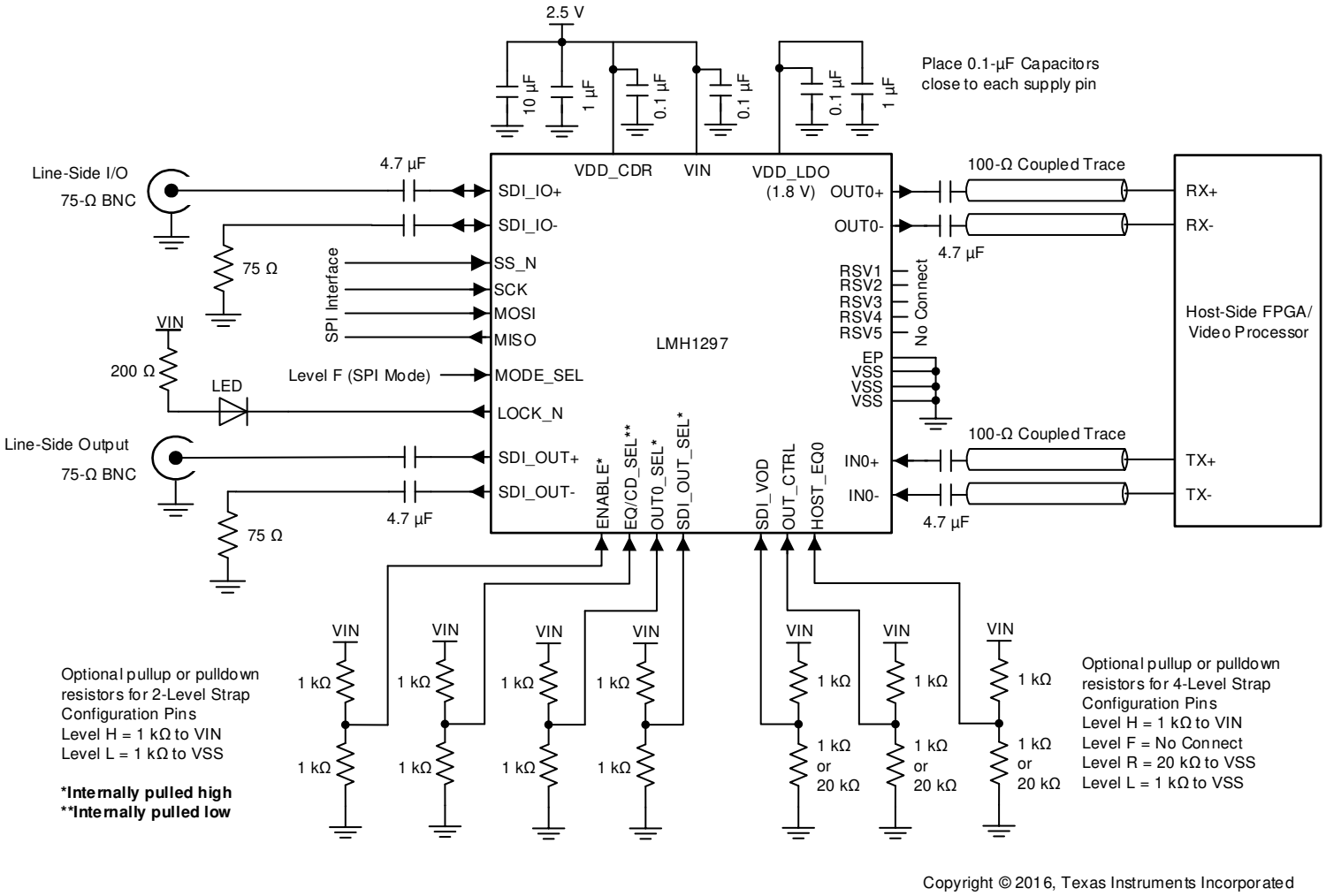

Copyright © 2016, Texas Instruments Incorporated

Figure 9-1. LMH1297 Typical Application Circuit

9.2.1 Bidirectional I/O

The LMH1297 can be configured as a bidirectional I/O to improve BNC port function flexibility. In EQ mode, the LMH1297 equalizes 75-Ω SDI input data at SDI_IO and outputs from OUT0 to an FPGA Rx. SDI_OUT is used as an optional loop-through SDI output. In CD mode, the LMH1297 equalizes 100-Ω SDI input data at IN0 and uses the dual cable drivers at SDI_IO and SDI_OUT to drive out the SDI signal. OUT0 can be used as a loop-back output for system monitoring.

Figure 9-2 shows a typical application where an LMH1297 is used alongside an SDI FPGA to enable bidirectional I/O port functionality.

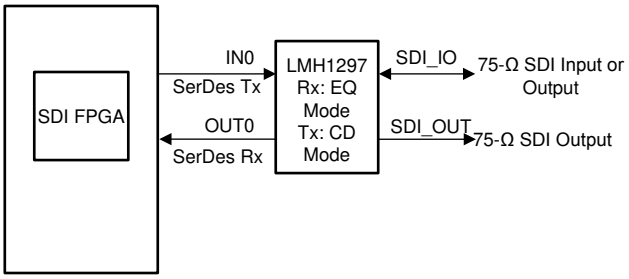

Copyright © 2016, Texas Instruments Incorporated

Figure 9-2. LMH1297 Bidirectional I/O Application

9.2.1.1 Design Requirements

For general LMH1297 design requirements, reference the guidelines in Table 9-1.

For bidirectional I/O application-specific requirements, reference the guidelines in Table 9-2.

Table 9-1. LMH1297 General Design Requirements

DESIGN PARAMETER	REQUIREMENTS
SDI_IO+, SDI_OUT+ AC-coupling capacitors	4.7-µF capacitors recommended
SDI_IO–, SDI_OUT– AC-coupling capacitors	4.7-µF capacitors recommended, AC terminated with 75 Ω to VSS.
IN0± and OUT0± AC-coupling capacitors	4.7-µF capacitors recommended
Input and Output Terminations	Input and output terminations provided internally. Do **not** add external terminations.
DC power supply decoupling capacitors	10-µF and 1-µF bulk capacitors; place close to each device. 0.1-µF capacitor; place close to each supply pin.
VDD_LDO decoupling capacitors	1-µF and 0.1-µF capacitors; place as close as possible to the device VDD_LDO pin.
MODE_SEL Pin	SPI: Leave MODE_SEL unconnected (Level F) SMBus: Connect 1 kΩ to VSS (Level L)
Input Reclocked Data Rate (SDI_IO in EQ mode or IN0 in CD mode)	11.88 Gbps, 5.94 Gbps, 2.97 Gbps, 1.485 Gbps, or Divide-by-1.001 sub-rates and 270 Mbps. For all other input data rates, the reclocker is automatically bypassed.

Table 9-2. LMH1297 Bidirectional I/O Requirements

DESIGN PARAMETER	REQUIREMENTS
EQ/CD_SEL Pin	1 kΩ to VSS (Level L) when SDI_IO is used as a cable EQ input 1 kΩ to VIN (Level H) when SDI_IO is used as a cable driver output
OUT0_SEL Pin	1 kΩ to VSS (Level L) to enable OUT0 for monitoring purposes 1 kΩ to VIN (Level H) to disable OUT0 (available only in CD mode)
SDI_OUT_SEL Pin	1 kΩ to VSS (Level L) to enable cable loop-through (EQ mode) or secondary cable output (CD mode) 1 kΩ to VIN (Level H) to disable cable loop-through (EQ mode) or secondary cable output (CD mode)

Copyright © 2022 Texas Instruments Incorporated

9.2.1.2 Detailed Design Procedure

The design procedure for bidirectional I/O applications is as follows:

1. Select a power supply that meets the DC and AC requirements in *Section 7.3*.
2. Choose a small 0402 surface mount ceramic capacitor for AC-coupling capacitors to maintain characteristic impedance.
3. Choose a high-quality, 75-Ω BNC connector that is capable of supporting 11.88-Gbps applications. Consult a BNC supplier regarding insertion loss, impedance specifications, and recommended footprint for meeting SMPTE return loss.
4. Follow detailed high-speed layout recommendations provided in *Section 11.1* to ensure optimal signal quality when interconnecting 75-Ω and 100-Ω signals to the LMH1297.
5. Determine whether SPI or SMBus communication is necessary. If the LMH1297 must be programmed with settings other than what is offered by pin control, users must use SPI or SMBus mode for additional programming.
6. Configure EQ/CD_SEL, OUT0_SEL, and SDI_OUT_SEL pins according to the desired default use case. In a bidirectional I/O application, the EQ/CD_SEL pin or register settings may be modified to switch between EQ mode and CD mode.
7. Configure the LMH1297 in EQ mode. Tune the HOST_EQ0 100-Ω driver control pin to equalize the PCB output trace following OUT0±. Use register control for more tuning options if necessary.
8. Configure the LMH1297 in CD mode. Tune the SDI_VOD output amplitude control pin for optimal signal quality depending on the cable length attached at SDI_IO+ and SDI_OUT+. Use register control for more tuning options if necessary.

9.2.1.3 Application Curves

Depending on operation in EQ or CD mode, the LMH1297 performance was measured with the test setups shown in Figure 9-3 and Figure 9-4.

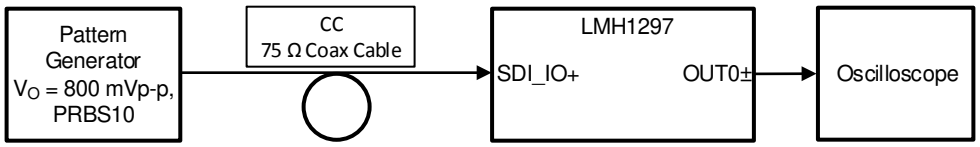

Figure 9-3. Test Setup for LMH1297 in EQ Mode

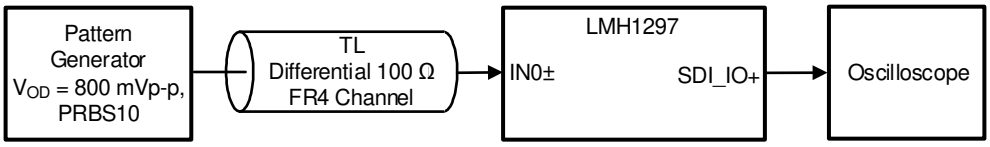

Figure 9-4. Test Setup for LMH1297 in CD Mode

The eye diagrams in this subsection show how the LMH1297 improves overall signal integrity in the data path for 75-Ω coax at SDI_IO+ when operating in EQ mode and 100-Ω differential FR4 PCB trace at IN0± when operating in CD mode.

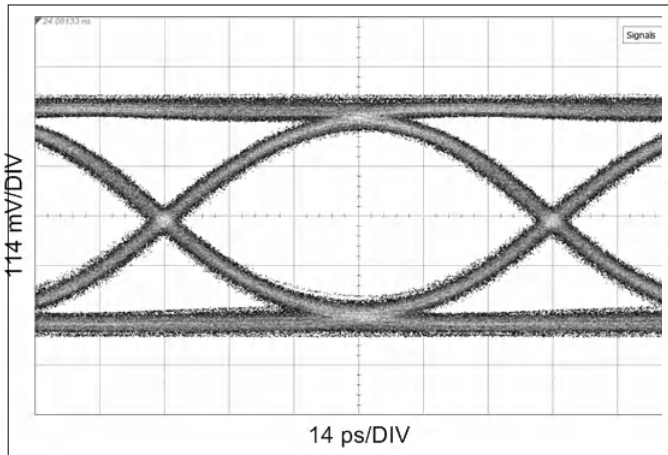

EQ mode, measured at OUT0± HOST_EQ0 = F, SDI_OUT_SEL = H, OUT_CTRL = F

Figure 9-5. 11.88 Gbps, CC = 75-m Belden 1694A, Reclocked

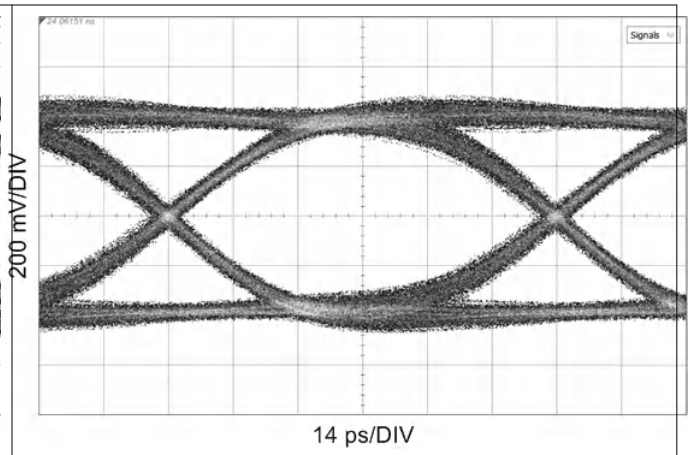

CD mode, measured at SDI_IO+ HOST_EQ0 = F, SDI_OUT_SEL = H, OUT_CTRL = F

Figure 9-6. 11.88 Gbps, TL = 20" FR4, Reclocked

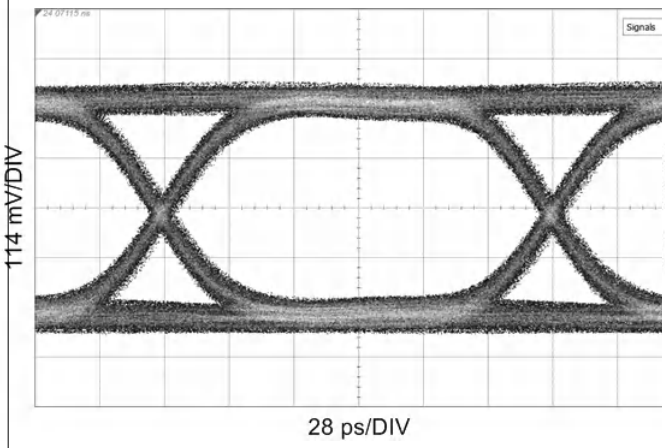

EQ mode, measured at OUT0± HOST_EQ0 = F, SDI_OUT_SEL = H, OUT_CTRL = F

Figure 9-7. 5.94 Gbps, CC = 120-m Belden 1694A, Reclocked

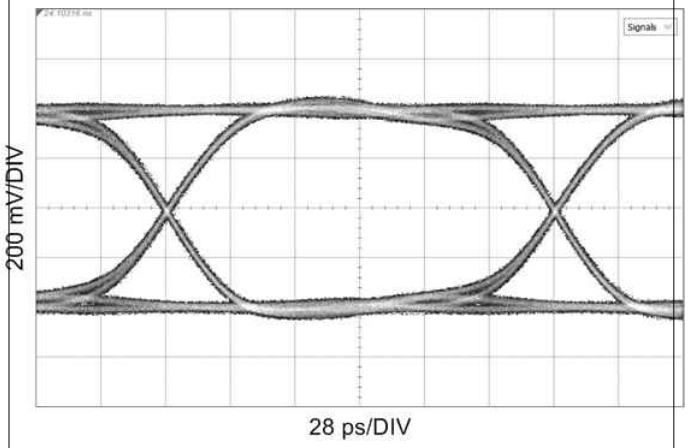

CD mode, measured at SDI_IO+ HOST_EQ0 = F, SDI_OUT_SEL = H, OUT_CTRL = F

Figure 9-8. 5.94 Gbps, TL = 20" FR4, Reclocked

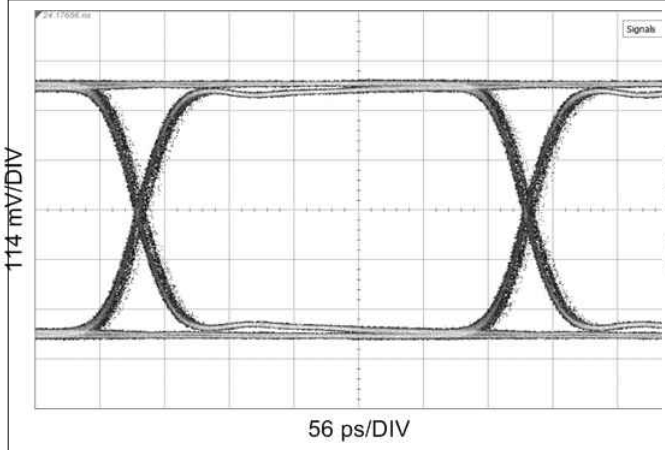

EQ mode, measured at OUT0± HOST_EQ0 = F, SDI_OUT_SEL = H, OUT_CTRL = F

Figure 9-9. 2.97 Gbps, CC = 200-m Belden 1694A, Reclocked

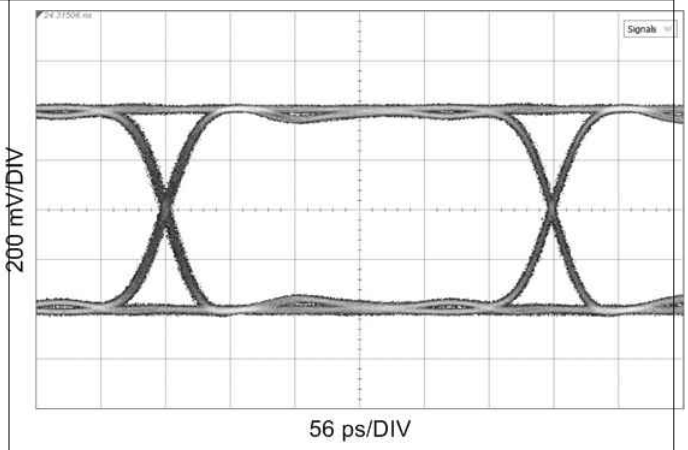

CD mode, measured at SDI_IO+ HOST_EQ0 = F, SDI_OUT_SEL = H, OUT_CTRL = F

Figure 9-10. 2.97 Gbps, TL = 20" FR4, Reclocked

Copyright © 2022 Texas Instruments Incorporated

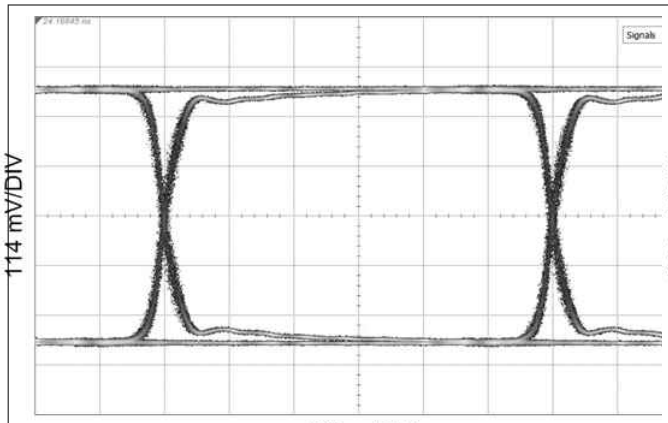

EQ mode, measured at OUT0± HOST_EQ0 = F, SDI_OUT_SEL = H, OUT_CTRL = F

Figure 9-11. 1.485 Gbps, CC = 300-m Belden 1694A, Reclocked

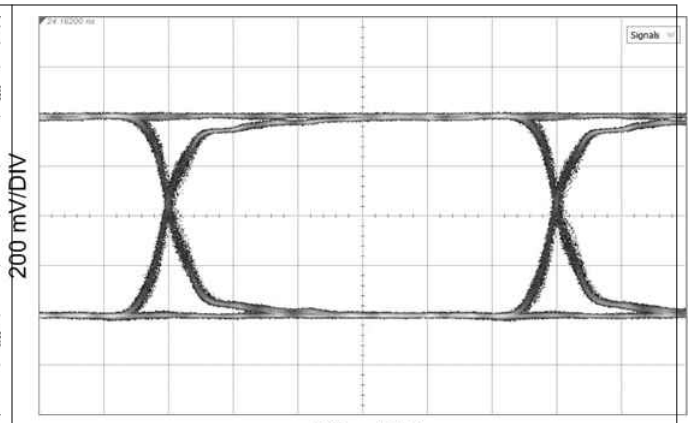

CD mode, measured at SDI_IO+ HOST_EQ0 = F, SDI_OUT_SEL = H, OUT_CTRL = F

Figure 9-12. 1.485 Gbps, TL = 20" FR4, Reclocked

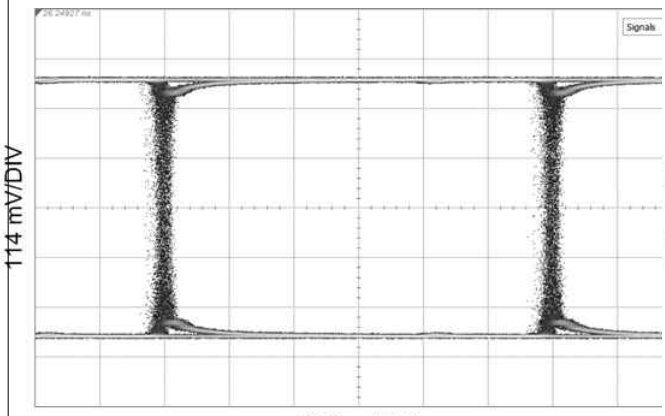

EQ mode, measured at OUT0± HOST_EQ0 = F, SDI_OUT_SEL = H, OUT_CTRL = F

Figure 9-13. 270 Mbps, CC = 600-m Belden 1694A, Reclocked

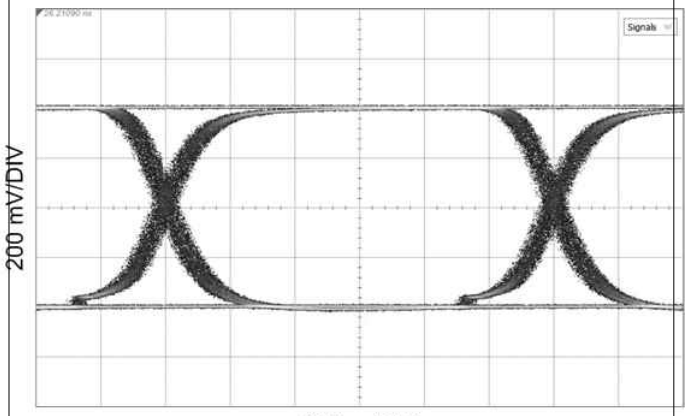

CD mode, measured at SDI_IO+ HOST_EQ0 = F, SDI_OUT_SEL = H, OUT_CTRL = F

Figure 9-14. 270 Mbps, TL = 20" FR4, Reclocked

9.2.2 Cable Equalizer With Loop-Through

The LMH1297 can be configured as a cable equalizer with loop-through output. In EQ mode, the LMH1297 takes in SDI data at the SDI_IO adaptive cable equalizer input and outputs the reclocked SDI signal at OUT0. Meanwhile, a redundant reclocked loop-through SDI signal is output on SDI_OUT for system monitoring purposes.

Figure 9-15 shows a typical application of an LMH1297 as a cable loop-through device. In this example, the LMH1297 provides an SDI input to the SDI FPGA. Concurrently, the equalized and reclocked SDI_IO signal is sent to the loop-through SDI_OUT cable driver output. Meanwhile, the FPGA sends post-processed SDI data out on an LMH1218 cable driver with integrated reclocker.

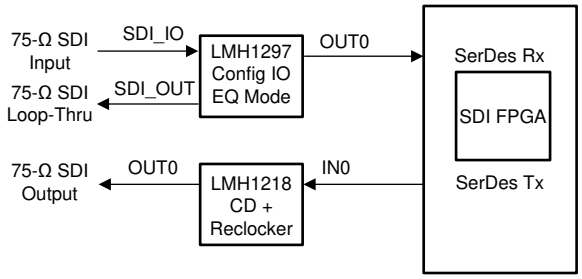

Copyright © 2016, Texas Instruments Incorporated

Figure 9-15. LMH1297 Cable Loop-Through Application

9.2.2.1 Design Requirements

See Table 9-1 in *Bidirectional I/O Design Requirements* for general LMH1297 design requirements.

For cable equalizer with loop-through application-specific requirements, reference the guidelines in Table 9-3.

Table 9-3. LMH1297 Cable Loop-Through Requirements

DESIGN PARAMETER	REQUIREMENTS
EQ/CD_SEL Pin	1 kΩ to VSS (Level L) to enable SDI_IO as a cable EQ input
OUT0_SEL Pin	1 kΩ to VSS (Level L) to enable OUT0 as PCB output to the FPGA
SDI_OUT_SEL Pin	1 kΩ to VSS (Level L) to enable SDI_OUT as a loop-through output

9.2.2.2 Detailed Design Procedure

See *Bidirectional I/O Detailed Design Procedure* and follow Steps 1-5. Refer to additional steps below for cable equalizer with loop-through applications.

1. Configure EQ/CD_SEL and SDI_OUT_SEL pins according to the desired default use case. In a cable loop-through application, the EQ/CD_SEL pin must be set to Level L so that the LMH1297 operates in EQ mode. Also note that in EQ mode, OUT0 is always enabled, regardless of the logic applied to OUT0_SEL.
2. Tune the HOST_EQ0 100-Ω driver control pin to equalize the PCB output trace following OUT0±. Use register control for more tuning options if necessary.

9.2.2.3 Application Curves

In EQ mode, the LMH1297 SDI_OUT performance was measured with the test setup shown in Figure 9-16.

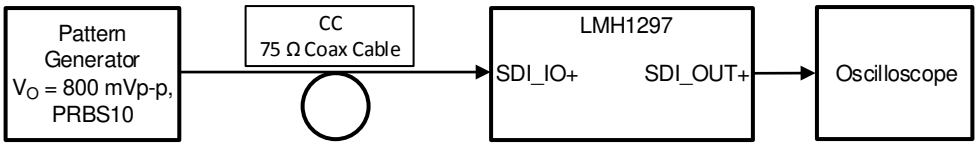

Figure 9-16. Test Setup for LMH1297 Loop-Through in EQ Mode

The eye diagrams in this subsection show the LMH1297 75-Ω loop-through output at SDI_OUT+.

Copyright © 2022 Texas Instruments Incorporated

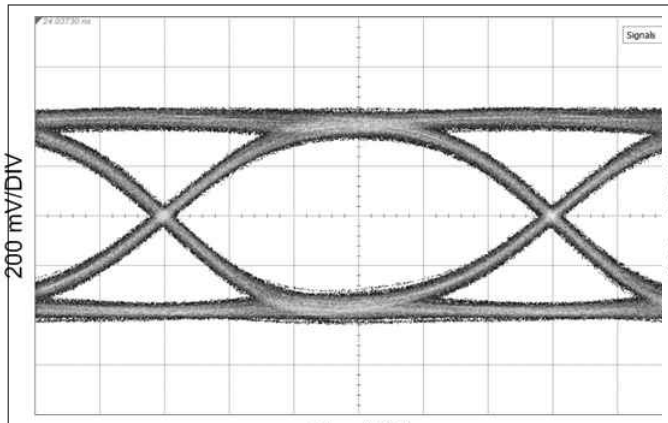

EQ mode, measured at SDI_OUT+ HOST_EQ0 = F, SDI_OUT_SEL = L, OUT_CTRL = F

Figure 9-17. 11.88 Gbps, CC = 65-m Belden 1694A, Reclocked

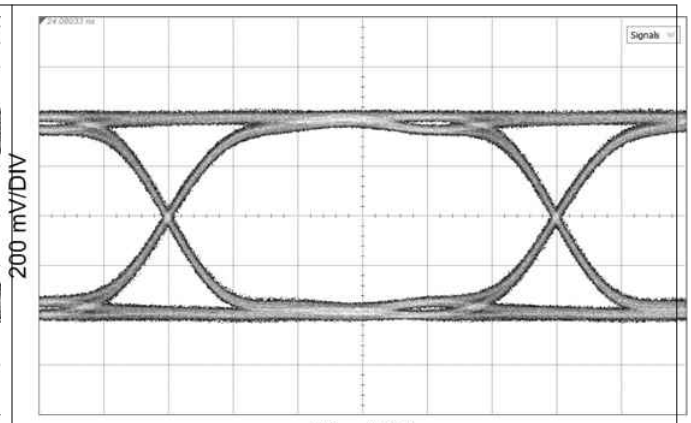

EQ mode, measured at SDI_OUT+ HOST_EQ0 = F, SDI_OUT_SEL = L, OUT_CTRL = F

Figure 9-18. 5.94 Gbps, CC = 120-m Belden 1694A, Reclocked

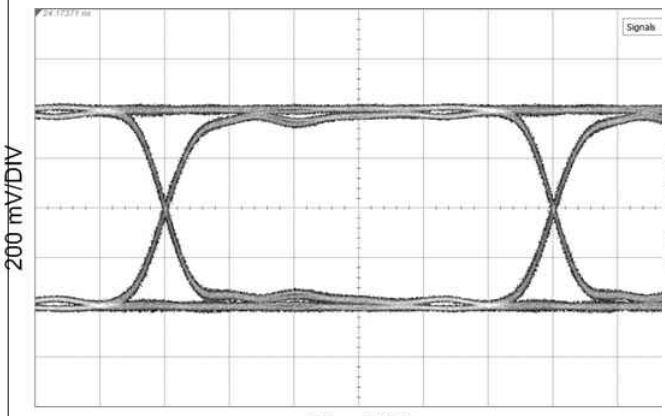

EQ mode, measured at SDI_OUT+ HOST_EQ0 = F, SDI_OUT_SEL = L, OUT_CTRL = F

Figure 9-19. 2.97 Gbps, CC = 200-m Belden 1694A, Reclocked

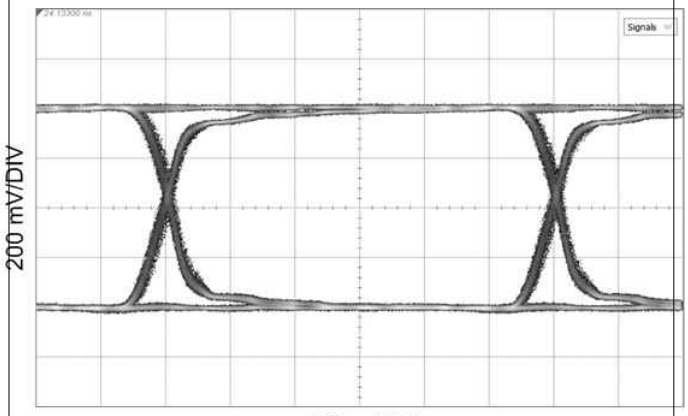

EQ mode, measured at SDI_OUT+ HOST_EQ0 = F, SDI_OUT_SEL = L, OUT_CTRL = F

Figure 9-20. 1.485 Gbps, CC = 280-m Belden 1694A, Reclocked

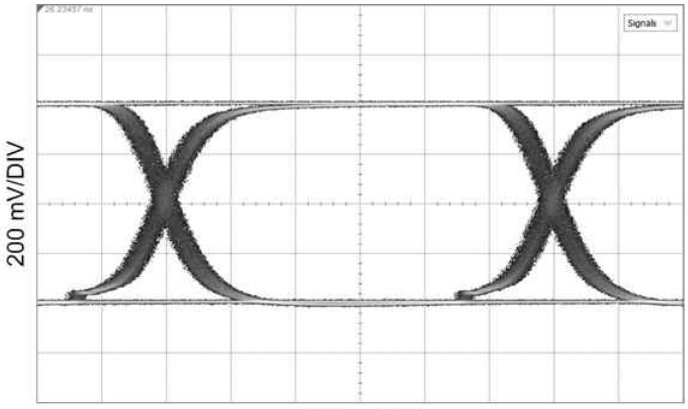

EQ mode, measured at SDI_OUT+ HOST_EQ0 = F, SDI_OUT_SEL = L, OUT_CTRL = F

Figure 9-21. 270 Mbps, CC = 600-m Belden 1694A, Reclocked

10 Power Supply Recommendations

The LMH1297 requires decoupling capacitors to ensure a stable power supply. For power supply decoupling, 0.1-µF surface-mount ceramic capacitors must be placed close to each VDD_CDR, VDD_LDO, and VIN supply pin to VSS. Larger bulk capacitors (for example, 10 µF and 1 µF) are recommended for VDD_CDR and VIN.

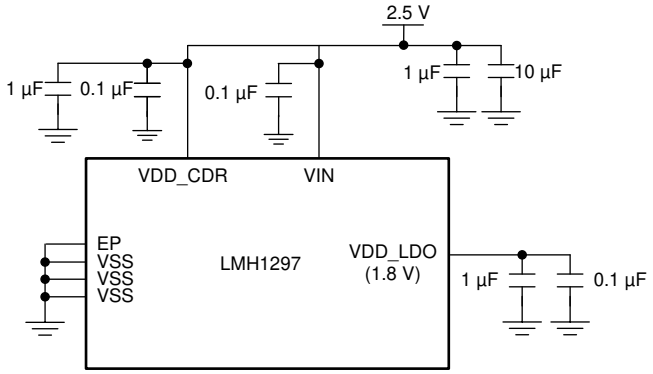

Copyright © 2016, Texas Instruments Incorporated

Figure 10-1. Recommended Power Supply Decoupling

Good supply bypassing requires low inductance capacitors. This can be achieved through an array of multiple small body size surface-mount bypass capacitors to keep low supply impedance. Better results can be achieved through the use of a buried capacitor formed by a VDD and VSS plane separated by 2-4 mil dielectric in a printed-circuit board.

Copyright © 2022 Texas Instruments Incorporated

11 Layout

11.1 Layout Guidelines

The following guidelines are recommended to optimize the board layout for the LMH1297.

11.1.1 Board Stack-Up and Ground References

- Choose a suitable board stack-up that supports 75-Ω single-ended trace and 100-Ω differential trace routing on the top layer of the board. This is typically done with a Layer 2 ground plane reference for the 100-Ω differential traces and a Layer 3 ground plane reference for the 75-Ω single-end traces.
- Maintain a distance of at least 5 times the trace width between signal trace and ground reference if they are on the same layer. This prevents unwanted changes in the characteristic impedance.
- Maintain a consistent ground plane reference for each high-speed trace from source to endpoint. Ground reference discontinuities lead to characteristic impedance mismatch.

11.1.2 High-Speed PCB Trace Routing and Coupling

Observe the following general high-speed recommendations for high-speed trace routing:

- For differential pairs, maintain a uniform width and gap for each differential pair where possible. When traces must diverge (for example, due to AC-coupling capacitors), ensure that the traces branch out or merge uniformly.
- To prevent reflections due to trace routing, ensure that trace bends are at most 45°. Right angle bends should be implemented with at least two 45° corners. Radial bends are ideal.
- Avoid using signal vias. If signal vias must be used, a return path (GND) via must be placed near the signal via to provide a consistent ground reference and minimize impedance discontinuities.
- Avoid via stubs by back-drilling as necessary.

11.1.2.1 SDI_IO± and SDI_OUT±:

- Use an uncoupled trace with 75-Ω single-ended impedance for signal routing to SDI_IO± and SDI_OUT±.
- The trace width is typically 8-10 mils with reference to a Layer-3 ground plane.

11.1.2.2 IN0± and OUT0±:

- Use coupled traces with 100-Ω differential impedance for signal routing to IN0± and OUT0±.
- The trace width is typically 5-8 mils with reference to a Layer-2 ground plane.

11.1.3 Anti-Pads

- Place anti-pads (ground relief) on the power and ground planes directly under the 4.7-µF, AC-coupling capacitor and IC landing pads to minimize parasitic capacitance. The size of the anti-pad and the number of layers to use the anti-pad depend on the board stack-up and can be determined by a 3-dimension electromagnetic simulation tool.

11.1.4 BNC Connector Layout and Routing

- Use a well-designed BNC footprint to ensure the BNC's signal landing pad achieves 75-Ω characteristic impedance. BNC suppliers usually provide recommendations on BNC footprint for best results.
- Keep trace length short between the BNC and SDI_IO±. The trace routing for SDI_IO+ and SDI_IO– should be as symmetrical as possible, with approximately equal lengths and equal loading. The same is true for SDI_OUT+ and SDI_OUT–.

11.1.5 Power Supply and Ground Connections

- Connect each supply pin (VDD_CDR, VIN, VDD_LDO) directly to the power or ground planes with a short via. The via is usually placed tangent to the supply pins' landing pads with the shortest trace possible.
- Power supply decoupling capacitors should be a small physical size (0402 or smaller) and placed close to the supply pins to minimize inductance. The capacitors are commonly placed on the bottom layer and share the ground of the EP (Exposed Pad).

Copyright © 2022 Texas Instruments Incorporated

11.1.6 Footprint Recommendations

- Stencil parameters for the EP (Exposed Pad) such as aperture area ratio and the fabrication process have a significant impact on paste deposition. Inspection of the stencil prior to placement of the QFN package is highly recommended to improve board assembly yields. If the via and aperture openings are not carefully monitored, the solder may flow unevenly through the EP. Stencil parameters for aperture opening and via locations are shown in the RTV package drawing in *Section 13*.
- The EP of the package must be connected to the ground plane through a 3 × 3 via array. These vias are solder-masked to avoid solder flowing into the plated-through holes during the board manufacturing process. Details about via dimensions are also shown in the RTV package drawing in *Section 13*.

More information on the QFN style package is provided in *QFN/SON PCB Attachment Application Report*.

Copyright © 2022 Texas Instruments Incorporated

11.2 Layout Example

The example shown in Figure 11-1 demonstrates the LMH1297 layout guidelines highlighted in *Section 11.1*.

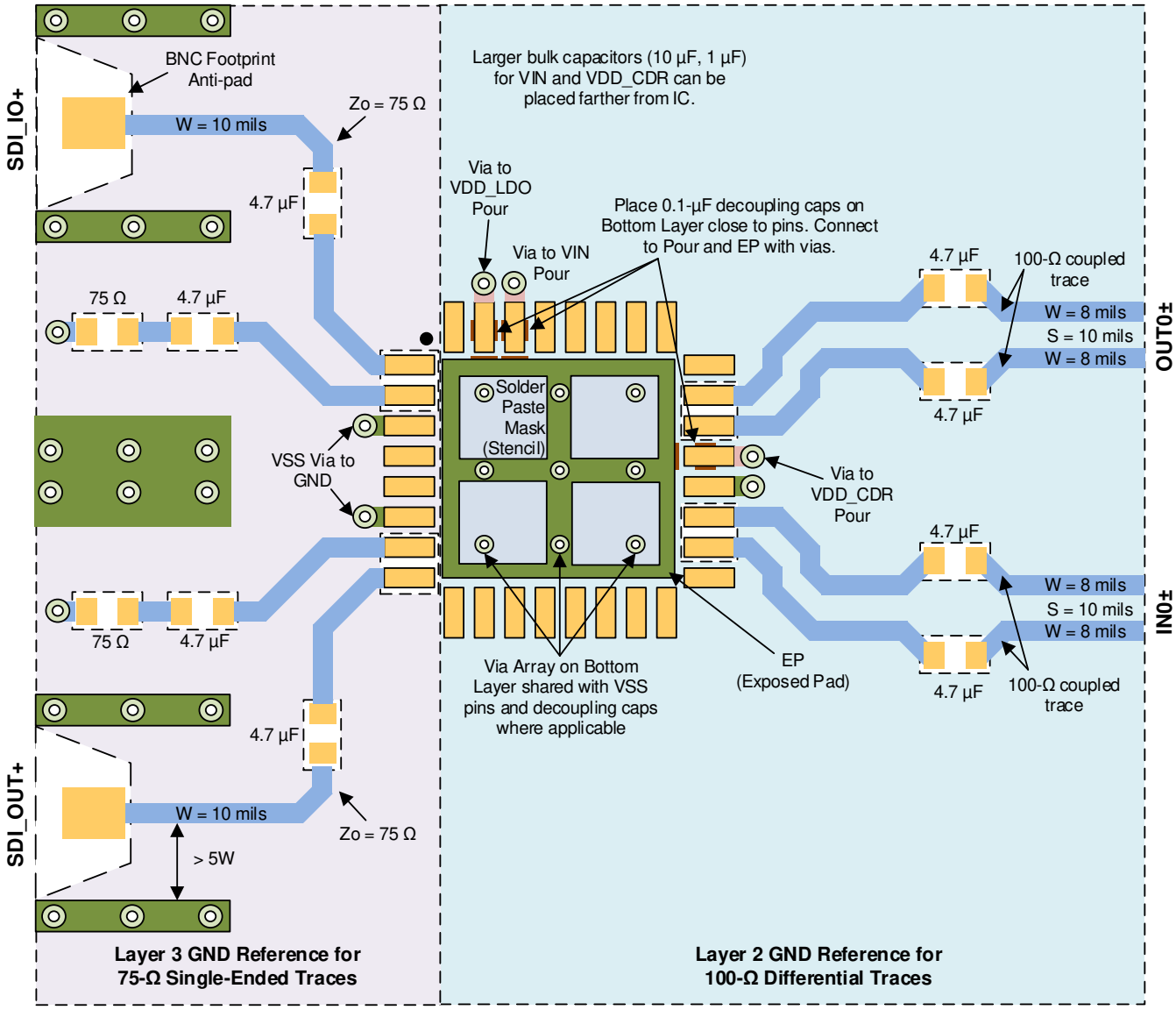

Note: All high speed signal traces are assumed to be on Layer 1 (Top Layer).

Figure 11-1. LMH1297 High-Speed Trace Layout Example

12 Device and Documentation Support

12.1 Documentation Support

12.1.1 Related Documentation

For related documentation, see the following:

- Texas Instruments, *Absolute Maximum Ratings for Soldering*
- Texas Instruments, *LMH1297 Programming Guide*
- Texas Instruments, *QFN/SON PCB Attachment Application Report*

12.2 Receiving Notification of Documentation Updates

To receive notification of documentation updates, navigate to the device product folder on ti.com. Click on *Subscribe to updates* to register and receive a weekly digest of any product information that has changed. For change details, review the revision history included in any revised document.

12.3 Support Resources

TI E2E™ support forums are an engineer's go-to source for fast, verified answers and design help — straight from the experts. Search existing answers or ask your own question to get the quick design help you need.

Linked content is provided "AS IS" by the respective contributors. They do not constitute TI specifications and do not necessarily reflect TI's views; see TI's Terms of Use.

12.4 Trademarks

TI E2E™ is a trademark of Texas Instruments.
All trademarks are the property of their respective owners.

12.5 Electrostatic Discharge Caution

This integrated circuit can be damaged by ESD. Texas Instruments recommends that all integrated circuits be handled with appropriate precautions. Failure to observe proper handling and installation procedures can cause damage.

ESD damage can range from subtle performance degradation to complete device failure. Precision integrated circuits may be more susceptible to damage because very small parametric changes could cause the device not to meet its published specifications.

12.6 Glossary

TI Glossary	This glossary lists and explains terms, acronyms, and definitions.

13 Mechanical, Packaging, and Orderable Information

The following pages include mechanical, packaging, and orderable information. This information is the most current data available for the designated devices. This data is subject to change without notice and revision of this document. For browser-based versions of this data sheet, refer to the left-hand navigation.

Copyright © 2022 Texas Instruments Incorporated

PACKAGING INFORMATION

Orderable part number	Status (1)	Material type (2)	Package | Pins	Package qty | Carrier	RoHS (3)	Lead finish/ Ball material (4)	MSL rating/ Peak reflow (5)	Op temp (°C)	Part marking (6)
LMH1297RTVR	Active	Production	WQFN (RTV) | 32	1000 | LARGE T&R	Yes	NIPDAU	Level-1-260C-UNLIM	-40 to 85	L1297
LMH1297RTVR.A	Active	Production	WQFN (RTV) | 32	1000 | LARGE T&R	Yes	NIPDAU	Level-1-260C-UNLIM	-40 to 85	L1297
LMH1297RTVR.B	Active	Production	WQFN (RTV) | 32	1000 | LARGE T&R	Yes	NIPDAU	Level-1-260C-UNLIM	-40 to 85	L1297
LMH1297RTVT	Active	Production	WQFN (RTV) | 32	250 | SMALL T&R	Yes	NIPDAU	Level-1-260C-UNLIM	-40 to 85	L1297
LMH1297RTVT.A	Active	Production	WQFN (RTV) | 32	250 | SMALL T&R	Yes	NIPDAU	Level-1-260C-UNLIM	-40 to 85	L1297
LMH1297RTVT.B	Active	Production	WQFN (RTV) | 32	250 | SMALL T&R	Yes	NIPDAU	Level-1-260C-UNLIM	-40 to 85	L1297
LMH1297RTVTG4	Active	Production	WQFN (RTV) | 32	250 | SMALL T&R	Yes	NIPDAU	Level-1-260C-UNLIM	-40 to 85	L1297
LMH1297RTVTG4.A	Active	Production	WQFN (RTV) | 32	250 | SMALL T&R	Yes	NIPDAU	Level-1-260C-UNLIM	-40 to 85	L1297
LMH1297RTVTG4.B	Active	Production	WQFN (RTV) | 32	250 | SMALL T&R	Yes	NIPDAU	Level-1-260C-UNLIM	-40 to 85	L1297

(1) **Status:** For more details on status, see our product life cycle.

(2) **Material type:** When designated, preproduction parts are prototypes/experimental devices, and are not yet approved or released for full production. Testing and final process, including without limitation quality assurance, reliability performance testing, and/or process qualification, may not yet be complete, and this item is subject to further changes or possible discontinuation. If available for ordering, purchases will be subject to an additional waiver at checkout, and are intended for early internal evaluation purposes only. These items are sold without warranties of any kind.

(3) **RoHS values:** Yes, No, RoHS Exempt. See the TI RoHS Statement for additional information and value definition.

(4) **Lead finish/Ball material:** Parts may have multiple material finish options. Finish options are separated by a vertical ruled line. Lead finish/Ball material values may wrap to two lines if the finish value exceeds the maximum column width.

(5) **MSL rating/Peak reflow:** The moisture sensitivity level ratings and peak solder (reflow) temperatures. In the event that a part has multiple moisture sensitivity ratings, only the lowest level per JEDEC standards is shown. Refer to the shipping label for the actual reflow temperature that will be used to mount the part to the printed circuit board.

(6) **Part marking:** There may be an additional marking, which relates to the logo, the lot trace code information, or the environmental category of the part.

Multiple part markings will be inside parentheses. Only one part marking contained in parentheses and separated by a "~" will appear on a part. If a line is indented then it is a continuation of the previous line and the two combined represent the entire part marking for that device.

Important Information and Disclaimer: The information provided on this page represents TI's knowledge and belief as of the date that it is provided. TI bases its knowledge and belief on information provided by third parties, and makes no representation or warranty as to the accuracy of such information. Efforts are underway to better integrate information from third parties. TI has taken and continues to take reasonable steps to provide representative

and accurate information but may not have conducted destructive testing or chemical analysis on incoming materials and chemicals. TI and TI suppliers consider certain information to be proprietary, and thus CAS numbers and other limited information may not be available for release.

In no event shall TI's liability arising out of such information exceed the total purchase price of the TI part(s) at issue in this document sold by TI to Customer on an annual basis.

TAPE AND REEL INFORMATION

REEL DIMENSIONS

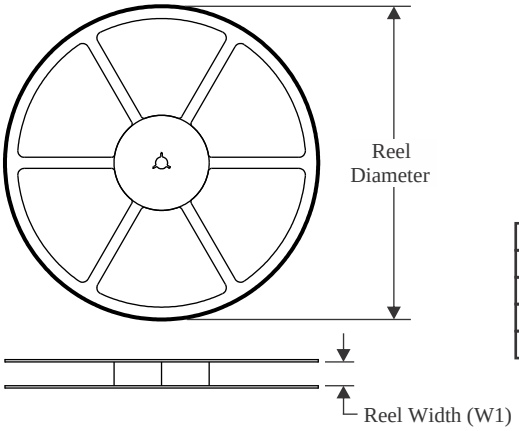

TAPE DIMENSIONS

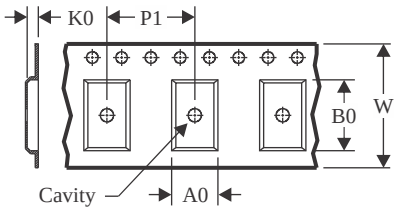

A0	Dimension designed to accommodate the component width
B0	Dimension designed to accommodate the component length
K0	Dimension designed to accommodate the component thickness
W	Overall width of the carrier tape
P1	Pitch between successive cavity centers

QUADRANT ASSIGNMENTS FOR PIN 1 ORIENTATION IN TAPE

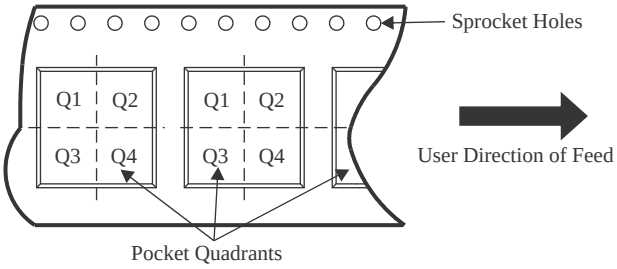

*All dimensions are nominal

Device	Package Type	Package Drawing	Pins	SPQ	Reel Diameter (mm)	Reel Width W1 (mm)	A0 (mm)	B0 (mm)	K0 (mm)	P1 (mm)	W (mm)	Pin1 Quadrant
LMH1297RTVR	WQFN	RTV	32	1000	180.0	12.4	5.3	5.3	1.1	8.0	12.0	Q2
LMH1297RTVT	WQFN	RTV	32	250	180.0	12.4	5.3	5.3	1.1	8.0	12.0	Q2
LMH1297RTVTG4	WQFN	RTV	32	250	180.0	12.4	5.3	5.3	1.1	8.0	12.0	Q2

TAPE AND REEL BOX DIMENSIONS

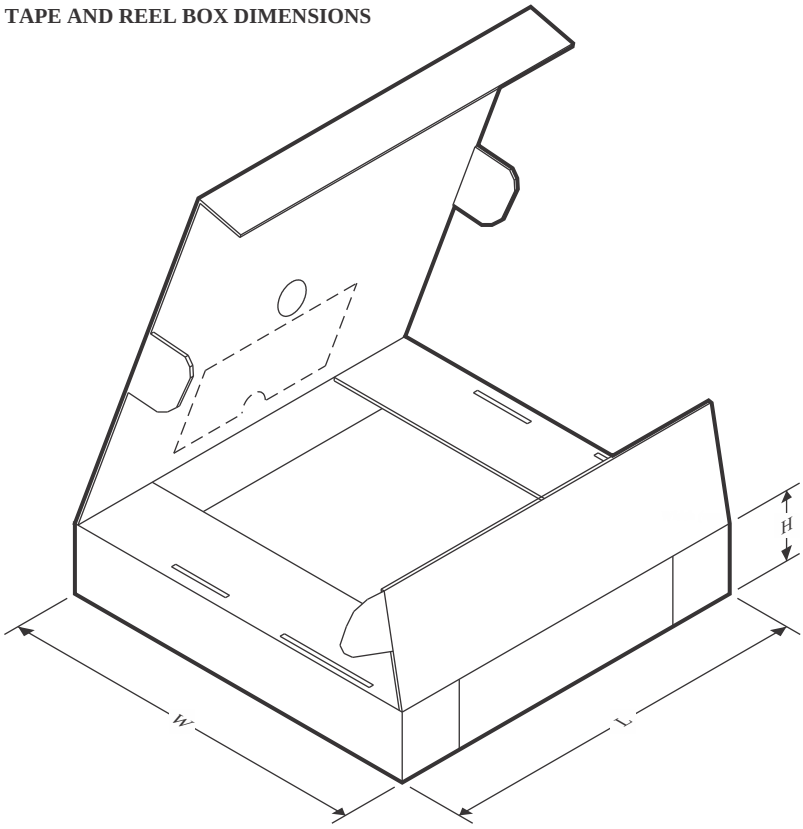

*All dimensions are nominal

Device	Package Type	Package Drawing	Pins	SPQ	Length (mm)	Width (mm)	Height (mm)
LMH1297RTVR	WQFN	RTV	32	1000	182.0	182.0	20.0
LMH1297RTVT	WQFN	RTV	32	250	210.0	185.0	35.0
LMH1297RTVTG4	WQFN	RTV	32	250	210.0	185.0	35.0

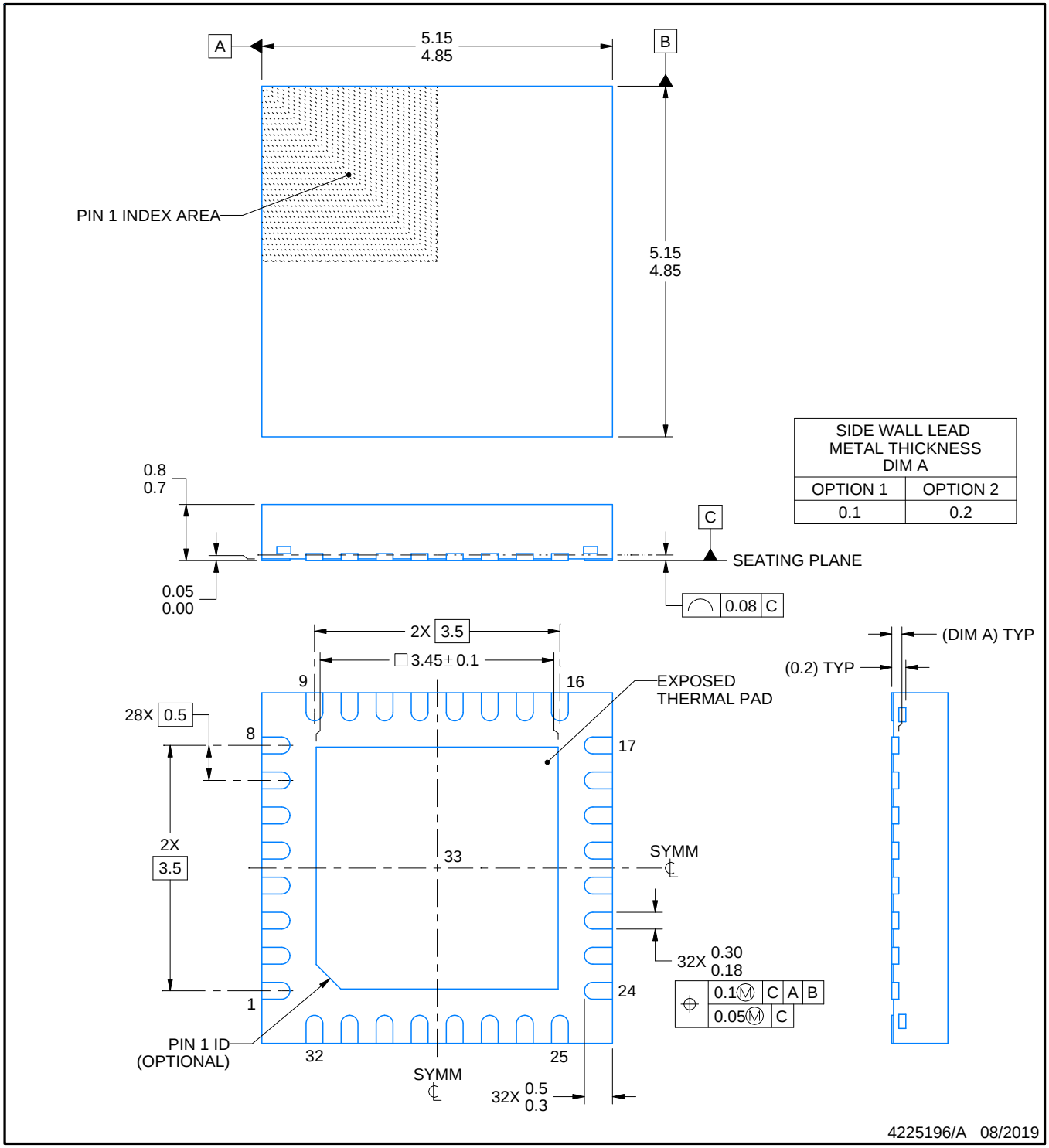

SIDE WALL LEAD METAL THICKNESS DIM A	
OPTION 1	OPTION 2
0.1	0.2

NOTES:

1. All linear dimensions are in millimeters. Any dimensions in parenthesis are for reference only. Dimensioning and tolerancing per ASME Y14.5M.
2. This drawing is subject to change without notice.
3. The package thermal pad must be soldered to the printed circuit board for thermal and mechanical performance.

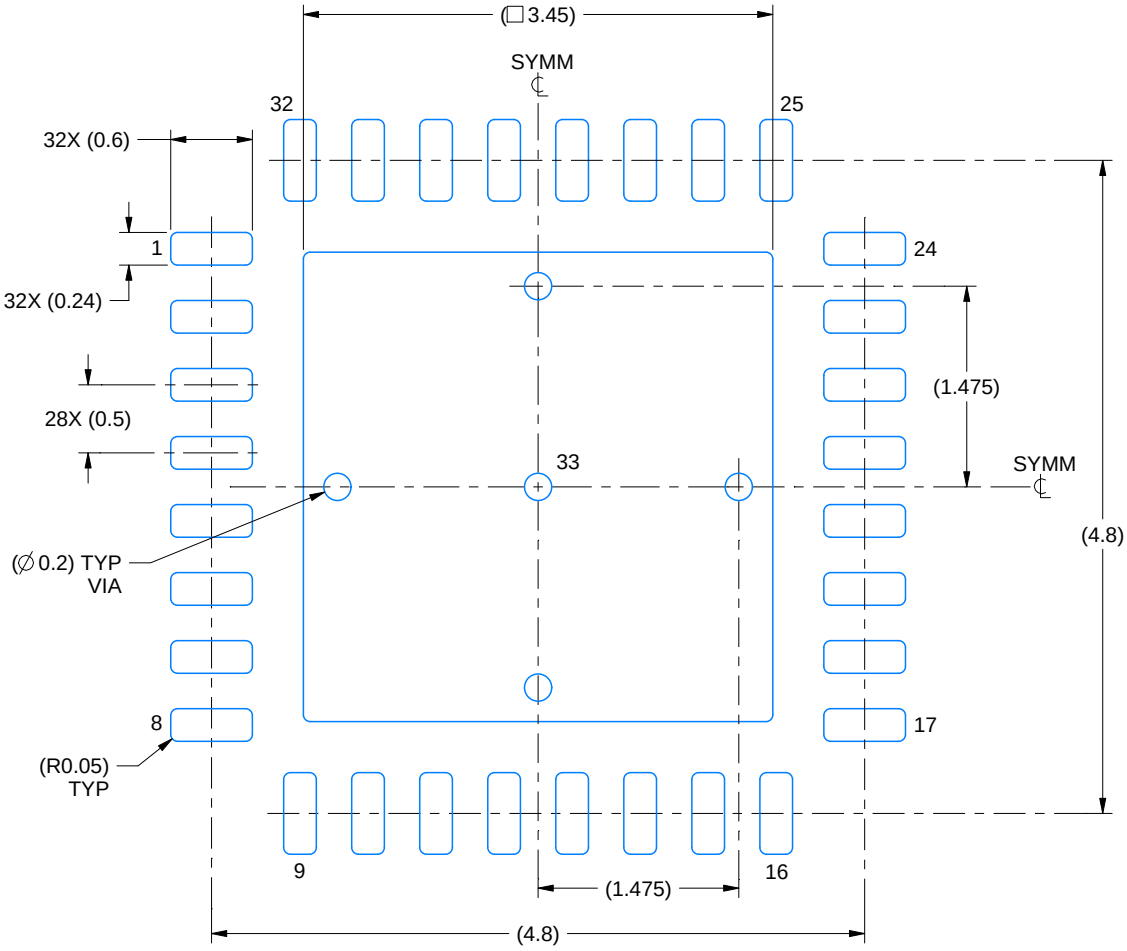

LAND PATTERN EXAMPLE
SCALE:18X

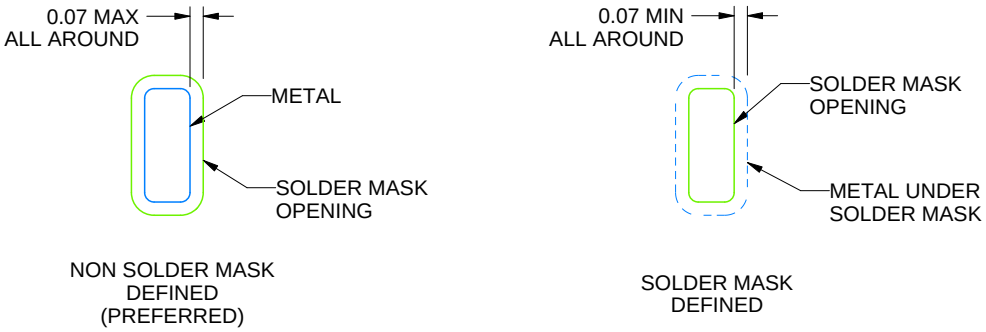

SOLDER MASK DETAILS

4225196/A 08/2019

NOTES: (continued)

4. This package is designed to be soldered to a thermal pad on the board. For more information, see Texas Instruments literature number SLUA271 (www.ti.com/lit/slua271).
5. Vias are optional depending on application, refer to device data sheet. If any vias are implemented, refer to their locations shown on this view. It is recommended that vias under paste be filled, plugged or tented.

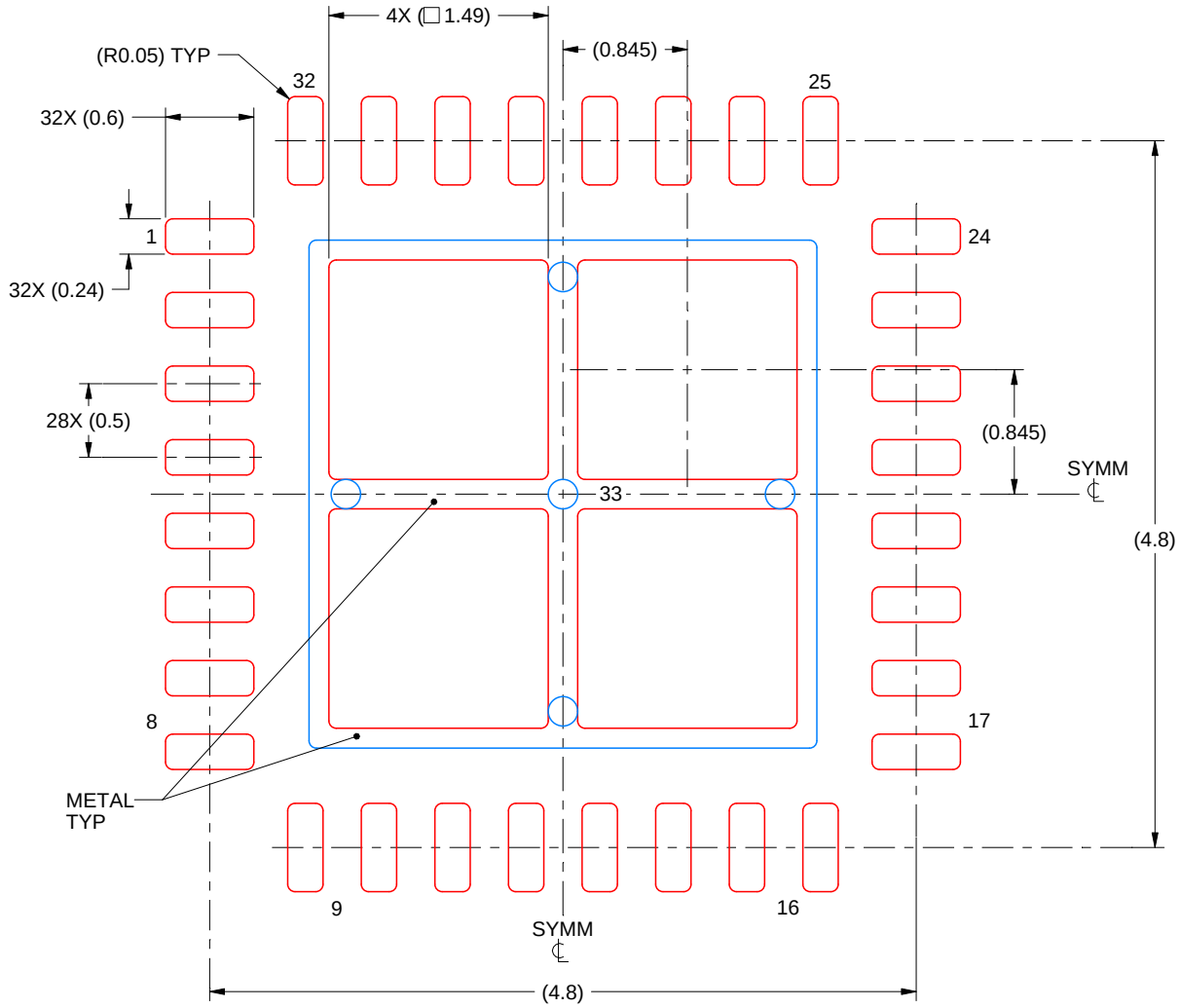

SOLDER PASTE EXAMPLE
BASED ON 0.125 mm THICK STENCIL

EXPOSED PAD 33:
75% PRINTED SOLDER COVERAGE BY AREA UNDER PACKAGE
SCALE:20X

4225196/A 08/2019

NOTES: (continued)

6. Laser cutting apertures with trapezoidal walls and rounded corners may offer better paste release. IPC-7525 may have alternate design recommendations.

IMPORTANT NOTICE AND DISCLAIMER

TI PROVIDES TECHNICAL AND RELIABILITY DATA (INCLUDING DATA SHEETS), DESIGN RESOURCES (INCLUDING REFERENCE DESIGNS), APPLICATION OR OTHER DESIGN ADVICE, WEB TOOLS, SAFETY INFORMATION, AND OTHER RESOURCES “AS IS” AND WITH ALL FAULTS, AND DISCLAIMS ALL WARRANTIES, EXPRESS AND IMPLIED, INCLUDING WITHOUT LIMITATION ANY IMPLIED WARRANTIES OF MERCHANTABILITY, FITNESS FOR A PARTICULAR PURPOSE OR NON-INFRINGEMENT OF THIRD PARTY INTELLECTUAL PROPERTY RIGHTS.

These resources are intended for skilled developers designing with TI products. You are solely responsible for (1) selecting the appropriate TI products for your application, (2) designing, validating and testing your application, and (3) ensuring your application meets applicable standards, and any other safety, security, regulatory or other requirements.

These resources are subject to change without notice. TI grants you permission to use these resources only for development of an application that uses the TI products described in the resource. Other reproduction and display of these resources is prohibited. No license is granted to any other TI intellectual property right or to any third party intellectual property right. TI disclaims responsibility for, and you will fully indemnify TI and its representatives against, any claims, damages, costs, losses, and liabilities arising out of your use of these resources.

TI’s products are provided subject to TI’s Terms of Sale or other applicable terms available either on ti.com or provided in conjunction with such TI products. TI’s provision of these resources does not expand or otherwise alter TI’s applicable warranties or warranty disclaimers for TI products.

TI objects to and rejects any additional or different terms you may have proposed.

Mailing Address: Texas Instruments, Post Office Box 655303, Dallas, Texas 75265
Copyright © 2025, Texas Instruments Incorporated