TPS54340B-Q1 4.5-V to 42-V Input, 3.5-A, Step-Down DC-DC Converter With Eco-Mode™

1 Features

- Qualified for Automotive Applications
- AEC-Q100 Qualified With the Following Results:
  - Device Temperature Grade 1: –40°C to 125°C Ambient Operating Temperature Range
  - Device HBM ESD Classification Level H1C
  - Device CDM ESD Classification Level C3B
- High Efficiency at Light Loads With Pulse Skipping Eco-mode™
- 92-mΩ High-Side MOSFET
- 146-µA Operating Quiescent Current and 2-µA Shutdown Current
- 100-kHz to 2.5-MHz Adjustable Switching Frequency
- Synchronizes to External Clock
- Low Dropout at Light Loads With Integrated BOOT Recharge FET
- Adjustable UVLO Voltage and Hysteresis
- 0.8 V 1% Internal Voltage Reference
- 8-Pin HSOP With PowerPAD™ Package
- –40°C to 150°C T_J Operating Range
- Supported by WEBENCH® Software Tool

2 Applications

- Vehicle Accessories: GPS (See SLVA412), Entertainment, ADAS, eCall
- USB Dedicated Charging Ports and Battery Chargers (See SLVA464)
- Industrial Automation and Motor Control
- 12-V and 24-V Industrial, Automotive, and Communications Power Systems

3 Description

The TPS54340B-Q1 device is a 42-V, 3.5-A, step-down regulator with an integrated high-side MOSFET. The device survives load-dump pulses up to 45 V per ISO 7637. Current-mode control provides simple external compensation and flexible component selection. A low-ripple pulse-skip mode reduces the no-load supply current to 146 µA. Shutdown supply current is reduced to 1 µA when the enable pin is pulled low.

Undervoltage lockout is internally set at 4.3 V but can be increased using an external resistor divider at the enable pin. The output voltage start-up ramp is internally controlled to provide a controlled start-up and eliminate overshoot.

A wide adjustable frequency range allows for optimization of either efficiency or external component size. Frequency foldback and thermal shutdown protects internal and external components during an overload condition.

The TPS54340B-Q1 device is available in an 8-pin thermally-enhanced HSOP PowerPAD package.

Device Information(1)

PART NUMBER	PACKAGE	BODY SIZE (NOM)
TPS54340B-Q1	HSOP (8)	4.89 mm × 3.90 mm

(1) For all available packages, see the orderable addendum at the end of the data sheet.

Simplified Schematic

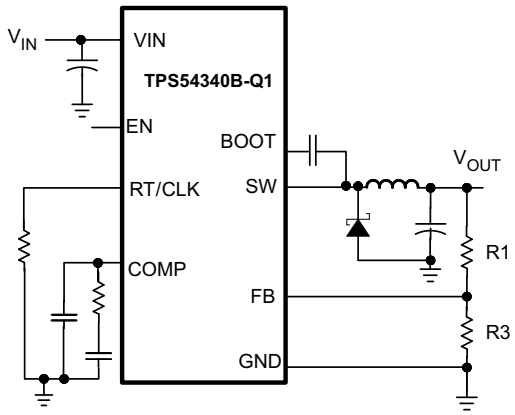

Copyright © 2016, Texas Instruments Incorporated

Efficiency vs Load Current

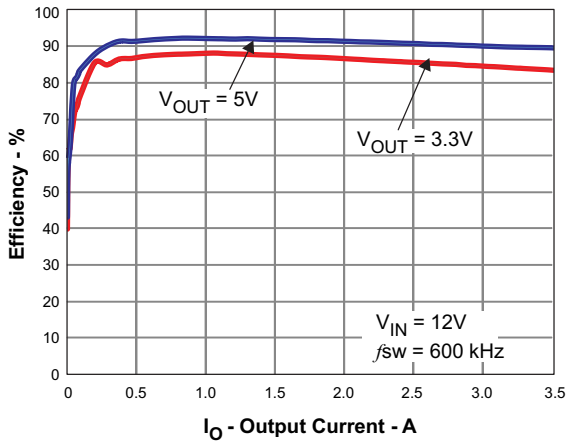

An IMPORTANT NOTICE at the end of this data sheet addresses availability, warranty, changes, use in safety-critical applications, intellectual property matters and other important disclaimers. PRODUCTION DATA.

Table of Contents

1 Features ... 1
2 Applications ... 1
3 Description ... 1
4 Revision History ... 2
5 Pin Configuration and Functions ... 3
6 Specifications ... 4
6.1 Absolute Maximum Ratings ... 4
6.2 ESD Ratings ... 4
6.3 Recommended Operating Conditions ... 4
6.4 Thermal Information ... 4
6.5 Electrical Characteristics ... 5
6.6 RT/CLK Timing Requirements ... 5
6.7 Switching Characteristics ... 6
6.8 Typical Characteristics ... 7
7 Detailed Description ... 11
7.1 Overview ... 11
7.2 Functional Block Diagram ... 12
7.3 Feature Description ... 12
7.4 Device Functional Modes ... 22
8 Application and Implementation ... 23
8.1 Application Information ... 23
8.2 Typical Applications ... 23
9 Power Supply Recommendations ... 35
10 Layout ... 35
10.1 Layout Guidelines ... 35
10.2 Layout Example ... 36
10.3 Estimated Circuit Area ... 36
11 Device and Documentation Support ... 37
11.1 Device Support ... 37
11.2 Documentation Support ... 37
11.3 Community Resources ... 37
11.4 Trademarks ... 37
11.5 Electrostatic Discharge Caution ... 37
11.6 Glossary ... 37
12 Mechanical, Packaging, and Orderable Information ... 37

4 Revision History

DATE	REVISION	NOTES
February 2017	*	Initial release.

Copyright © 2017, Texas Instruments Incorporated

5 Pin Configuration and Functions

DDA Package
8-Pin HSOP
Top View

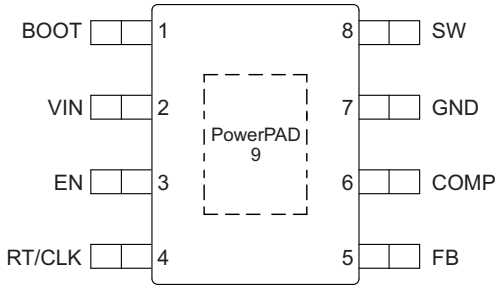

Pin Functions

PIN		I/O	DESCRIPTION
NAME	NO.		
BOOT	1	O	A bootstrap capacitor is required between BOOT and SW. If the voltage on this capacitor is below the minimum required to operate the high-side MOSFET, the output switches off until the capacitor is refreshed.
COMP	6	O	Error amplifier output and input to the output switch current (PWM) comparator. Connect frequency compensation components to this pin.
EN	3	I	Enable pin, with internal pullup current source. Pull below 1.2 V to disable. Float to enable. Adjust the input undervoltage lockout with two resistors. See the *Enable and Adjusting Undervoltage Lockout* section.
FB	5	I	Inverting input of the transconductance (gm) error amplifier.
GND	7	—	Ground
RT/CLK	4	I	Resistor Timing and External Clock. An internal amplifier holds this pin at a fixed voltage when using an external resistor to ground to set the switching frequency. If the pin is pulled above the PLL upper threshold, a mode change occurs and the pin becomes a synchronization input. The internal amplifier is disabled and the pin is a high impedance clock input to the internal PLL. If clocking edges stop, the internal amplifier is reenabled and the operating mode returns to resistor frequency programming.
SW	8	I	The source of the internal high-side power MOSFET and switching node of the converter.
Thermal Pad	9	—	GND pin must be electrically connected to the exposed pad on the printed-circuit-board for proper operation.
VIN	2	I	Input supply voltage with 4.5-V to 42-V operating range.

6 Specifications

6.1 Absolute Maximum Ratings

over operating free-air temperature range (unless otherwise noted)[1]

		MIN	MAX	UNIT
Input voltage	VIN	–0.3	45	V
	EN	–0.3	8.4	
	BOOT		53	
	FB	–0.3	3	
	COMP	–0.3	3	
	RT/CLK	–0.3	3.6	
Output voltage	BOOT-SW		8	V
	SW	–0.6	45	
	SW, 10-ns Transient	–2	45	
Operating junction temperature		–40	150	°C
Storage temperature		–65	150	°C

(1) Stresses beyond those listed under *Absolute Maximum Ratings* may cause permanent damage to the device. These are stress ratings only, which do not imply functional operation of the device at these or any other conditions beyond those indicated under *Recommended Operating Conditions*. Exposure to absolute-maximum-rated conditions for extended periods may affect device reliability.

6.2 ESD Ratings

		VALUE	UNIT
$V_{(ESD)}$ Electrostatic discharge	Human body model (HBM), per ANSI/ESDA/JEDEC JS-001[1]	±2000	V
	Charged device model (CDM), per JEDEC specification JESD22-C101[2]	±500	

(1) JEDEC document JEP155 states that 500-V HBM allows safe manufacturing with a standard ESD control process.
(2) JEDEC document JEP157 states that 250-V CDM allows safe manufacturing with a standard ESD control process.

6.3 Recommended Operating Conditions

over operating free-air temperature range (unless otherwise noted)

		MIN	NOM	MAX	UNIT
V_{IN}	Supply input voltage [1]	$V_O + V_{do}$		42	V
V_O	Output voltage	0.8		58.8	V
I_O	Output current	0		3.5	A
T_J	Junction Temperature	–40		150	°C

(1) See Equation 1 in the Feature Description section.

6.4 Thermal Information

THERMAL METRIC[1][2]		TPS54340B-Q1 DDA (HSOP) 8 PINS	UNIT
$R_{\theta JA}$	Junction-to-ambient thermal resistance (standard board)	42	°C/W
$R_{\theta JC(top)}$	Junction-to-case(top) thermal resistance	45.8	°C/W
$R_{\theta JB}$	Junction-to-board thermal resistance	23.4	°C/W
ψ_{JT}	Junction-to-top characterization parameter	5.9	°C/W
ψ_{JB}	Junction-to-board characterization parameter	23.4	°C/W
$R_{\theta JC(bot)}$	Junction-to-case(bottom) thermal resistance	3.6	°C/W

(1) For more information about traditional and new thermal metrics, see the *Semiconductor and IC Package Thermal Metrics* application report, SPRA953.
(2) Power rating at a specific ambient temperature TA should be determined with a junction temperature of 150°C. This is the point where distortion starts to substantially increase. See power dissipation estimate in application section of this data sheet for more information.

Copyright © 2017, Texas Instruments Incorporated

6.5 Electrical Characteristics

T_J = –40°C to 150°C, VIN = 4.5 V to 42 V (unless otherwise noted)

PARAMETER	TEST CONDITIONS	MIN	TYP	MAX	UNIT
SUPPLY VOLTAGE (VIN PIN)					
Operating input voltage		4.5		42	V
Internal undervoltage lockout threshold	Rising	4.1	4.3	4.48	V
Internal undervoltage lockout threshold hysteresis			325		mV
Shutdown supply current	EN = 0 V, 25°C, 4.5 V ≤ VIN ≤ 42 V		2.25	4.5	µA
Operating: nonswitching supply current	FB = 0.9 V, T_A = 25°C		146	175	µA
ENABLE AND UVLO (EN PIN)					
Enable threshold voltage	No voltage hysteresis, rising and falling	1.1	1.2	1.3	V
Input current	Enable threshold 50 mV		–4.6		µA
	Enable threshold –50 mV	–0.58	–1.2	-1.8	µA
Hysteresis current		–2.2	–3.4	-4.5	µA
Enable to COMP active	VIN = 12 V , T_A = 25°C		346		µs
INTERNAL SOFT-START TIME					
Soft-Start Time	f_{SW} = 500 kHz, 10% to 90%		2.1		ms
Soft-Start Time	f_{SW} = 2.5 MHz, 10% to 90%		0.42		ms
VOLTAGE REFERENCE					
Voltage reference		0.792	0.8	0.808	V
HIGH-SIDE MOSFET					
On-resistance	VIN = 12 V, BOOT-SW = 6 V		92	190	mΩ
ERROR AMPLIFIER					
Input current			50		nA
Error amplifier transconductance (g_M)	–2 µA < I_{COMP} < 2 µA, V_{COMP} = 1 V		350		µS
Error amplifier transconductance (g_M) during soft-start	–2 µA < I_{COMP} < 2 µA, V_{COMP} = 1 V, V_{FB} = 0.4 V		77		µS
Error amplifier DC gain	V_{FB} = 0.8 V		10,000		V/V
Min unity gain bandwidth			2500		kHz
Error amplifier source and sink	$V_{(COMP)}$ = 1 V, 100-mV overdrive		±30		µA
COMP to SW current transconductance			12		A/V
CURRENT LIMIT					
Current limit threshold	All VIN and temperatures, Open Loop(1)	4.5	5.5	6.8	A
	All temperatures, VIN = 12 V, Open Loop(1)	4.5	5.5	6.25	A
	VIN = 12 V, T_A = 25°C, Open Loop(1)	5.2	5.5	5.85	A
Current limit threshold delay			60		ns
THERMAL SHUTDOWN					
Thermal shutdown			176		°C
Thermal shutdown hysteresis			12		°C
TIMING RESISTOR AND EXTERNAL CLOCK (RT/CLK PIN)					
RT/CLK high threshold			1.55	2	V
RT/CLK low threshold		0.5	1.2		V

(1) Open Loop current limit measured directly at the SW pin and is independent of the inductor value and slope compensation.

6.6 RT/CLK Timing Requirements

	MIN	NOM	MAX	UNIT
Minimum CLK input pulse width		15		ns

6.7 Switching Characteristics

over operating free-air temperature range (unless otherwise noted)

PARAMETER		TEST CONDITIONS	MIN	TYP	MAX	UNIT
TIMING RESISTOR AND EXTERNAL CLOCK (RT/CLK PIN)						
	Switching frequency range using RT mode		100		2500	kHz
f_{SW}	Switching frequency	R_T = 200 kΩ	450	500	550	kHz
	Switching frequency range using CLK mode		160		2300	kHz
	RT/CLK falling edge to SW rising edge delay	Measured at 500 kHz with RT resistor in series		55		ns
	PLL lock in time	Measured at 500 kHz		78		µs

Copyright © 2017, Texas Instruments Incorporated

6.8 Typical Characteristics

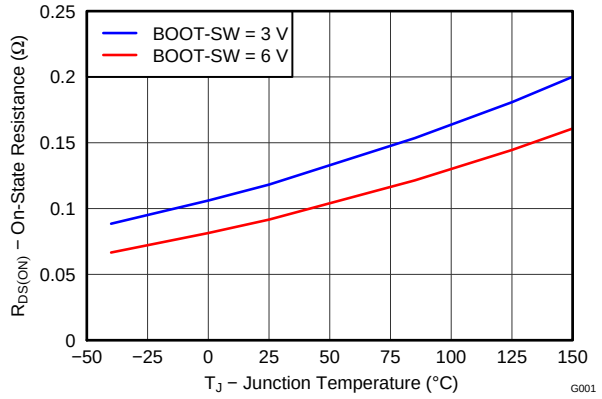

Figure 1. ON Resistance vs Junction Temperature

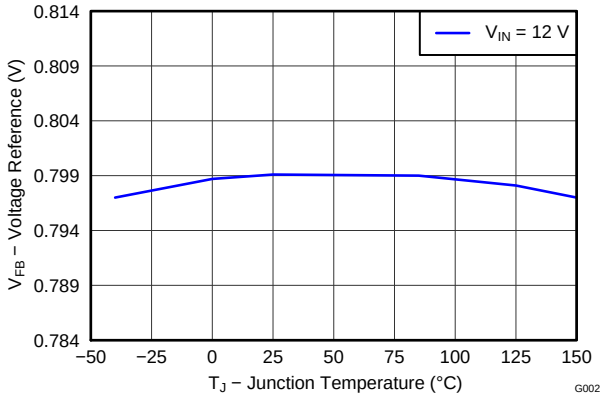

Figure 2. Voltage Reference vs Junction Temperature

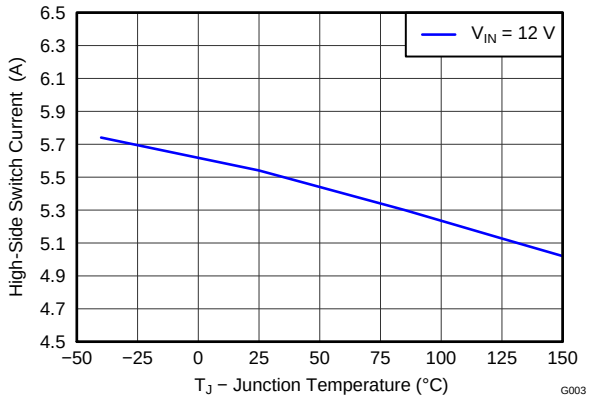

Figure 3. Switch Current Limit vs Junction Temperature

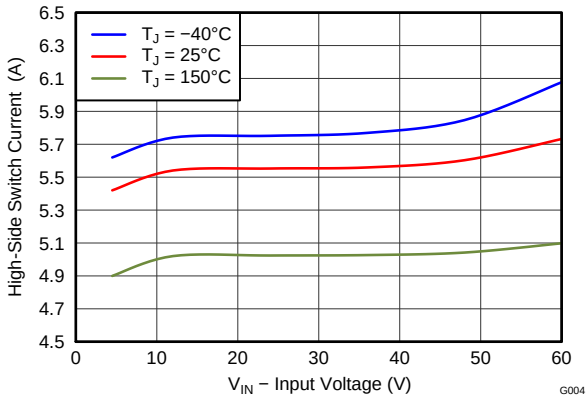

Figure 4. High-side Switch Current Limit vs Input Voltage

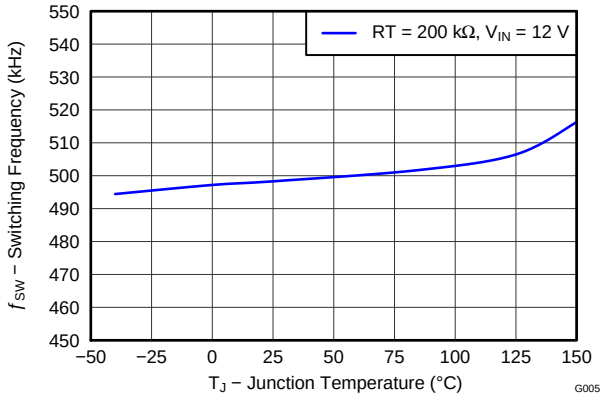

Figure 5. Switching Frequency vs Junction Temperature

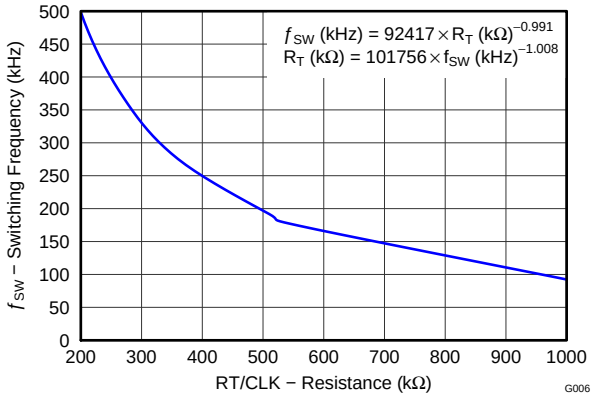

Figure 6. Switching Frequency vs RT/CLK Resistance Low-Frequency Range

Typical Characteristics (continued)

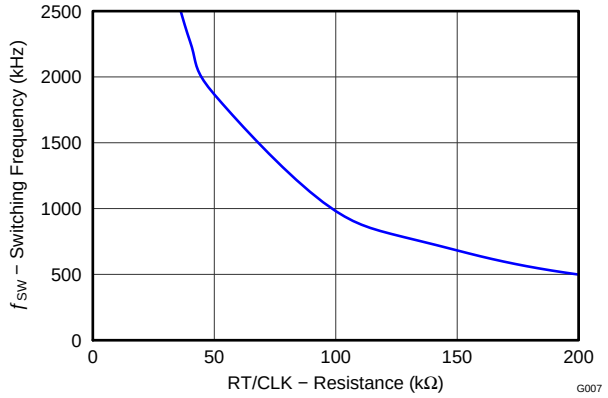

Figure 7. Switching Frequency vs RT/CLK Resistance High-Frequency Range

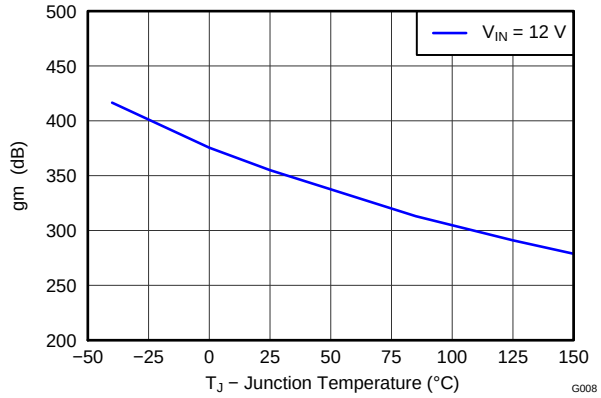

Figure 8. EA Transconductance vs Junction Temperature

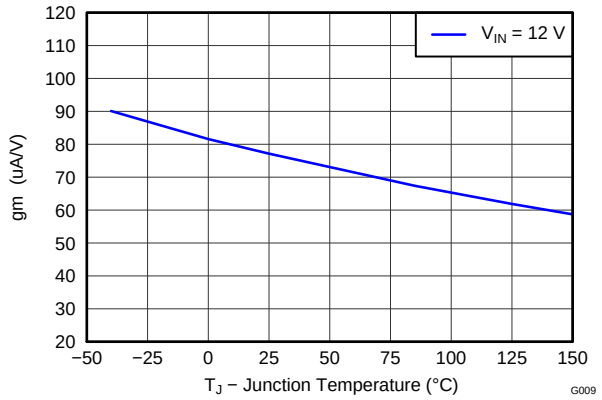

Figure 9. EA Transconductance During Soft Start vs Junction Temperature

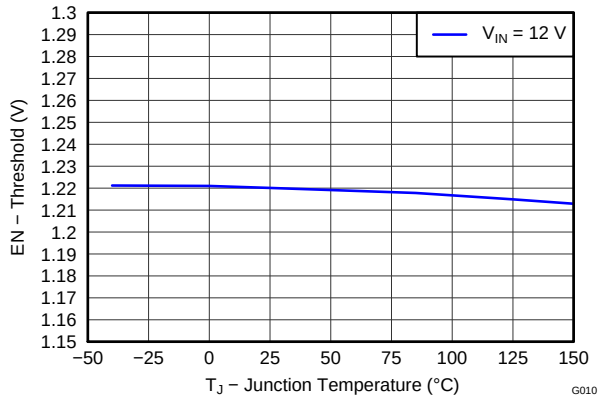

Figure 10. EN Pin Voltage vs Junction Temperature

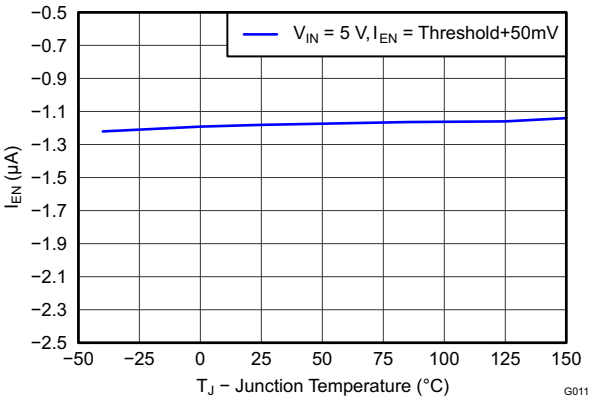

Figure 11. EN Pin Current vs Junction Temperature

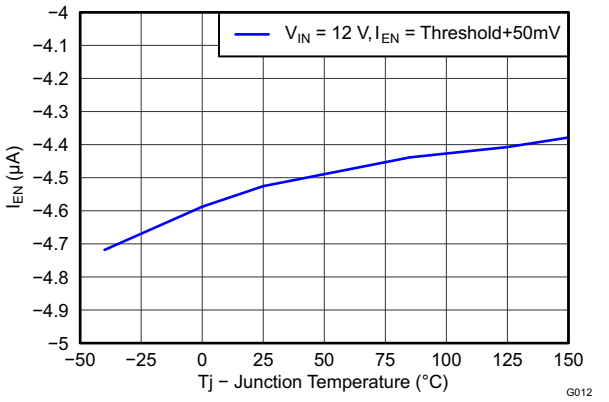

Figure 12. EN Pin Current vs Junction Temperature

Copyright © 2017, Texas Instruments Incorporated

Typical Characteristics (continued)

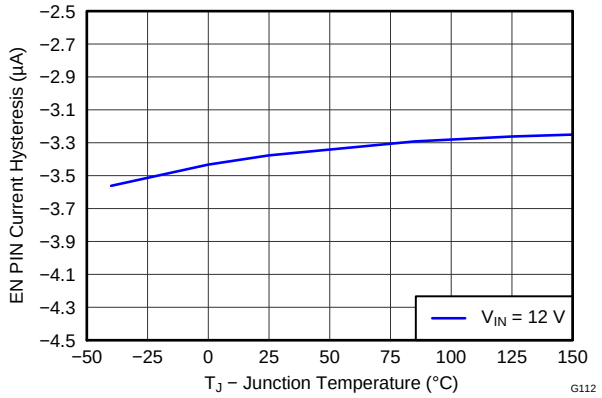

Figure 13. EN Pin Current Hysteresis vs Junction Temperature

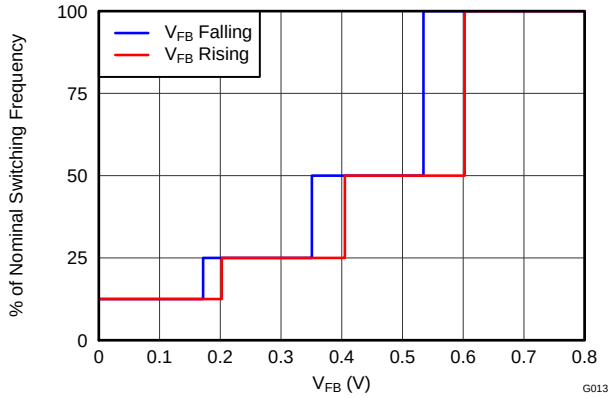

Figure 14. Switching Frequency vs FB

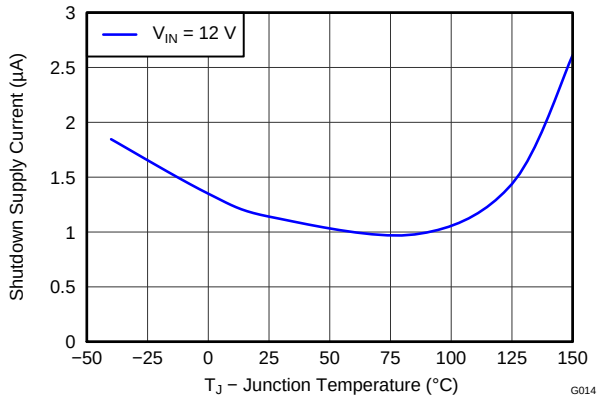

Figure 15. Shutdown Supply Current vs Junction Temperature

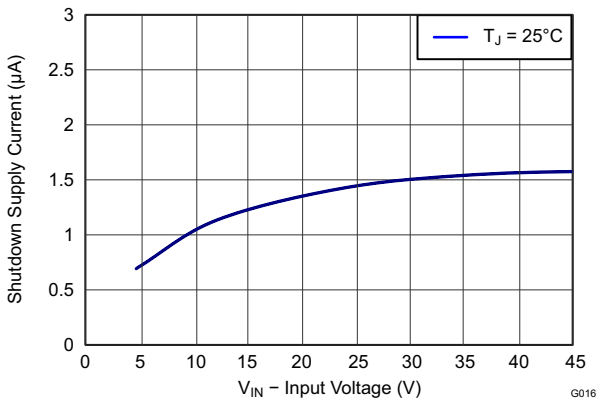

Figure 16. Shutdown Supply Current vs Input Voltage (V_{IN})

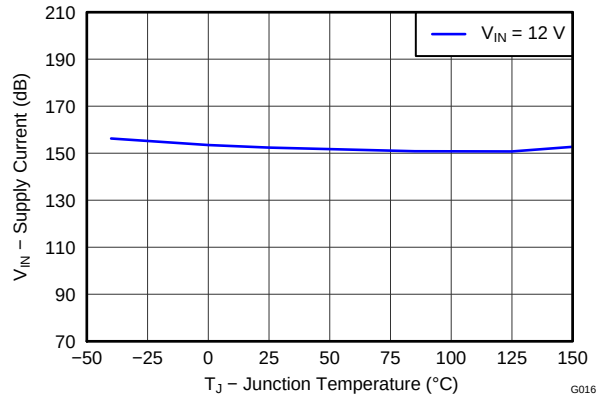

Figure 17. V_{IN} Supply Current vs Junction Temperature

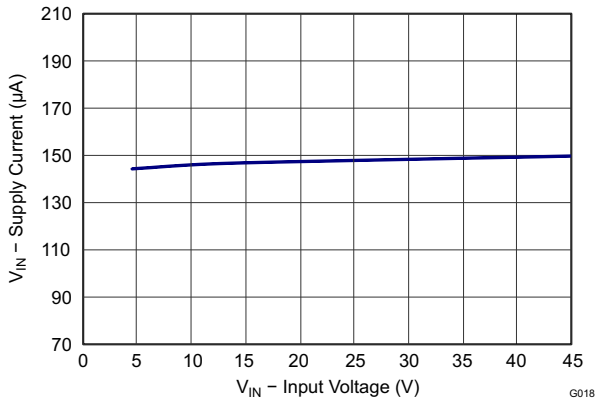

Figure 18. V_{IN} Supply Current vs Input Voltage

Typical Characteristics (continued)

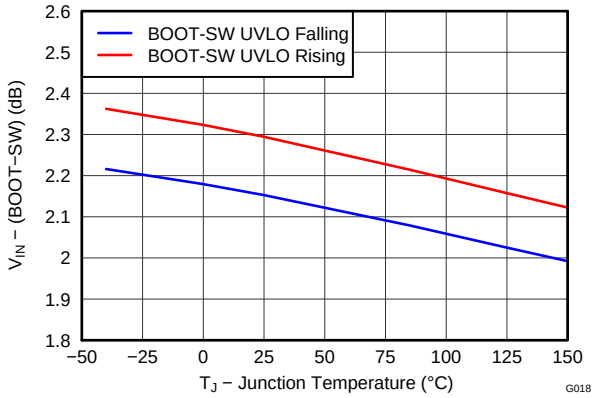

Figure 19. BOOT-SW UVLO vs Junction Temperature

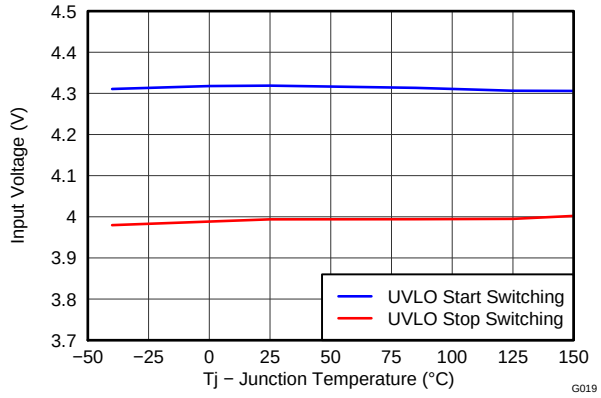

Figure 20. Input Voltage UVLO vs Junction Temperature

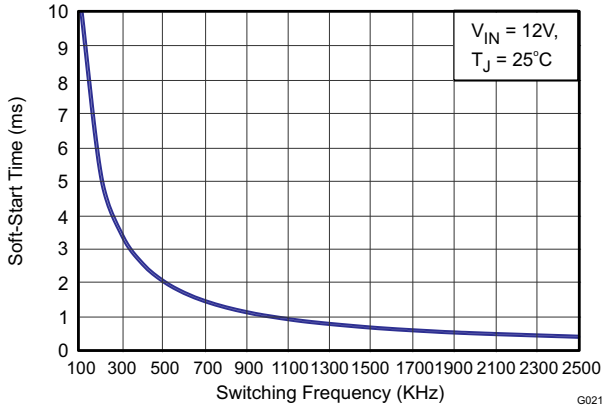

Figure 21. Soft-Start Time vs Switching Frequency

Copyright © 2017, Texas Instruments Incorporated

7 Detailed Description

7.1 Overview

The TPS54340B-Q1 device is a 42-V, 3.5-A, step-down (buck) regulator with an integrated high-side N-channel MOSFET. The device implements constant-frequency current-mode control, which reduces output capacitance and simplifies external frequency compensation. The wide switching-frequency range of 100 kHz to 2500 kHz allows for either efficiency or size optimization when selecting the output filter components. The switching frequency is adjusted using a resistor to ground connected to the RT/CLK pin. The device has an internal phase-locked loop (PLL) connected to the RT/CLK pin that synchronizes the power switch turnon to a falling edge of an external clock signal.

The TPS54340B-Q1 device has a default input start-up voltage of approximately 4.3 V. The EN pin adjusts the input voltage undervoltage lockout (UVLO) threshold with two external resistors. An internal pullup current source enables operation when the EN pin is floating. The operating current is 146 μA under no load condition (not switching). When the device is disabled, the supply current is 1 μA.

The integrated 92-mΩ high-side MOSFET supports high-efficiency power-supply designs capable of delivering 3.5 A of continuous current to a load. The gate-drive bias voltage for the integrated high-side MOSFET is supplied by a bootstrap capacitor connected from the BOOT to SW pins. The TPS54340B-Q1 device reduces the external component count by integrating the bootstrap recharge diode. The BOOT pin capacitor voltage is monitored by a UVLO circuit which turns off the high-side MOSFET when the BOOT to SW voltage falls below a preset threshold. An automatic BOOT capacitor recharge circuit allows the TPS54340B-Q1 device to operate at high duty cycles approaching 100%. Therefore, the maximum output voltage is near the minimum input supply voltage of the application. The minimum output voltage is the internal 0.8-V feedback reference.

Output-overvoltage transients are minimized by an Overvoltage Protection (OVP) comparator. When the OVP comparator is activated, the high-side MOSFET turns off and remains off until the output voltage is less than 106% of the desired output voltage.

The TPS54340B-Q1 device includes an internal soft-start circuit that slows the output rise time during start-up to reduce in-rush current and output voltage overshoot. Output overload conditions reset the soft-start timer. When the overload condition is removed, the soft-start circuit controls the recovery from the fault output level to the nominal regulation voltage. A frequency-foldback circuit reduces the switching frequency during start-up and overcurrent fault conditions to help maintain control of the inductor current.

Copyright © 2017, Texas Instruments Incorporated

7.2 Functional Block Diagram

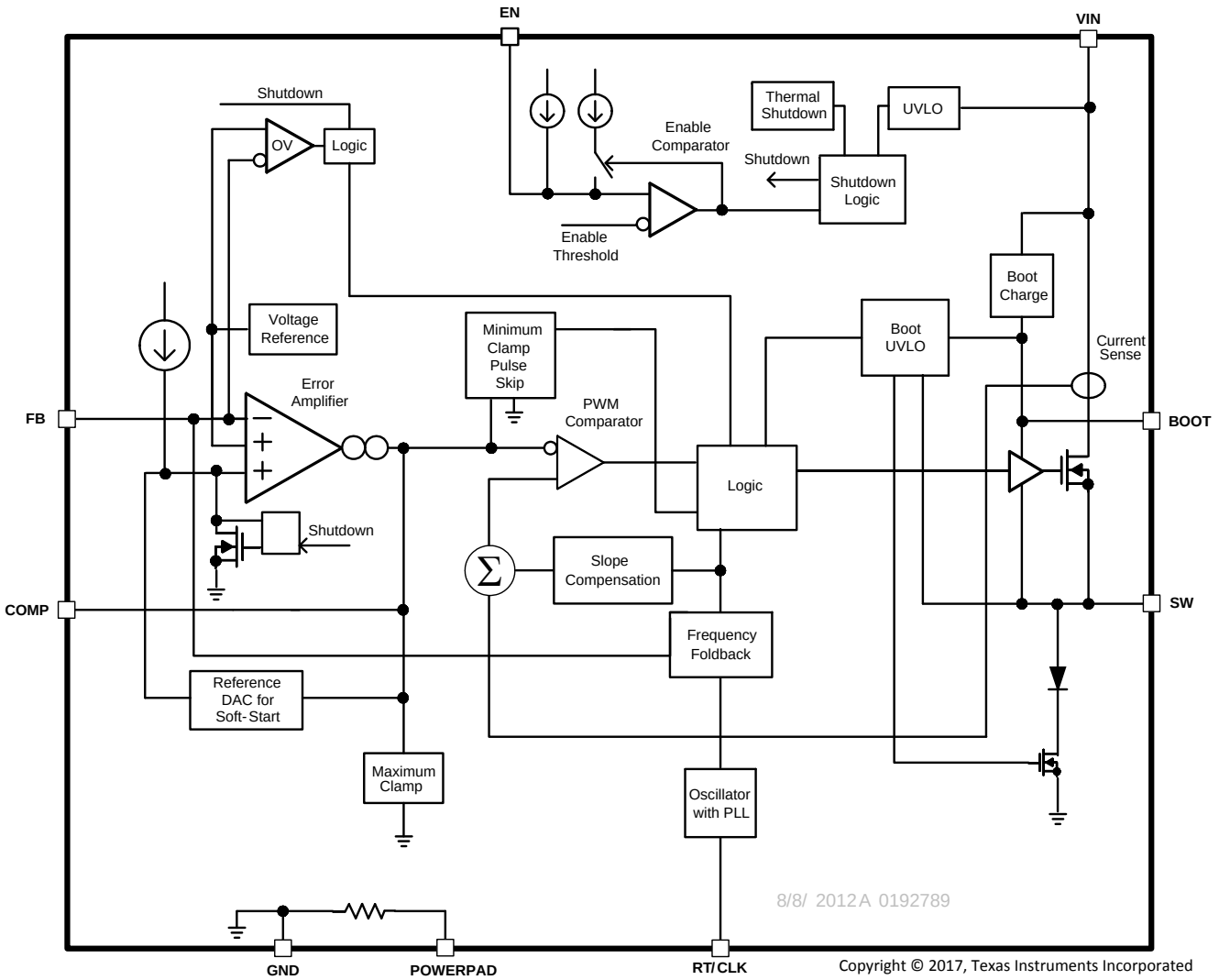

7.3 Feature Description

7.3.1 Fixed-Frequency PWM Control

The TPS54340B-Q1 device uses fixed-frequency peak-current-mode control with adjustable switching frequency. The output voltage is compared through external resistors connected to the FB pin to an internal voltage reference by an error amplifier. An internal oscillator initiates the turnon of the high-side power switch. The error amplifier output at the COMP pin controls the high-side power-switch current. When the high-side MOSFET switch current reaches the threshold level set by the COMP voltage, the power switch turns off. The COMP pin voltage increases and decreases as the output current increases and decreases. The device implements current limiting by clamping the COMP-pin voltage to a maximum level. The pulse skipping Eco-mode is implemented with a minimum voltage clamp on the COMP pin.

7.3.2 Slope Compensation Output Current

The TPS54340B-Q1 device adds a compensating ramp to the MOSFET switch-current sense signal. This slope compensation prevents sub-harmonic oscillations at duty cycles greater than 50%. The peak current limit of the high-side switch is not affected by the slope compensation and remains constant over the full duty-cycle range.

Copyright © 2017, Texas Instruments Incorporated

Feature Description (continued)

7.3.3 Pulse Skip Eco-mode™

The TPS54340B-Q1 device operates in a pulse skipping Eco-mode at light-load currents to improve efficiency by reducing switching and gate-drive losses. If the output voltage is within regulation and the peak-switch current at the end of any switching cycle is below the pulse-skipping current threshold, the device enters Eco-mode. The pulse-skipping current threshold is the peak switch-current level corresponding to a nominal COMP voltage of 600 mV.

When in Eco-mode, the COMP pin voltage is clamped at 600 mV and the high-side MOSFET is inhibited. Because the device is not switching, the output voltage begins to decay. The voltage control loop responds to the falling output voltage by increasing the COMP pin voltage. The high-side MOSFET enables and switching resumes when the error amplifier lifts COMP above the pulse skipping threshold. The output voltage recovers to the regulated value, and COMP eventually falls below the Eco-mode pulse-skipping threshold at which time the device again enters Eco-mode. The internal PLL remains operational when in Eco-mode. When operating at light-load currents in Eco-mode, the switching transitions occur synchronously with the external clock signal.

During Eco-mode operation, the TPS54340B-Q1 device senses and controls peak switch current, not the average load current. Therefore the load current at which the device enters Eco-mode is dependent on the output inductor value. The circuit in Figure 33 enters Eco-mode at about 31.4-mA output current. As the load current approaches zero, the device enters a pulse-skip mode during which it draws only 146-μA input quiescent current.

7.3.4 Low Dropout Operation and Bootstrap Voltage (BOOT)

The TPS54340B-Q1 device provides an integrated-bootstrap voltage regulator. A small capacitor between the BOOT and SW pins provides the gate drive voltage for the high-side MOSFET. The BOOT capacitor refreshes when the high-side MOSFET is off and the external low-side diode conducts. The recommended value of the BOOT capacitor is 0.1 μF. For stable performance over temperature and voltage, TI recommends a ceramic capacitor with an X7R or X5R grade dielectric with a voltage rating of 10 V or higher.

When operating with a low-voltage difference from input to output, the high-side MOSFET of the TPS54340B-Q1 device operates at 100% duty cycle as long as the BOOT to SW pin voltage is greater than 2.1 V. When the voltage from BOOT to SW drops to less than 2.1 V, the high-side MOSFET turns off and an integrated low-side MOSFET pulls SW low to recharge the BOOT capacitor. To reduce the losses of the small low-side MOSFET at high-output voltages, it is disabled at 24-V output and reenabled when the output reaches 21.5 V.

Because the gate drive current sourced from the BOOT capacitor is small, the high-side MOSFET can remain on for many switching cycles before the MOSFET is turned off to refresh the capacitor. Thus, the effective duty cycle of the switching regulator can be high, approaching 100%. The effective duty cycle of the converter during dropout is mainly influenced by the voltage drops across the power MOSFET, the inductor resistance, the low-side diode voltage, and the printed-circuit-board resistance.

calculates the minimum input voltage required to regulate the output voltage and ensure proper operation of the device. This calculation must include tolerance of the component specifications and the variation of these specifications at their maximum operating temperature in the application.

$$V_{IN}(\min) = \frac{V_{OUT} + V_F + R_{dc} \times I_{OUT}}{D} + R_{DS}(on) \times I_{OUT} - V_F$$

where

- V_F = Schottky diode forward voltage
- R_{DC} = DC resistance of inductor plus PCB
- $R_{DS(on)}$ = High-side MOSFET resistance
- D = Effective duty cycle of 99%. (1)

During high-duty-cycle (low-dropout) conditions, the inductor-current ripple increases when the BOOT capacitor recharges which results in an increase in output voltage ripple. Increased ripple occurs when the off time required to recharge the BOOT capacitor is longer than the high-side off time associated with cycle-by-cycle PWM control.

At heavy loads, the minimum input voltage must be increased to ensure a monotonic start-up. Equation 2 calculates the minimum input voltage for this condition.

Feature Description (continued)

$V_O max = Dmax \times (V_{VIN} min - I_O max \times R_{DS(on)} + V_F) - V_F - I_O max \times R_{dc}$

where

- $Dmax \geq 0.9$
- $R_{DS(on)} = 1 / (-0.3 \times VB2SW^2 + 3.577 \times VB2SW - 4.246)$
- $VB2SW = VBOOT + V_F$
- $VBOOT = (1.41 \times V_{VIN} - 0.554 - V_F \times f_{sw} \times 10^{-6} - 1.847 \times 10^3 \times IB2SW) / (1.41 + f_{sw} \times 10^{-6})$
- $IB2SW = 100 \times 10^{-6}$ A (2)

7.3.5 Error Amplifier

The TPS54340B-Q1 voltage regulation loop is controlled by a transconductance error amplifier. The error amplifier compares the FB pin voltage to the lower of the internal soft-start voltage or the internal 0.8-V voltage reference. The transconductance (gm) of the error amplifier is 350 μA/V during normal operation. During soft-start operation, the transconductance is reduced to 78 μA/V and the error amplifier is referenced to the internal soft-start voltage.

The frequency compensation components (capacitor, series resistor and capacitor) are connected between the error amplifier output COMP pin and GND pin.

7.3.6 Adjusting the Output Voltage

The internal voltage reference produces a precise 0.8 V ±1% voltage reference over the operating temperature and voltage range by scaling the output of a bandgap reference circuit. The output voltage is set by a resistor divider from the output node to the FB pin. TI recommends using divider resistors with a 1% tolerance or better. Select the low-side resistor R_{LS} for the desired divider current, and use Equation 3 to calculate R_{HS}. To improve efficiency at light loads, consider using larger value resistors. However, if the values are too high, the regulator is more susceptible to noise and voltage errors from the FB input current may become noticeable.

$$R_{HS} = R_{LS} \times \left(\frac{Vout - 0.8V}{0.8\ V}\right) \quad (3)$$

7.3.7 Enable and Adjusting Undervoltage Lockout

The TPS54340B-Q1 device is enabled when the VIN-pin voltage rises above 4.3 V and the EN-pin voltage exceeds the enable threshold of 1.2 V. The TPS54340B-Q1 device is disabled when the VIN pin voltage falls to less than 4 V, or when the EN pin voltage is less than 1.2 V. The EN pin has an internal pullup current source, I1, of 1.2 μA that enables operation of the TPS54340B-Q1 device when the EN pin floats.

If an application requires a higher undervoltage lockout (UVLO) threshold, use the circuit shown in Figure 22 to adjust the input voltage UVLO with two external resistors. When the EN pin voltage exceeds 1.2 V, an additional 3.4 μA of hysteresis current, Ihys, is sourced out of the EN pin. When the EN pin is pulled to less than 1.2 V, the 3.4 μA Ihys current is removed. This additional current facilitates adjustable input voltage UVLO hysteresis. Use Equation 4 to calculate R_{UVLO1} for the desired UVLO hysteresis voltage. Use Equation 5 to calculate R_{UVLO2} for the desired VIN start voltage.

In applications designed to start at relatively low input voltages (for example 4.5 V) and withstand high input voltages (for example 40 V), the EN pin can experience a voltage greater than the absolute maximum voltage of 8.4 V during the high-input voltage condition. TI recommends using a Zener diode to clamp the pin voltage below the absolute maximum rating.

Copyright © 2017, Texas Instruments Incorporated

Feature Description (continued)

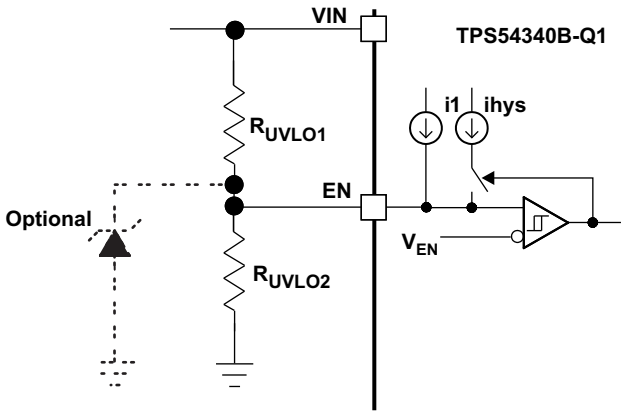

Copyright © 2016, Texas Instruments Incorporated

Figure 22. Adjustable Undervoltage Lockout (UVLO)

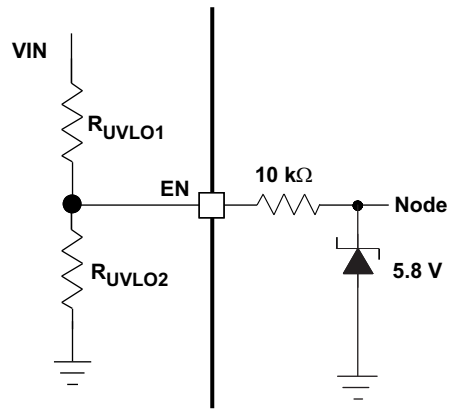

Copyright © 2016, Texas Instruments Incorporated

Figure 23. Internal EN Clamp

$$R_{UVLO1} = \frac{V_{START} - V_{STOP}}{I_{HYS}} \tag{4}$$

$$R_{UVLO2} = \frac{V_{ENA}}{\frac{V_{START} - V_{ENA}}{R_{UVLO1}} + I_1} \tag{5}$$

7.3.8 Internal Soft-Start

The TPS54340-Q1 device has an internal digital soft-start that ramps the reference voltage from 0 V to the final value in 1024 switching cycles. The internal soft-start time (10% to 90%) is calculated using Equation 6

$$t_{SS}(ms) = \frac{1024}{f_{SW}(kHz)} \tag{6}$$

If the EN pin is pulled below the stop threshold of 1.2 V, switching stops and the internal soft start resets. The soft start also resets in thermal shutdown.

7.3.9 Constant Switching Frequency and Timing Resistor (RT/CLK) Pin)

The switching frequency of the TPS54340B-Q1 device is adjustable over a wide range from 100 kHz to 2500 kHz by placing a resistor between the RT/CLK pin and GND pin. The RT/CLK pin voltage is typically 0.5 V and must have a resistor to ground to set the switching frequency. To determine the timing resistance for a given switching frequency, use Equation 7 or Equation 8 or the curves in Figure 5 and Figure 6. To reduce the solution size one typically sets the switching frequency as high as possible, but tradeoffs of the conversion efficiency, maximum input voltage, and minimum controllable on time must be considered. The minimum-controllable on time is typically 135 ns which limits the maximum operating frequency in applications with high input-to-output step-down ratios. The maximum switching frequency is also limited by the frequency-foldback circuit. A more detailed discussion of the maximum switching frequency is provided in *Accurate Current Limit Operation and Maximum Switchign Frequency*.

$$R_T\ (k\Omega) = \frac{101756}{f sw\ (kHz)^{1.008}} \tag{7}$$

$$f sw\ (kHz) = \frac{92417}{RT\ (k\Omega)^{0.991}} \tag{8}$$

Feature Description (continued)

7.3.10 Accurate Current Limit Operation and Maximum Switchign Frequency

The TPS54340B-Q1 device implements peak-current-mode control in which the COMP-pin voltage controls the peak current of the high-side MOSFET. A signal proportional to the high-side switch current and the COMP pin voltage are compared each cycle. When the peak switch current intersects the COMP control voltage, the high-side switch turns off. During overcurrent conditions that pull the output voltage low, the error amplifier increases switch current by driving the COMP pin high. The error amplifier output is clamped internally at a level which sets the peak switch-current limit. The TPS54340B-Q1 device provides an accurate current limit threshold with a typical current limit delay of 60 ns. With smaller inductor values, the delay results in a higher peak inductor current. The relationship between the inductor value and the peak inductor current is shown in Figure 24.

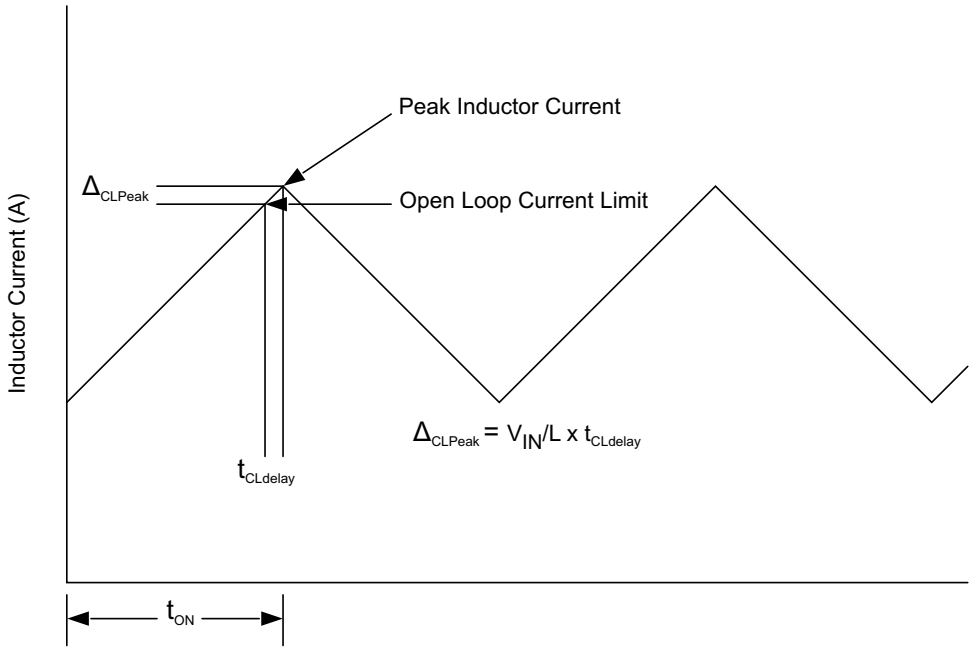

Figure 24. current limit Delay

To protect the converter in overload conditions at higher switching frequencies and input voltages, the TPS54340B-Q1 device implements a frequency foldback. The oscillator frequency is divided by 1, 2, 4, and 8 as the FB pin voltage falls from 0.8 V to 0 V. The TPS54340B-Q1 device uses a digital-frequency foldback to enable synchronization to an external clock during normal start-up and fault conditions. During short circuit events, the inductor current exceeds the peak current limit because of the high input voltage and the minimum-controllable on time. When the shorted load forces the output voltage low, the inductor current decreases slowly during the switch-off time. The frequency foldback effectively increases the off time by increasing the period of the switching cycle providing more time for the inductor current to ramp down.

With a maximum frequency-foldback ratio of 8, there is a maximum frequency at which the inductor current is controlled by frequency-foldback protection. Equation 10 calculates the maximum switching frequency at which the inductor current remains under control when V_{OUT} is forced to $V_{OUT(SC)}$. The selected operating frequency must not exceed the calculated value.

Equation 9 calculates the maximum switching-frequency limitation set by the minimum-controllable on time and the input-to-output step-down ratio. Setting the switching frequency above this value causes the regulator to skip switching pulses to achieve the low duty cycle required at maximum input voltage.

$$f_{SW(max\,skip)} = \frac{1}{t_{ON}} \times \left(\frac{I_O \times R_{dc} + V_{OUT} + V_d}{V_{IN} - I_O \times R_{DS(on)} + V_d} \right) \tag{9}$$

Copyright © 2017, Texas Instruments Incorporated

Feature Description (continued)

$$f_{SW(shift)} = \frac{f_{DIV}}{t_{ON}} \times \left(\frac{I_{CL} \times R_{dc} + V_{OUT(sc)} + V_d}{V_{IN} - I_{CL} \times R_{DS(on)} + V_d} \right)$$

where

- I_O is the output current
- I_{CL} is the current limit
- R_{dc} is the inductor resistance
- V_{IN} is the maximum input voltage
- V_{OUT} is the output voltage
- $V_{OUT(SC)}$ is the output voltage during short
- V_d is the diode voltage drop
- $R_{DS(on)}$ is the switch ON-resistance
- t_{ON} is the controllable ON-time
- f_{DIV} is the frequency divide equals (1, 2, 4, or 8) (10)

7.3.11 Synchronization to RT/CLK Pin

The RT/CLK pin receives a frequency-synchronization signal from an external system clock. To implement this synchronization feature connect a square wave to the RT/CLK pin through either circuit network shown in Figure 25. The square wave applied to the RT/CLK pin must switch lower than 0.5 V but higher than 1.7 V, and it must have a pulse-width greater than 15 ns. The synchronization frequency range is 160 kHz to 2300 kHz. The rising edge of the SW synchronizes to the falling edge of RT/CLK pin signal. The external synchronization circuit must be designed so that the default-frequency set-resistor is connected from the RT/CLK pin to ground when the synchronization signal is off. When using a low-impedance signal source, the frequency set resistor is connected in parallel with an AC-coupling capacitor to a termination resistor (for example 50 Ω) as shown in Figure 25. The two resistors in series provide the default-frequency setting resistance when the signal source is turned off. The sum of the resistance must set the switching frequency close to the external CLK frequency. TI recommends to AC-couple the synchronization signal through a 10-pF ceramic capacitor to RT/CLK pin.

The first time that the RT/CLK is pulled above the PLL threshold, the TPS54340B-Q1 device switches from the RT-resistor free-running frequency mode to the PLL-synchronized mode. The internal 0.5-V voltage source is removed and the RT/CLK pin becomes high impedance as the PLL begins to lock onto the external signal. The switching frequency can be higher or lower than the frequency set with the RT/CLK resistor. The device transitions from the resistor mode to the PLL mode and locks onto the external clock frequency within 78 µs. During the transition from the PLL mode to the resistor-programmed mode, the switching frequency falls to 150 kHz and then increases or decreases to the resistor programmed frequency when the 0.5-V bias voltage is reapplied to the RT/CLK resistor.

The switching frequency is divided by 8, 4, 2, and 1 as the FB pin voltage ramps from 0 to 0.8 V. The device implements a digital-frequency foldback to enable synchronizing to an external clock during normal start-up and fault conditions. Figure 26, Figure 27 and Figure 28 show the device synchronized to an external system clock in continuous-conduction mode (CCM), discontinuous-conduction mode (DCM), and pulse-skip mode (Eco-Mode).

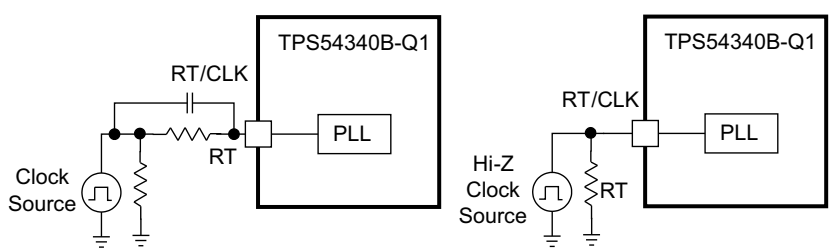

Copyright © 2016, Texas Instruments Incorporated

Figure 25. Synchronizing to a System Clock

Feature Description (continued)

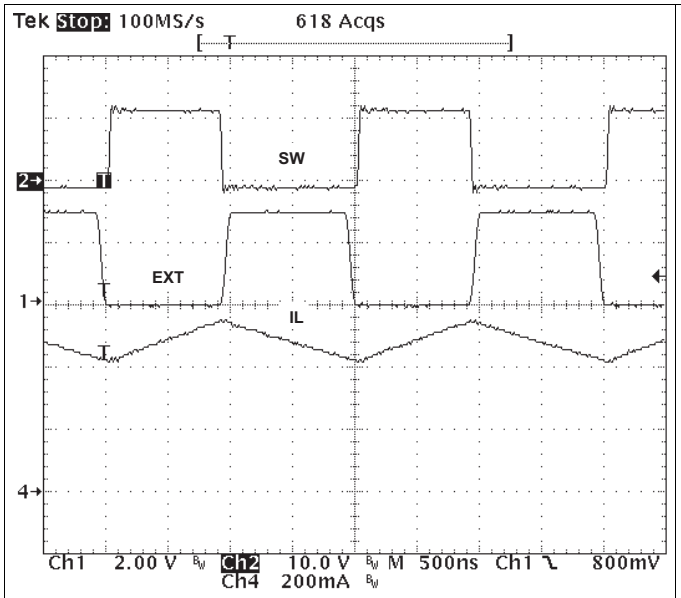

Figure 26. Plot of Synchronizing in CCM

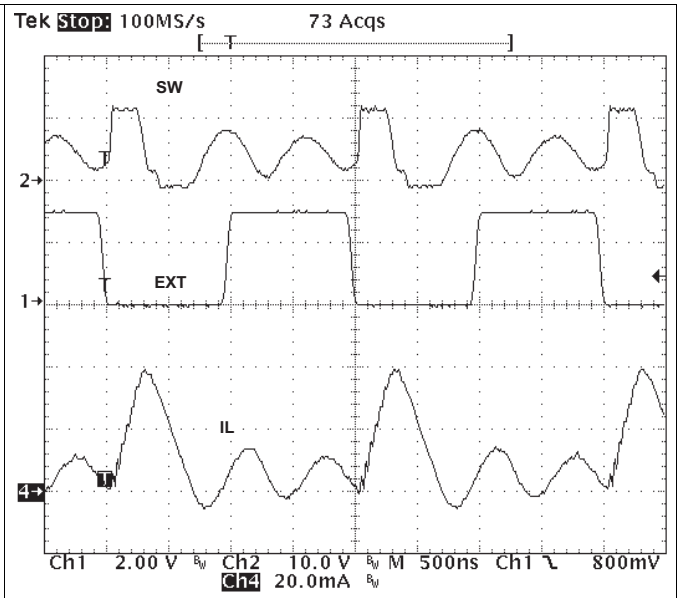

Figure 27. Plot of Synchronizing in DCM

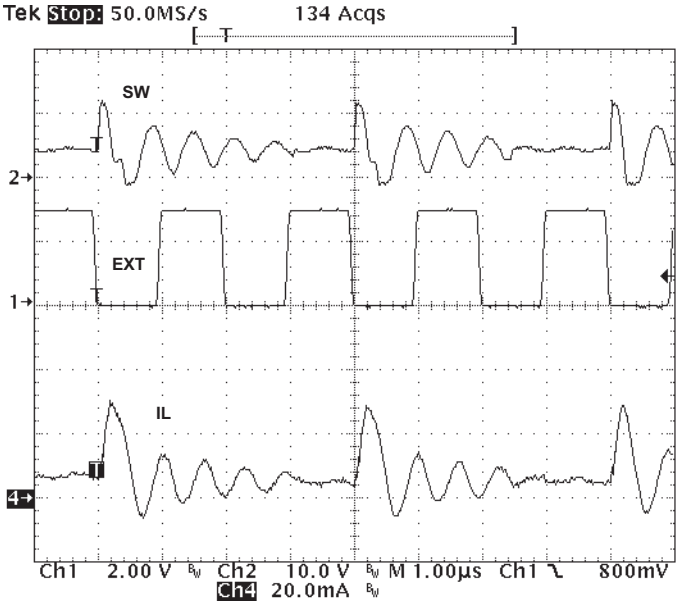

Figure 28. Plot of Synchronizing in Eco-Mode™

7.3.12 Overvoltage Protection

The TPS54340B-Q1 device incorporates an output-overvoltage-protection (OVP) circuit to minimize voltage overshoot when recovering from output fault conditions or strong unload transients in designs with low-output capacitance. For example, when the power-supply output is overloaded, the error amplifier compares the actual output voltage to the internal reference voltage. If the FB pin voltage is lower than the internal reference voltage for a considerable time, the output of the error amplifier increases to a maximum voltage corresponding to the peak current limit threshold. When the overload condition is removed, the regulator output rises and the error amplifier output transitions to the normal operating level. In some applications, the power-supply output voltage increases faster than the response of the error amplifier output resulting in an output overshoot.

Copyright © 2017, Texas Instruments Incorporated

Feature Description (continued)

The OVP feature minimizes output overshoot when using a low-value output capacitor by comparing the FB-pin voltage to the rising OVP threshold which is nominally 109% of the internal voltage reference. If the FB-pin voltage is greater than the rising OVP threshold, the high-side MOSFET is immediately disabled to minimize output overshoot. When the FB voltage drops below the falling OVP threshold, which is nominally 106% of the internal voltage reference, the high-side MOSFET resumes normal operation.

7.3.13 Thermal Shutdown

The TPS54340B-Q1 device provides an internal thermal shutdown to protect the device when the junction temperature exceeds 176°C. The high-side MOSFET stops switching when the junction temperature exceeds the thermal trip threshold. Once the die temperature falls to less than 164°C, the device reinitiates the power-up sequence controlled by the internal soft-start circuitry.

7.3.14 Small-Signal Model for Loop Response

Figure 29 shows an equivalent model for the TPS54340B-Q1 control loop, which is simulated to check the frequency response and dynamic load response. The error amplifier is a transconductance amplifier with a gm_{EA} of 3350 μA/V. The error amplifier is modeled using an ideal voltage-controlled current source. The resistor R_o and capacitor C_o model the open-loop gain and frequency response of the amplifier. The 1-mV AC-voltage source between the nodes a and b effectively breaks the control loop for the frequency response measurements. Plotting c/a provides the small-signal response of the frequency compensation. Plotting a/b provides the small-signal response of the overall loop. The dynamic loop response is evaluated by replacing R_L with a current source with the appropriate load-step amplitude and step rate in a time-domain analysis. This equivalent model is only valid for continuous conduction mode (CCM) operation.

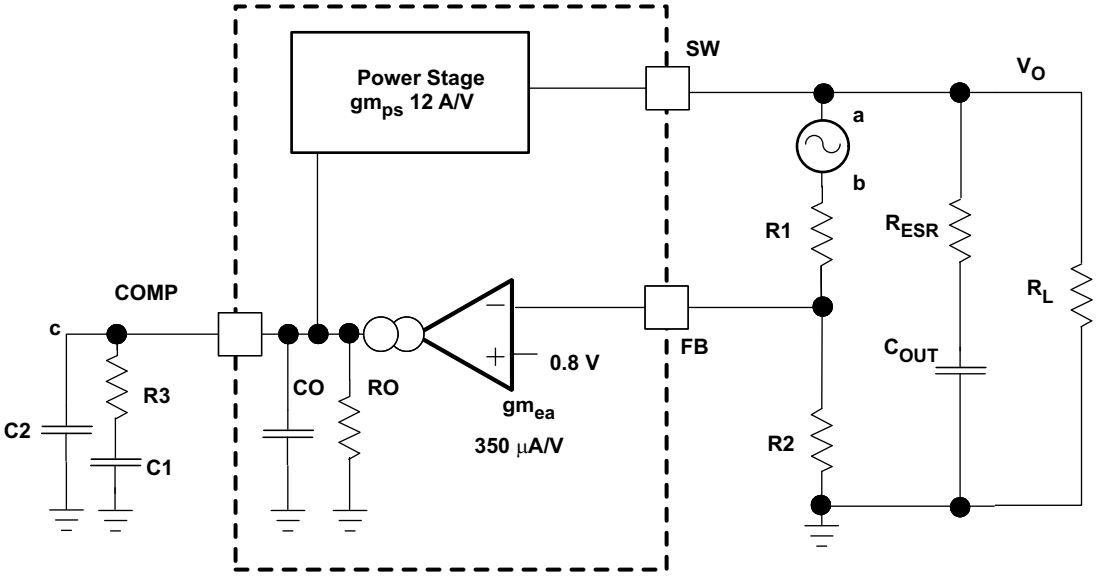

Copyright © 2016, Texas Instruments Incorporated

Figure 29. Small-Signal Model for Loop Response

7.3.15 Simple Small-Signal Model for Peak-Current-Mode Control

Figure 30 describes a simple small-signal model that is used to design the frequency compensation. The TPS54340B-Q1 power stage is approximated by a voltage-controlled current source (duty cycle modulator) supplying current to the output capacitor and load resistor. The control-to-output transfer function is shown in Equation 11 and consists of a DC gain, one dominant pole, and one ESR zero. The quotient of the change in switch current and the change in COMP-pin voltage (node c in Figure 29) is the power-stage transconductance, gm_{PS}. The gm_{PS} for the TPS54340B-Q1 device is 12 A/V. The low-frequency gain of the power stage is the product of the transconductance and the load resistance as shown in Equation 12.

Feature Description (continued)

As the load current increases and decreases, the low-frequency gain decreases and increases, respectively. This variation with the load is problematic at first glance, but fortunately the dominant pole moves with the load current (see Equation 13). The combined effect is highlighted by the dashed line in the right half of Figure 30. As the load current decreases, the gain increases and the pole frequency lowers, which keeps the 0-dB crossover frequency the same as load conditions vary. The type of output capacitor chosen determines whether the ESR zero has a profound effect on the frequency compensation design. Because the phase margin is increased by the ESR zero of the output capacitor (see Equation 14), the use of high-ESR aluminum-electrolytic capacitors reduces the number frequency compensation components required to stabilize the overall loop.

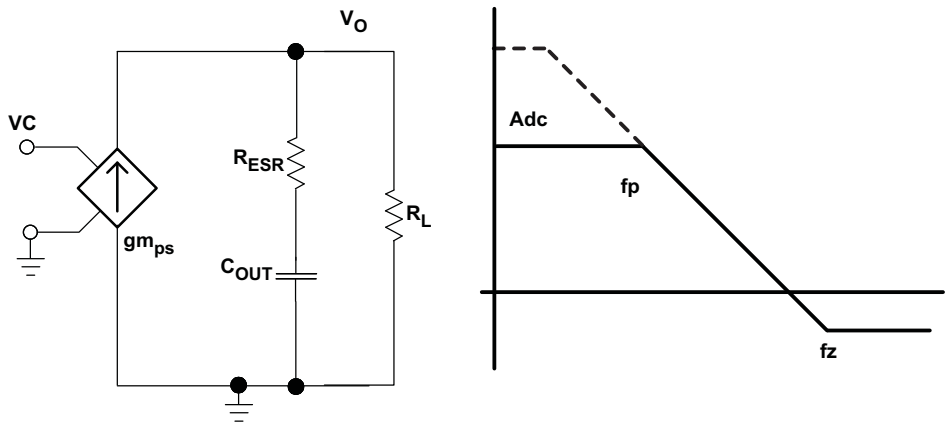

Figure 30. Simple Small-Signal Model and Frequency Response for Peak-Current-Mode Control

$$\frac{V_{OUT}}{V_C} = Adc \times \frac{\left(1 + \frac{s}{2\pi \times f_Z}\right)}{\left(1 + \frac{s}{2\pi \times f_P}\right)} \tag{11}$$

$$Adc = gm_{ps} \times R_L \tag{12}$$

$$f_P = \frac{1}{C_{OUT} \times R_L \times 2\pi} \tag{13}$$

$$f_Z = \frac{1}{C_{OUT} \times R_{ESR} \times 2\pi} \tag{14}$$

7.3.16 Small-Signal Model for Frequency Compensation

The TPS54340B-Q1 device uses a transconductance amplifier for the error amplifier and supports three of the commonly-used frequency-compensation circuits. The compensation circuits, Type 2A, Type 2B, and Type 1, are shown in Figure 31. Type 2 circuits are typically implemented in high-bandwidth power-supply designs using low -ESR output capacitors. The Type 1 circuit is used with power-supply designs with high-ESR aluminum-electrolytic or tantalum capacitors. Equation 15 and Equation 16 relate the frequency response of the amplifier to the small-signal model in Figure 31. The open-loop gain and bandwidth are modeled using the R_O and C_O shown in Figure 31. See *Application and Implementation* for a design example using a Type-2A network with a low-ESR output capacitor.

Equation 15 through Equation 24 are provided as a reference. An alternative is to use WEBENCH software tools to create a design based on the power supply requirements.

Copyright © 2017, Texas Instruments Incorporated

Feature Description (continued)

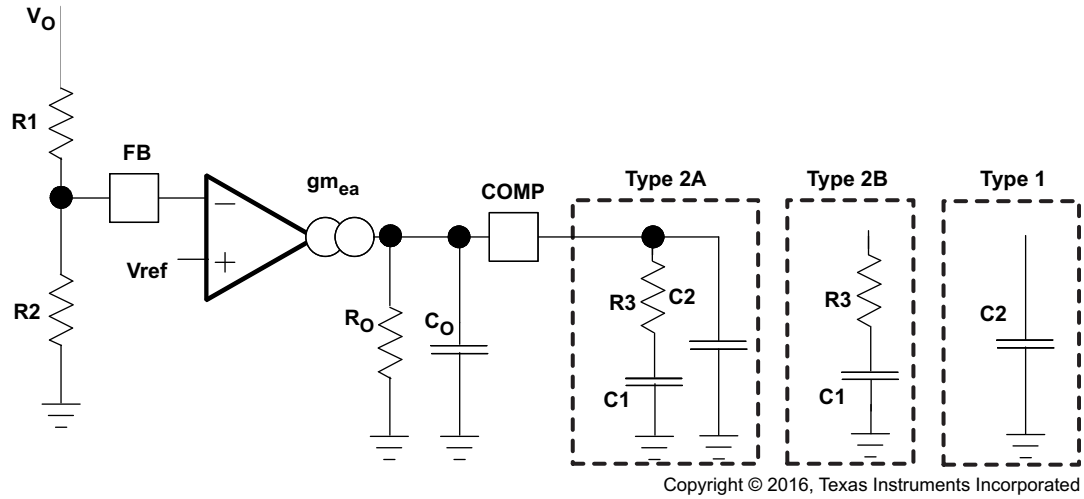

Figure 31. Types of Frequency Compensation

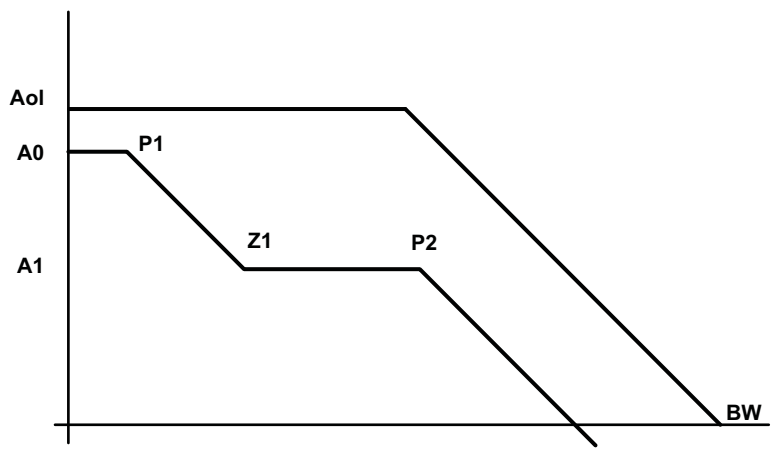

Figure 32. Frequency Response of the Type-2A and Type-2B Frequency Compensation

$$Ro = \frac{Aol(V/V)}{gm_{ea}} \tag{15}$$

$$C_O = \frac{gm_{ea}}{2\pi \times BW\ (Hz)} \tag{16}$$

$$EA = A0 \times \frac{\left(1 + \frac{s}{2\pi \times f_{Z1}}\right)}{\left(1 + \frac{s}{2\pi \times f_{P1}}\right) \times \left(1 + \frac{s}{2\pi \times f_{P2}}\right)} \tag{17}$$

$$A0 = gm_{ea} \times Ro \times \frac{R2}{R1 + R2} \tag{18}$$

$$A1 = gm_{ea} \times Ro|\,|\,R3 \times \frac{R2}{R1 + R2} \tag{19}$$

$$P1 = \frac{1}{2\pi \times Ro \times C1} \tag{20}$$

Feature Description (continued)

$$Z1 = \frac{1}{2\pi \times R3 \times C1} \tag{21}$$

$$P2 = \frac{1}{2\pi \times R3 \,||\, R_O \times (C2 + C_O)} \text{ type 2a} \tag{22}$$

$$P2 = \frac{1}{2\pi \times R3 \,||\, R_O \times C_O} \text{ type 2b} \tag{23}$$

$$P2 = \frac{1}{2\pi \times R_O \times (C2 + C_O)} \text{ type 1} \tag{24}$$

7.4 Device Functional Modes

The TPS54340B-Q1 device is designed to operate with input voltages above 4.5 V. When the VIN voltage is above the 4.3 V, typical rising UVLO threshold and the EN voltage is above the 1.2 V typical threshold the device is active. If the VIN voltage falls below the typical 4-V UVLO turnoff threshold, the device stops switching. If the EN voltage falls below the 1.2-V threshold, the device stops switching and enters a shutdown mode with low supply current of 2 µA typical.

The TPS54340B-Q1 device will operate in CCM when the output current is enough to keep the inductor current above 0 A at the end of each switching period. As a nonsynchronous converter, it will enter DCM at low-output currents when the inductor current falls to 0 A before the end of a switching period. At very low-output current, the COMP voltage will drop to the pulse-skipping threshold, and the device operates in a pulse-skipping Eco-mode. In this mode, the high-side MOSFET does not switch every switching period. This operating mode reduces power loss while regulating the output voltage. For more information on Eco-mode see the *Pulse Skip Eco-mode™* section.

Copyright © 2017, Texas Instruments Incorporated

8 Application and Implementation

NOTE

Information in the following applications sections is not part of the TI component specification, and TI does not warrant its accuracy or completeness. TI's customers are responsible for determining suitability of components for their purposes. Customers should validate and test their design implementation to confirm system functionality.

8.1 Application Information

The TPS54340B-Q1 device is a 42-V, 3.5-A, step-down regulator with an integrated high-side MOSFET. This device is typically used to convert a higher DC voltage to a lower DC voltage with a maximum available output current of 3.5 A. Example applications are: 12 V and 24 V industrial, automotive, and communications power systems. Use the following design procedure to select component values for the TPS54340B-Q1 device. This procedure illustrates the design of a high-frequency switching regulator using ceramic output capacitors. Calculations can be done with the excel spreadsheet (SLVC452) located on the product page.

8.2 Typical Applications

8.2.1 Buck Converter With 6-V to 42-V Input and 3.3-V at 3.5-A Output

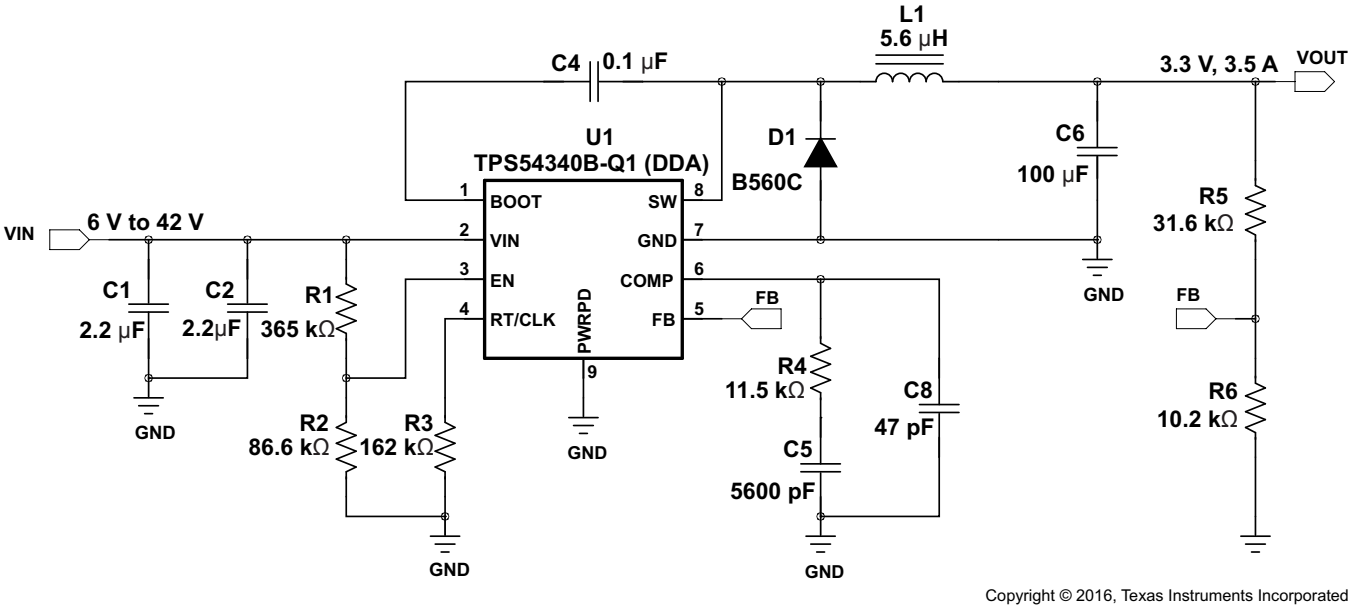

Figure 33. 3.3-V Output TPS54340B-Q1 Design Example

8.2.1.1 Design Requirements

To start the design process, a few parameters must be known. These requirements are typically determined at the system level. Table 1 shows the design parameters for this example.

Typical Applications (continued)

Table 1. Design Parameters

DESIGN PARAMETER	EXAMPLE VALUE
Output voltage	3.3 V
Transient response 0.875-A to 2.625 A-load step	ΔV_{OUT} = 4 %
Maximum output current	3.5 A
Input voltage	12 V nominal, 6 V to 42 V
Output voltage ripple	0.5% of V_{OUT}
Start Input voltage (rising VIN)	5.75 V
Stop Input Voltage (falling VIN)	4.5 V

8.2.1.2 Detailed Design Procedure

8.2.1.2.1 Selecting the Switching Frequency

The first step is to choose a switching frequency for the regulator. Typically, the designer uses the highest switching frequency possible, because this produces the smallest solution size. High switching frequency allows for lower-value inductors and smaller output capacitors compared to a power supply that switches at a lower frequency. The switching frequency that can be selected is limited by the minimum on-time of the internal power switch, the input voltage, the output voltage, and the frequency-foldback protection.

Equation 9 and Equation 10 calculate the upper limit of the switching frequency for the regulator. Choose the lower value result from the two equations. Switching frequencies higher than these values results in pulse skipping or the lack of overcurrent protection during a short circuit.

The typical minimum on time, t_{onmin}, is 135 ns for the TPS54340B-Q1. For this example, the output voltage is 3.3 V and the maximum input voltage is 42 V, which allows for a maximum switch frequency up to 712 kHz to avoid pulse skipping from Equation 9. To ensure overcurrent runaway is not a concern during short circuits use Equation 10 to determine the maximum switching frequency for frequency-foldback protection. With a maximum input voltage of 42 V, assuming a diode voltage of 0.7 V, inductor resistance of 21 mΩ, switch resistance of 92 mΩ, a current limit value of 4.7 A, and short circuit output voltage of 0.1 V, the maximum switching frequency is 1260 kHz.

For this design, a lower switching frequency of 600 kHz is chosen to operate comfortably below the calculated maximums. To determine the timing resistance for a given switching frequency, use Equation 7 or the curve in Figure 6. The switching frequency is set by resistor R_3 shown in Figure 33. For 600 kHz operation, the closest standard value resistor is 162 kΩ.

$$f_{SW(max\,skip)} = \frac{1}{135ns} \times \left(\frac{3.5\text{ A x }21\text{ m}\Omega + 3.3\text{ V} + 0.7\text{ V}}{42\text{ V} - 3.5\text{ A x }92\text{ m}\Omega + 0.7\text{ V}}\right) = 712\text{ kHz} \tag{25}$$

$$f_{SW(shift)} = \frac{8}{135\text{ ns}} \times \left(\frac{4.7\text{ A x }21\text{ m}\Omega + 0.1\text{ V} + 0.7\text{ V}}{42\text{ V} - 4.7\text{ A x }92\text{ m}\Omega + 0.7\text{ V}}\right) = 1260\text{ kHz} \tag{26}$$

$$RT\ (k\Omega) = \frac{101756}{600\ (kHz)^{1.008}} = 161\ k\Omega \tag{27}$$

8.2.1.2.2 Output Inductor Selection (L_O)

To calculate the minimum value of the output inductor, use Equation 28.

K_{IND} is a ratio that represents the amount of inductor ripple current relative to the maximum output current. The inductor ripple current is filtered by the output capacitor. Therefore, choosing high inductor ripple currents impacts the selection of the output capacitor because the output capacitor must have a ripple-current rating equal to or greater than the inductor ripple current. In general, the inductor ripple value is at the discretion of the designer, however, the following guidelines can be used.

Copyright © 2017, Texas Instruments Incorporated

For designs using low-ESR output capacitors such as ceramics, a value as high as K_{IND} = 0.3 is desirable. When using higher ESR output capacitors, K_{IND} = 0.2 yields better results. Because the inductor ripple current is part of the current-mode PWM-control system, the inductor ripple current must always be greater than 150 mA for stable PWM operation. In a wide input voltage regulator, the best choice is a relatively large inductor ripple current which provides sufficient ripple current with the input voltage at the minimum.

For this design example, K_{IND} = 0.3 and the minimum inductor value is calculated to be 4.8 µH. The nearest standard value is 5.6 µH. Not exceeding the RMS current and saturation current ratings of the inductor is important. The RMS and peak inductor current are determined by Equation 30 and Equation 31. For this design, the RMS inductor current is 3.5 A and the peak inductor current is 3.95 A. The chosen inductor is a WE 7443552560, which has a saturation current rating of 7.5 A and an RMS current rating of 6.7 A.

As the equation set demonstrates, lower ripple currents reduce the output voltage ripple of the regulator but require a larger value of inductance. Selecting higher ripple currents increases the output-voltage ripple of the regulator but allow for a lower inductance value.

The current flowing through the inductor is the inductor ripple current plus the output current. During power up, faults, or transient load conditions, the inductor current can increase above the peak inductor current level calculated above. In transient conditions, the inductor current increases up to the switch current limit of the device. For this reason, the most conservative design approach is to choose an inductor with a saturation current rating equal to or greater than the switch current limit of the TPS54340B-Q1, which is nominally 5.5 A.

$$L_{O(min)} = \frac{V_{IN(max)} - V_{OUT}}{I_{OUT} \times K_{IND}} \times \frac{V_{OUT}}{V_{IN(max)} \times f_{SW}} = \frac{42\ V\ -\ 3.3\ V}{3.5\ A\ x\ 0.3} \times \frac{3.3\ V}{42\ V\ \times\ 600\ kHz} = 4.8\ \mu H \tag{28}$$

$$I_{RIPPLE} = \frac{V_{OUT} \times (V_{IN(max)} - V_{OUT})}{V_{IN(max)} \times L_O \times f_{SW}} = \frac{3.3\ V\ x\ (42\ V\ -\ 3.3\ V)}{42\ V\ x\ 5.6\ \mu H\ x\ 600\ kHz} = 0.905\ A \tag{29}$$

$$I_{L(rms)} = \sqrt{(I_{OUT})^2 + \frac{1}{12} \times \left(\frac{V_{OUT} \times \left(V_{IN(max)} - V_{OUT}\right)}{V_{IN(max)} \times L_O \times f_{SW}}\right)^2} = \sqrt{(3.5\ A)^2 + \frac{1}{12} \times \left(\frac{3.3\ V\ \times\ (42\ V\ -\ 3.3\ V)}{42\ V\ \times\ 5.6\ \mu H\ \times\ 600\ kHz}\right)^2} = 3.5\ A \tag{30}$$

$$I_{L(peak)} = I_{OUT} + \frac{I_{RIPPLE}}{2} = 3.5\ A + \frac{0.905\ A}{2} = 3.95\ A \tag{31}$$

8.2.1.2.3 Output Capacitor

There are three primary considerations for selecting the value of the output capacitor. The output capacitor determines the modulator pole, the output voltage ripple, and how the regulator responds to a large change in load current. The output capacitance must be selected based on the most stringent of these three criteria.

The desired response to a large change in the load current is the first criteria. The output capacitor must supply the increased load current until the regulator responds to the load step. The regulator does not respond immediately to a large, fast increase in the load current such as transitioning from no load to a full load. The regulator generally requires two or more clock cycles for the control loop to sense the change in output voltage and adjust the peak switch current in response to the higher load. The output capacitance must be large enough to supply the difference in current for two clock cycles to maintain the output voltage within the specified range. Equation 32 shows the minimum output capacitance necessary, where ΔI_{OUT} is the change in output current, f_{SW} is the regulators switching frequency and ΔV_{OUT} is the allowable change in the output voltage. For this example, the transient load response is specified as a 4% change in V_{OUT} for a load step from 0.875 A to 2.625 A. Therefore, ΔI_{OUT} is 2.625 A – 0.875 A = 1.75 A and ΔV_{OUT} = 0.04 × 3.3 = 0.13 V. Using these numbers gives a minimum capacitance of 44.9 µF. This value does not take the ESR of the output capacitor into account in the output voltage change. For ceramic capacitors, the ESR is usually small enough to be ignored. Aluminum-electrolytic and tantalum capacitors have higher ESR that must be included in load step calculations.

The output capacitor must also be sized to absorb energy stored in the inductor when transitioning from a high-to-low load current. The catch diode of the regulator does not sink current so energy stored in the inductor produces an output-voltage overshoot when the load current rapidly decreases. A typical load-step response is shown in Figure 34. The excess energy absorbed in the output capacitor increases the voltage on the capacitor. The capacitor must be sized to maintain the desired output voltage during these transient periods. Equation 33 calculates the minimum capacitance required to keep the output voltage overshoot to a desired value, where L_O is the value of the inductor, I_{OH} is the output current under heavy load, I_{OL} is the output under light load, V_f is the peak output voltage, and V_I is the initial voltage. For this example, the worst-case load step is from 2.625 A to 0.875 A. The output voltage increases during this load transition, and the stated maximum in our specification is 4% of the output voltage, which makes V_f = 1.04 × 3.3 = 3.432. V_I is the initial capacitor voltage, which is the nominal output voltage of 3.3 V. Using these numbers in Equation 33 yields a minimum capacitance of 38.6 µF.

Equation 34 calculates the minimum output capacitance needed to meet the output voltage ripple specification, where f_{SW} is the switching frequency, $V_{ORIPPLE}$ is the maximum allowable output voltage ripple, and I_{RIPPLE} is the inductor ripple current. Equation 34 yields 11.4 µF.

Equation 35 calculates the maximum ESR an output capacitor can have to meet the output voltage ripple specification. Equation 35 indicates the ESR must be less than 18 mΩ.

The most stringent criteria for the output capacitor is 44.9 µF required to maintain the output voltage within regulation tolerance during a load transient.

Capacitance deratings for aging, temperature, and DC bias increases this minimum value. For this example, 100-µF ceramic capacitors with 5 mΩ of ESR is used. The derated capacitance is 70 µF, which is well above the minimum required capacitance of 44.9 µF.

Capacitors are generally rated for a maximum ripple current that can be filtered without degrading capacitor reliability. Some capacitor data sheets specify the Root Mean Square (RMS) value of the maximum ripple current. Equation 36 calculates the RMS ripple current that the output capacitor must support. For this example, Equation 36 yields 261 mA.

$$C_{OUT} > \frac{2 \times \Delta I_{OUT}}{f_{SW} \times \Delta V_{OUT}} = \frac{2 \times 1.75\ \text{A}}{600\ \text{kHz x } 0.13\ \text{V}} = 44.9\ \mu\text{F} \tag{32}$$

$$C_{OUT} > L_O \text{ x } \frac{\left((I_{OH})^2 - (I_{OL})^2\right)}{\left((V_f)^2 - (V_I)^2\right)} = 5.6\ \mu\text{H x } \frac{\left(2.625\ \text{A}^2 - 0.875\ \text{A}^2\right)}{\left(3.432\ \text{V}^2 - 3.3\ \text{V}^2\right)} = 38.6\ \mu\text{F} \tag{33}$$

$$C_{OUT} > \frac{1}{8 \times f_{SW}} \times \frac{1}{\left(\frac{V_{ORIPPLE}}{I_{RIPPLE}}\right)} = \frac{1}{8 \text{ x } 600\ \text{kHz}} \text{ x } \frac{1}{\left(\frac{16.5\ \text{mV}}{0.905\ \text{A}}\right)} = 11.4\ \mu\text{F} \tag{34}$$

$$R_{ESR} < \frac{V_{ORIPPLE}}{I_{RIPPLE}} = \frac{16.5\ \text{mV}}{0.905\ \text{A}} = 18\ \text{m}\Omega \tag{35}$$

$$I_{COUT(rms)} = \frac{V_{OUT} \times \left(V_{IN(max)} - V_{OUT}\right)}{\sqrt{12} \times V_{IN(max)} \times L_O \times f_{SW}} = \frac{3.3\ \text{V} \times (42\ \text{V} - 3.3\ \text{V})}{\sqrt{12} \times 42\ \text{V} \times 5.6\ \mu\text{H} \times 600\ \text{kHz}} = 261\ \text{mA} \tag{36}$$

8.2.1.2.4 Catch Diode

The TPS54340B-Q1 device requires an external catch diode between the SW pin and GND. The selected diode must have a reverse voltage rating equal to or greater than $V_{IN(max)}$. The peak current rating of the diode must be greater than the maximum inductor current. Schottky diodes are typically a good choice for the catch diode due to their low forward voltage. The lower the forward voltage of the diode, the higher the efficiency of the regulator.

Typically, diodes with higher voltage and current ratings have higher forward voltages. A diode with a minimum of 42-V reverse voltage is preferred to allow input voltage transients up to the rated voltage of the TPS54340B-Q1 device.

For the example design, the B560C-13-F Schottky diode is selected for its lower forward voltage and good thermal characteristics compared to smaller devices. The typical forward voltage of the B560C-13-F is 0.70 V at 5 A.

Copyright © 2017, Texas Instruments Incorporated

The diode must also be selected with an appropriate power rating. The diode conducts the output current during the off-time of the internal power switch. The off-time of the internal switch is a function of the maximum input voltage, the output voltage, and the switching frequency. The output current during the off-time is multiplied by the forward voltage of the diode to calculate the instantaneous conduction losses of the diode. At higher switching frequencies, the AC losses of the diode must be taken into account. The AC losses of the diode are due to the charging and discharging of the junction capacitance and reverse recovery charge. Equation 37 is used to calculate the total power dissipation, including conduction losses and AC losses of the diode.

The B560C-13-F diode has a junction capacitance of 300 pF. Using Equation 37, the total loss in the diode is 2.42 W.

If the power supply spends a significant amount of time at light load currents or in sleep mode, consider using a diode which has a low leakage current and slightly higher forward voltage drop.

$$P_D = \frac{\left(V_{IN(max)} - V_{OUT}\right) \times I_{OUT} \times Vfd}{V_{IN(max)}} + \frac{C_j \times f_{SW} \times \left(V_{IN} + Vfd\right)^2}{2} =$$

$$\frac{(42\ V\ -\ 3.3\ V) \times 3.5\ A \times 0.7\ V}{42\ V} + \frac{300\ pF \times 600\ kHz \times (42\ V\ +\ 0.7\ V)^2}{2} = 2.42\ W \tag{37}$$

8.2.1.2.5 Input Capacitor

The TPS54340B-Q1 device requires a high-quality ceramic-type X5R or X7R input-decoupling capacitor with at least 3 µF of effective capacitance. Some applications benefit from additional bulk capacitance. The effective capacitance includes any loss of capacitance due to DC-bias effects. The voltage rating of the input capacitor must be greater than the maximum input voltage. The capacitor must also have a ripple-current rating greater than the maximum input current ripple of the TPS54340B-Q1 device. Equation 38 calculates the input ripple current.

The value of a ceramic capacitor varies significantly with temperature and the DC bias applied to the capacitor. Selecting a dielectric material that is more stable overtemperature minimizes capacitance variations due to temperature. X5R and X7R ceramic dielectrics are generally selected for switching regulator capacitors, because they have a high capacitance-to-volume ratio and are fairly stable over temperature. The input capacitor must also be selected with consideration for the DC bias. The effective value of a capacitor decreases as the DC bias across a capacitor increases.

For this example design, a ceramic capacitor with at least a 42-V voltage rating is required to support the maximum input voltage. Common-standard ceramic-capacitor voltage ratings include 4 V, 6.3 V, 10 V, 16 V, 25 V, 50 V, or 100 V. For this example, two 2.2-µF, 100-V capacitors in parallel are used. Table 2 shows several choices of high voltage capacitors.

The input capacitance value determines the input ripple voltage of the regulator. Equation 39 calculates the input voltage ripple. Using the design example values, I_{OUT} = 3.5 A, C_{IN} = 4.4 µF, f_{SW} = 600 kHz, yields an input voltage ripple of 331 mV and a RMS input ripple current of 1.74 A.

$$I_{CI(rms)} = I_{OUT}\ x \sqrt{\frac{V_{OUT}}{V_{IN(min)}}\ x\ \frac{\left(V_{IN(min)} - V_{OUT}\right)}{V_{IN(min)}}} = 3.5\ A \sqrt{\frac{3.3\ V}{6\ V} \times \frac{(6\ V\ -\ 3.3\ V)}{6\ V}} = 1.74\ A \tag{38}$$

$$\Delta V_{IN} = \frac{I_{OUT} \times 0.25}{C_{IN} \times f_{SW}} = \frac{3.5\ A \times 0.25}{4.4\ \mu F \times 600\ kHz} = 331\ mV \tag{39}$$

Table 2. Capacitor Types

VENDOR	VALUE (µF)	EIA SIZE	VOLTAGE (V)	DIALECTRIC	COMMENTS
Murata	1 to 2.2	1210	100	X7R	GRM32 series
	1 to 4.7		50		
	1	1206	100		GRM31 series
	1 to 2.2		50		
Vishay	1 to 1.8	2220	50		VJ X7R series
	1 to 1.2		100		
	1 to 3.9	2225	50		
	1 to 1.8		100		
TDK	1 to 2.2	1812	100		C series C4532
	1.5 to 6.8		50		
	1 to 2.2	1210	100		C series C3225
	1 to 3.3		50		
AVX	1 to 4.7	1210	50		X7R dielectric series
	1		100		
	1 to 4.7	1812	50		
	1 to 2.2		100		

8.2.1.2.6 Bootstrap-Capacitor Selection

A 0.1-µF ceramic capacitor must be connected between the BOOT and SW pins for proper operation. TI recommends a ceramic capacitor with X5R or better grade dielectric. The capacitor should have a 10-V or higher voltage rating.

8.2.1.2.7 Undervoltage Lockout Set Point

The Undervoltage Lockout (UVLO) is adjusted using an external voltage divider on the EN pin of the TPS54340B-Q1 device. The UVLO has two thresholds, one for power up when the input voltage is rising, and one for power-down or brown-outs when the input voltage is falling. For the example design, the supply turns on and starts switching once the input voltage increases above 5.75 V (UVLO start). After the regulator starts switching, it should continue to do so until the input voltage falls below 4.5 V (UVLO stop).

Programmable UVLO-threshold voltages are set using the resistor divider of R_{UVLO1} and R_{UVLO2} between VIN and ground connected to the EN pin. Equation 4 and Equation 5 calculate the necessary resistance values. For the example application, a 365 kΩ between VIN and EN (R_{UVLO1}) and a 86.6 kΩ between EN and ground (R_{UVLO2}) are required to produce the 8-V and 6.25-V start and stop voltages.

$$R_{UVLO1} = \frac{V_{START} - V_{STOP}}{I_{HYS}} = \frac{5.75\ V - 4.5\ V}{3.4\ \mu A} = 368\ k\Omega \tag{40}$$

$$R_{UVLO2} = \frac{V_{ENA}}{\frac{V_{START} - V_{ENA}}{R_{UVLO1}} + I_1} = \frac{1.2\ V}{\frac{5.75\ V - 1.2\ V}{365\ k\Omega} + 1.2\ \mu A} = 87.8\ k\Omega \tag{41}$$

8.2.1.2.8 Output Voltage and Feedback Resistors Selection

The voltage divider of R5 and R6 sets the output voltage. For the example design, 10.2 kΩ was selected for R6. Using Equation 3, R5 is calculated as 31.9 kΩ. The nearest standard 1% resistor is 31.6 kΩ. Because of the input current of the FB pin, the current flowing through the feedback network must be greater than 1 µA to maintain the output voltage accuracy. This requirement is satisfied if the value of R6 is less than 800 kΩ. Choosing higher resistor values decreases quiescent current and improves efficiency at low-output currents but can also introduce noise immunity problems.

$$R_{HS} = R_{LS} \times \frac{V_{OUT} - 0.8\ V}{0.8\ V} = 10.2\ k\Omega \times \left(\frac{3.3\ V - 0.8\ V}{0.8\ V}\right) = 31.9\ k\Omega \tag{42}$$

Copyright © 2017, Texas Instruments Incorporated

8.2.1.2.9 Minimum V_{IN}

To ensure proper operation of the device and to keep the output voltage in regulation, the input voltage at the device must be above the value calculated with Equation 43 . Using the typical values for the $R_{DS(on)}$, R_{DC}, and V_F in this application example, the minimum input voltage is 3.83 V. The BOOT-SW = 3 V curve in Figure 1 was used for $R_{DS(on)}$ = 0.12 Ω because the device will be operating with low drop out. When operating with low dropout, the BOOT-SW voltage is regulated at a lower voltage because the BOOT-SW capacitor is not refreshed every switching cycle. In the final application, the values of $R_{DS(on)}$, R_{DC}, and V_F used in this equation must include tolerance of the component specifications and the variation of these specifications at their maximum operating temperature in the application.

In this application example the calculated minimum input voltage is near the input voltage UVLO for the TPS54340B-Q1 so the device may turn off before going into drop out.

$$V_{IN}(\min) = \frac{V_{OUT} + V_F + R_{dc} \times I_{OUT}}{0.99} + R_{DS}(on) \times I_{OUT} - V_F$$

$$V_{IN}(\min) = \frac{3.3V + 0.5V + 0.0206\Omega \times 3.5A}{0.99} + 0.12\Omega \times 3.5A - 0.5V = 3.83V \quad (43)$$

8.2.1.2.10 Compensation

There are several methods to design compensation for DC-DC regulators. The method presented here is easy to calculate and ignores the effects of the slope compensation that is internal to the device. Because the slope compensation is ignored, the actual crossover frequency is lower than the crossover frequency used in the calculations. This method assumes the crossover frequency is between the modulator pole and the ESR zero and the ESR zero is at least 10-times greater the modulator pole.

To get started, the modulator pole, $f_{p(mod)}$, and the ESR zero, f_{z1}, must be calculated using Equation 44 and Equation 45. For C_{OUT}, use a derated value of 70 µF. Use equations Equation 46 and Equation 47 to estimate a starting point for the crossover frequency, f_{co}. For the example design, $f_{p(mod)}$ is 2411 Hz and $f_{z(mod)}$ is 455 kHz. Equation 45 is the geometric mean of the modulator pole and the ESR zero and Equation 47 is the mean of modulator pole and the switching frequency. Equation 46 yields 33.1 kHz and Equation 47 gives 26.9 kHz. Use the lower value of Equation 46 or Equation 47 for an initial crossover frequency. For this example, the target f_{co} is 26.9 kHz.

Next, the compensation components are calculated. A resistor in series with a capacitor is used to create a compensating zero. A capacitor in parallel to these two components forms the compensating pole.

$$f_{P(mod)} = \frac{I_{OUT(max)}}{2 \times \pi \times V_{OUT} \times C_{OUT}} = \frac{3.5\ A}{2 \times \pi \times 3.3\ V \times 70\ \mu F} = 2411\ Hz \quad (44)$$

$$f_{Z(mod)} = \frac{1}{2 \times \pi \times R_{ESR} \times C_{OUT}} = \frac{1}{2 \times \pi \times 5\ m\Omega \times 70\ \mu F} = 455\ kHz \quad (45)$$

$$f_{co} = \sqrt{f_{p(mod)} \times f_{z(mod)}} = \sqrt{2411\ Hz \times 455\ kHz} = 33.1\ kHz \quad (46)$$

$$f_{co} = \sqrt{f_{p(mod)} \times \frac{f_{SW}}{2}} = \sqrt{2411\ Hz \times \frac{600\ kHz}{2}} = 26.9\ kHz \quad (47)$$

To determine the compensation resistor, R4, use Equation 48. Assume the power-stage transconductance, gmps, is 12 A/V. The output voltage, V_O, reference voltage, V_{REF}, and amplifier transconductance, gmea, are 5 V, 0.8 V, and 350 µA/V, respectively. R4 is calculated as 11.6 kΩ, and a standard value of 11.5 kΩ is selected. Use Equation 49 to set the compensation zero to the modulator pole frequency. Equation 49 yields 5740 pF for compensating capacitor C5. 5600 pF is used for this design.

$$R4 = \left(\frac{2 \times \pi \times f_{co} \times C_{OUT}}{gmps}\right) \times \left(\frac{V_{OUT}}{V_{REF} \times gmea}\right) = \left(\frac{2 \times \pi \times 26.9\ kHz \times 70\ \mu F}{12\ A/V}\right) \times \left(\frac{3.3\ V}{0.8\ V \times 350\ \mu A/V}\right) = 11.6\ k\Omega \quad (48)$$

$$C5 = \frac{1}{2 \times \pi \times R4 \times f_{p(mod)}} = \frac{1}{2 \times \pi \times 11.5\ k\Omega \times 2411\ Hz} = 5740\ pF \quad (49)$$

A compensation pole is implemented if desired by adding capacitor C8 in parallel with the series combination of R4 and C5. Use the larger value calculated from Equation 50 and Equation 51 for C8 to set the compensation pole. The selected value of C8 is 47 pF for this design example.

$$C8 = \frac{C_{OUT} \text{ x } R_{ESR}}{R4} = \frac{70\ \mu F \text{ x } 5\ m\Omega}{11.5\ k\Omega} = 30.4\ pF \tag{50}$$

$$C8 = \frac{1}{R4 \text{ x } f_{sw} \text{ x } \pi} = \frac{1}{11.5\ k\Omega \text{ x } 600\ kHz \text{ x } \pi} = 46.1\ pF \tag{51}$$

8.2.1.2.11 Power Dissipation Estimate

The following formulas estimate the power dissipation of the TPS54340B-Q1 device under continuous-conduction mode (CCM) operation. These equations should not be used if the device is operating in discontinuous-conduction mode (DCM).

The power dissipation of the IC includes conduction loss (P_{COND}), switching loss (P_{SW}), gate drive loss (P_{GD}) and supply current (P_Q). For example calculations of the design example with the 12-V typical input voltage, see Equation 52 through Equation 55.

$$P_{COND} = (I_{OUT})^2 \times R_{DS(on)} \times \left(\frac{V_{OUT}}{V_{IN}}\right) = 3.5\ A^2 \times 92\ m\Omega \times \frac{3.3\ V}{12\ V} = 0.31\ W \tag{52}$$

$$P_{SW} = V_{IN} \times f_{SW} \times I_{OUT} \times t_{rise} = 12\ V \times 600\ kHz \times 3.5\ A \times 4.9\ ns = 0.123\ W \tag{53}$$

$$P_{GD} = V_{IN} \times Q_G \times f_{SW} = 12\ V \times 3nC \times 600\ kHz = 0.022\ W \tag{54}$$

$$P_Q = V_{IN} \times I_Q = 12\ V \times 146\ \mu A = 0.0018\ W$$

where

- I_{OUT} is the output current (A)
- $R_{DS(on)}$ is the on-resistance of the high-side MOSFET (Ω)
- V_{OUT} is the output voltage (V)
- V_{IN} is the input voltage (V)
- f_{SW} is the switching frequency (Hz)
- t_{rise} is the SW pin voltage rise time and can be estimated by trise = V_{IN} × 0.16 ns/V + 3 ns
- Q_G is the total gate charge of the internal MOSFET
- I_Q is the operating nonswitching supply current (55)

Therefore,

$$P_{TOT} = P_{COND} + P_{SW} + P_{GD} + P_Q = 0.31\ W + 0.123\ W + 0.022\ W + 0.0018\ W = 0.457\ W \tag{56}$$

For given T_A,

$$T_J = T_A + R_{TH} \times P_{TOT} \tag{57}$$

For given $T_{J(max)}$ = 150°C

$$T_{A(max)} = T_{J(max)} - R_{TH} \times P_{TOT}$$

where

- P_{tot} is the total device power dissipation (W)
- T_A is the ambient temperature (°C)
- T_J is the junction temperature (°C)
- R_{TH} is the thermal resistance of the package (°C/W)
- $T_{J(max)}$ is maximum junction temperature (°C)
- $T_{A(max)}$ is maximum ambient temperature (°C) (58)

Copyright © 2017, Texas Instruments Incorporated

Additional power losses occur in the regulator circuit due to the inductor AC and DC losses, the catch diode, and PCB trace resistance impacting the overall efficiency of the regulator.

8.2.1.2.12 Discontinuous Conduction Mode and Eco-mode™ Boundary

With an input voltage of 12 V, the power supply enters discontinuous-conduction mode when the output current is less than 342 mA. The power supply enters Eco-mode when the output current is lower than 31.4 mA. The input current draw is 237 μA with no load.

8.2.1.3 Application Curves

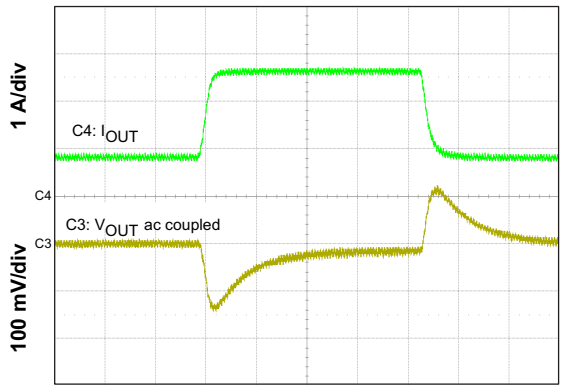

Time = 100 μs/div

Figure 34. Load Transient

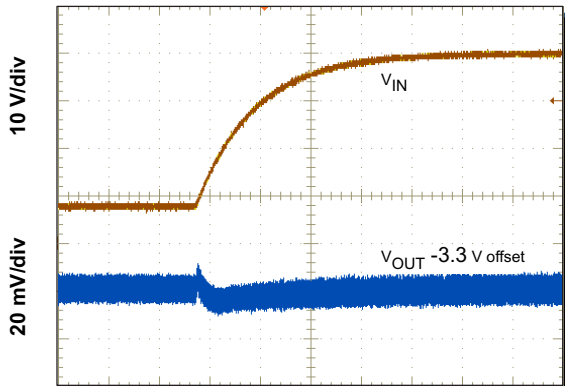

Time = 4 ms/div

Figure 35. Line Transient (8 V to 40 V)

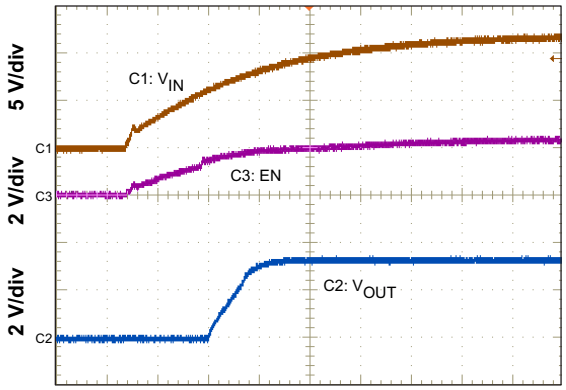

Time = 2 ms/div

Figure 36. Start-up With VIN

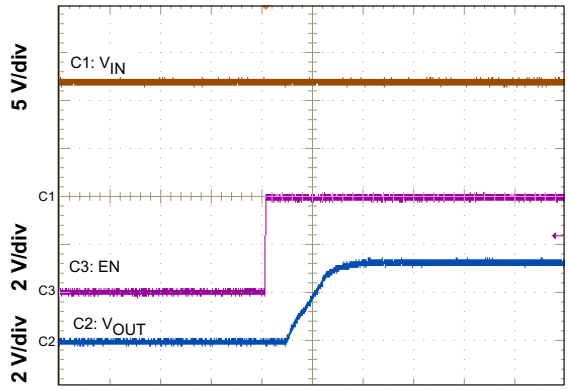

Time = 2 ms/div

Figure 37. Start-up With EN

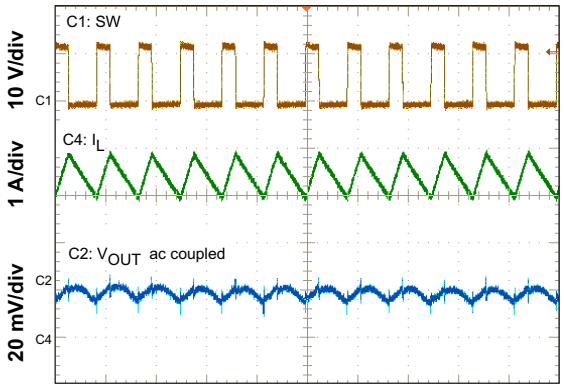

Time = 2 µs/div

Figure 38. Output Ripple CCM

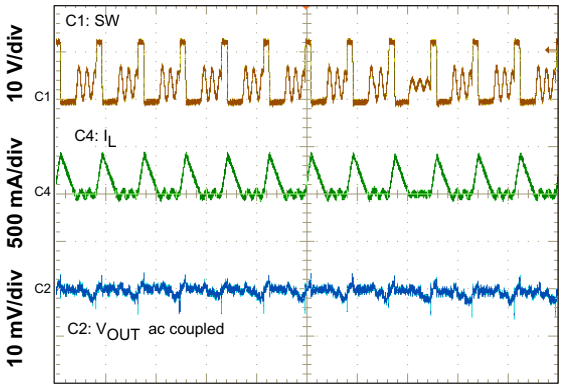

Time = 2 µs/div

Figure 39. Output Ripple DCM

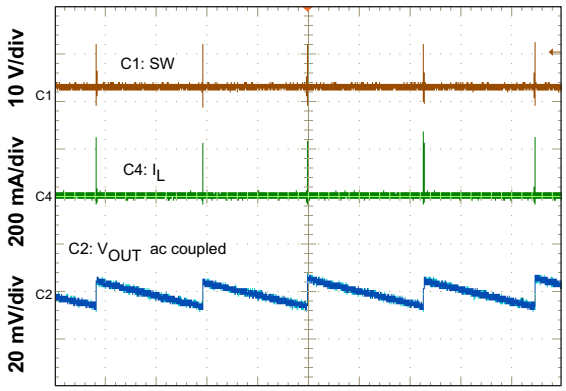

Time = 2 ms/div

Figure 40. Output Ripple PSM

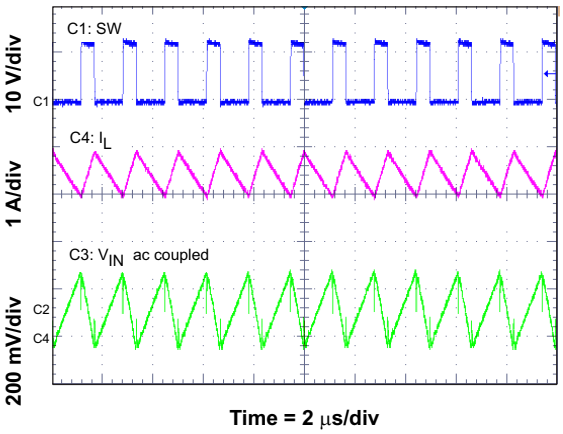

Time = 2 µs/div

Figure 41. Input Ripple CCM

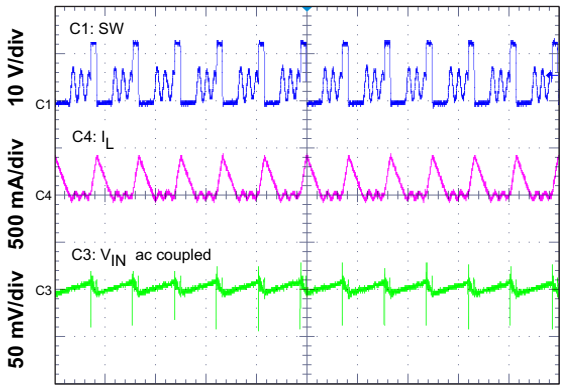

Time = 2 µs/div

Figure 42. Input Ripple DCM

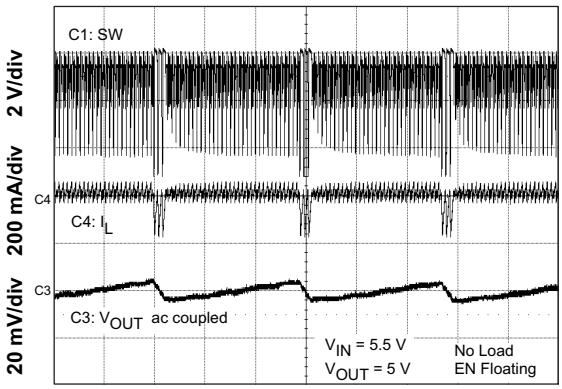

Time = 20 µs/div

Figure 43. Low Dropout Operation

Copyright © 2017, Texas Instruments Incorporated

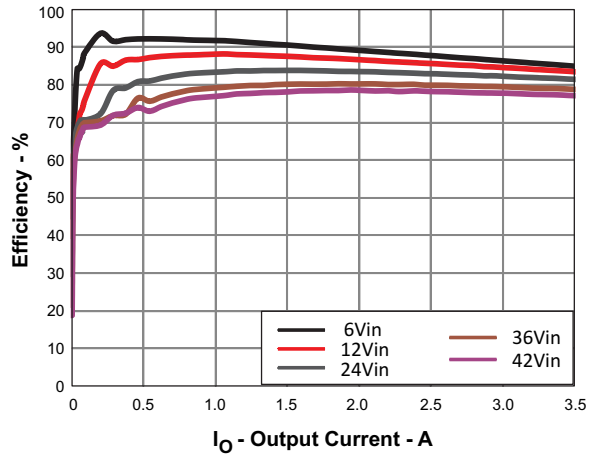

Figure 44. Efficiency vs Load Current

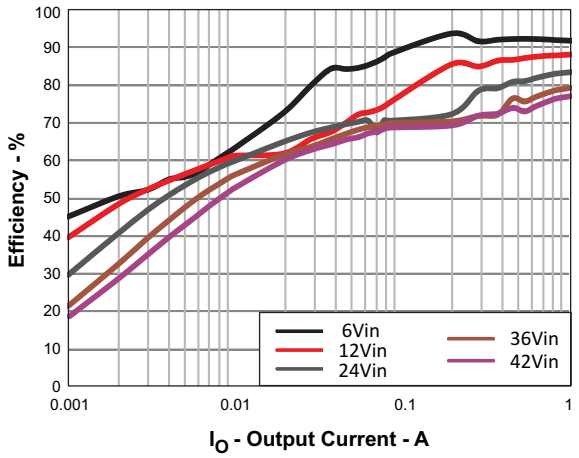

Figure 45. Light-Load Efficiency

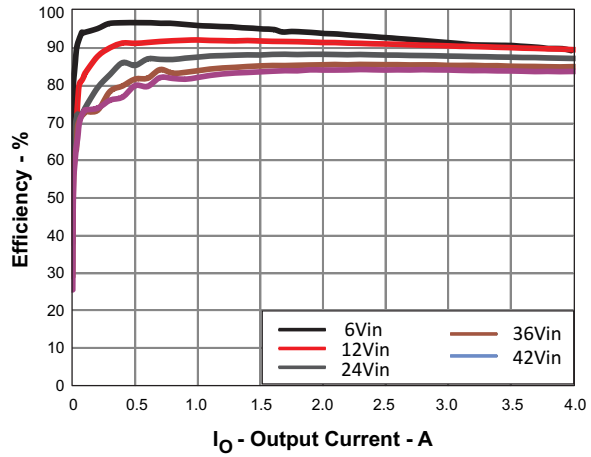

Figure 46. Efficiency vs Load Current

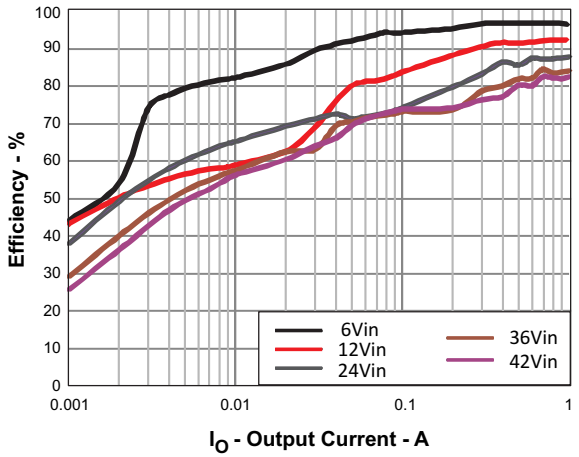

Figure 47. Light-Load Efficiency

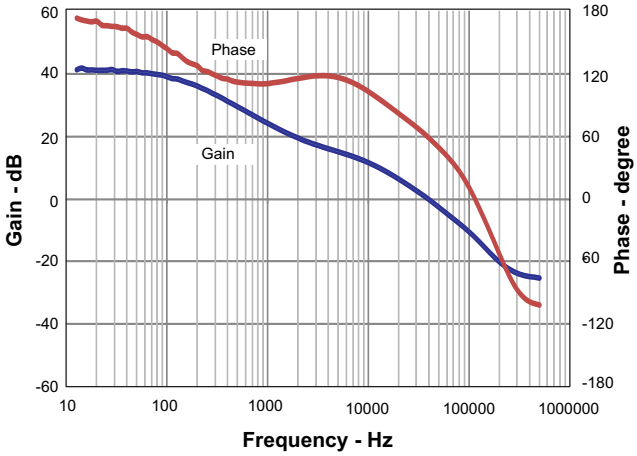

Figure 48. Overall Loop-Frequency Response

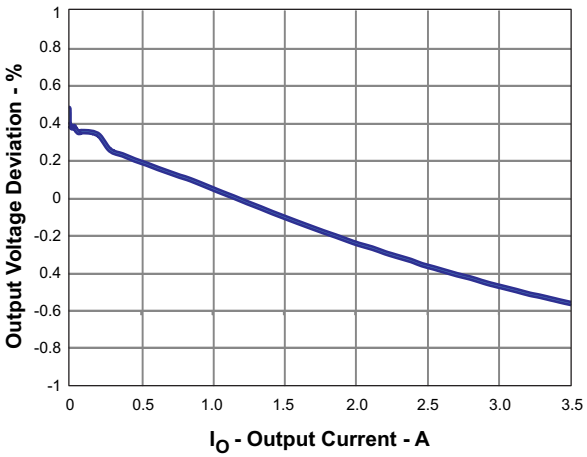

Figure 49. Regulation vs Load Current

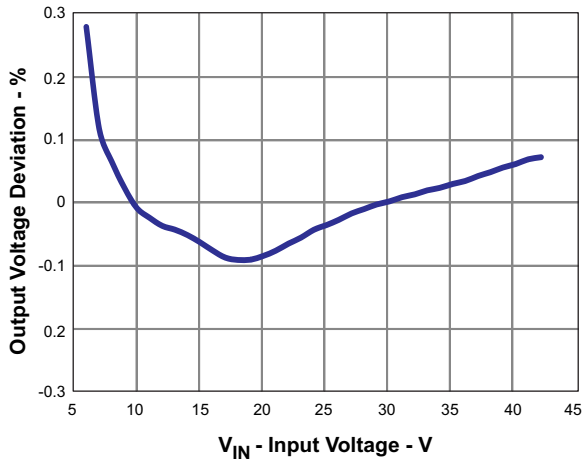

Figure 50. Regulation vs Input Voltage

8.2.2 Inverting Power Supply

The TPS54340B-Q1 device can be used to convert a positive input voltage to a negative output voltage. Example applications are amplifiers requiring a negative power supply. For a more detailed example, see SLVA317.

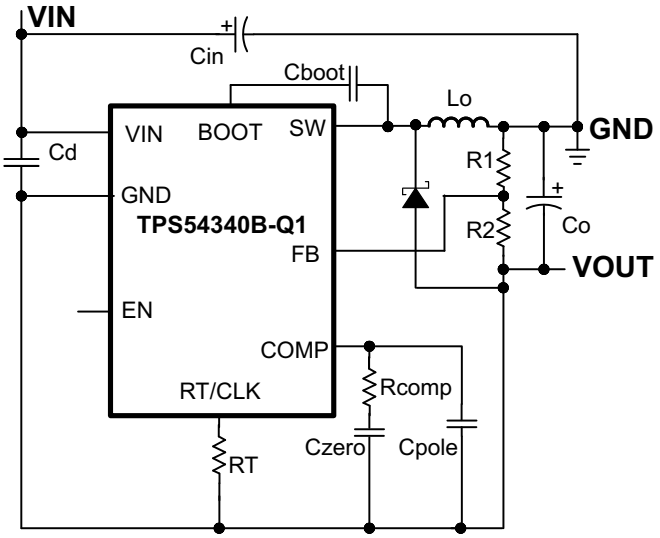

Copyright © 2016, Texas Instruments Incorporated

Figure 51. TPS54340B-Q1 Inverting Power Supply from Application Note (SLVA317)

Copyright © 2017, Texas Instruments Incorporated

8.2.3 Split-Rail Power Supply

The TPS54340B-Q1 device can be used to convert a positive input voltage to a split-rail positive and negative output voltage by using a coupled inductor. Example applications are amplifiers requiring a split-rail positive and negative voltage power supply. For a more detailed example, see SLVA369.

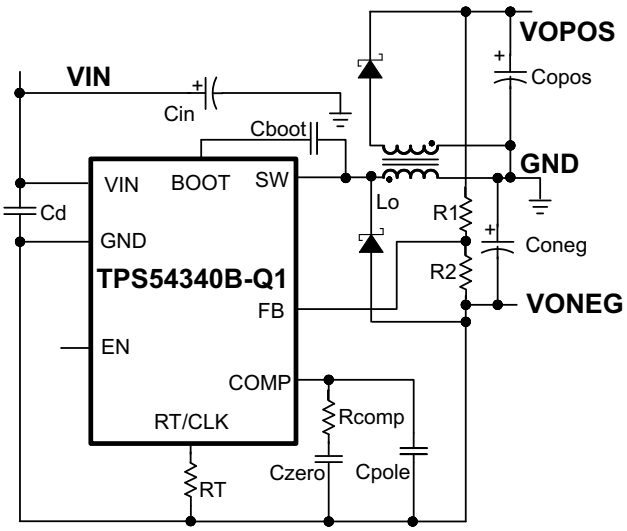

Copyright © 2016, Texas Instruments Incorporated

Figure 52. TPS54340B-Q1 Split-Rail Power Supply Based on Application Note (SLVA369)

9 Power Supply Recommendations

The device is designed to operate from an input voltage supply range from 4.5 V to 42V. This input supply must remain within this range. If the input supply is located more than a few inches from the TPS54340B-Q1 converter, additional bulk capacitance may be required in addition to the ceramic bypass capacitors. An electrolytic capacitor with a value of 100 µF is a typical choice.

10 Layout

10.1 Layout Guidelines

Layout is a critical portion of good power supply design. There are several signal paths that conduct fast changing currents or voltages that can interact with stray inductance or parasitic capacitance to generate noise or degrade performance. See Figure 53 for a PCB layout example.

- To reduce parasitic effects, the VIN pin should be bypassed to ground with a low ESR ceramic bypass capacitor with X5R or X7R dielectric.
- Take care to minimize the loop area formed by the bypass capacitor connections, the VIN pin, and the anode of the catch diode. The SW pin should be routed to the cathode of the catch diode and to the output inductor. Because the SW connection is the switching node, the catch diode and output inductor should be located close to the SW pin, and the area of the PCB conductor minimized to prevent excessive capacitive coupling.
- The GND pin should be tied directly to the power pad under the IC and the PowerPAD™. The PowerPAD should be connected to internal PCB ground planes using multiple vias directly under the IC.
- For operation at full rated load, the top side ground area must provide adequate heat dissipating area.
- The RT/CLK pin is sensitive to noise so the RT resistor should be located as close as possible to the IC and routed with minimal lengths of trace.
- The additional external components can be placed approximately as shown.
- It may be possible to obtain acceptable performance with alternate PCB layouts; however, this layout has been shown to produce good results, and is meant as a guideline.

10.2 Layout Example

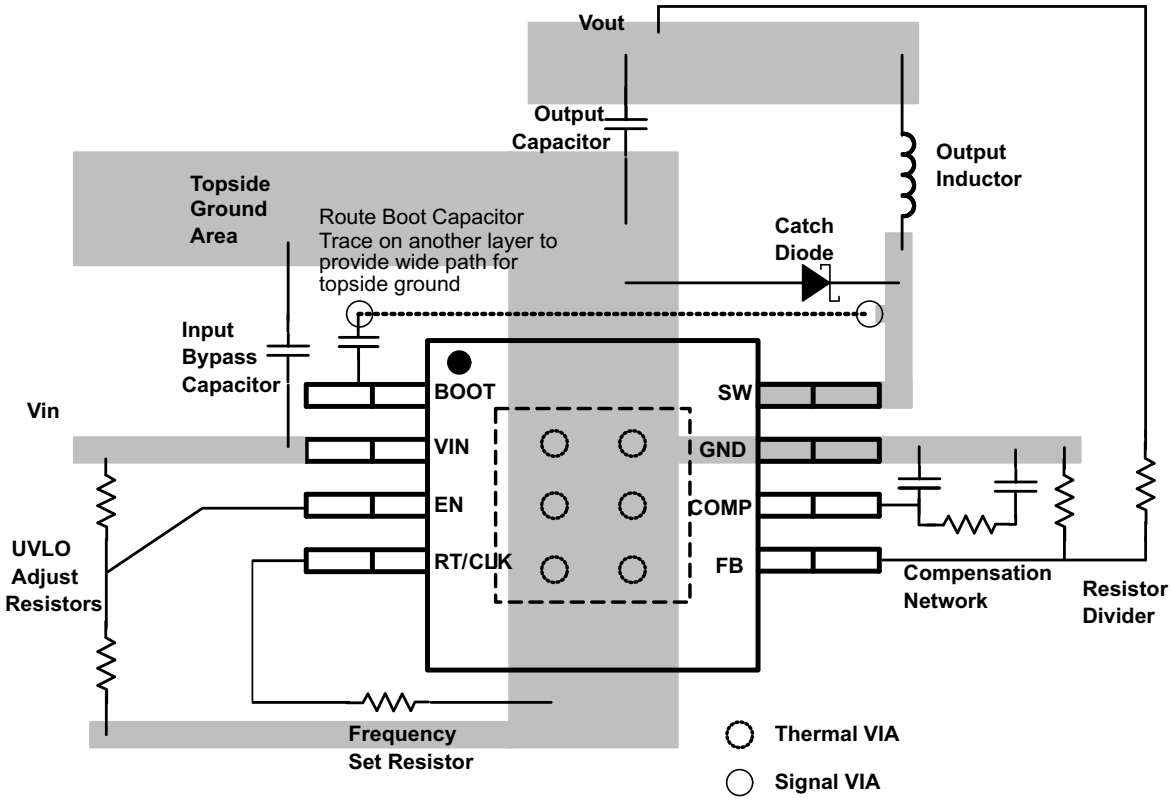

Figure 53. PCB Layout Example

10.3 Estimated Circuit Area

Boxing in the components in the design of Figure 33, the estimated PCB area is 1.025 in^2 (661 mm^2). This area does not include test points or connectors. If the area must be reduced, then this can be done by using a two sided assembly, and replacing the 0603 sized passives with a smaller-sized equivalent.

Copyright © 2017, Texas Instruments Incorporated

11 Device and Documentation Support

11.1 Device Support

11.1.1 Third-Party Products Disclaimer

TI'S PUBLICATION OF INFORMATION REGARDING THIRD-PARTY PRODUCTS OR SERVICES DOES NOT CONSTITUTE AN ENDORSEMENT REGARDING THE SUITABILITY OF SUCH PRODUCTS OR SERVICES OR A WARRANTY, REPRESENTATION OR ENDORSEMENT OF SUCH PRODUCTS OR SERVICES, EITHER ALONE OR IN COMBINATION WITH ANY TI PRODUCT OR SERVICE.

11.2 Documentation Support

11.2.1 Related Documentation

For related documentation see the following:

- *Creating GSM Power Supply from TPS54260*, SLVA412.
- *Creating a Universal Car Charger for USB Devices From the TPS54240 and TPS2511*, SLVA464.
- *Create an Inverting Power Supply from a Step-Down Regulator*, SLVA317.
- *Create a Split-Rail Power Supply with a Wide Input Voltage Buck Regulator*, SLVA369.

11.3 Community Resources

The following links connect to TI community resources. Linked contents are provided "AS IS" by the respective contributors. They do not constitute TI specifications and do not necessarily reflect TI's views; see TI's Terms of Use.

TI E2E™ Online Community ***TI's Engineer-to-Engineer (E2E) Community.*** Created to foster collaboration among engineers. At e2e.ti.com, you can ask questions, share knowledge, explore ideas and help solve problems with fellow engineers.

Design Support ***TI's Design Support*** Quickly find helpful E2E forums along with design support tools and contact information for technical support.

11.4 Trademarks

Eco-mode, PowerPAD, E2E are trademarks of Texas Instruments.
WEBENCH is a registered trademark of Texas Instruments.
All other trademarks are the property of their respective owners.

11.5 Electrostatic Discharge Caution

These devices have limited built-in ESD protection. The leads should be shorted together or the device placed in conductive foam during storage or handling to prevent electrostatic damage to the MOS gates.

11.6 Glossary

SLYZ022 — *TI Glossary*.

This glossary lists and explains terms, acronyms, and definitions.

12 Mechanical, Packaging, and Orderable Information

The following pages include mechanical, packaging, and orderable information. This information is the most current data available for the designated devices. This data is subject to change without notice and revision of this document. For browser-based versions of this data sheet, refer to the left-hand navigation.

PACKAGING INFORMATION

Orderable part number	Status (1)	Material type (2)	Package | Pins	Package qty | Carrier	RoHS (3)	Lead finish/ Ball material (4)	MSL rating/ Peak reflow (5)	Op temp (°C)	Part marking (6)
TPS54340BQDDAQ1	Active	Production	SO PowerPAD (DDA) | 8	75 | TUBE	Yes	NIPDAU | NIPDAUAG	Level-2-260C-1 YEAR	-40 to 125	5434BQ
TPS54340BQDDAQ1.B	Active	Production	SO PowerPAD (DDA) | 8	75 | TUBE	Yes	NIPDAU	Level-2-260C-1 YEAR	-40 to 125	5434BQ
TPS54340BQDDARQ1	Active	Production	SO PowerPAD (DDA) | 8	2500 | LARGE T&R	Yes	NIPDAU | NIPDAUAG	Level-2-260C-1 YEAR	-40 to 125	5434BQ
TPS54340BQDDARQ1.B	Active	Production	SO PowerPAD (DDA) | 8	2500 | LARGE T&R	Yes	NIPDAU	Level-2-260C-1 YEAR	-40 to 125	5434BQ

(1) **Status:** For more details on status, see our product life cycle.

(2) **Material type:** When designated, preproduction parts are prototypes/experimental devices, and are not yet approved or released for full production. Testing and final process, including without limitation quality assurance, reliability performance testing, and/or process qualification, may not yet be complete, and this item is subject to further changes or possible discontinuation. If available for ordering, purchases will be subject to an additional waiver at checkout, and are intended for early internal evaluation purposes only. These items are sold without warranties of any kind.

(3) **RoHS values:** Yes, No, RoHS Exempt. See the TI RoHS Statement for additional information and value definition.

(4) **Lead finish/Ball material:** Parts may have multiple material finish options. Finish options are separated by a vertical ruled line. Lead finish/Ball material values may wrap to two lines if the finish value exceeds the maximum column width.

(5) **MSL rating/Peak reflow:** The moisture sensitivity level ratings and peak solder (reflow) temperatures. In the event that a part has multiple moisture sensitivity ratings, only the lowest level per JEDEC standards is shown. Refer to the shipping label for the actual reflow temperature that will be used to mount the part to the printed circuit board.

(6) **Part marking:** There may be an additional marking, which relates to the logo, the lot trace code information, or the environmental category of the part.

Multiple part markings will be inside parentheses. Only one part marking contained in parentheses and separated by a "~" will appear on a part. If a line is indented then it is a continuation of the previous line and the two combined represent the entire part marking for that device.

Important Information and Disclaimer: The information provided on this page represents TI's knowledge and belief as of the date that it is provided. TI bases its knowledge and belief on information provided by third parties, and makes no representation or warranty as to the accuracy of such information. Efforts are underway to better integrate information from third parties. TI has taken and continues to take reasonable steps to provide representative and accurate information but may not have conducted destructive testing or chemical analysis on incoming materials and chemicals. TI and TI suppliers consider certain information to be proprietary, and thus CAS numbers and other limited information may not be available for release.

In no event shall TI's liability arising out of such information exceed the total purchase price of the TI part(s) at issue in this document sold by TI to Customer on an annual basis.

OTHER QUALIFIED VERSIONS OF TPS54340B-Q1 :

- Catalog : TPS54340B

NOTE: Qualified Version Definitions:

- Catalog - TI's standard catalog product

DDA 8 PowerPAD™ SOIC - 1.7 mm max height

PLASTIC SMALL OUTLINE

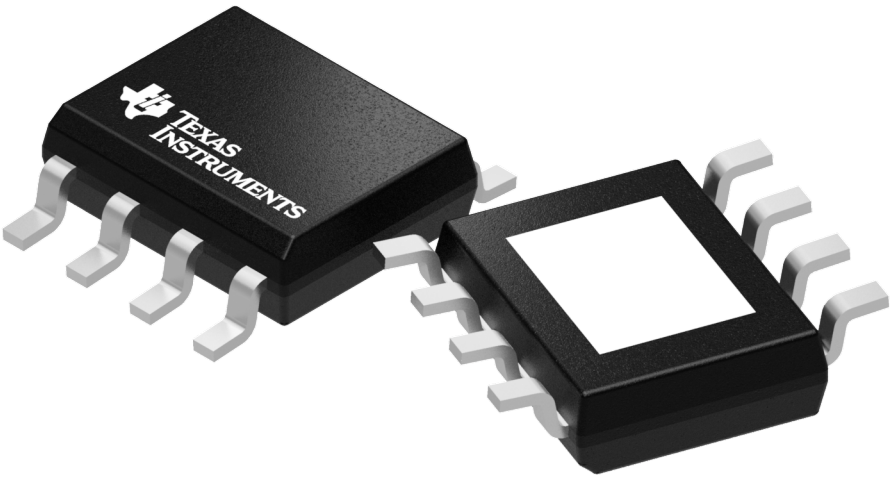

Images above are just a representation of the package family, actual package may vary.
Refer to the product data sheet for package details.

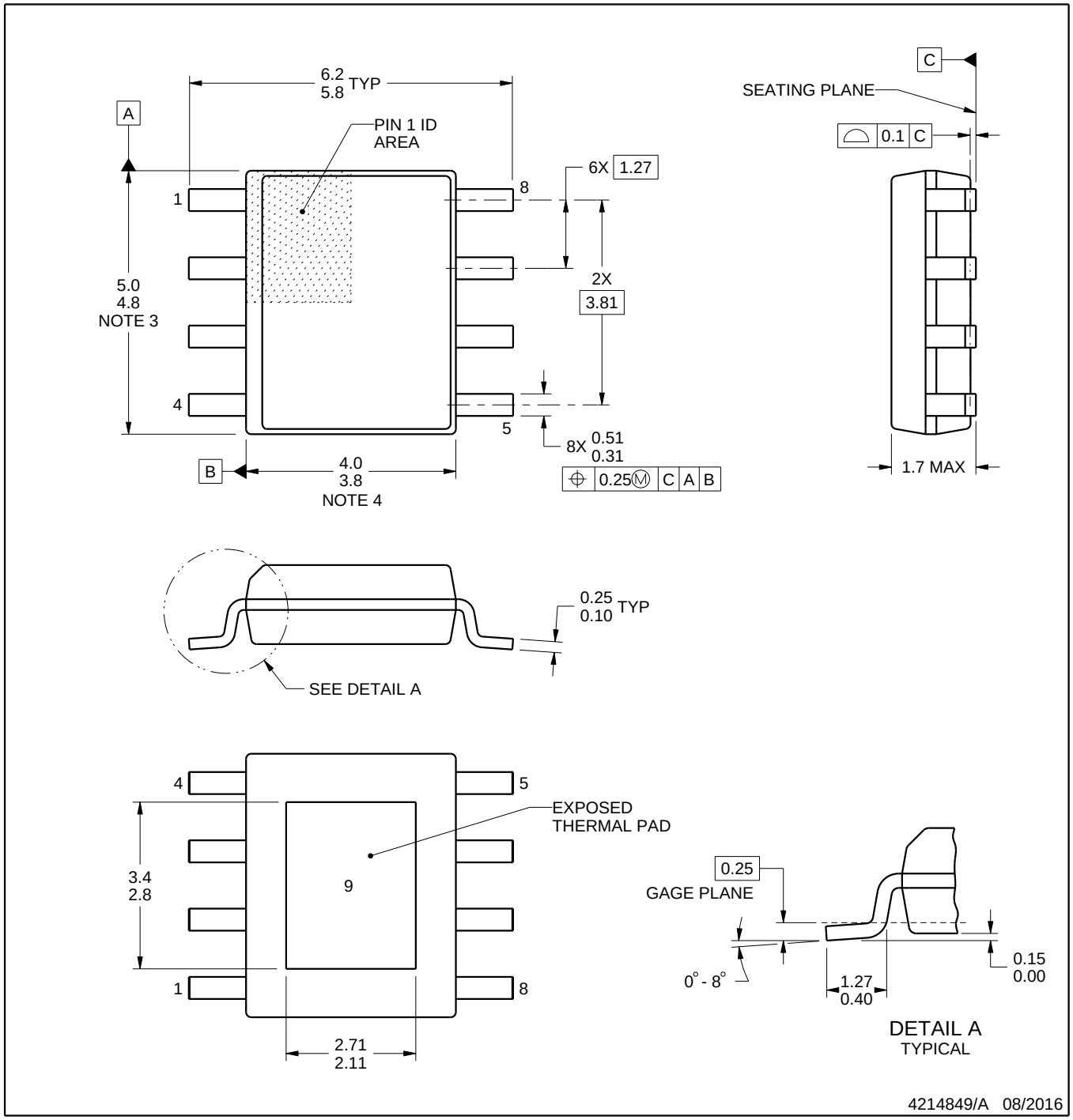

PowerPAD is a trademark of Texas Instruments.

NOTES:

1. All linear dimensions are in millimeters. Any dimensions in parenthesis are for reference only. Dimensioning and tolerancing per ASME Y14.5M.
2. This drawing is subject to change without notice.
3. This dimension does not include mold flash, protrusions, or gate burrs. Mold flash, protrusions, or gate burrs shall not exceed 0.15 mm per side.
4. This dimension does not include interlead flash. Interlead flash shall not exceed 0.25 mm per side.
5. Reference JEDEC registration MS-012.

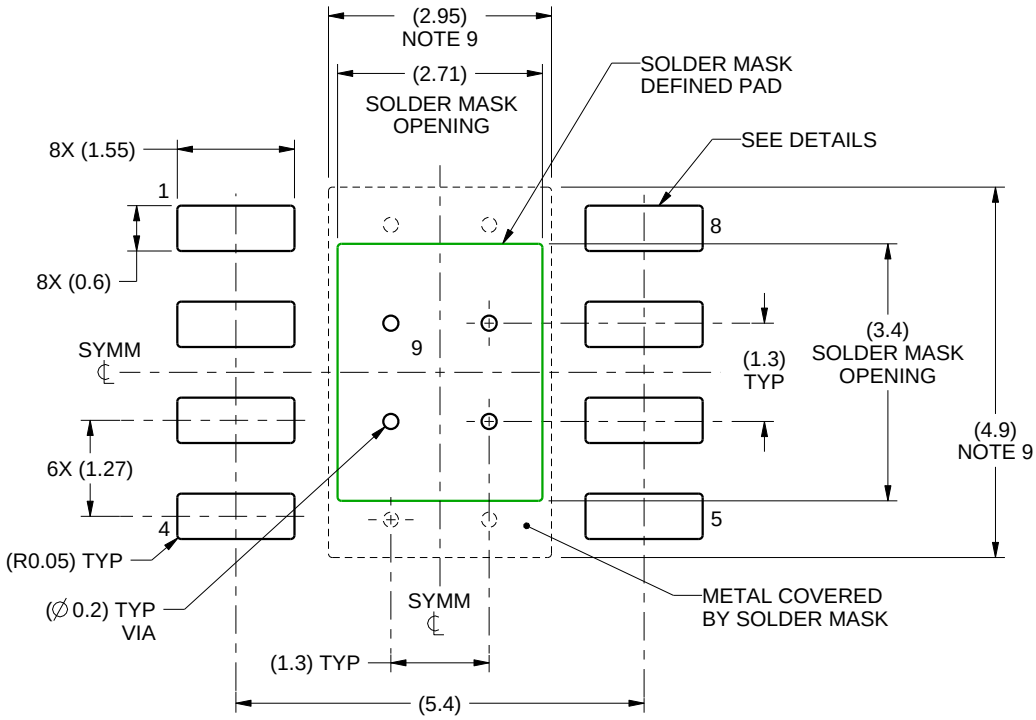

LAND PATTERN EXAMPLE
SCALE:10X

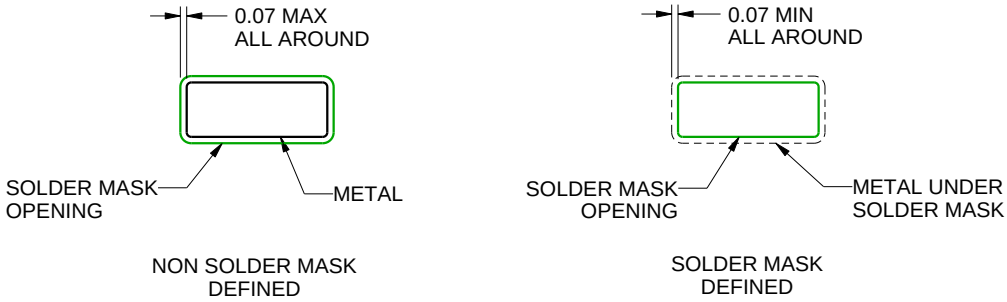

SOLDER MASK DETAILS
PADS 1-8

4214849/A 08/2016

NOTES: (continued)

6. Publication IPC-7351 may have alternate designs.
7. Solder mask tolerances between and around signal pads can vary based on board fabrication site.
8. This package is designed to be soldered to a thermal pad on the board. For more information, see Texas Instruments literature numbers SLMA002 (www.ti.com/lit/slma002) and SLMA004 (www.ti.com/lit/slma004).
9. Size of metal pad may vary due to creepage requirement.
10. Vias are optional depending on application, refer to device data sheet. If any vias are implemented, refer to their locations shown on this view. It is recommended that vias under paste be filled, plugged or tented.

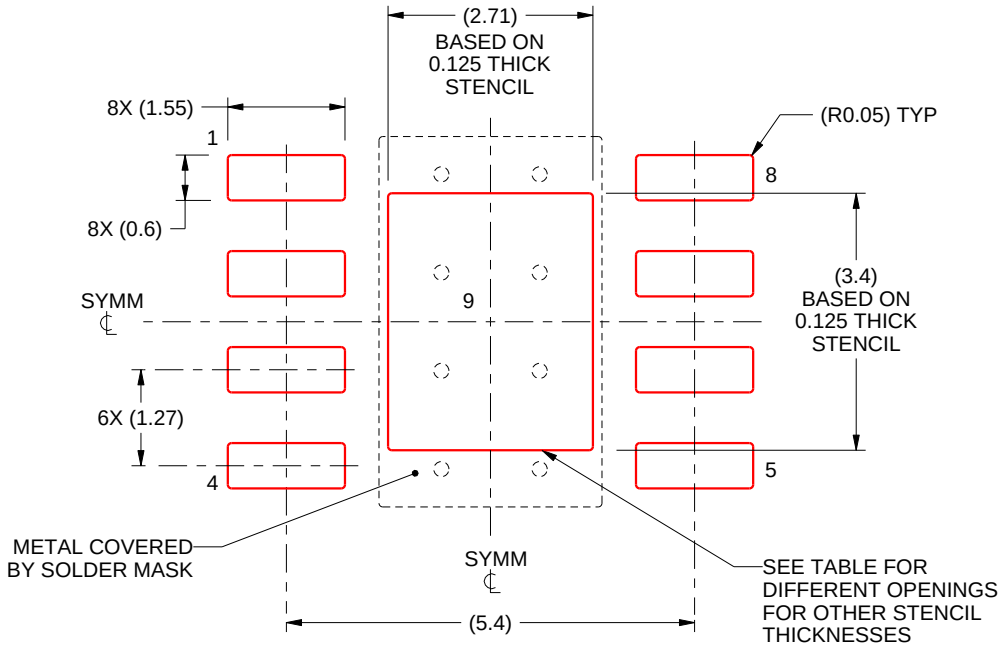

SOLDER PASTE EXAMPLE
EXPOSED PAD
100% PRINTED SOLDER COVERAGE BY AREA
SCALE:10X

STENCIL THICKNESS	SOLDER STENCIL OPENING
0.1	3.03 X 3.80
0.125	2.71 X 3.40 (SHOWN)
0.150	2.47 X 3.10
0.175	2.29 X 2.87

4214849/A 08/2016

NOTES: (continued)

11. Laser cutting apertures with trapezoidal walls and rounded corners may offer better paste release. IPC-7525 may have alternate design recommendations.
12. Board assembly site may have different recommendations for stencil design.

DDA (R-PDSO-G8) PowerPAD™ PLASTIC SMALL-OUTLINE

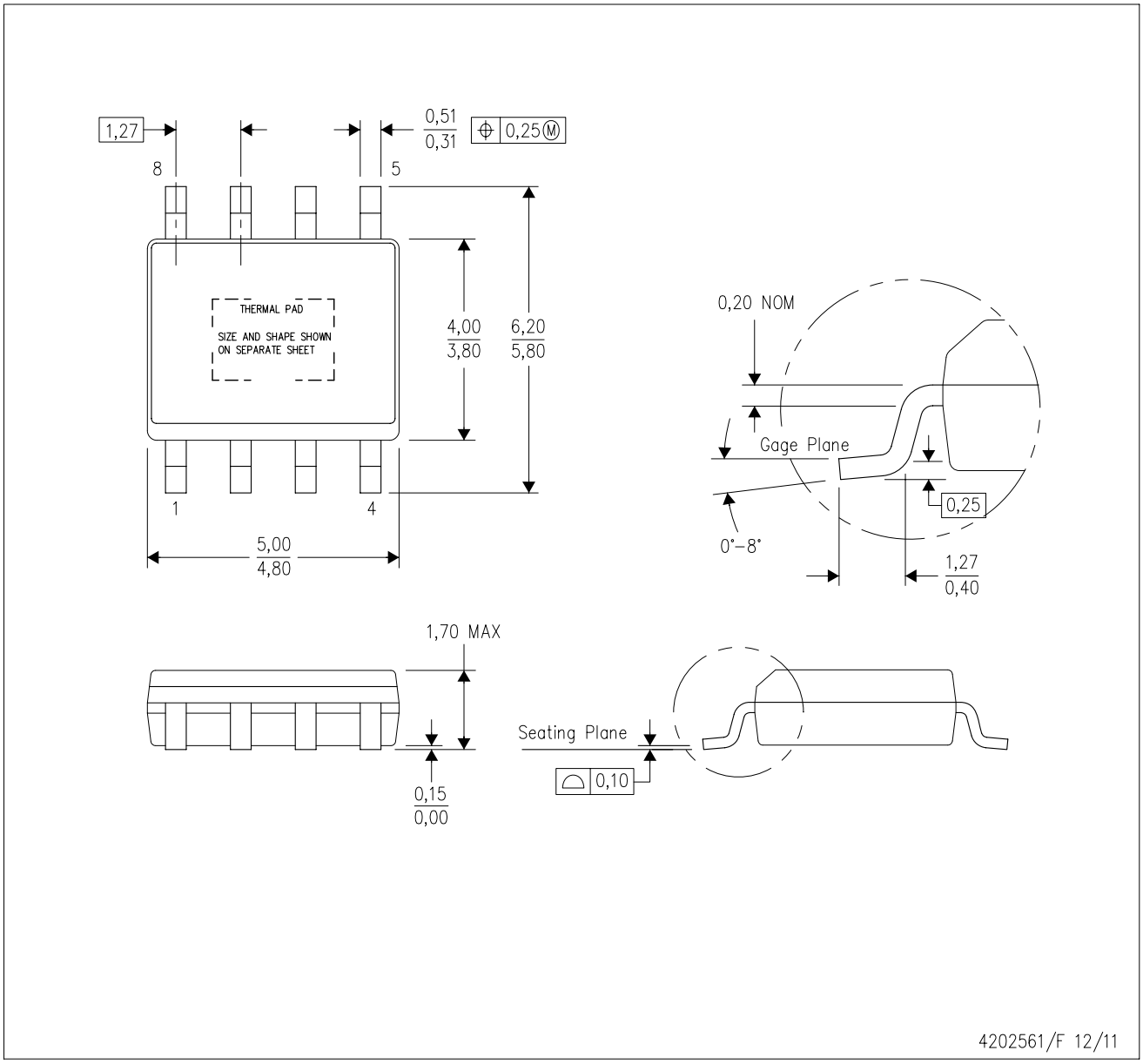

NOTES:
A. All linear dimensions are in millimeters. Dimensioning and tolerancing per ASME Y14.5–1994.
B. This drawing is subject to change without notice.
C. Body dimensions do not include mold flash or protrusion not to exceed 0,15.
D. This package is designed to be soldered to a thermal pad on the board. Refer to Technical Brief, PowerPad Thermally Enhanced Package, Texas Instruments Literature No. SLMA002 for information regarding recommended board layout. This document is available at www.ti.com <http://www.ti.com>.
E. See the additional figure in the Product Data Sheet for details regarding the exposed thermal pad features and dimensions.
F. This package complies to JEDEC MS-012 variation BA

PowerPAD is a trademark of Texas Instruments.

DDA (R-PDSO-G8) PowerPAD™ PLASTIC SMALL OUTLINE

THERMAL INFORMATION

This PowerPAD™ package incorporates an exposed thermal pad that is designed to be attached to a printed circuit board (PCB). The thermal pad must be soldered directly to the PCB. After soldering, the PCB can be used as a heatsink. In addition, through the use of thermal vias, the thermal pad can be attached directly to the appropriate copper plane shown in the electrical schematic for the device, or alternatively, can be attached to a special heatsink structure designed into the PCB. This design optimizes the heat transfer from the integrated circuit (IC).

For additional information on the PowerPAD package and how to take advantage of its heat dissipating abilities, refer to Technical Brief, PowerPAD Thermally Enhanced Package, Texas Instruments Literature No. SLMA002 and Application Brief, PowerPAD Made Easy, Texas Instruments Literature No. SLMA004. Both documents are available at www.ti.com.

The exposed thermal pad dimensions for this package are shown in the following illustration.

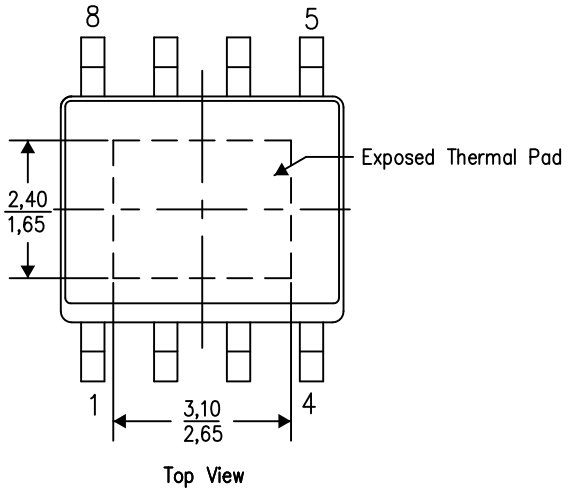

Exposed Thermal Pad Dimensions

4206322-6/L 05/12

NOTE: A. All linear dimensions are in millimeters

PowerPAD is a trademark of Texas Instruments

DDA (R–PDSO–G8) PowerPAD™ PLASTIC SMALL OUTLINE

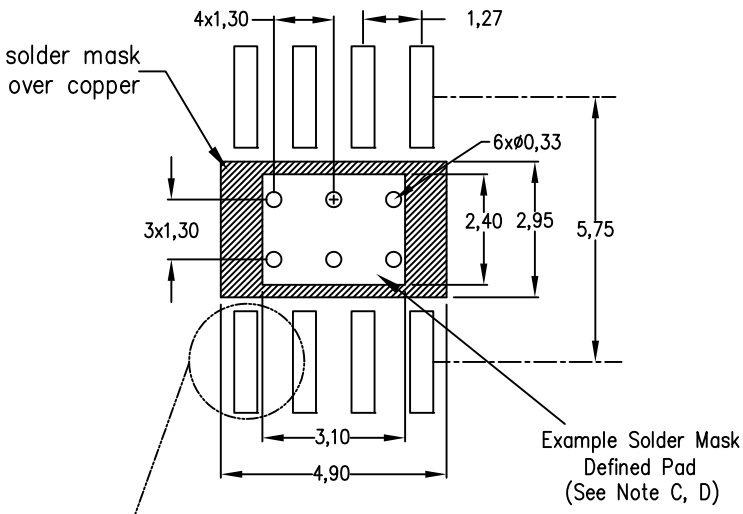

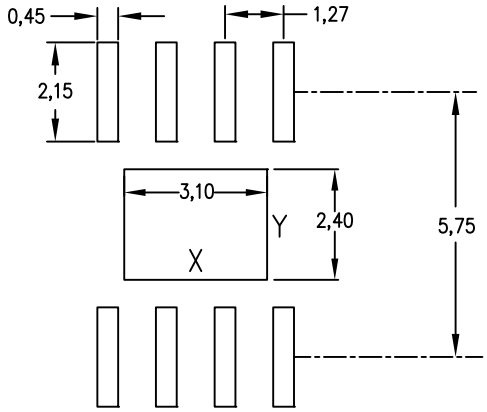

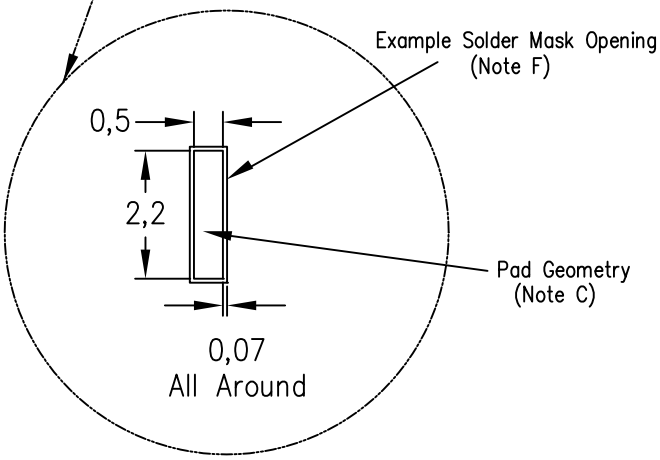

Center Power Pad Solder Stencil Opening		
Stencil Thickness	X	Y
0.1mm	3.3	2.6
0.127mm	3.1	2.4
0.152mm	2.9	2.2
0.178mm	2.8	2.1

4208951–6/D 04/12

NOTES:
A. All linear dimensions are in millimeters.
B. This drawing is subject to change without notice.
C. Publication IPC–7351 is recommended for alternate designs.
D. This package is designed to be soldered to a thermal pad on the board. Refer to Technical Brief, PowerPad Thermally Enhanced Package, Texas Instruments Literature No. SLMA002, SLMA004, and also the Product Data Sheets for specific thermal information, via requirements, and recommended board layout. These documents are available at www.ti.com <http://www.ti.com>. Publication IPC–7351 is recommended for alternate designs.
E. Laser cutting apertures with trapezoidal walls and also rounding corners will offer better paste release. Customers should contact their board assembly site for stencil design recommendations. Example stencil design based on a 50% volumetric metal load solder paste. Refer to IPC–7525 for other stencil recommendations.
F. Customers should contact their board fabrication site for solder mask tolerances between and around signal pads.

PowerPAD is a trademark of Texas Instruments.

IMPORTANT NOTICE AND DISCLAIMER

TI PROVIDES TECHNICAL AND RELIABILITY DATA (INCLUDING DATA SHEETS), DESIGN RESOURCES (INCLUDING REFERENCE DESIGNS), APPLICATION OR OTHER DESIGN ADVICE, WEB TOOLS, SAFETY INFORMATION, AND OTHER RESOURCES “AS IS” AND WITH ALL FAULTS, AND DISCLAIMS ALL WARRANTIES, EXPRESS AND IMPLIED, INCLUDING WITHOUT LIMITATION ANY IMPLIED WARRANTIES OF MERCHANTABILITY, FITNESS FOR A PARTICULAR PURPOSE OR NON-INFRINGEMENT OF THIRD PARTY INTELLECTUAL PROPERTY RIGHTS.

These resources are intended for skilled developers designing with TI products. You are solely responsible for (1) selecting the appropriate TI products for your application, (2) designing, validating and testing your application, and (3) ensuring your application meets applicable standards, and any other safety, security, regulatory or other requirements.

These resources are subject to change without notice. TI grants you permission to use these resources only for development of an application that uses the TI products described in the resource. Other reproduction and display of these resources is prohibited. No license is granted to any other TI intellectual property right or to any third party intellectual property right. TI disclaims responsibility for, and you will fully indemnify TI and its representatives against, any claims, damages, costs, losses, and liabilities arising out of your use of these resources.

TI’s products are provided subject to TI’s Terms of Sale or other applicable terms available either on ti.com or provided in conjunction with such TI products. TI’s provision of these resources does not expand or otherwise alter TI’s applicable warranties or warranty disclaimers for TI products.

TI objects to and rejects any additional or different terms you may have proposed.

Mailing Address: Texas Instruments, Post Office Box 655303, Dallas, Texas 75265
Copyright © 2025, Texas Instruments Incorporated