SCAN921025H and SCAN921226H High Temperature 20-80 MHz 10 Bit Bus LVDS SerDes with IEEE 1149.1 (JTAG) and at-speed BIST

Check for Samples: SCAN921025H, SCAN921226H

FEATURES

- **High Temperature Operation to 125°C**
- **IEEE 1149.1 (JTAG) Compliant and At-Speed BIST Test Mode**
- **Clock Recovery from PLL Lock to Random Data Patterns**
- **Ensured Transition Every Data Transfer Cycle**
- **Chipset (Tx + Rx) Power Consumption < 600 mW (Typ) @ 80 MHz**
- **Single Differential Pair Eliminates Multi-Channel Skew**
- **800 Mbps Serial Bus LVDS Data Rate (at 80 MHz Clock)**
- **10-bit Parallel Interface for 1 Byte Data Plus 2 Control Bits**
- **Synchronization Mode and LOCK Indicator**
- **Programmable Edge Trigger on Clock**
- **High Impedance on Receiver Inputs When Power is Off**
- **Bus LVDS Serial Output Rated for 27Ω Load**
- **Small 49-Lead NFBGA Package**

APPLICATIONS

- **Automotive**
- **Industrial**
- **Military/Aerospace**

DESCRIPTION

The SCAN921025H transforms a 10-bit wide parallel LVCMOS/LVTTL data bus into a single high speed Bus LVDS serial data stream with embedded clock. The SCAN921226H receives the Bus LVDS serial data stream and transforms it back into a 10-bit wide parallel data bus and recovers parallel clock.

Both devices are compliant with IEEE 1149.1 Standard for Boundary Scan Test. IEEE 1149.1 features provide the design or test engineer access via a standard Test Access Port (TAP) to the backplane or cable interconnects and the ability to verify differential signal integrity. The pair of devices also features an at-speed BIST mode which allows the interconnects between the Serializer and Deserializer to be verified at-speed.

The SCAN921025H transmits data over backplanes or cable. The single differential pair data path makes PCB design easier. In addition, the reduced cable, PCB trace count, and connector size tremendously reduce cost. Since one output transmits clock and data bits serially, it eliminates clock-to-data and data-to-data skew. The powerdown pin saves power by reducing supply current when not using either device. Upon power up of the Serializer, you can choose to activate synchronization mode or allow the Deserializer to use the synchronization-to-random-data feature. By using the synchronization mode, the Deserializer will establish lock to a signal within specified lock times. In addition, the embedded clock ensures a transition on the bus every 12-bit cycle. This eliminates transmission errors due to charged cable conditions. Furthermore, you may put the SCAN921025H output pins into tri-state to achieve a high impedance state. The PLL can lock to frequencies between 20 MHz and 80 MHz.

Please be aware that an important notice concerning availability, standard warranty, and use in critical applications of Texas Instruments semiconductor products and disclaimers thereto appears at the end of this data sheet.

All trademarks are the property of their respective owners.

PRODUCTION DATA information is current as of publication date. Products conform to specifications per the terms of the Texas Instruments standard warranty. Production processing does not necessarily include testing of all parameters.

Copyright © 2004–2013, Texas Instruments Incorporated

Block Diagram

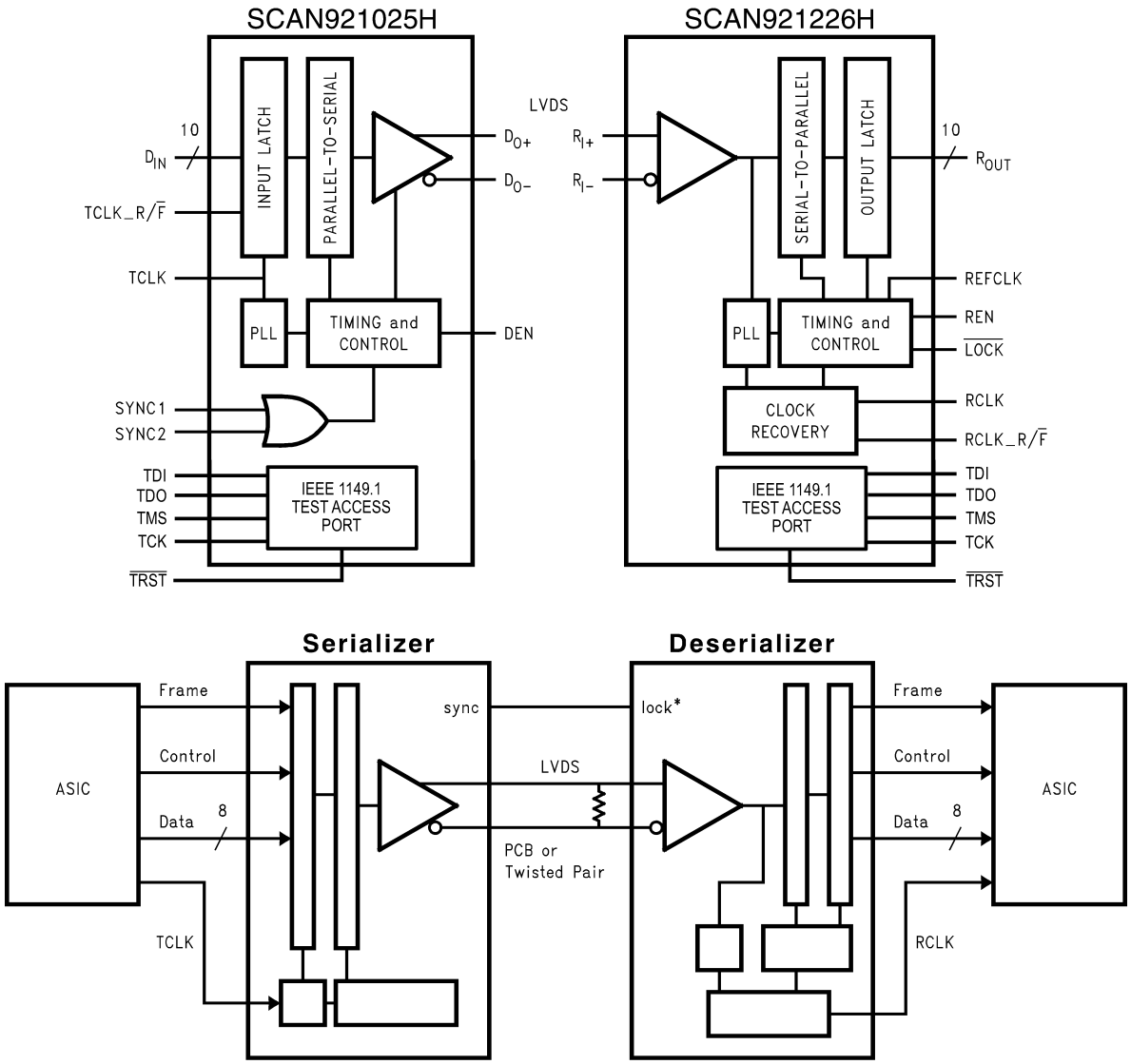

Figure 1. Application

Copyright © 2004–2013, Texas Instruments Incorporated

Functional Description

The SCAN921025H and SCAN921226H are a 10-bit Serializer and Deserializer chipset designed to transmit data over differential backplanes at clock speeds from 20 to 80 MHz. The chipset is also capable of driving data over Unshielded Twisted Pair (UTP) cable.

The chipset has three active states of operation: Initialization, Data Transfer, and Resynchronization; and two passive states: Powerdown and Tri-state. In addition to the active and passive states, there are also test modes for JTAG access and at-speed BIST.

The following sections describe each operation and passive state and the test modes.

Initialization

Initialization of both devices must occur before data transmission begins. Initialization refers to synchronization of the Serializer and Deserializer PLL's to local clocks, which may be the same or separate. Afterwards, synchronization of the Deserializer to Serializer occurs.

Step 1: When you apply V_{CC} to both Serializer and/or Deserializer, the respective outputs enter tri-state, and on-chip power-on circuitry disables internal circuitry. When V_{CC} reaches V_{CC}OK (2.5V) the PLL in each device begins locking to a local clock. For the Serializer, the local clock is the transmit clock (TCLK) provided by the source ASIC or other device. For the Deserializer, you must apply a local clock to the REFCLK pin.

The Serializer outputs remain in tri-state while the PLL locks to the TCLK. After locking to TCLK, the Serializer is now ready to send data or SYNC patterns, depending on the levels of the SYNC1 and SYNC2 inputs or a data stream. The SYNC pattern sent by the Serializer consists of six ones and six zeros switching at the input clock rate.

Note that the Deserializer $\overline{\text{LOCK}}$ output will remain high while its PLL locks to the incoming data or to SYNC patterns on the input.

Step 2: The Deserializer PLL must synchronize to the Serializer to complete initialization. The Deserializer will lock to non-repetitive data patterns. However, the transmission of SYNC patterns enables the Deserializer to lock to the Serializer signal within a specified time. See Figure 17.

The user's application determines control of the SYNC1 and SYNC 2 pins. One recommendation is a direct feedback loop from the $\overline{\text{LOCK}}$ pin. Under all circumstances, the Serializer stops sending SYNC patterns after both SYNC inputs return low.

When the Deserializer detects edge transitions at the Bus LVDS input, it will attempt to lock to the embedded clock information. When the Deserializer locks to the Bus LVDS clock, the $\overline{\text{LOCK}}$ output will go low. When $\overline{\text{LOCK}}$ is low, the Deserializer outputs represent incoming Bus LVDS data.

Data Transfer

After initialization, the Serializer will accept data from inputs DIN0–DIN9. The Serializer uses the TCLK input to latch incoming Data. The TCLK_R/$\overline{\text{F}}$ pin selects which edge the Serializer uses to strobe incoming data. TCLK_R/$\overline{\text{F}}$ high selects the rising edge for clocking data and low selects the falling edge. If either of the SYNC inputs is high for 5*TCLK cycles, the data at DIN0-DIN9 is ignored regardless of clock edge.

After determining which clock edge to use, a start and stop bit, appended internally, frame the data bits in the register. The start bit is always high and the stop bit is always low. The start and stop bits function as the embedded clock bits in the serial stream.

The Serializer transmits serialized data and clock bits (10+2 bits) from the serial data output (DO±) at 12 times the TCLK frequency. For example, if TCLK is 80 MHz, the serial rate is 80 × 12 = 960 Mega-bits-per-second. Since only 10 bits are from input data, the serial “payload” rate is 10 times the TCLK frequency. For instance, if TCLK = 80 MHz, the payload data rate is 80 × 10 = 800 Mbps. The data source provides TCLK and must be in the range of 20 MHz to 80 MHz nominal.

The Serializer outputs (DO±) can drive a point-to-point connection or in limited multi-point or multi-drop backplanes. The outputs transmit data when the enable pin (DEN) is high, $\overline{\text{PWRDN}}$ = high, and SYNC1 and SYNC2 are low. When DEN is driven low, the Serializer output pins will enter tri-state.

Copyright © 2004–2013, Texas Instruments Incorporated

When the Deserializer synchronizes to the Serializer, the $\overline{\text{LOCK}}$ pin is low. The Deserializer locks to the embedded clock and uses it to recover the serialized data. ROUT data is valid when $\overline{\text{LOCK}}$ is low. Otherwise ROUT0–ROUT9 is invalid.

The ROUT0-ROUT9 pins use the RCLK pin as the reference to data. The polarity of the RCLK edge is controlled by the RCLK_R/$\overline{\text{F}}$ input. See Figure 14.

ROUT(0-9), $\overline{\text{LOCK}}$ and RCLK outputs will drive a maximum of three CMOS input gates (15 pF load) with a 80 MHz clock.

Resynchronization

When the Deserializer PLL locks to the embedded clock edge, the Deserializer $\overline{\text{LOCK}}$ pin asserts a low. If the Deserializer loses lock, the $\overline{\text{LOCK}}$ pin output will go high and the outputs (including RCLK) will enter tri-state.

The user's system monitors the $\overline{\text{LOCK}}$ pin to detect a loss of synchronization. Upon detection, the system can arrange to pulse the Serializer SYNC1 or SYNC2 pin to resynchronize. Multiple resynchronization approaches are possible. One recommendation is to provide a feedback loop using the $\overline{\text{LOCK}}$ pin itself to control the sync request of the Serializer (SYNC1 or SYNC2). Dual SYNC pins are provided for multiple control in a multi-drop application. Sending sync patterns for resynchronization is desirable when lock times within a specific time are critical. However, the Deserializer can lock to random data, which is discussed in the next section.

Random Lock Initialization and Resynchronization

The initialization and resynchronization methods described in their respective sections are the fastest ways to establish the link between the Serializer and Deserializer. However, the SCAN921226H can attain lock to a data stream without requiring the Serializer to send special SYNC patterns. This allows the SCAN921226H to operate in “open-loop” applications. Equally important is the Deserializer's ability to support hot insertion into a running backplane. In the open loop or hot insertion case, we assume the data stream is essentially random. Therefore, because lock time varies due to data stream characteristics, we cannot possibly predict exact lock time. However, please see Table 1 for some general random lock times under specific conditions. The primary constraint on the “random” lock time is the initial phase relation between the incoming data and the REFCLK when the Deserializer powers up. As described in the next paragraph, the data contained in the data stream can also affect lock time.

If a specific pattern is repetitive, the Deserializer could enter “false lock” - falsely recognizing the data pattern as the clocking bits. We refer to such a pattern as a repetitive multi-transition, RMT. This occurs when more than one Low-High transition takes place in a clock cycle over multiple cycles. This occurs when any bit, except DIN 9, is held at a low state and the adjacent bit is held high, creating a 0-1 transition. In the worst case, the Deserializer could become locked to the data pattern rather than the clock. Circuitry within the SCAN921226H can detect that the possibility of “false lock” exists. The circuitry accomplishes this by detecting more than one potential position for clocking bits. Upon detection, the circuitry will prevent the $\overline{\text{LOCK}}$ output from becoming active until the potential “false lock” pattern changes. The false lock detect circuitry expects the data will eventually change, causing the Deserializer to lose lock to the data pattern and then continue searching for clock bits in the serial data stream. Graphical representations of RMT are shown in Figure 2. Please note that RMT only applies to bits DIN0-DIN8.

Powerdown

When no data transfer occurs, you can use the Powerdown state. The Serializer and Deserializer use the Powerdown state, a low power sleep mode, to reduce power consumption. The Deserializer enters Powerdown when you drive $\overline{\text{PWRDN}}$ and REN low. The Serializer enters Powerdown when you drive $\overline{\text{PWRDN}}$ low. In Powerdown, the PLL stops and the outputs enter tri-state, which disables load current and reduces supply current to the milliampere range. To exit Powerdown, you must drive the $\overline{\text{PWRDN}}$ pin high.

Before valid data exchanges between the Serializer and Deserializer, you must reinitialize and resynchronize the devices to each other. Initialization of the Serializer takes 510 TCLK cycles. The Deserializer will initialize and assert $\overline{\text{LOCK}}$ high until lock to the Bus LVDS clock occurs.

Copyright © 2004–2013, Texas Instruments Incorporated

Tri-state

The Serializer enters tri-state when the DEN pin is driven low. This puts both driver output pins (DO+ and DO−) into tri-state. When you drive DEN high, the Serializer returns to the previous state, as long as all other control pins remain static (SYNC1, SYNC2, $\overline{\text{PWRDN}}$, TCLK_R/$\overline{\text{F}}$).

When you drive the REN pin low, the Deserializer enters tri-state. Consequently, the receiver output pins (ROUT0–ROUT9) and RCLK will enter tri-state. The $\overline{\text{LOCK}}$ output remains active, reflecting the state of the PLL.

Table 1.

Random Lock Times for the SCAN921226H (1)		
	80 MHz	Units
Maximum	18	µs
Mean	3.0	µs
Minimum	0.43	µs
Conditions:	PRBS 2^{15}, V_{CC} = 3.3V	

(1) Difference in lock times are due to different starting points in the data pattern with multiple parts.

Test Modes

In addition to the IEEE 1149.1 test access to the digital TTL pins, the SCAN921025H and SCAN921226H have two instructions to test the LVDS interconnects. The first is EXTEST. This is implemented at LVDS levels and is only intended as a go no-go test (e.g. missing cables). The second method is the RUNBIST instruction. It is an "at-system-speed" interconnect test. It is executed in approximately 28mS with a system clock speed of 80MHz. There are two bits in the RX BIST data register for notification of PASS/FAIL and TEST_COMPLETE. Pass indicates that the BER (Bit-Error-Rate) is better than 10^{-7}.

An important detail is that once both devices have the RUNBIST instruction loaded into their respective instruction registers, both devices must move into the RTI state within 4K system clocks (At a SCLK of 66Mhz and TCK of 1MHz this allows for 66 TCK cycles). This is not a concern when both devices are on the same scan chain or LSP, however, it can be a problem with some multi-drop devices. This test mode has been simulated and verified using TI's SCANSTA111.

DIN0 Held Low-DIN1 Held High Creates an RMT Pattern

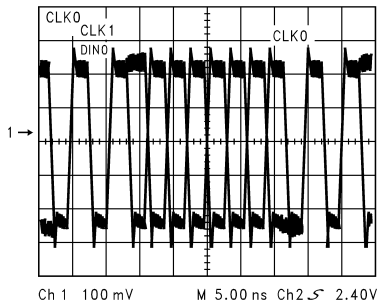

DIN4 Held Low-DIN5 Held High Creates an RMT Pattern

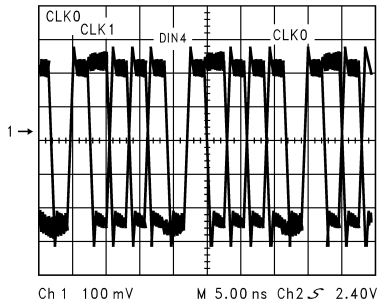

DIN8 Held Low-DIN9 Held High Creates an RMT Pattern

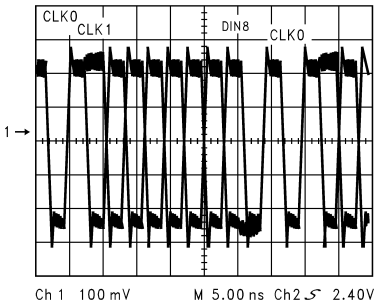

Figure 2. RMT Patterns Seen on the Bus LVDS Serial Output

These devices have limited built-in ESD protection. The leads should be shorted together or the device placed in conductive foam during storage or handling to prevent electrostatic damage to the MOS gates.

Absolute Maximum Ratings[(1)]

Supply Voltage (V_{CC})		−0.3V to +4V
LVCMOS/LVTTL Input Voltage		−0.3V to (V_{CC} +0.3V)
LVCMOS/LVTTL Output Voltage		−0.3V to (V_{CC} +0.3V)
Bus LVDS Receiver Input Voltage		−0.3V to +3.9V
Bus LVDS Driver Output Voltage		−0.3V to +3.9V
Bus LVDS Output Short Circuit Duration		10mS
Junction Temperature		+150°C
Storage Temperature		−65°C to +150°C
Lead Temperature	(Soldering, 4 seconds)	+220°C
Maximum Package Power Dissipation Capacity @ 25°C Package:	49L NFBGA	1.47 W
Package Derating:	49L NFBGA	11.8 mW/°C above +25°C
θ_{ja}		85°C/W
ESD Rating	HBM	>2kV
	MM	> 250V

(1) Absolute Maximum Ratings are those values beyond which the safety of the device cannot be ensured. They are not meant to imply that the devices should be operated at these limits. The table of Electrical Characteristics specifies conditions of device operation.

Recommended Operating Conditions

	Min	Nom	Max	Units
Supply Voltage (V_{CC})	3.0	3.3	3.6	V
Operating Free Air Temperature (T_A)	−40	+25	+125	°C
Receiver Input Range	0		2.4	V
Supply Noise Voltage (V_{CC})			100	mV_{P-P}

Copyright © 2004–2013, Texas Instruments Incorporated

Electrical Characteristics

Over recommended operating supply and temperature ranges unless otherwise specified.

Symbol	Parameter	Conditions		Min	Typ	Max	Units
SERIALIZER LVCMOS/LVTTL DC SPECIFICATIONS (apply to DIN0-9, TCLK, $\overline{PWRDN}$, TCLK_R/$\overline{F}$, SYNC1, SYNC2, DEN)							
V_{IH}	High Level Input Voltage			2.0		V_{CC}	V
V_{IL}	Low Level Input Voltage			GND		0.8	V
V_{CL}	Input Clamp Voltage	I_{CL} = −18 mA			-0.86	−1.5	V
I_{IN}	Input Current	V_{IN} = 0V or 3.6V		−10	±1	+10	µA
DESERIALIZER LVCMOS/LVTTL DC SPECIFICATIONS (apply to pins $\overline{PWRDN}$, RCLK_R/$\overline{F}$, REN, REFCLK = inputs; apply to pins ROUT, RCLK, $\overline{LOCK}$ = outputs)							
V_{IH}	High Level Input Voltage			2.0		V_{CC}	V
V_{IL}	Low Level Input Voltage			GND		0.8	V
V_{CL}	Input Clamp Voltage	I_{CL} = −18 mA			−0.62	−1.5	V
I_{IN}	Input Current	V_{IN} = 0V or 3.6V		−10	±1	+15	µA
V_{OH}	High Level Output Voltage	I_{OH} = −9 mA		2.2	3.0	V_{CC}	V
V_{OL}	Low Level Output Voltage	I_{OL} = 9 mA		GND	0.25	0.5	V
I_{OS}	Output Short Circuit Current	VOUT = 0V		−15	−47	−85	mA
I_{OZ}	Tri-state Output Current	$\overline{PWRDN}$ or REN = 0.8V, V_{OUT} = 0V or VCC		−10	±0.1	+10	µA
SERIALIZER Bus LVDS DC SPECIFICATIONS (apply to pins DO+ and DO−)							
V_{OD}	Output Differential Voltage (DO+)–(DO−)	RL = 27Ω, Figure 18		200	290		mV
ΔV_{OD}	Output Differential Voltage Unbalance					35	mV
V_{OS}	Offset Voltage			1.05	1.1	1.3	V
ΔV_{OS}	Offset Voltage Unbalance				4.8	35	mV
I_{OS}	Output Short Circuit Current	D0 = 0V, DIN = High,$\overline{PWRDN}$ and DEN = 2.4V			−56	−90	mA
I_{OZ}	Tri-state Output Current	$\overline{PWRDN}$ or DEN = 0.8V, DO = 0V or VCC		−10	±1	+10	µA
I_{OX}	Power-Off Output Current	VCC = 0V, DO=0V or 3.6V		−20	±1	+30	µA
DESERIALIZER Bus LVDS DC SPECIFICATIONS (apply to pins RI+ and RI−)							
VTH	Differential Threshold High Voltage	VCM = +1.1V			+6	+50	mV
VTL	Differential Threshold Low Voltage			−50	−12		mV
I_{IN}	Input Current	V_{IN} = +2.4V, V_{CC} = 3.6V or 0V		−10	±1	+10	µA
		V_{IN} = 0V, V_{CC} = 3.6V or 0V		−10	±0.05	+10	µA
SERIALIZER SUPPLY CURRENT (apply to pins DVCC and AVCC)							
I_{CCD}	Serializer Supply Current	RL = 27Ω	f = 20 MHz		45	60	mA
	Worst Case	Figure 3	f = 80 MHz		90	105	mA
I_{CCXD}	Serializer Supply Current Powerdown	$\overline{PWRDN}$ = 0.8V, f = 80MHz			0.2	2.0	mA
DESERIALIZER SUPPLY CURRENT (apply to pins DVCC and AVCC)							
I_{CCR}	Deserializer Supply Current	C_L = 15 pF	f = 20 MHz		50	75	mA
	Worst Case	Figure 4	f = 80 MHz		100	120	mA
I_{CCXR}	Deserializer Supply Current Powerdown	$\overline{PWRDN}$ = 0.8V, REN = 0.8V			0.36	1.0	mA
SCAN CIRCUITRY DC SPECIFICATIONS, SERIALIZER AND DESERIALIZER (applies to SCAN pins as noted)							
V_{IH}	High Level Input Voltage	V_{CC} = 3.0 to 3.6V, pins TCK, TMS, TDI, and $\overline{TRST}$		2.0		V_{CC}	V
V_{IL}	Low Level Input Voltage	V_{CC} = 3.0 to 3.6V, pins TCK, TMS, TDI, and $\overline{TRST}$		GND		0.8	V
V_{CL}	Input Clamp Voltage	V_{CC} = 3.0V, I_{CL} = −18 mA, pins TCK, TMS, TDI, and $\overline{TRST}$			−0.85	−1.5	V
I_{IH}	Input Current	V_{CC} = 3.6V, V_{IN} = 3.6V, pins TCK, TMS, TDI, and $\overline{TRST}$			1	+10	µA
I_{IL}	Input Current	V_{CC} = 3.6V, V_{IN} = 0.0V, TCK Input		-10	-1		µA

Copyright © 2004–2013, Texas Instruments Incorporated

Electrical Characteristics (continued)

Over recommended operating supply and temperature ranges unless otherwise specified.

Symbol	Parameter	Conditions	Min	Typ	Max	Units
I_{ILR}	Input Current	V_{CC} = 3.6V, V_{IN} = 0V, pins TMS, TDI, and $\overline{TRST}$	-20	-10		μA
V_{OH}	High Level Output Voltage	V_{CC} = 3.0V, I_{OH} = −12 mA, TDO output	2.2	2.6		V
V_{OL}	Low Level Output Voltage	V_{CC} = 3.0V, I_{OL} = 12 mA, TDO output		0.3	0.5	V
I_{OS}	Output Short Circuit Current	V_{CC} = 3.6V, V_{OUT} = 0.0V, TDO output	-15	-90	-120	mA
I_{OZ}	Tri-state Output Current	$\overline{PWRDN}$ or REN = 0.8V, V_{OUT} = 0V or VCC	−10	0	+10	μA

Serializer Timing Requirements for TCLK

Over recommended operating supply and temperature ranges unless otherwise specified.

Symbol	Parameter	Conditions	Min	Typ	Max	Units
t_{TCP}	Transmit Clock Period		12.5	T	50.0	ns
t_{TCIH}	Transmit Clock High Time		0.4T	0.5T	0.6T	ns
t_{TCIL}	Transmit Clock Low Time		0.4T	0.5T	0.6T	ns
t_{CLKT}	TCLK Input Transition Time			3	6	ns
t_{JIT}	TCLK Input Jitter				150	ps (RMS)

Serializer Switching Characteristics

Over recommended operating supply and temperature ranges unless otherwise specified.

Symbol	Parameter	Conditions		Min	Typ	Max	Units
t_{LLHT}	Bus LVDS Low-to-High Transition Time	R_L = 27Ω C_L=10pF to GND Figure 5(1)			0.2	0.4	ns
t_{LHLT}	Bus LVDS High-to-Low Transition Time				0.25	0.4	ns
t_{DIS}	DIN (0-9) Setup to TCLK	R_L = 27Ω, C_L=10pF to GND Figure 8		0			ns
t_{DIH}	DIN (0-9) Hold from TCLK			4.0			ns
t_{HZD}	DO ± HIGH to Tri-state Delay	R_L = 27Ω, C_L=10pF to GND Figure 9(2)			3	10	ns
t_{LZD}	DO ± LOW to Tri-state Delay				3	10	ns
t_{ZHD}	DO ± Tri-state to HIGH Delay				5	10	ns
t_{ZLD}	DO ± Tri-state to LOW Delay				6.5	10	ns
t_{SPW}	SYNC Pulse Width	R_L = 27Ω Figure 11		5*t_{TCP}			ns
t_{PLD}	Serializer PLL Lock Time			510*t_{TCP}		513*t_{TCP}	ns
t_{SD}	Serializer Delay	R_L = 27Ω, Figure 12		t_{TCP}+ 1.0	t_{TCP}+ 2.5	t_{TCP}+ 3.5	ns
t_{DJIT}	Deterministic Jitter	R_L = 27Ω, C_L=10pF to GND(3)	20MHz	-330		140	ps
			80MHz	-130	-40	+60	ps
t_{RJIT}	Random Jitter				6	10	ps (RMS)

(1) t_{LLHT} and t_{LHLT} specifications are Guaranteed By Design (GBD) using statistical analysis.
(2) Because the Serializer is in tri-state mode, the Deserializer will lose PLL lock and have to resynchronize before data transfer.
(3) t_{DJIT} specifications are Guaranteed By Design using statistical analysis.

Copyright © 2004–2013, Texas Instruments Incorporated

Deserializer Timing Requirements for REFCLK

Over recommended operating supply and temperature ranges unless otherwise specified.

Symbol	Parameter	Conditions	Min	Typ	Max	Units
t_{RFCP}	REFCLK Period		12.5	T	50.0	ns
t_{RFDC}	REFCLK Duty Cycle		30	50	70	%
t_{RFCP} / t_{TCP}	Ratio of REFCLK to TCLK		95	1	105	
t_{RFTT}	REFCLK Transition Time			3	6	ns

Deserializer Switching Characteristics

Over recommended operating supply and temperature ranges unless otherwise specified.

Symbol	Parameter	Conditions	Pin/Freq.	Min	Typ	Max	Units
t_{RCP}	Receiver out Clock Period	$t_{RCP} = t_{TCP}$ Figure 12	RCLK	12.5		50.0	ns
t_{CLH}	CMOS/TTL Low-to-High Transition Time	CL = 15 pF Figure 6	Rout(0-9), $\overline{LOCK}$, RCLK		1.2	4	ns
t_{CHL}	CMOS/TTL High-to-Low Transition Time				1.1	4	ns
t_{DD}	Deserializer Delay Figure 13	All Temp, All Freq		$1.75*t_{RCP}+1.25$	$1.75*t_{RCP}+5.0$	$1.75*t_{RCP}+8.5$	ns
		Room Temp, 3.3V	20MHz	$1.75*t_{RCP}+2.25$	$1.75*t_{RCP}+5.0$	$1.75*t_{RCP}+8.0$	ns
		Room Temp, 3.3V	80MHz	$1.75*t_{RCP}+2.25$	$1.75*t_{RCP}+5.0$	$1.75*t_{RCP}+8.0$	ns
t_{ROS}	ROUT Data Valid before RCLK	Figure 14	RCLK 20MHz	$0.4*t_{RCP}$	$0.5*t_{RCP}$		ns
			RCLK 80MHz	$0.35*t_{RCP}$	$0.5*t_{RCP}$		ns
t_{ROH}	ROUT Data Valid after RCLK	Figure 14	20MHz	$-0.4*t_{RCP}$	$-0.5*t_{RCP}$		ns
			80MHz	$-0.35*t_{RCP}$	$-0.5*t_{RCP}$		ns
t_{RDC}	RCLK Duty Cycle			45	50	55	%
t_{HZR}	HIGH to Tri-state Delay	Figure 15	Rout(0-9)		2.8	10	ns
t_{LZR}	LOW to Tri-state Delay				2.8	10	ns
t_{ZHR}	Tri-state to HIGH Delay				4.2	10	ns
t_{ZLR}	Tri-state to LOW Delay				4.2	10	ns
t_{DSR1}	Deserializer PLL Lock Time from PWRDWN (with SYNCPAT)	Figure 16 Figure 17(1)	20MHz		1.7	3.5	µs
			80MHz		1.0	2.5	µs
t_{DSR2}	Deserializer PLL Lock time from SYNCPAT		20MHz		0.65	1.5	µs
			80MHz		0.29	0.8	µs
t_{ZHLK}	Tri-state to HIGH Delay (power-up)		$\overline{LOCK}$		3.7	12	ns
t_{RNMI-R}	Ideal Noise Margin Right Figure 21	VCC = 3.15 to 3.6V	80MHz			+335	ps
		VCC = 3.0V				+215	
			20MHz			+1	ns
t_{RNMI-L}	Ideal Noise Margin Left Figure 21	VCC = 3.15 to 3.6V	80MHz	-395			ps
		VCC = 3.0V		-520			
			20MHz	-1			ns

(1) For the purpose of specifying deserializer PLL performance, tDSR1 and tDSR2 are specified with the REFCLK running and stable, and with specific conditions for the incoming data stream (SYNCPATs). It is recommended that the derserializer be initialized using either t_{DSR1} timing or t_{DSR2} timing. t_{DSR1} is the time required for the deserializer to indicate lock upon power-up or when leaving the power-down mode. Synchronization patterns should be sent to the device before initiating either condition. t_{DSR2} is the time required to indicate lock for the powered-up and enabled deserializer when the input (RI+ and RI-) conditions change from not receiving data to receiving synchronization patterns (SYNCPATs).

Copyright © 2004–2013, Texas Instruments Incorporated

SCAN Circuitry Timing Requirements

Symbol	Parameter	Conditions	Min	Typ	Max	Units
f_{MAX}	Maximum TCK Clock Frequency	R_L = 500Ω, C_L = 35 pF	25.0	50.0		MHz
t_S	TDI to TCK, H or L		1.0			ns
t_H	TDI to TCK, H or L		2.0			ns
t_S	TMS to TCK, H or L		2.5			ns
t_H	TMS to TCK, H or L		1.5			ns
t_W	TCK Pulse Width, H or L		10.0			ns
t_W	$\overline{TRST}$ Pulse Width, L		2.5			ns
t_{REC}	Recovery Time, $\overline{TRST}$ to TCK		2.0			ns

Copyright © 2004–2013, Texas Instruments Incorporated

AC Timing Diagrams and Test Circuits

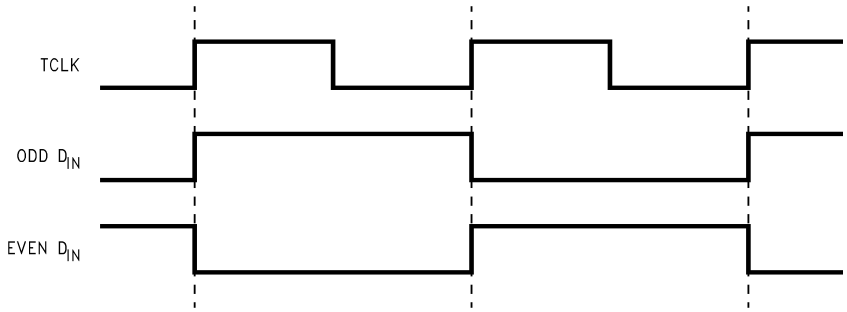

Figure 3. "Worst Case" Serializer ICC Test Pattern

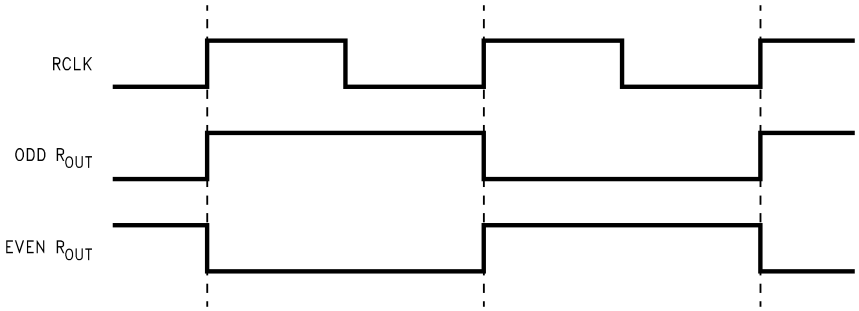

Figure 4. "Worst Case" Deserializer ICC Test Pattern

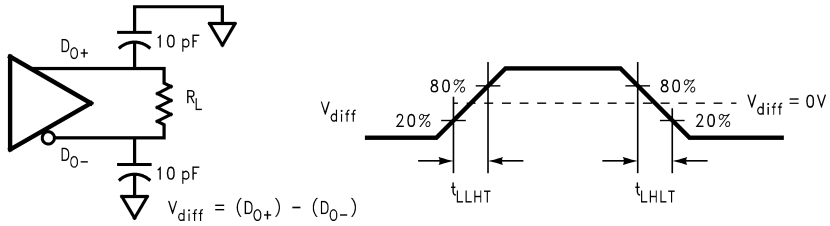

Figure 5. Serializer Bus LVDS Output Load and Transition Times

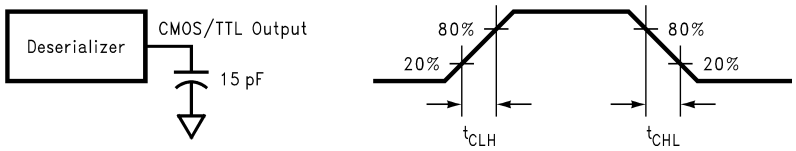

Figure 6. Deserializer CMOS/TTL Output Load and Transition Times

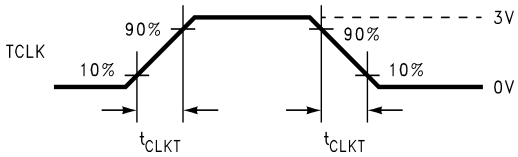

Figure 7. Serializer Input Clock Transition Time

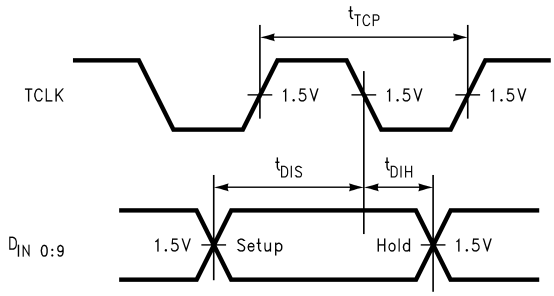

Timing shown for TCLK_R/$\overline{F}$ = LOW

Figure 8. Serializer Setup/Hold Times

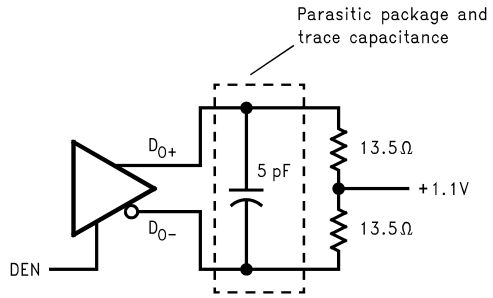

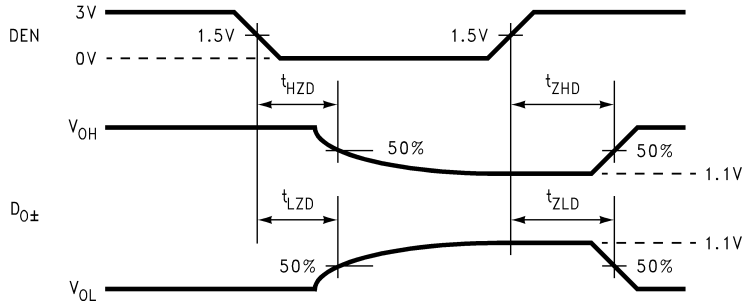

Figure 9. Serializer Tri-state Test Circuit and Timing

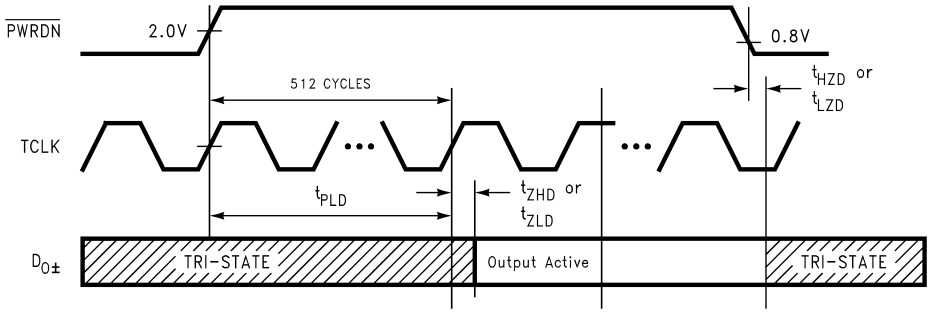

Figure 10. Serializer PLL Lock Time, and $\overline{\text{PWRDN}}$ Tri-state Delays

Copyright © 2004–2013, Texas Instruments Incorporated

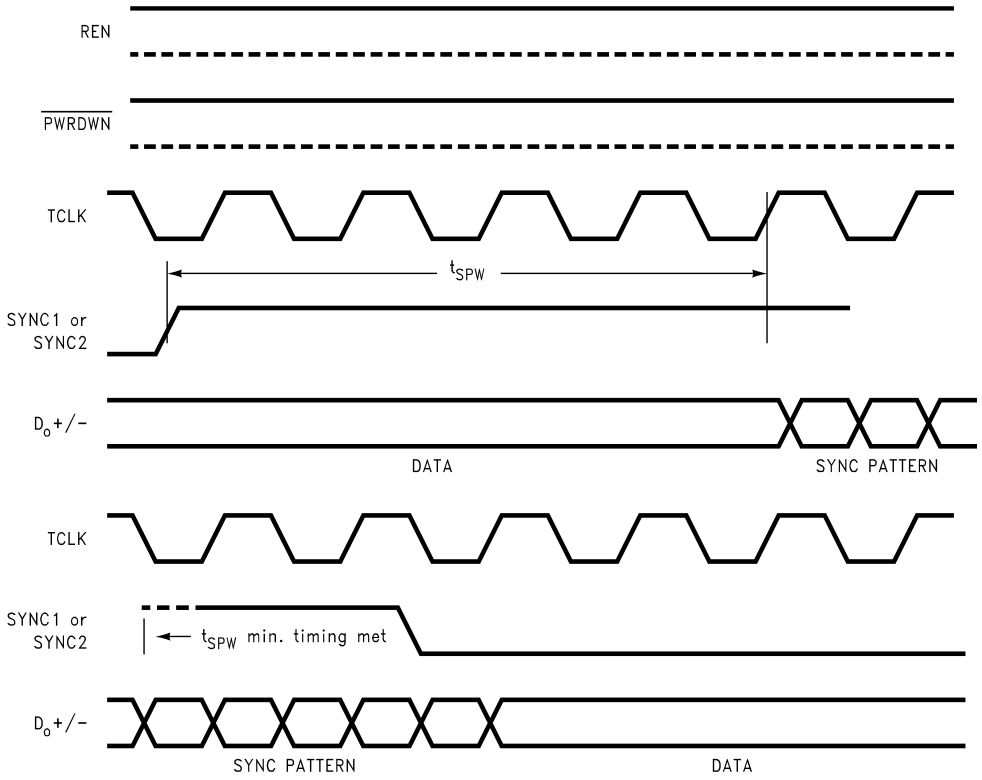

Figure 11. SYNC Timing Delays

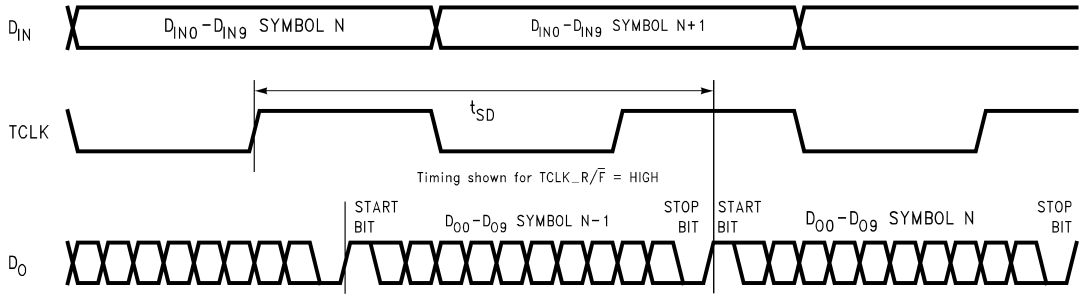

Figure 12. Serializer Delay

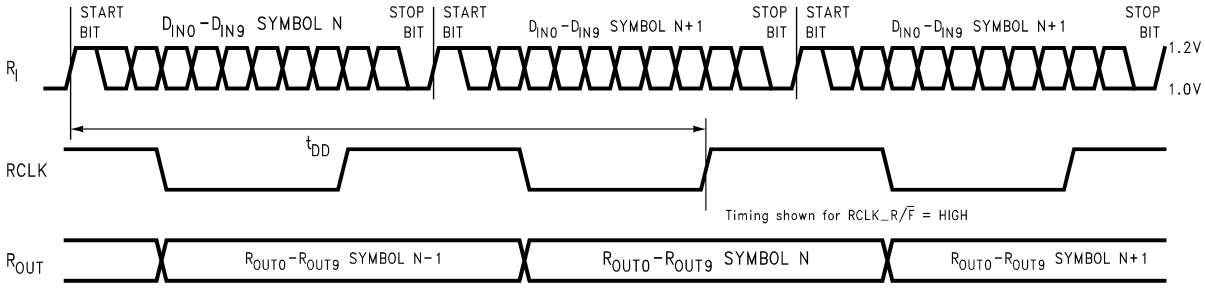

Figure 13. Deserializer Delay

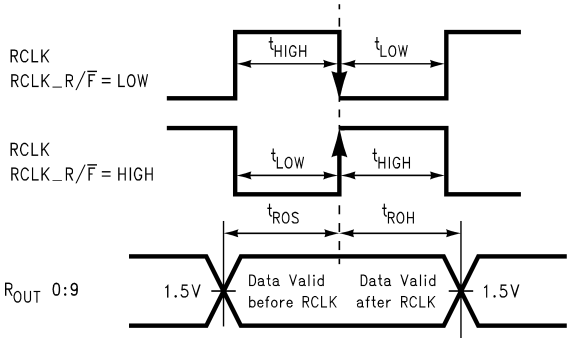

Timing shown for RCLK_R/F = LOW

Duty Cycle (t_{RDC}) = $\frac{t_{HIGH}}{t_{HIGH} + t_{LOW}}$

Figure 14. Deserializer Data Valid Out Times

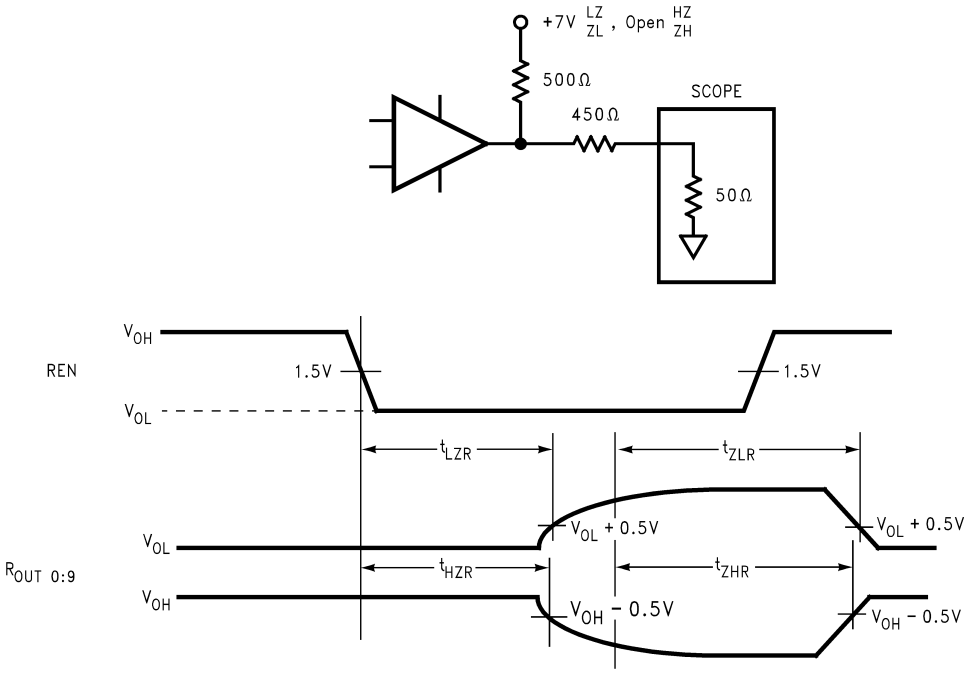

Figure 15. Deserializer Tri-state Test Circuit and Timing

Copyright © 2004–2013, Texas Instruments Incorporated

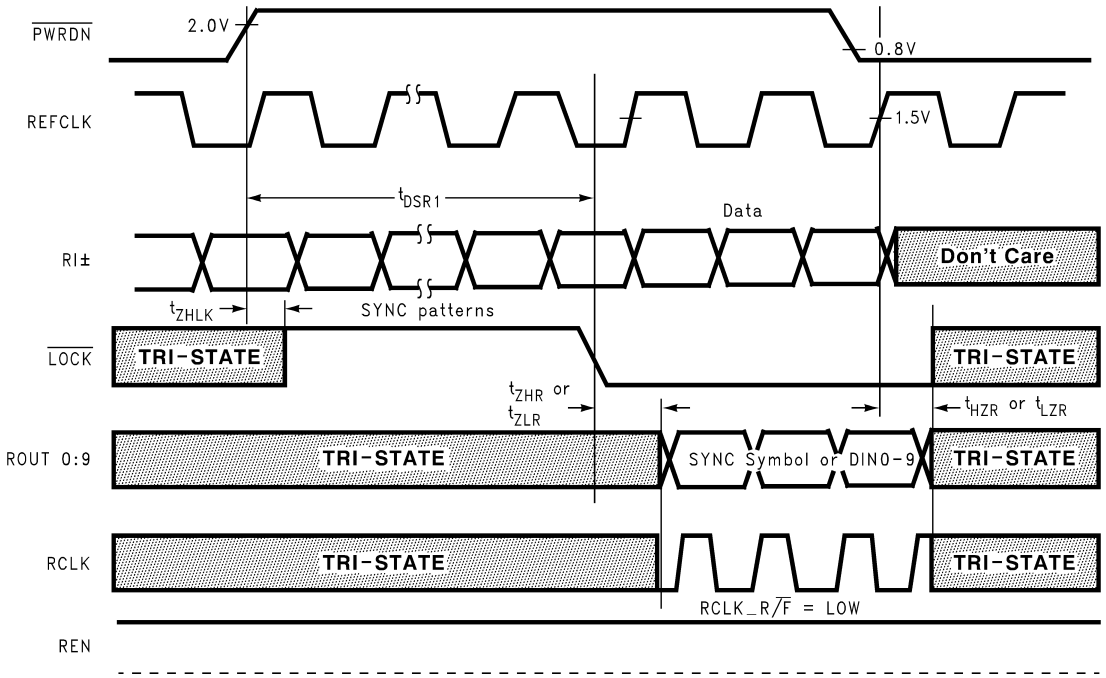

Figure 16. Deserializer PLL Lock Times and $\overline{\text{PWRDN}}$ Tri-state Delays

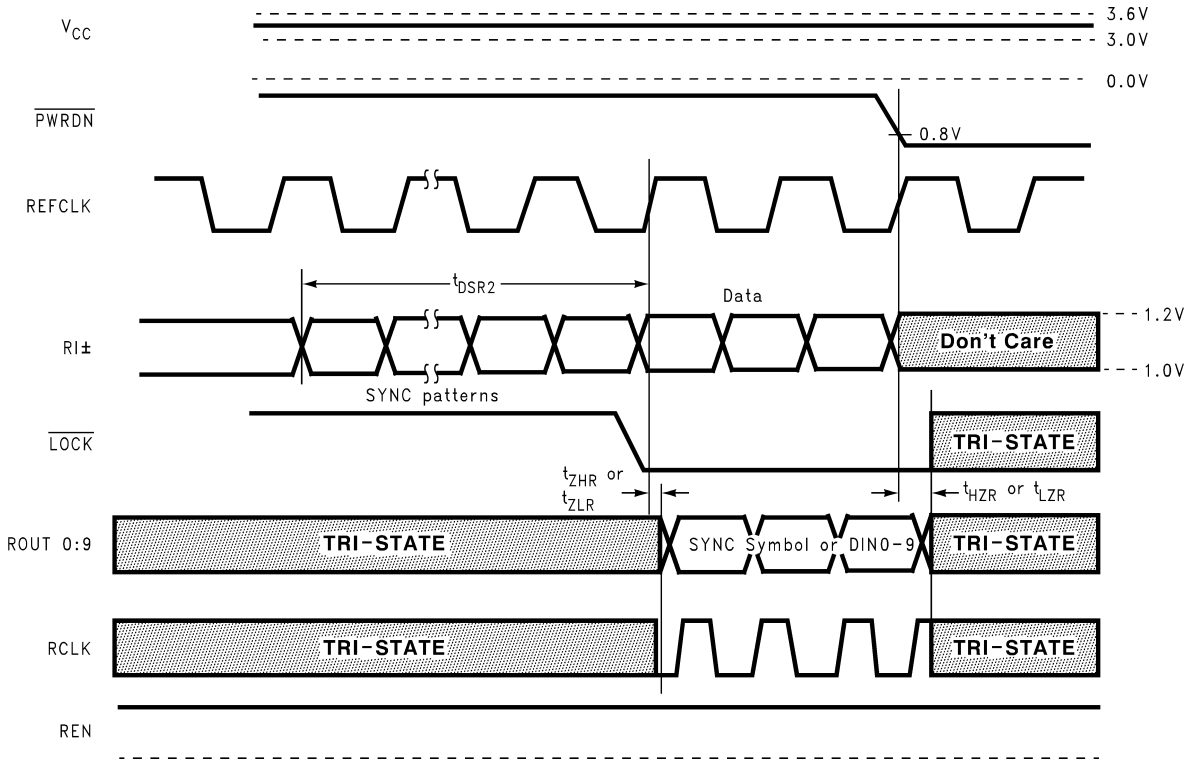

Figure 17. Deserializer PLL Lock Time from SyncPAT

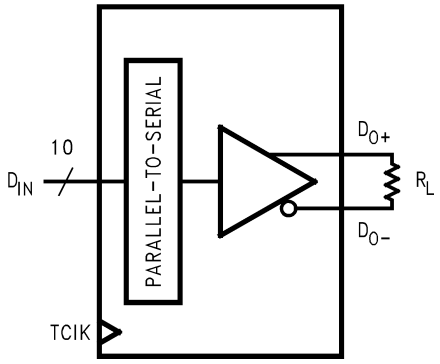

V_{OD} = (DO^+)–(DO^-).
Differential output signal is shown as (DO+)–(DO−), device in Data Transfer mode.

Figure 18. V_{OD} Diagram

Copyright © 2004–2013, Texas Instruments Incorporated

APPLICATION INFORMATION

USING THE SCAN921025H AND SCAN921226H

The Serializer and Deserializer chipset is an easy to use transmitter and receiver pair that sends 10 bits of parallel LVTTL data over a serial Bus LVDS link up to 800 Mbps. An on-board PLL serializes the input data and embeds two clock bits within the data stream. The Deserializer uses a separate reference clock (REFCLK) and an onboard PLL to extract the clock information from the incoming data stream and then deserialize the data. The Deserializer monitors the incoming clock information, determines lock status, and asserts the $\overline{LOCK}$ output high when loss of lock occurs.

POWER CONSIDERATIONS

An all CMOS design of the Serializer and Deserializer makes them inherently low power devices. In addition, the constant current source nature of the Bus LVDS outputs minimizes the slope of the speed vs. I_{CC} curve of conventional CMOS designs.

POWERING UP THE DESERIALIZER

The SCAN921226H can be powered up at any time by following the proper sequence. The REFCLK input can be running before the Deserializer powers up, and it must be running in order for the Deserializer to lock to incoming data. The Deserializer outputs will remain in tri-state until the Deserializer detects data transmission at its inputs and locks to the incoming data stream.

TRANSMITTING DATA

Once you power up the Serializer and Deserializer, they must be phase locked to each other to transmit data. Phase locking occurs when the Deserializer locks to incoming data or when the Serializer sends patterns. The Serializer sends SYNC patterns whenever the SYNC1 or SYNC2 inputs are high. The $\overline{LOCK}$ output of the Deserializer remains high until it has locked to the incoming data stream. Connecting the $\overline{LOCK}$ output of the Deserializer to one of the SYNC inputs of the Serializer will ensure that enough SYNC patterns are sent to achieve Deserializer lock.

The Deserializer can also lock to incoming data by simply powering up the device and allowing the “random lock” circuitry to find and lock to the data stream.

While the Deserializer $\overline{LOCK}$ output is low, data at the Deserializer outputs (ROUT0-9) is valid, except for the specific case of loss of lock during transmission which is further discussed in the RECOVERING FROM LOCK LOSS section below.

NOISE MARGIN

The Deserializer noise margin is the amount of input jitter (phase noise) that the Deserializer can tolerate and still reliably receive data. Various environmental and systematic factors include:

Serializer: TCLK jitter, V_{CC} noise (noise bandwidth and out-of-band noise)

Media: ISI, Large V_{CM} shifts

Deserializer: V_{CC} noise

RECOVERING FROM LOCK LOSS

In the case where the Deserializer loses lock during data transmission, up to 3 cycles of data that were previously received can be invalid. This is due to the delay in the lock detection circuit. The lock detect circuit requires that invalid clock information be received 4 times in a row to indicate loss of lock. Since clock information has been lost, it is possible that data was also lost during these cycles. Therefore, after the Deserializer relocks to the incoming data stream and the Deserializer $\overline{LOCK}$ pin goes low, at least three previous data cycles should be suspect for bit errors.

The Deserializer can relock to the incoming data stream by making the Serializer resend SYNC patterns, as described above, or by random locking, which can take more time, depending on the data patterns being received.

Copyright © 2004–2013, Texas Instruments Incorporated

HOT INSERTION

All the BLVDS devices are hot pluggable if you follow a few rules. When inserting, ensure the Ground pin(s) makes contact first, then the VCC pin(s), and then the I/O pins. When removing, the I/O pins should be unplugged first, then the VCC, then the Ground. Random lock hot insertion is illustrated in Figure 22.

PCB CONSIDERATIONS

The Bus LVDS Serializer and Deserializer should be placed as close to the edge connector as possible. In multiple Deserializer applications, the distance from the Deserializer to the slot connector appears as a stub to the Serializer driving the backplane traces. Longer stubs lower the impedance of the bus, increase the load on the Serializer, and lower the threshold margin at the Deserializers. Deserializer devices should be placed much less than one inch from slot connectors. Because transition times are very fast on the Serializer Bus LVDS outputs, reducing stub lengths as much as possible is the best method to ensure signal integrity.

TRANSMISSION MEDIA

The Serializer and Deserializer can also be used in point-to-point configuration of a backplane, through a PCB trace, or through twisted pair cable. In point-to-point configuration, the transmission media need only be terminated at the receiver end. Please note that in point-to-point configuration, the potential of offsetting the ground levels of the Serializer vs. the Deserializer must be considered. Also, Bus LVDS provides a +/− 1.2V common mode range at the receiver inputs.

FAILSAFE BIASING FOR THE SCAN921226H

The SCAN921226H has an improved input threshold sensitivity of +/− 50mV versus +/− 100mV for the DS92LV1210 or DS92LV1212. This allows for greater differential noise margin in the SCAN921226H. However, in cases where the receiver input is not being actively driven, the increased sensitivity of the SCAN921226H can pickup noise as a signal and cause unintentional locking. For example, this can occur when the input cable is disconnected.

External resistors can be added to the receiver circuit board to prevent noise pick-up. Typically, the non-inverting receiver input is pulled up and the inverting receiver input is pulled down by high value resistors. the pull-up and pull-down resistors (R_1 and R_2) provide a current path through the termination resistor (R_L) which biases the receiver inputs when they are not connected to an active driver. The value of the pull-up and pull-down resistors should be chosen so that enough current is drawn to provide a +15mV drop across the termination resistor. Please see Figure 19 for the Failsafe Biasing Setup.

USING t_{DJIT} AND t_{RNM} TO VALIDATE SIGNAL QUALITY

The parameter t_{RNM} is calculated by first measuring how much of the ideal bit the receiver needs to ensure correct sampling. After determining this amount, what remains of the ideal bit that is available for external sources of noise is called t_{RNM}. t_{RNM} includes transmitter jitter.

Please refer to Figure 20 and Figure 21 for a graphic representation of t_{DJIT} and t_{RNM}. Also, for a more detailed explanation of t_{RNM}, please see the Application Note titled 'How to Validate BLVDS SER/DES Signal Integrity Using an Eye Mask' (SNLA053).

The vertical limits of the mask are determined by the SCAN921226H receiver input threshold of +/− 50mV.

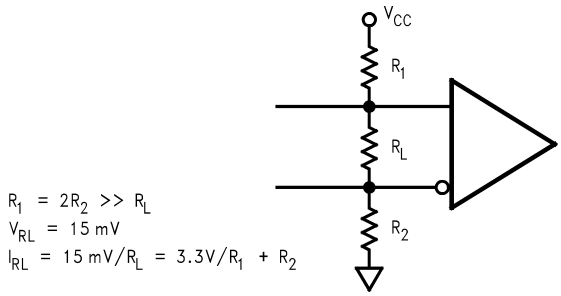

Figure 19. Failsafe Biasing Setup

Copyright © 2004–2013, Texas Instruments Incorporated

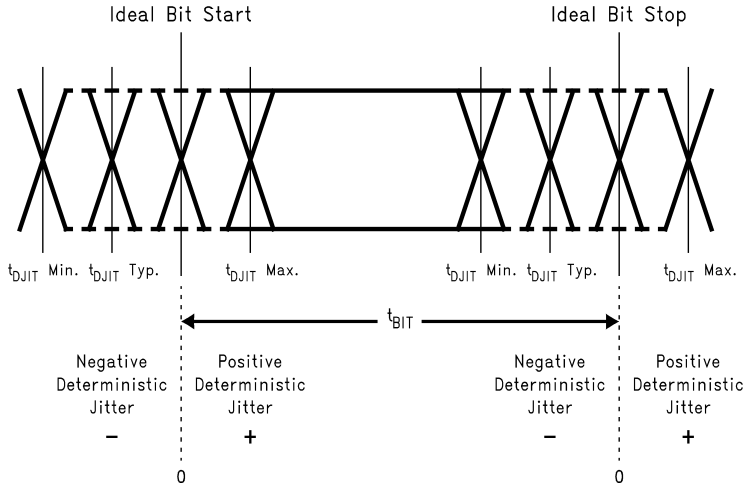

Figure 20. Deterministic Jitter and Ideal Bit Position

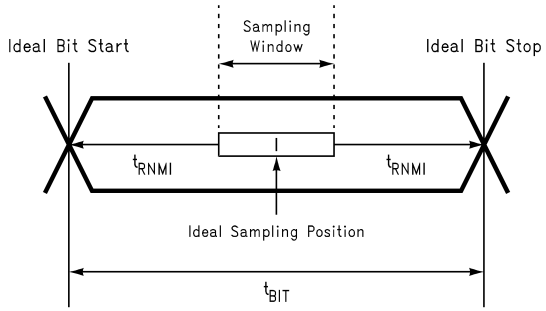

$$\text{Ideal Sampling Position} = \frac{(t_{BIT})}{2}$$

t_{RNMI-L} is the ideal noise margin on the left of the figure, it is a negative value to indicate early with respect to ideal.
t_{RNMI-R} is the ideal noise margin on the right of the above figure, it is a positive value to indicate late with respect to ideal.

Figure 21. Ideal Deserializer Noise Margin (t_{RNMI}) and Sampling Window

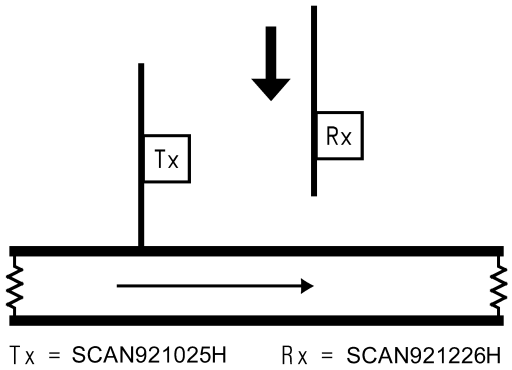

Figure 22. Random Lock Hot Insertion

Pin Diagrams

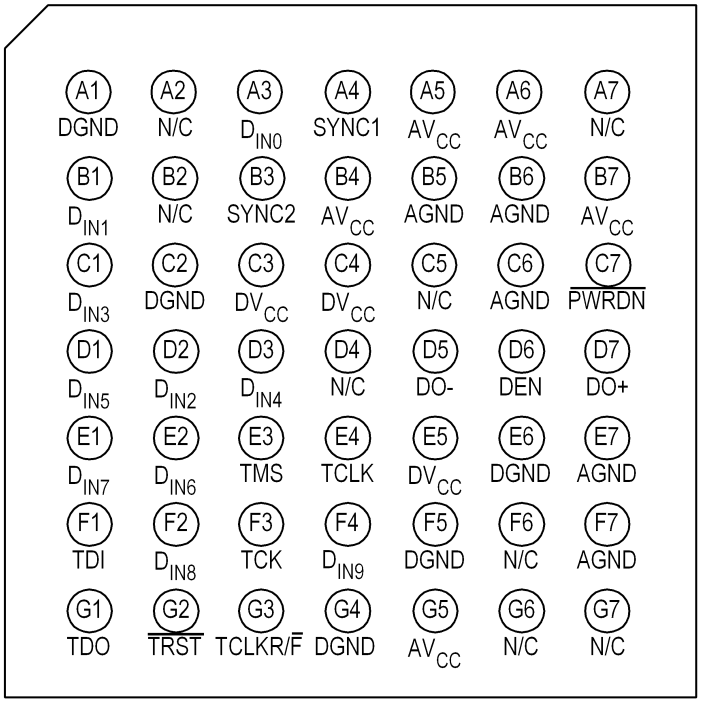

Figure 23. SCAN921025HSM - Serializer (Top View)

Figure 24.

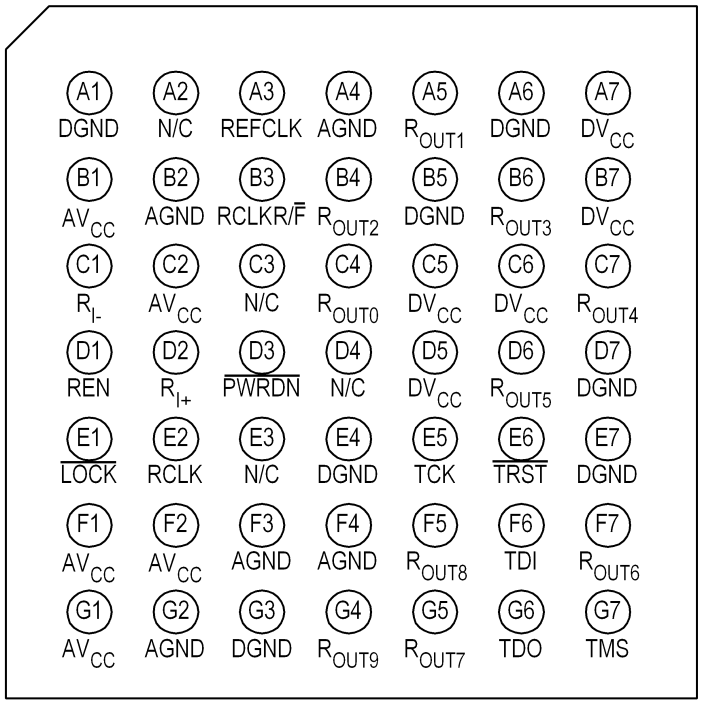

Figure 25. SCAN921226HSM - Deserializer (Top View)

Copyright © 2004–2013, Texas Instruments Incorporated

Serializer Pin Descriptions

Pin Name	I/O	Ball Id.	Description
DIN	I	A3, B1, C1, D1, D2, D3, E1, E2, F2, F4	Data Input. LVTTL levels inputs. Data on these pins are loaded into a 10-bit input register.
TCLKR/$\overline{F}$	I	G3	Transmit Clock Rising/Falling strobe select. LVTTL level input. Selects TCLK active edge for strobing of DIN data. High selects rising edge. Low selects falling edge.
DO+	O	D7	+ Serial Data Output. Non-inverting Bus LVDS differential output.
DO−	O	D5	− Serial Data Output. Inverting Bus LVDS differential output.
DEN	I	D6	Serial Data Output Enable. LVTTL level input. A low puts the Bus LVDS outputs in tri-state.
$\overline{PWRDN}$	I	C7	Powerdown. LVTTL level input. $\overline{PWRDN}$ driven low shuts down the PLL and tri-states outputs putting the device into a low power sleep mode.
TCLK	I	E4	Transmit Clock. LVTTL level input. Input for 20MHz – 80MHz system clock.
SYNC	I	A4, B3	Assertion of SYNC (high) for at least 1024 synchronization symbols to be transmitted on the Bus LVDS serial output. Synchronization symbols continue to be sent if SYNC continues to be asserted. TTL level input. The two SYNC pins are ORed.
DVCC	I	C3, C4, E5	Digital Circuit power supply.
DGND	I	A1, C2, F5, E6, G4	Digital Circuit ground.
AVCC	I	A5, A6, B4, B7, G5	Analog power supply (PLL and Analog Circuits).
AGND	I	B5, B6, C6, E7, F7	Analog ground (PLL and Analog Circuits).
TDI	I	F1	Test Data Input to support IEEE 1149.1. There is an internal pullup resistor that defaults this input to high per IEEE 1149.1.
TDO	O	G1	Test Data Output to support IEEE 1149.1
TMS	I	E3	Test Mode Select Input to support IEEE 1149.1. There is an internal pullup resistor that defaults this input to high per IEEE 1149.1.
TCK	I	F3	Test Clock Input to support IEEE 1149.1
$\overline{TRST}$	I	G2	Test Reset Input to support IEEE 1149.1. There is an internal pullup resistor that defaults this input to high per IEEE 1149.1.
N/C	N/A	A2, A7, B2, C5, D4, F6, G6, G7	Leave open circuit, do not connect

Copyright © 2004–2013, Texas Instruments Incorporated

Deserializer Pin Descriptions

Pin Name	I/O	Ball Id.	Description
ROUT	O	A5, B4, B6, C4, C7, D6, F5, F7, G4, G5	Data Output. ±9 mA CMOS level outputs.
RCLKR/$\overline{F}$	I	B3	Recovered Clock Rising/Falling strobe select. TTL level input. Selects RCLK active edge for strobing of ROUT data. High selects rising edge. Low selects falling edge.
RI+	I	D2	+ Serial Data Input. Non-inverting Bus LVDS differential input.
RI−	I	C1	− Serial Data Input. Inverting Bus LVDS differential input.
$\overline{PWRDN}$	I	D3	Powerdown. TTL level input. $\overline{PWRDN}$ driven low shuts down the PLL and tri-states outputs putting the device into a low power sleep mode.
$\overline{LOCK}$	O	E1	$\overline{LOCK}$ goes low when the Deserializer PLL locks onto the embedded clock edge. CMOS level output. Totem pole output structure, does not directly support wired OR connections.
RCLK	O	E2	Recovered Clock. Parallel data rate clock recovered from embedded clock. Used to strobe ROUT, CMOS level output.
REN	I	D1	Output Enable. TTL level input. When driven low, tri-states ROUT0–ROUT9 and RCLK.
DVCC	I	A7, B7, C5, C6, D5	Digital Circuit power supply.
DGND	I	A1, A6, B5, D7, E4, E7, G3	Digital Circuit ground.
AVCC	I	B1, C2, F1, F2, G1	Analog power supply (PLL and Analog Circuits).
AGND	I	A4, B2, F3, F4, G2	Analog ground (PLL and Analog Circuits).
REFCLK	I	A3	Use this pin to supply a REFCLK signal for the internal PLL frequency.
TDI	I	F6	Test Data Input to support IEEE 1149.1. There is an internal pullup resistor that defaults this input to high per IEEE 1149.1.
TDO	O	G6	Test Data Output to support IEEE 1149.1
TMS	I	G7	Test Mode Select Input to support IEEE 1149.1. There is an internal pullup resistor that defaults this input to high per IEEE 1149.1.
TCK	I	E5	Test Clock Input to support IEEE 1149.1
$\overline{TRST}$	I	E6	Test Reset Input to support IEEE 1149.1. There is an internal pullup resistor that defaults this input to high per IEEE 1149.1.
N/C	N/A	A2, C3, D4, E3	Leave open circuit, do not connect

Deserializer Truth Table

INPUTS		OUTPUTS		
$\overline{PWRDN}$	REN	ROUT [0:9] (1)	$\overline{LOCK}$ (2)	RCLK (3) (1)
H (4)	H	Z	H	Z
H	H	Active	L	Active
L	X	Z	Z	Z
H	L	Z	Active	Z

(1) ROUT and RCLK are tri-stated when $\overline{LOCK}$ is asserted High.
(2) $\overline{LOCK}$ Active indicates the $\overline{LOCK}$ output will reflect the state of the Deserializer with regard to the selected data stream.
(3) RCLK Active indicates the RCLK will be running if the Deserializer is locked. The Timing of RCLK with respect to ROUT is determined by RCLK_R/$\overline{F}$.
(4) During Power-up.

Copyright © 2004–2013, Texas Instruments Incorporated

REVISION HISTORY

Changes from Revision B (May 2013) to Revision C	Page
• Changed layout of National Data Sheet to TI format.	22

PACKAGING INFORMATION

Orderable part number	Status (1)	Material type (2)	Package | Pins	Package qty | Carrier	RoHS (3)	Lead finish/ Ball material (4)	MSL rating/ Peak reflow (5)	Op temp (°C)	Part marking (6)
SCAN921025HSM	NRND	Production	NFBGA (NZA) | 49	416 | JEDEC TRAY (10+1)	No	Call TI	Level-3-235C-168 HR	-40 to 125	SCAN921025 HSM
SCAN921025HSM.A	NRND	Production	NFBGA (NZA) | 49	416 | JEDEC TRAY (10+1)	No	Call TI	Level-3-235C-168 HR	-40 to 125	SCAN921025 HSM
SCAN921025HSM/NOPB	Active	Production	NFBGA (NZA) | 49	416 | EIAJ TRAY (5+1)	Yes	SNAGCU	Level-4-260C-72 HR	-40 to 125	SCAN921025 HSM
SCAN921025HSM/NOPB.A	Active	Production	NFBGA (NZA) | 49	416 | EIAJ TRAY (5+1)	Yes	SNAGCU	Level-4-260C-72 HR	-40 to 125	SCAN921025 HSM
SCAN921025HSMX/NO.A	Active	Production	NFBGA (NZA) | 49	2000 | LARGE T&R	Yes	SNAGCU	Level-4-260C-72 HR	-40 to 125	SCAN921025 HSM
SCAN921025HSMX/NOPB	Active	Production	NFBGA (NZA) | 49	2000 | LARGE T&R	Yes	SNAGCU	Level-4-260C-72 HR	-40 to 125	SCAN921025 HSM
SCAN921226HSM	NRND	Production	NFBGA (NZA) | 49	416 | EIAJ TRAY (10+1)	No	Call TI	Level-3-235C-168 HR	-40 to 125	SCAN921226 HSM
SCAN921226HSM.A	NRND	Production	NFBGA (NZA) | 49	416 | EIAJ TRAY (10+1)	No	Call TI	Level-3-235C-168 HR	-40 to 125	SCAN921226 HSM
SCAN921226HSM/NOPB	Active	Production	NFBGA (NZA) | 49	416 | EIAJ TRAY (10+1)	Yes	SNAGCU	Level-4-260C-72 HR	-40 to 125	SCAN921226 HSM
SCAN921226HSM/NOPB.A	Active	Production	NFBGA (NZA) | 49	416 | EIAJ TRAY (10+1)	Yes	SNAGCU	Level-4-260C-72 HR	-40 to 125	SCAN921226 HSM

(1) **Status:** For more details on status, see our product life cycle.

(2) **Material type:** When designated, preproduction parts are prototypes/experimental devices, and are not yet approved or released for full production. Testing and final process, including without limitation quality assurance, reliability performance testing, and/or process qualification, may not yet be complete, and this item is subject to further changes or possible discontinuation. If available for ordering, purchases will be subject to an additional waiver at checkout, and are intended for early internal evaluation purposes only. These items are sold without warranties of any kind.

(3) **RoHS values:** Yes, No, RoHS Exempt. See the TI RoHS Statement for additional information and value definition.

(4) **Lead finish/Ball material:** Parts may have multiple material finish options. Finish options are separated by a vertical ruled line. Lead finish/Ball material values may wrap to two lines if the finish value exceeds the maximum column width.

(5) **MSL rating/Peak reflow:** The moisture sensitivity level ratings and peak solder (reflow) temperatures. In the event that a part has multiple moisture sensitivity ratings, only the lowest level per JEDEC standards is shown. Refer to the shipping label for the actual reflow temperature that will be used to mount the part to the printed circuit board.

(6) **Part marking:** There may be an additional marking, which relates to the logo, the lot trace code information, or the environmental category of the part.

Multiple part markings will be inside parentheses. Only one part marking contained in parentheses and separated by a "~" will appear on a part. If a line is indented then it is a continuation of the previous line and the two combined represent the entire part marking for that device.

Important Information and Disclaimer: The information provided on this page represents TI's knowledge and belief as of the date that it is provided. TI bases its knowledge and belief on information provided by third parties, and makes no representation or warranty as to the accuracy of such information. Efforts are underway to better integrate information from third parties. TI has taken and continues to take reasonable steps to provide representative and accurate information but may not have conducted destructive testing or chemical analysis on incoming materials and chemicals. TI and TI suppliers consider certain information to be proprietary, and thus CAS numbers and other limited information may not be available for release.

In no event shall TI's liability arising out of such information exceed the total purchase price of the TI part(s) at issue in this document sold by TI to Customer on an annual basis.

TAPE AND REEL INFORMATION

REEL DIMENSIONS

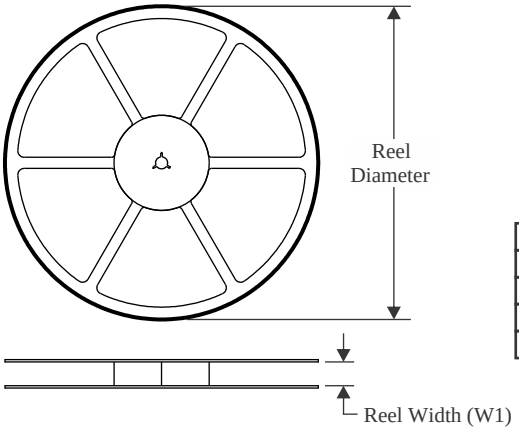

TAPE DIMENSIONS

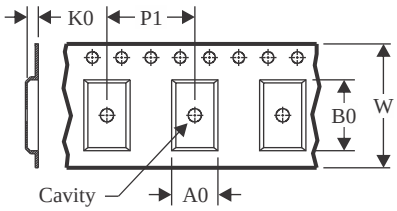

A0	Dimension designed to accommodate the component width
B0	Dimension designed to accommodate the component length
K0	Dimension designed to accommodate the component thickness
W	Overall width of the carrier tape
P1	Pitch between successive cavity centers

QUADRANT ASSIGNMENTS FOR PIN 1 ORIENTATION IN TAPE

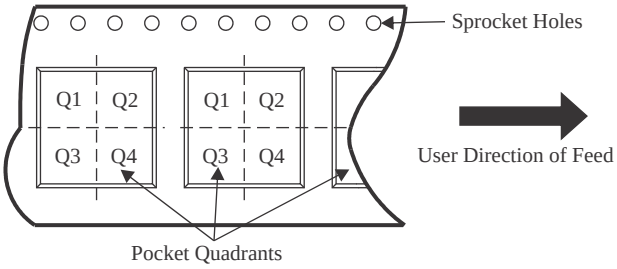

*All dimensions are nominal

Device	Package Type	Package Drawing	Pins	SPQ	Reel Diameter (mm)	Reel Width W1 (mm)	A0 (mm)	B0 (mm)	K0 (mm)	P1 (mm)	W (mm)	Pin1 Quadrant
SCAN921025HSMX/ NOPB	NFBGA	NZA	49	2000	330.0	16.4	7.3	7.3	2.1	12.0	16.0	Q1

TAPE AND REEL BOX DIMENSIONS

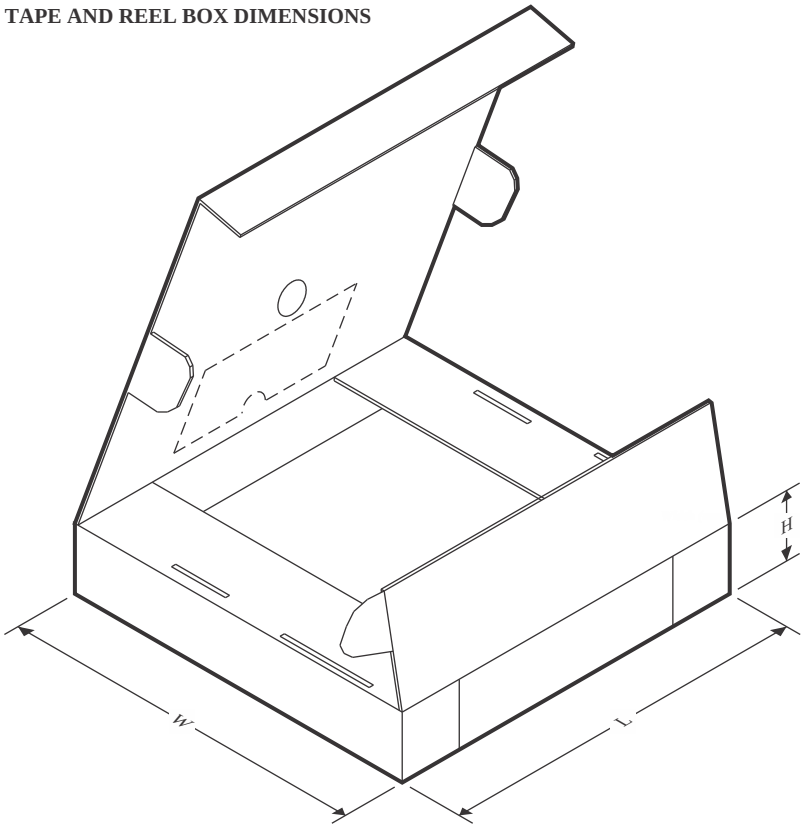

*All dimensions are nominal

Device	Package Type	Package Drawing	Pins	SPQ	Length (mm)	Width (mm)	Height (mm)
SCAN921025HSMX/NOPB	NFBGA	NZA	49	2000	356.0	356.0	36.0

TRAY

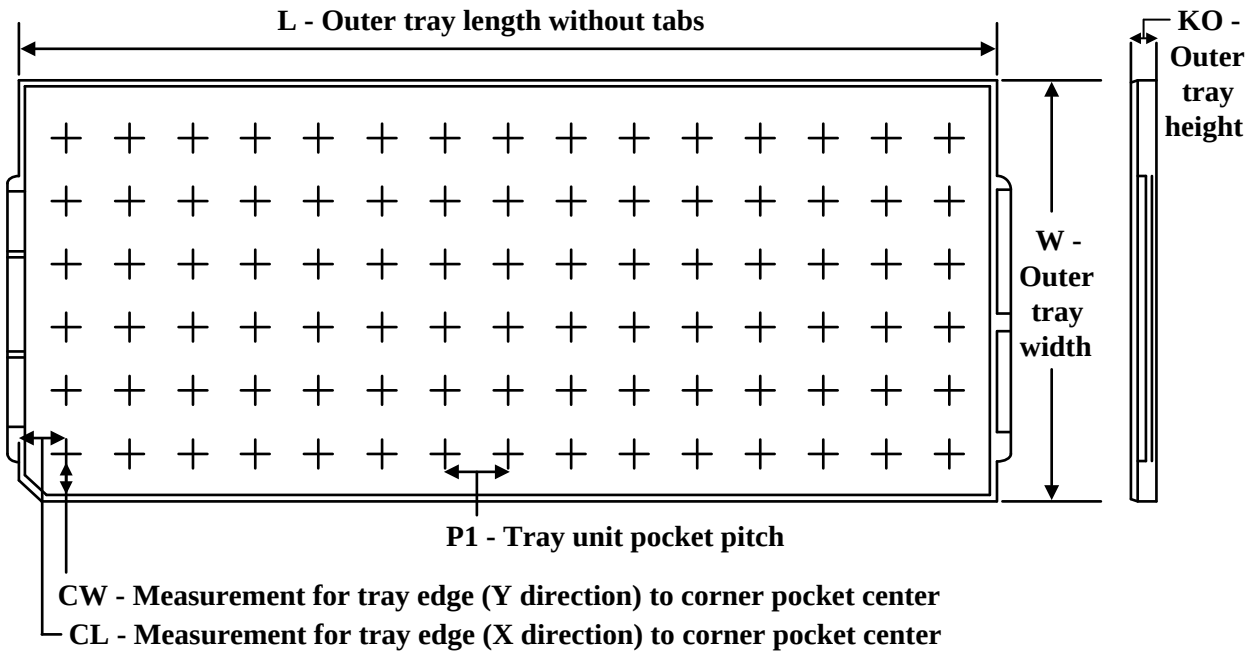

Chamfer on Tray corner indicates Pin 1 orientation of packed units.

*All dimensions are nominal

Device	Package Name	Package Type	Pins	SPQ	Unit array matrix	Max temperature (°C)	L (mm)	W (mm)	K0 (µm)	P1 (mm)	CL (mm)	CW (mm)
SCAN921025HSM	NZA	NFBGA	49	416	13 X 32	150	322.6	135.9	7620	9.4	11.8	11.55
SCAN921025HSM.A	NZA	NFBGA	49	416	13 X 32	150	322.6	135.9	7620	9.4	11.8	11.55
SCAN921025HSM/ NOPB	NZA	NFBGA	49	416	13 X 32	150	322.6	135.9	7620	9.4	11.8	11.55
SCAN921025HSM/ NOPB.A	NZA	NFBGA	49	416	13 X 32	150	322.6	135.9	7620	9.4	11.8	11.55
SCAN921226HSM	NZA	NFBGA	49	416	13 X 32	150	322.6	135.9	7620	9.4	11.8	11.55
SCAN921226HSM.A	NZA	NFBGA	49	416	13 X 32	150	322.6	135.9	7620	9.4	11.8	11.55
SCAN921226HSM/ NOPB	NZA	NFBGA	49	416	13 X 32	150	322.6	135.9	7620	9.4	11.8	11.55
SCAN921226HSM/ NOPB.A	NZA	NFBGA	49	416	13 X 32	150	322.6	135.9	7620	9.4	11.8	11.55

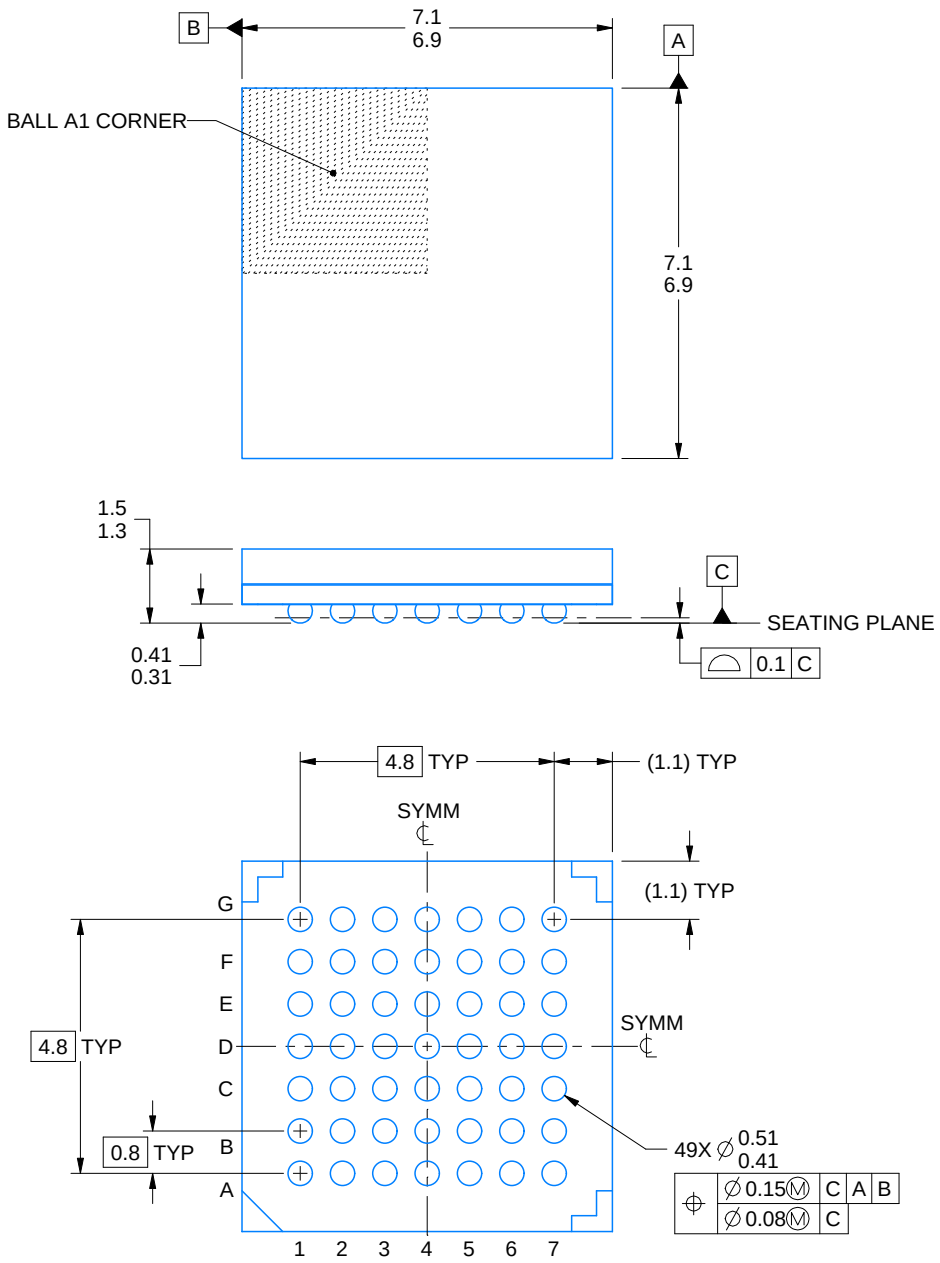

4220034/A 01/2025

NOTES:

1. All linear dimensions are in millimeters. Any dimensions in parenthesis are for reference only. Dimensioning and tolerancing per ASME Y14.5M.
2. This drawing is subject to change without notice.

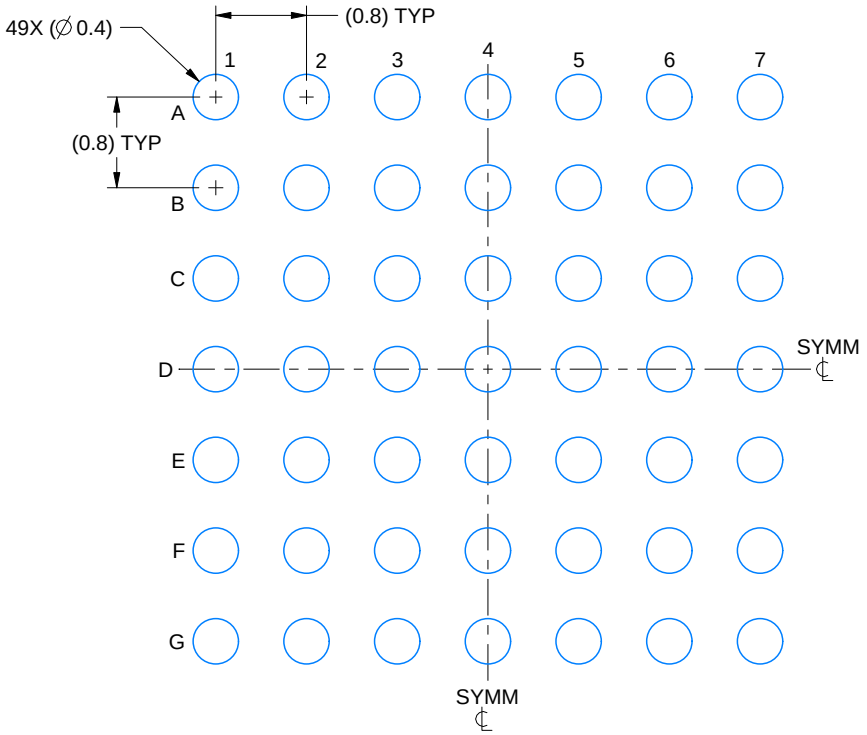

LAND PATTERN EXAMPLE
EXPOSED METAL SHOWN
SCALE: 15X

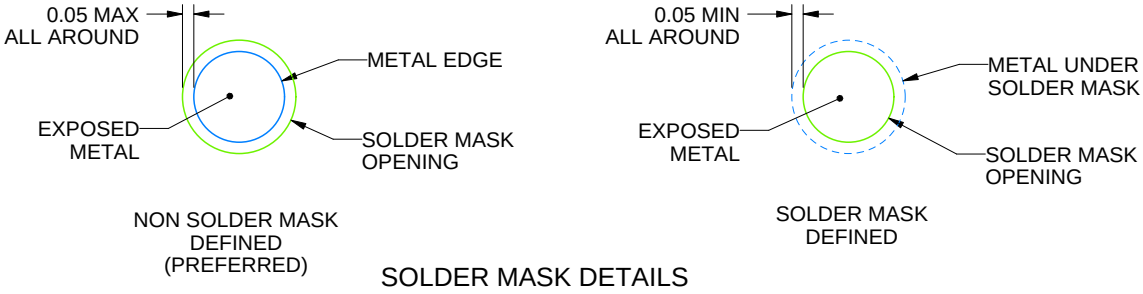

SOLDER MASK DETAILS

4220034/A 01/2025

NOTES: (continued)

3. Final dimensions may vary due to manufacturing tolerance considerations and also routing constraints.
For information, see Texas Instruments literature number SPRAA99 (www.ti.com/lit/spraa99).

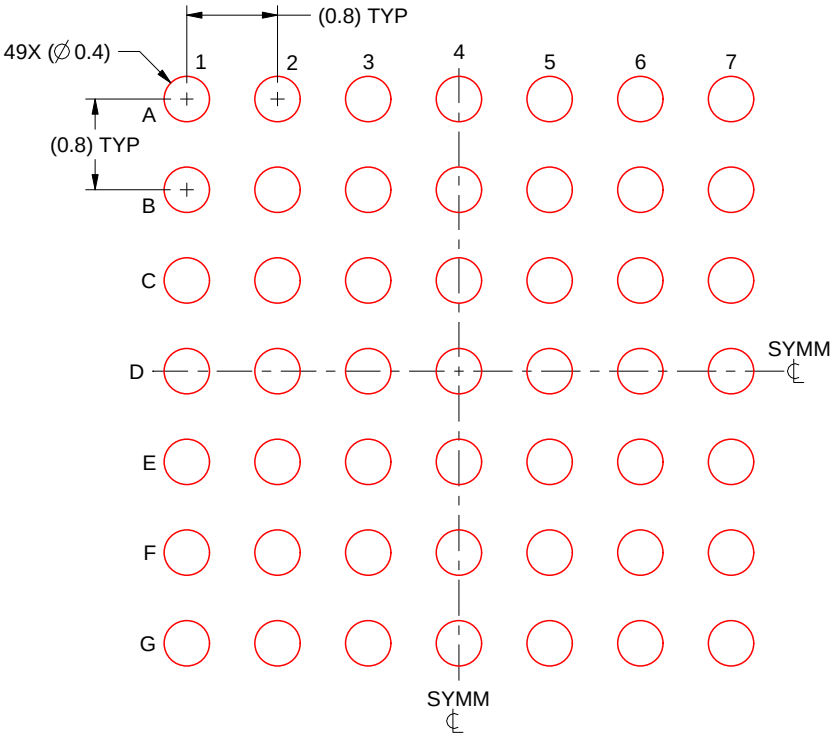

SOLDER PASTE EXAMPLE
BASED ON 0.125 mm THICK STENCIL
SCALE: 15X

4220034/A 01/2025

NOTES: (continued)

4. Laser cutting apertures with trapezoidal walls and rounded corners may offer better paste release.

IMPORTANT NOTICE AND DISCLAIMER

TI PROVIDES TECHNICAL AND RELIABILITY DATA (INCLUDING DATA SHEETS), DESIGN RESOURCES (INCLUDING REFERENCE DESIGNS), APPLICATION OR OTHER DESIGN ADVICE, WEB TOOLS, SAFETY INFORMATION, AND OTHER RESOURCES “AS IS” AND WITH ALL FAULTS, AND DISCLAIMS ALL WARRANTIES, EXPRESS AND IMPLIED, INCLUDING WITHOUT LIMITATION ANY IMPLIED WARRANTIES OF MERCHANTABILITY, FITNESS FOR A PARTICULAR PURPOSE OR NON-INFRINGEMENT OF THIRD PARTY INTELLECTUAL PROPERTY RIGHTS.

These resources are intended for skilled developers designing with TI products. You are solely responsible for (1) selecting the appropriate TI products for your application, (2) designing, validating and testing your application, and (3) ensuring your application meets applicable standards, and any other safety, security, regulatory or other requirements.

These resources are subject to change without notice. TI grants you permission to use these resources only for development of an application that uses the TI products described in the resource. Other reproduction and display of these resources is prohibited. No license is granted to any other TI intellectual property right or to any third party intellectual property right. TI disclaims responsibility for, and you will fully indemnify TI and its representatives against, any claims, damages, costs, losses, and liabilities arising out of your use of these resources.

TI’s products are provided subject to TI’s Terms of Sale or other applicable terms available either on ti.com or provided in conjunction with such TI products. TI’s provision of these resources does not expand or otherwise alter TI’s applicable warranties or warranty disclaimers for TI products.

TI objects to and rejects any additional or different terms you may have proposed.

Mailing Address: Texas Instruments, Post Office Box 655303, Dallas, Texas 75265
Copyright © 2025, Texas Instruments Incorporated