- **Choice of Eight Latches or Eight D-Type Flip-Flops in a Single Package**
- **3-State Bus-Driving Outputs**
- **Full Parallel Access for Loading**
- **Buffered Control Inputs**
- **Clock-Enable Input Has Hysteresis to Improve Noise Rejection (’S373 and ’S374)**
- **P-N-P Inputs Reduce DC Loading on Data Lines (’S373 and ’S374)**

SN54LS373, SN54LS374, SN54S373, SN54S374 . . . J OR W PACKAGE
SN74LS373, SN74S374 . . . DW, N, OR NS PACKAGE
SN74LS374 . . . DB, DW, N, OR NS PACKAGE
SN74S373 . . . DW OR N PACKAGE
(TOP VIEW)

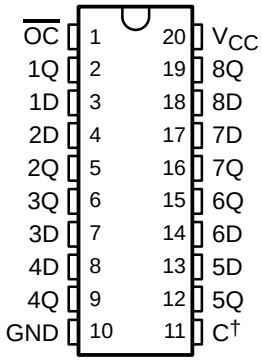

† C for ’LS373 and ’S373; CLK for ’LS374 and ’S374.

SN54LS373, SN54LS374, SN54S373, SN54S374 . . . FK PACKAGE
(TOP VIEW)

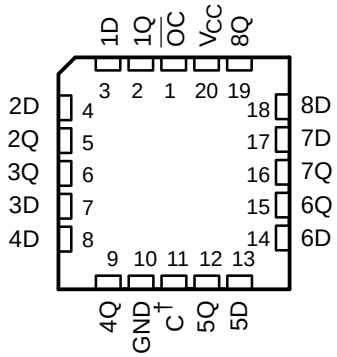

† C for ’LS373 and ’S373; CLK for ’LS374 and ’S374.

description

These 8-bit registers feature 3-state outputs designed specifically for driving highly capacitive or relatively low-impedance loads. The high-impedance 3-state and increased high-logic-level drive provide these registers with the capability of being connected directly to and driving the bus lines in a bus-organized system without need for interface or pullup components. These devices are particularly attractive for implementing buffer registers, I/O ports, bidirectional bus drivers, and working registers.

The eight latches of the ’LS373 and ’S373 are transparent D-type latches, meaning that while the enable (C or CLK) input is high, the Q outputs follow the data (D) inputs. When C or CLK is taken low, the output is latched at the level of the data that was set up.

The eight flip-flops of the ’LS374 and ’S374 are edge-triggered D-type flip-flops. On the positive transition of the clock, the Q outputs are set to the logic states that were set up at the D inputs.

Schmitt-trigger buffered inputs at the enable/clock lines of the ’S373 and ’S374 devices simplify system design as ac and dc noise rejection is improved by typically 400 mV due to the input hysteresis. A buffered output-control ($\overline{OC}$) input can be used to place the eight outputs in either a normal logic state (high or low logic levels) or the high-impedance state. In the high-impedance state, the outputs neither load nor drive the bus lines significantly.

$\overline{OC}$ does not affect the internal operation of the latches or flip-flops. That is, the old data can be retained or new data can be entered, even while the outputs are off.

Please be aware that an important notice concerning availability, standard warranty, and use in critical applications of Texas Instruments semiconductor products and disclaimers thereto appears at the end of this data sheet.

PRODUCTION DATA information is current as of publication date. Products conform to specifications per the terms of Texas Instruments standard warranty. Production processing does not necessarily include testing of all parameters.

Copyright © 2002, Texas Instruments Incorporated

On products compliant to MIL-PRF-38535, all parameters are tested unless otherwise noted. On all other products, production processing does not necessarily include testing of all parameters.

ORDERING INFORMATION

T_A	PACKAGE†		ORDERABLE PART NUMBER	TOP-SIDE MARKING
0°C to 70°C	PDIP – N	Tube	SN74LS373N	SN74LS373N
		Tube	SN74LS374N	SN74LS374N
		Tube	SN74S373N	SN74S373N
		Tube	SN74S374N	SN74S374N
	SOIC – DW	Tube	SN74LS373DW	LS373
		Tape and reel	SN74LS373DWR	
		Tube	SN74LS374DW	LS374
		Tape and reel	SN74LS374DWR	
		Tube	SN74S373DW	S373
		Tape and reel	SN74S373DWR	
		Tube	SN74S374DW	S374
		Tape and reel	SN74S374DWR	
	SOP – NS	Tape and reel	SN74LS373NSR	74LS373
		Tape and reel	SN74LS374NSR	74LS374
		Tape and reel	SN74S374NSR	74S374
	SSOP – DB	Tape and reel	SN74LS374DBR	LS374A
–55°C to 125°C	CDIP – J	Tube	SN54LS373J	SN54LS373J
		Tube	SNJ54LS373J	SNJ54LS373J
		Tube	SN54LS374J	SN54LS374J
		Tube	SNJ54LS374J	SNJ54LS374J
		Tube	SN54S373J	SN54S373J
		Tube	SNJ54S373J	SNJ54S373J
		Tube	SN54S374J	SN54S374J
		Tube	SNJ54S374J	SNJ54S374J
	CFP – W	Tube	SNJ54LS373W	SNJ54LS373W
		Tube	SNJ54LS374W	SNJ54LS374W
		Tube	SNJ54S374W	SNJ54S374W
	LCCC – FK	Tube	SNJ54LS373FK	SNJ54LS373FK
		Tube	SNJ54LS374FK	SNJ54LS374FK
		Tube	SNJ54S373FK	SNJ54S373FK
		Tube	SNJ54S374FK	SNJ54S374FK

† Package drawings, standard packing quantities, thermal data, symbolization, and PCB design guidelines are available at www.ti.com/sc/package.

Function Tables

'LS373, 'S373
(each latch)

INPUTS			OUTPUT
$\overline{OC}$	C	D	Q
L	H	H	H
L	H	L	L
L	L	X	Q_0
H	X	X	Z

'LS374, 'S374
(each latch)

INPUTS			OUTPUT
$\overline{OC}$	CLK	D	Q
L	↑	H	H
L	↑	L	L
L	L	X	Q_0
H	X	X	Z

logic diagrams (positive logic)

'LS373, 'S373
Transparent Latches

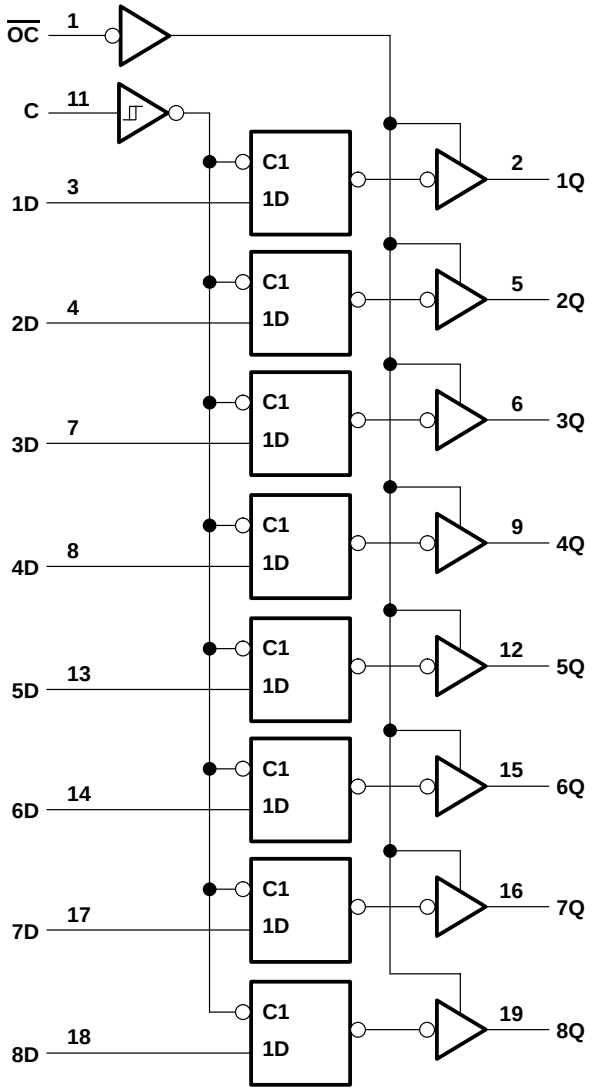

⎍ for 'S373 Only

'LS374, 'S374
Positive-Edge-Triggered Flip-Flops

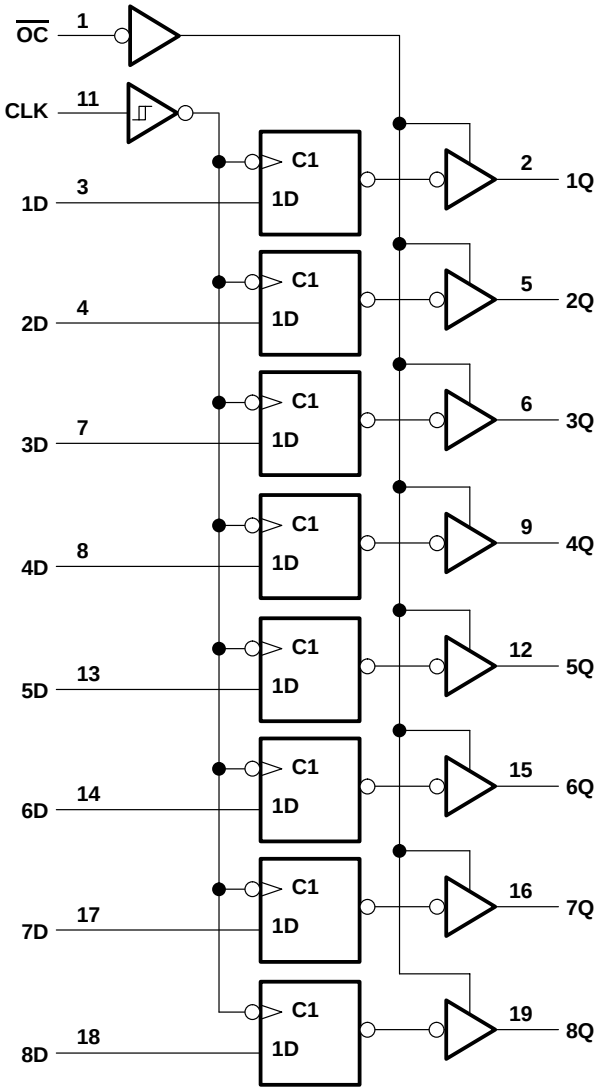

⎍ for 'S374 Only

Pin numbers shown are for DB, DW, J, N, NS, and W packages.

schematic of inputs and outputs

’LS373

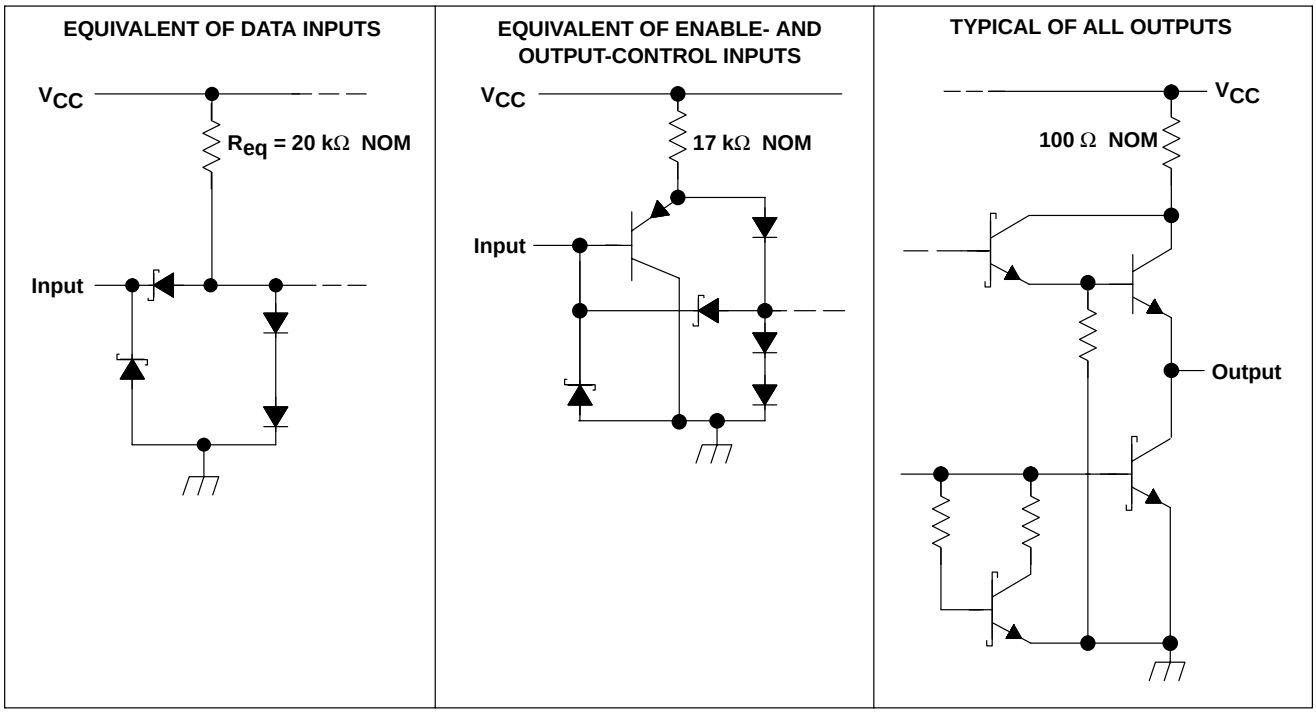

’LS374

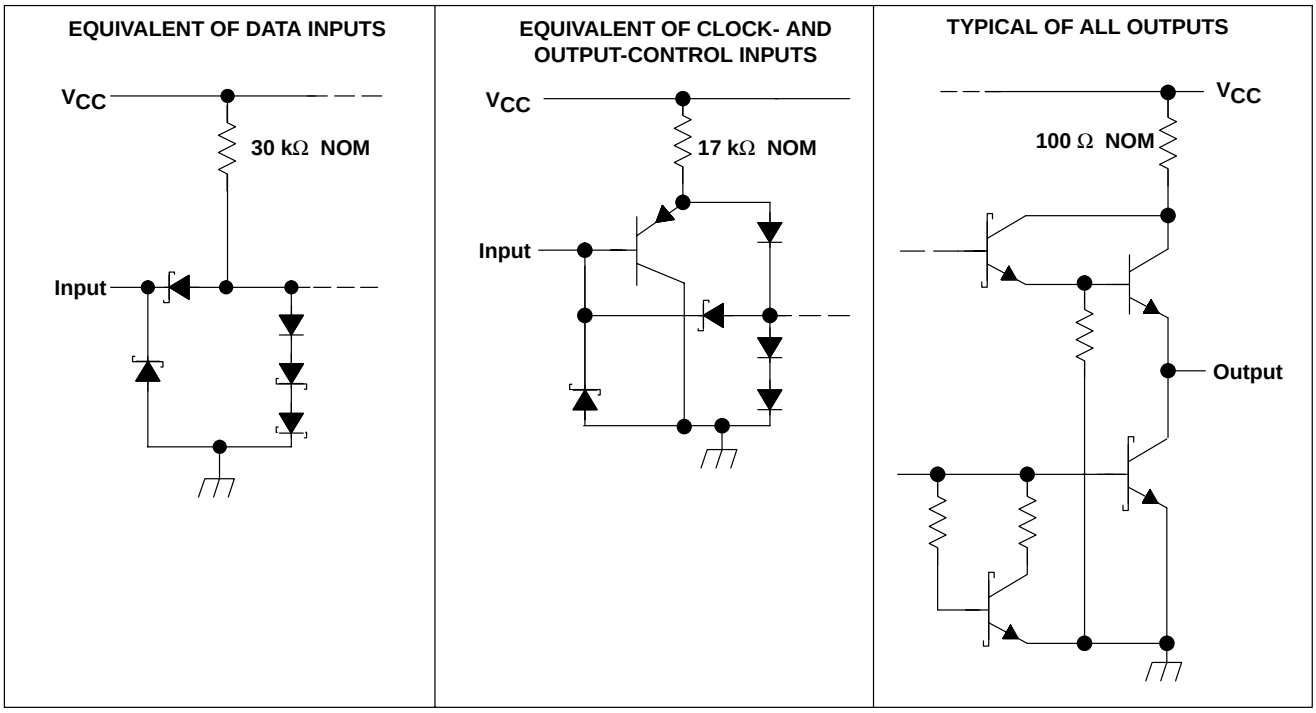

absolute maximum ratings over operating free-air temperature range (unless otherwise noted)† ('LS devices)

Supply voltage, V_{CC} (see Note 1) . . . . . 7 V
Input voltage, V_I . . . . . 7 V
Off-state output voltage . . . . . 5.5 V
Package thermal impedance, θ_{JA} (see Note 2): DB package . . . . . 70°C/W
DW package . . . . . 58°C/W
N package . . . . . 69°C/W
NS package . . . . . 60°C/W
Storage temperature range, T_{stg} . . . . . –65°C to 150°C

† Stresses beyond those listed under "absolute maximum ratings" may cause permanent damage to the device. These are stress ratings only, and functional operation of the device at these or any other conditions beyond those indicated under "recommended operating conditions" is not implied. Exposure to absolute-maximum-rated conditions for extended periods may affect device reliability.

NOTES: 1. Voltage values are with respect to network ground terminal.
2. The package thermal impedance is calculated in accordance with JESD 51-7.

recommended operating conditions

			SN54LS'			SN74LS'			UNIT
			MIN	NOM	MAX	MIN	NOM	MAX	
V_{CC}	Supply voltage		4.5	5	5	4.75	5	5.25	V
V_{OH}	High-level output voltage				5.5			5.5	V
I_{OH}	High-level output current				–1			–2.6	mA
I_{OL}	Low-level output current				12			24	mA
t_w	Pulse duration	CLK high	15			15			ns
		CLK low	15			15			
t_{su}	Data setup time	'LS373	5↓			5↓			ns
		'LS374	20↑			20↑			
t_h	Data hold time	'LS373	20↓			20↓			ns
		'LS374‡	5↑			0↑			
T_A	Operating free-air temperature		–55		125	0		70	°C

‡ The t_h specification applies only for data frequency below 10 MHz. Designs above 10 MHz should use a minimum of 5 ns (commercial only).

electrical characteristics over recommended operating free-air temperature range (unless otherwise noted)

PARAMETER		TEST CONDITIONS†			SN54LS'			SN74LS'			UNIT
					MIN	TYP‡	MAX	MIN	TYP‡	MAX	
V_{IH}	High-level input voltage				2			2			V
V_{IL}	Low-level input voltage						0.7			0.8	V
V_{IK}	Input clamp voltage	V_{CC} = MIN,	I_I = –18 mA				–1.5			–1.5	V
V_{OH}	High-level output voltage	V_{CC} = MIN, V_{IL} = V_{IL} max,	V_{IH} = 2 V, I_{OH} = MAX		2.4	3.4		2.4	3.1		V
V_{OL}	Low-level output voltage	V_{CC} = MIN, V_{IL} = V_{IL} max	V_{IH} = 2 V,	I_{OL} = 12 mA		0.25	0.4		0.25	0.4	V
				I_{OL} = 24 mA					0.35	0.5	
I_{OZH}	Off-state output current, high-level voltage applied	V_{CC} = MAX, V_O = 2.7 V	V_{IH} = 2 V,				20			20	μA
I_{OZL}	Off-state output current, low-level voltage applied	V_{CC} = MAX, V_O = 0.4 V	V_{IH} = 2 V,				–20			–20	μA
I_I	Input current at maximum input voltage	V_{CC} = MAX,	V_I = 7 V				0.1			0.1	mA
I_{IH}	High-level input current	V_{CC} = MAX,	V_I = 2.7 V				20			20	μA
I_{IL}	Low-level input current	V_{CC} = MAX,	V_I = 0.4 V				–0.4			–0.4	mA
I_{OS}	Short-circuit output current§	V_{CC} = MAX			–30		–130	–30		–130	mA
I_{CC}	Supply current	V_{CC} = MAX, Output control at 4.5 V		'LS373		24	40		24	40	mA
				'LS374		27	40		27	40	

† For conditions shown as MIN or MAX, use the appropriate value specified under recommended operating conditions.
‡ All typical values are at V_{CC} = 5 V, T_A = 25°C.
§ Not more than one output should be shorted at a time and duration of the short circuit should not exceed one second.

switching characteristics, V_{CC} = 5 V, T_A = 25°C (see Figure 1)

PARAMETER	FROM (INPUT)	TO (OUTPUT)	TEST CONDITIONS	'LS373			'LS374			UNIT
				MIN	TYP	MAX	MIN	TYP	MAX	
f_{max}			R_L = 667 Ω, C_L = 45 pF, See Note 3				35	50		MHz
t_{PLH}	Data	Any Q	R_L = 667 Ω, C_L = 45 pF, See Note 3		12	18				ns
t_{PHL}					12	18				
t_{PLH}	C or CLK	Any Q	R_L = 667 Ω, C_L = 45 pF, See Note 3		20	30		15	28	ns
t_{PHL}					18	30		19	28	
t_{PZH}	$\overline{OC}$	Any Q	R_L = 667 Ω, C_L = 45 pF, See Note 3		15	28		20	26	ns
t_{PZL}					25	36		21	28	
t_{PHZ}	$\overline{OC}$	Any Q	R_L = 667 Ω, C_L = 5 pF		15	25		15	28	ns
t_{PLZ}					12	20		12	20	

NOTE 3: Maximum clock frequency is tested with all outputs loaded.
f_{max} = maximum clock frequency
t_{PLH} = propagation delay time, low-to-high-level output
t_{PHL} = propagation delay time, high-to-low-level output
t_{PZH} = output enable time to high level
t_{PZL} = output enable time to low level
t_{PHZ} = output disable time from high level
t_{PLZ} = output disable time from low level

schematic of inputs and outputs

’S373 and ’S374	’S373 and ’S374
EQUIVALENT OF EACH INPUT	TYPICAL OF ALL OUTPUTS

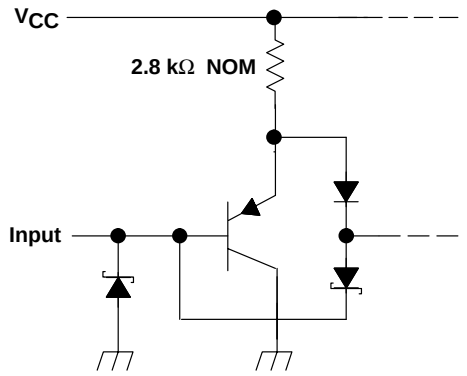

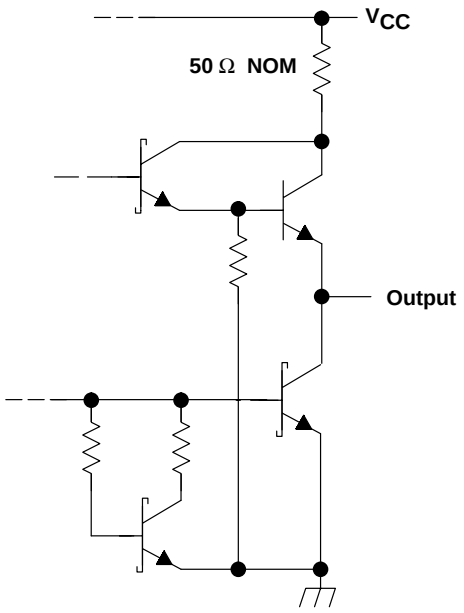

absolute maximum ratings over operating free-air temperature range (unless otherwise noted)† ('S devices)

Supply voltage, V_{CC} (see Note 1) . . . . . 7 V
Input voltage, V_I . . . . . 5.5 V
Off-state output voltage . . . . . 5.5 V
Package thermal impedance, θ_{JA} (see Note 2): DW package . . . . . 58°C/W
N package . . . . . 69°C/W
NS package . . . . . 60°C/W
Storage temperature range, T_{stg} . . . . . –65°C to 150°C

† Stresses beyond those listed under "absolute maximum ratings" may cause permanent damage to the device. These are stress ratings only, and functional operation of the device at these or any other conditions beyond those indicated under "recommended operating conditions" is not implied. Exposure to absolute-maximum-rated conditions for extended periods may affect device reliability.

NOTES: 1. Voltage values are with respect to network ground terminal.
2. The package thermal impedance is calculated in accordance with JESD 51-7.

recommended operating conditions

			SN54S'			SN74S'			UNIT
			MIN	NOM	MAX	MIN	NOM	MAX	
V_{CC}	Supply voltage		4.5	5	5.5	4.75	5	5.25	V
V_{OH}	High-level output voltage				5.5			5.5	V
I_{OH}	High-level output current				–2			–6.5	mA
t_w	Pulse duration, clock/enable	High	6			6			ns
		Low	7.3			7.3			
t_{su}	Data setup time	'S373	0↓			0↓			ns
		'S374	5↑			5↑			
t_h	Data hold time	'S373	10↓			10↓			ns
		'S374	2↑			2↑			
T_A	Operating free-air temperature		–55		125	0		70	°C

electrical characteristics over recommended operating free-air temperature range (unless otherwise noted) (SN54S373, SN54S374, SN74S373, SN74S374)

PARAMETER		TEST CONDITIONS†				MIN	TYP‡	MAX	UNIT
V_{IH}						2			V
V_{IL}								0.8	V
V_{IK}		V_{CC} = MIN,	I_I = –18 mA					–1.2	V
V_{OH}	SN54S'	V_{CC} = MIN,	V_{IH} = 2 V,	V_{IL} = 0.8 V,	I_{OH} = MAX	2.4	3.4		V
	SN74S'					2.4	3.1		
V_{OL}		V_{CC} = MIN,	V_{IH} = 2 V,	V_{IL} = 0.8 V,	I_{OL} = 20 mA			0.5	V
I_{OZH}		V_{CC} = MAX,	V_{IH} = 2 V,	V_O = 2.4 V				50	μA
I_{OZL}		V_{CC} = MAX,	V_{IH} = 2 V,	V_O = 0.5 V				–50	μA
I_I		V_{CC} = MAX,	V_I = 5.5 V					1	mA
I_{IH}		V_{CC} = MAX,	V_I = 2.7 V					50	μA
I_{IL}		V_{CC} = MAX,	V_I = 0.5 V					–250	μA
I_{OS}§		V_{CC} = MAX				–40		–100	mA
I_{CC}		V_{CC} = MAX	'S373	Outputs high				160	mA
				Outputs low				160	
				Outputs disabled				190	
			'S374	Outputs high				110	
				Outputs low				140	
				Outputs disabled				160	
				CLK and $\overline{OC}$ at 4 V, D inputs at 0 V				180	

† For conditions shown as MIN or MAX, use the appropriate value specified under recommended operating conditions.
‡ All typical values are at V_{CC}= 5 V, T_A = 25°C.
§ Not more than one output should be shorted at a time and duration of the short circuit should not exceed one second.

switching characteristics, V_{CC} = 5 V, T_A = 25°C (see Figure 2)

PARAMETER	FROM (INPUT)	TO (OUTPUT)	TEST CONDITIONS	'S373			'S374			UNIT
				MIN	TYP	MAX	MIN	TYP	MAX	
f_{max}			R_L = 280 Ω, C_L = 15 pF, See Note 3				75	100		MHz
t_{PLH}	Data	Any Q	R_L = 280 Ω, C_L = 15 pF, See Note 3		7	12				ns
t_{PHL}					7	12				
t_{PLH}	C or CLK	Any Q	R_L = 280 Ω, C_L = 15 pF, See Note 3		7	14		8	15	ns
t_{PHL}					12	18		11	17	
t_{PZH}	$\overline{OC}$	Any Q	R_L = 280 Ω, C_L = 15 pF, See Note 3		8	15		8	15	ns
t_{PZL}					11	18		11	18	
t_{PHZ}	$\overline{OC}$	Any Q	R_L = 280 Ω, C_L = 5 pF		6	9		5	9	ns
t_{PLZ}					8	12		7	12	

NOTE 3. Maximum clock frequency is tested with all outputs loaded.
f_{max} = maximum clock frequency
t_{PLH} = propagation delay time, low-to-high-level output
t_{PHL} = propagation delay time, high-to-low-level output
t_{PZH} = output enable time to high level
t_{PZL} = output enable time to low level
t_{PHZ} = output disable time from high level
t_{PLZ} = output disable time from low level

PARAMETER MEASUREMENT INFORMATION
SERIES 54LS/74LS DEVICES

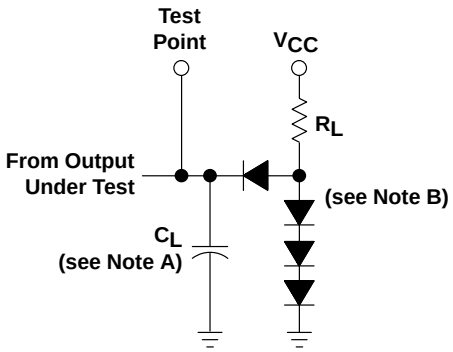

LOAD CIRCUIT
FOR 2-STATE TOTEM-POLE OUTPUTS

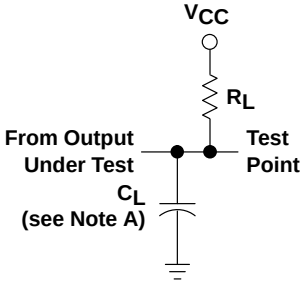

LOAD CIRCUIT
FOR OPEN-COLLECTOR OUTPUTS

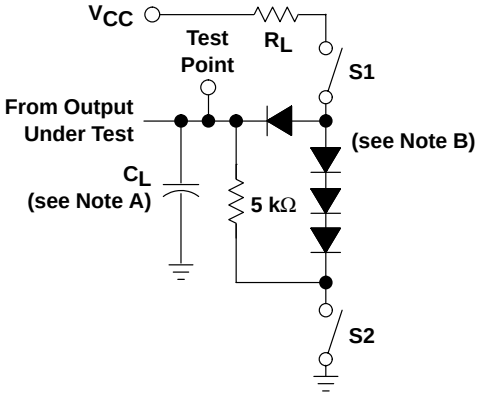

LOAD CIRCUIT
FOR 3-STATE OUTPUTS

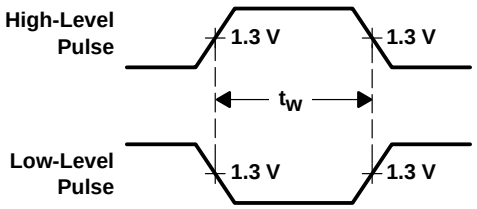

VOLTAGE WAVEFORMS
PULSE DURATIONS

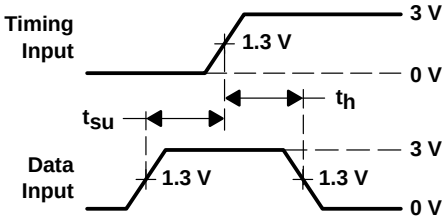

VOLTAGE WAVEFORMS
SETUP AND HOLD TIMES

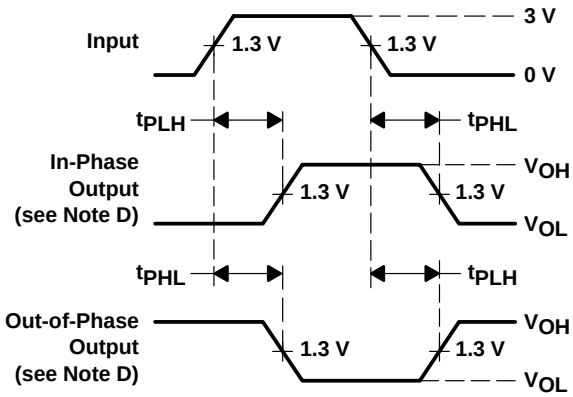

VOLTAGE WAVEFORMS
PROPAGATION DELAY TIMES

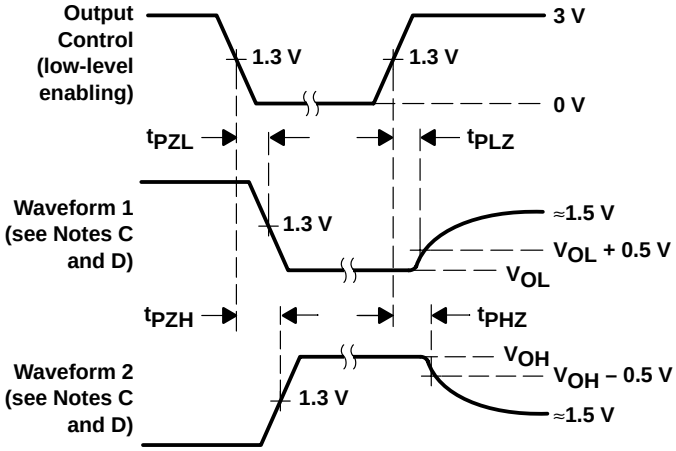

VOLTAGE WAVEFORMS
ENABLE AND DISABLE TIMES, 3-STATE OUTPUTS

NOTES:
A. C_L includes probe and jig capacitance.
B. All diodes are 1N3064 or equivalent.
C. Waveform 1 is for an output with internal conditions such that the output is low except when disabled by the output control. Waveform 2 is for an output with internal conditions such that the output is high except when disabled by the output control.
D. S1 and S2 are closed for t_{PLH}, t_{PHL}, t_{PHZ}, and t_{PLZ}; S1 is open and S2 is closed for t_{PZH}; S1 is closed and S2 is open for t_{PZL}.
E. Phase relationships between inputs and outputs have been chosen arbitrarily for these examples.
F. All input pulses are supplied by generators having the following characteristics: PRR ≤ 1 MHz, $Z_O \approx 50\ \Omega$, $t_r \leq 1.5$ ns, $t_f \leq 2.6$ ns.
G. The outputs are measured one at a time with one input transition per measurement.
H. All parameters and waveforms are not applicable to all devices .

Figure 1. Load Circuits and Voltage Waveforms

PARAMETER MEASUREMENT INFORMATION
SERIES 54S/74S DEVICES

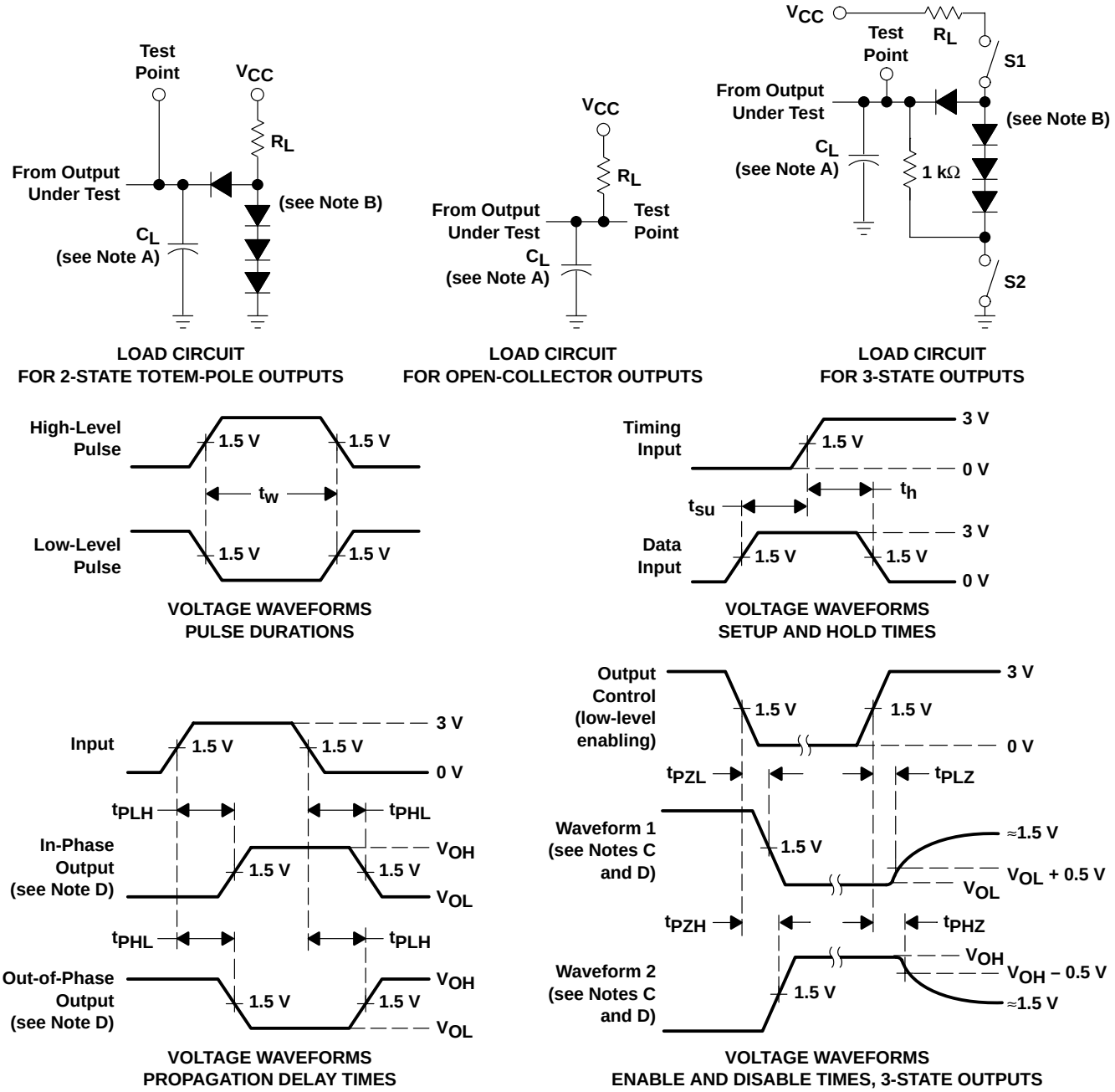

NOTES:
A. C_L includes probe and jig capacitance.
B. All diodes are 1N3064 or equivalent.
C. Waveform 1 is for an output with internal conditions such that the output is low except when disabled by the output control. Waveform 2 is for an output with internal conditions such that the output is high except when disabled by the output control.
D. S1 and S2 are closed for t_{PLH}, t_{PHL}, t_{PHZ}, and t_{PLZ}; S1 is open and S2 is closed for t_{PZH}; S1 is closed and S2 is open for t_{PZL}.
E. All input pulses are supplied by generators having the following characteristics: PRR ≤ 1 MHz, $Z_O \approx 50\ \Omega$; t_r and $t_f \leq 7$ ns for Series 54/74 devices and t_r and $t_f \leq 2.5$ ns for Series 54S/74S devices.
F. The outputs are measured one at a time with one input transition per measurement.
G. All parameters and waveforms are not applicable to all devices .

Figure 2. Load Circuits and Voltage Waveforms

TYPICAL APPLICATION DATA

Bidirectional Bus Driver

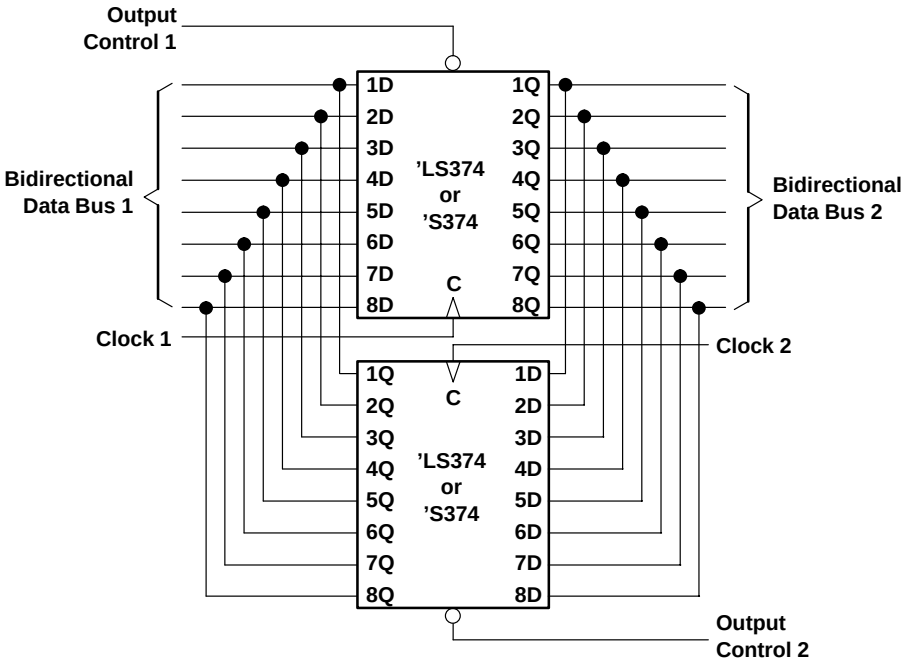

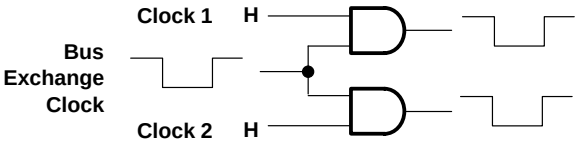

Clock Circuit for Bus Exchange

Expandable 4-Word by 8-Bit General Register File

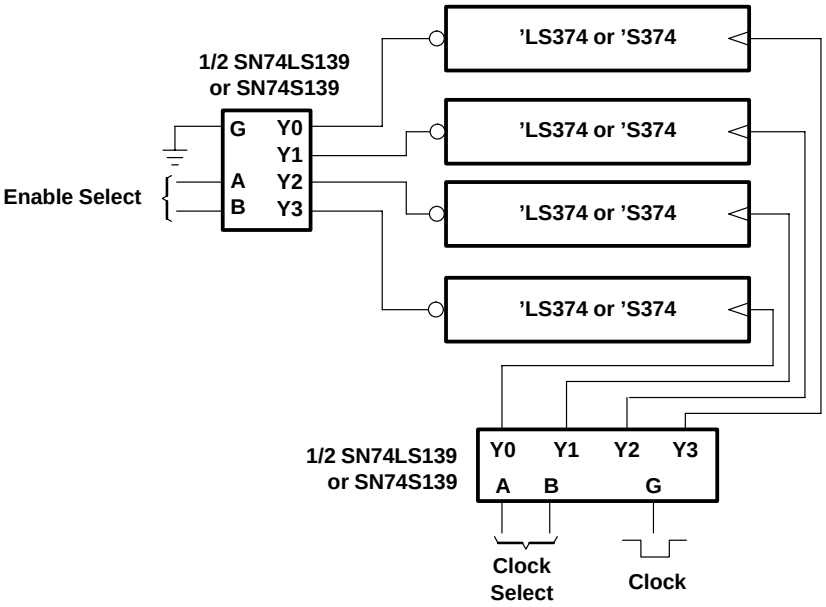

PACKAGING INFORMATION

Orderable part number	Status (1)	Material type (2)	Package | Pins	Package qty | Carrier	RoHS (3)	Lead finish/ Ball material (4)	MSL rating/ Peak reflow (5)	Op temp (°C)	Part marking (6)
78011022A	Active	Production	LCCC (FK) | 20	55 | TUBE	No	SNPB	N/A for Pkg Type	-55 to 125	78011022A SNJ54LS 374FK
7801102RA	Active	Production	CDIP (J) | 20	20 | TUBE	No	SNPB	N/A for Pkg Type	-55 to 125	7801102RA SNJ54LS374J
7801102SA	Active	Production	CFP (W) | 20	25 | TUBE	No	SNPB	N/A for Pkg Type	-55 to 125	7801102SA SNJ54LS374W
JM38510/32502B2A	Active	Production	LCCC (FK) | 20	55 | TUBE	No	SNPB	N/A for Pkg Type	-55 to 125	JM38510/ 32502B2A
JM38510/32502B2A.A	Active	Production	LCCC (FK) | 20	55 | TUBE	No	SNPB	N/A for Pkg Type	-55 to 125	JM38510/ 32502B2A
JM38510/32502BRA	Active	Production	CDIP (J) | 20	20 | TUBE	No	SNPB	N/A for Pkg Type	-55 to 125	JM38510/ 32502BRA
JM38510/32502BRA.A	Active	Production	CDIP (J) | 20	20 | TUBE	No	SNPB	N/A for Pkg Type	-55 to 125	JM38510/ 32502BRA
JM38510/32502BSA	Active	Production	CFP (W) | 20	25 | TUBE	No	SNPB	N/A for Pkg Type	-55 to 125	JM38510/ 32502BSA
JM38510/32502BSA.A	Active	Production	CFP (W) | 20	25 | TUBE	No	SNPB	N/A for Pkg Type	-55 to 125	JM38510/ 32502BSA
JM38510/32502SRA	Active	Production	CDIP (J) | 20	20 | TUBE	No	SNPB	N/A for Pkg Type	-55 to 125	JM38510/ 32502SRA
JM38510/32502SRA.A	Active	Production	CDIP (J) | 20	20 | TUBE	No	SNPB	N/A for Pkg Type	-55 to 125	JM38510/ 32502SRA
JM38510/32502SSA	Active	Production	CFP (W) | 20	25 | TUBE	No	SNPB	N/A for Pkg Type	-55 to 125	JM38510/ 32502SSA
JM38510/32502SSA.A	Active	Production	CFP (W) | 20	25 | TUBE	No	SNPB	N/A for Pkg Type	-55 to 125	JM38510/ 32502SSA
JM38510/32503B2A	Active	Production	LCCC (FK) | 20	55 | TUBE	No	SNPB	N/A for Pkg Type	-55 to 125	JM38510/ 32503B2A
JM38510/32503B2A.A	Active	Production	LCCC (FK) | 20	55 | TUBE	No	SNPB	N/A for Pkg Type	-55 to 125	JM38510/ 32503B2A
JM38510/32503BRA	Active	Production	CDIP (J) | 20	20 | TUBE	No	SNPB	N/A for Pkg Type	-55 to 125	JM38510/ 32503BRA

Orderable part number	Status (1)	Material type (2)	Package | Pins	Package qty | Carrier	RoHS (3)	Lead finish/ Ball material (4)	MSL rating/ Peak reflow (5)	Op temp (°C)	Part marking (6)
JM38510/32503BRA.A	Active	Production	CDIP (J) | 20	20 | TUBE	No	SNPB	N/A for Pkg Type	-55 to 125	JM38510/ 32503BRA
JM38510/32503BSA	Active	Production	CFP (W) | 20	25 | TUBE	No	SNPB	N/A for Pkg Type	-55 to 125	JM38510/ 32503BSA
JM38510/32503BSA.A	Active	Production	CFP (W) | 20	25 | TUBE	No	SNPB	N/A for Pkg Type	-55 to 125	JM38510/ 32503BSA
M38510/32502B2A	Active	Production	LCCC (FK) | 20	55 | TUBE	No	SNPB	N/A for Pkg Type	-55 to 125	JM38510/ 32502B2A
M38510/32502BRA	Active	Production	CDIP (J) | 20	20 | TUBE	No	SNPB	N/A for Pkg Type	-55 to 125	JM38510/ 32502BRA
M38510/32502BSA	Active	Production	CFP (W) | 20	25 | TUBE	No	SNPB	N/A for Pkg Type	-55 to 125	JM38510/ 32502BSA
M38510/32502SRA	Active	Production	CDIP (J) | 20	20 | TUBE	No	SNPB	N/A for Pkg Type	-55 to 125	JM38510/ 32502SRA
M38510/32502SSA	Active	Production	CFP (W) | 20	25 | TUBE	No	SNPB	N/A for Pkg Type	-55 to 125	JM38510/ 32502SSA
M38510/32503B2A	Active	Production	LCCC (FK) | 20	55 | TUBE	No	SNPB	N/A for Pkg Type	-55 to 125	JM38510/ 32503B2A
M38510/32503BRA	Active	Production	CDIP (J) | 20	20 | TUBE	No	SNPB	N/A for Pkg Type	-55 to 125	JM38510/ 32503BRA
M38510/32503BSA	Active	Production	CFP (W) | 20	25 | TUBE	No	SNPB	N/A for Pkg Type	-55 to 125	JM38510/ 32503BSA
SN54LS373J	Active	Production	CDIP (J) | 20	20 | TUBE	No	SNPB	N/A for Pkg Type	-55 to 125	SN54LS373J
SN54LS373J.A	Active	Production	CDIP (J) | 20	20 | TUBE	No	SNPB	N/A for Pkg Type	-55 to 125	SN54LS373J
SN54LS374J	Active	Production	CDIP (J) | 20	20 | TUBE	No	SNPB	N/A for Pkg Type	-55 to 125	SN54LS374J
SN54LS374J.A	Active	Production	CDIP (J) | 20	20 | TUBE	No	SNPB	N/A for Pkg Type	-55 to 125	SN54LS374J
SN54S373J	Active	Production	CDIP (J) | 20	20 | TUBE	No	SNPB	N/A for Pkg Type	-55 to 125	SN54S373J
SN54S373J.A	Active	Production	CDIP (J) | 20	20 | TUBE	No	SNPB	N/A for Pkg Type	-55 to 125	SN54S373J
SN54S374J	Active	Production	CDIP (J) | 20	20 | TUBE	No	SNPB	N/A for Pkg Type	-55 to 125	SN54S374J
SN54S374J.A	Active	Production	CDIP (J) | 20	20 | TUBE	No	SNPB	N/A for Pkg Type	-55 to 125	SN54S374J
SN74LS373DW	Obsolete	Production	SOIC (DW) | 20	-	-	Call TI	Call TI	0 to 70	LS373
SN74LS373DWR	Active	Production	SOIC (DW) | 20	2000 | LARGE T&R	Yes	NIPDAU	Level-1-260C-UNLIM	0 to 70	LS373
SN74LS373DWR.A	Active	Production	SOIC (DW) | 20	2000 | LARGE T&R	Yes	NIPDAU	Level-1-260C-UNLIM	0 to 70	LS373
SN74LS373N	Active	Production	PDIP (N) | 20	20 | TUBE	Yes	NIPDAU	N/A for Pkg Type	0 to 70	SN74LS373N

Orderable part number	Status (1)	Material type (2)	Package | Pins	Package qty | Carrier	RoHS (3)	Lead finish/ Ball material (4)	MSL rating/ Peak reflow (5)	Op temp (°C)	Part marking (6)
SN74LS373N.A	Active	Production	PDIP (N) | 20	20 | TUBE	Yes	NIPDAU	N/A for Pkg Type	0 to 70	SN74LS373N
SN74LS373NE4	Active	Production	PDIP (N) | 20	20 | TUBE	Yes	NIPDAU	N/A for Pkg Type	0 to 70	SN74LS373N
SN74LS373NSR	Active	Production	SOP (NS) | 20	2000 | LARGE T&R	Yes	NIPDAU	Level-1-260C-UNLIM	0 to 70	74LS373
SN74LS373NSR.A	Active	Production	SOP (NS) | 20	2000 | LARGE T&R	Yes	NIPDAU	Level-1-260C-UNLIM	0 to 70	74LS373
SN74LS374DBR	Active	Production	SSOP (DB) | 20	2000 | LARGE T&R	Yes	NIPDAU	Level-1-260C-UNLIM	0 to 70	LS374A
SN74LS374DBR.A	Active	Production	SSOP (DB) | 20	2000 | LARGE T&R	Yes	NIPDAU	Level-1-260C-UNLIM	0 to 70	LS374A
SN74LS374DW	Obsolete	Production	SOIC (DW) | 20	-	-	Call TI	Call TI	0 to 70	LS374
SN74LS374DWR	Active	Production	SOIC (DW) | 20	2000 | LARGE T&R	Yes	NIPDAU	Level-1-260C-UNLIM	0 to 70	LS374
SN74LS374DWR.A	Active	Production	SOIC (DW) | 20	2000 | LARGE T&R	Yes	NIPDAU	Level-1-260C-UNLIM	0 to 70	LS374
SN74LS374N	Active	Production	PDIP (N) | 20	20 | TUBE	Yes	NIPDAU	N/A for Pkg Type	0 to 70	SN74LS374N
SN74LS374N.A	Active	Production	PDIP (N) | 20	20 | TUBE	Yes	NIPDAU	N/A for Pkg Type	0 to 70	SN74LS374N
SN74LS374NE4	Active	Production	PDIP (N) | 20	20 | TUBE	Yes	NIPDAU	N/A for Pkg Type	0 to 70	SN74LS374N
SN74LS374NSR	Active	Production	SOP (NS) | 20	2000 | LARGE T&R	Yes	NIPDAU	Level-1-260C-UNLIM	0 to 70	74LS374
SN74LS374NSR.A	Active	Production	SOP (NS) | 20	2000 | LARGE T&R	Yes	NIPDAU	Level-1-260C-UNLIM	0 to 70	74LS374
SN74S373N	Active	Production	PDIP (N) | 20	20 | TUBE	Yes	NIPDAU	N/A for Pkg Type	0 to 70	SN74S373N
SN74S373N.A	Active	Production	PDIP (N) | 20	20 | TUBE	Yes	NIPDAU	N/A for Pkg Type	0 to 70	SN74S373N
SN74S374N	Active	Production	PDIP (N) | 20	20 | TUBE	Yes	NIPDAU	N/A for Pkg Type	0 to 70	SN74S374N
SN74S374N.A	Active	Production	PDIP (N) | 20	20 | TUBE	Yes	NIPDAU	N/A for Pkg Type	0 to 70	SN74S374N
SNJ54LS373FK	Active	Production	LCCC (FK) | 20	55 | TUBE	No	SNPB	N/A for Pkg Type	-55 to 125	SNJ54LS 373FK
SNJ54LS373FK.A	Active	Production	LCCC (FK) | 20	55 | TUBE	No	SNPB	N/A for Pkg Type	-55 to 125	SNJ54LS 373FK
SNJ54LS373J	Active	Production	CDIP (J) | 20	20 | TUBE	No	SNPB	N/A for Pkg Type	-55 to 125	SNJ54LS373J
SNJ54LS373J.A	Active	Production	CDIP (J) | 20	20 | TUBE	No	SNPB	N/A for Pkg Type	-55 to 125	SNJ54LS373J
SNJ54LS373W	Active	Production	CFP (W) | 20	25 | TUBE	No	SNPB	N/A for Pkg Type	-55 to 125	SNJ54LS373W
SNJ54LS373W.A	Active	Production	CFP (W) | 20	25 | TUBE	No	SNPB	N/A for Pkg Type	-55 to 125	SNJ54LS373W
SNJ54LS374FK	Active	Production	LCCC (FK) | 20	55 | TUBE	No	SNPB	N/A for Pkg Type	-55 to 125	78011022A SNJ54LS 374FK
SNJ54LS374FK.A	Active	Production	LCCC (FK) | 20	55 | TUBE	No	SNPB	N/A for Pkg Type	-55 to 125	78011022A SNJ54LS 374FK

Orderable part number	Status (1)	Material type (2)	Package | Pins	Package qty | Carrier	RoHS (3)	Lead finish/ Ball material (4)	MSL rating/ Peak reflow (5)	Op temp (°C)	Part marking (6)
SNJ54LS374J	Active	Production	CDIP (J) | 20	20 | TUBE	No	SNPB	N/A for Pkg Type	-55 to 125	7801102RA SNJ54LS374J
SNJ54LS374J.A	Active	Production	CDIP (J) | 20	20 | TUBE	No	SNPB	N/A for Pkg Type	-55 to 125	7801102RA SNJ54LS374J
SNJ54LS374W	Active	Production	CFP (W) | 20	25 | TUBE	No	SNPB	N/A for Pkg Type	-55 to 125	7801102SA SNJ54LS374W
SNJ54LS374W.A	Active	Production	CFP (W) | 20	25 | TUBE	No	SNPB	N/A for Pkg Type	-55 to 125	7801102SA SNJ54LS374W
SNJ54S373FK	Active	Production	LCCC (FK) | 20	55 | TUBE	No	SNPB	N/A for Pkg Type	-55 to 125	SNJ54S 373FK
SNJ54S373FK.A	Active	Production	LCCC (FK) | 20	55 | TUBE	No	SNPB	N/A for Pkg Type	-55 to 125	SNJ54S 373FK
SNJ54S373J	Active	Production	CDIP (J) | 20	20 | TUBE	No	SNPB	N/A for Pkg Type	-55 to 125	SNJ54S373J
SNJ54S373J.A	Active	Production	CDIP (J) | 20	20 | TUBE	No	SNPB	N/A for Pkg Type	-55 to 125	SNJ54S373J
SNJ54S374FK	Active	Production	LCCC (FK) | 20	55 | TUBE	No	SNPB	N/A for Pkg Type	-55 to 125	SNJ54S 374FK
SNJ54S374FK.A	Active	Production	LCCC (FK) | 20	55 | TUBE	No	SNPB	N/A for Pkg Type	-55 to 125	SNJ54S 374FK
SNJ54S374J	Active	Production	CDIP (J) | 20	20 | TUBE	No	SNPB	N/A for Pkg Type	-55 to 125	SNJ54S374J
SNJ54S374J.A	Active	Production	CDIP (J) | 20	20 | TUBE	No	SNPB	N/A for Pkg Type	-55 to 125	SNJ54S374J
SNJ54S374W	Active	Production	CFP (W) | 20	25 | TUBE	No	SNPB	N/A for Pkg Type	-55 to 125	SNJ54S374W
SNJ54S374W.A	Active	Production	CFP (W) | 20	25 | TUBE	No	SNPB	N/A for Pkg Type	-55 to 125	SNJ54S374W

(1) **Status:** For more details on status, see our product life cycle.

(2) **Material type:** When designated, preproduction parts are prototypes/experimental devices, and are not yet approved or released for full production. Testing and final process, including without limitation quality assurance, reliability performance testing, and/or process qualification, may not yet be complete, and this item is subject to further changes or possible discontinuation. If available for ordering, purchases will be subject to an additional waiver at checkout, and are intended for early internal evaluation purposes only. These items are sold without warranties of any kind.

(3) **RoHS values:** Yes, No, RoHS Exempt. See the TI RoHS Statement for additional information and value definition.

(4) **Lead finish/Ball material:** Parts may have multiple material finish options. Finish options are separated by a vertical ruled line. Lead finish/Ball material values may wrap to two lines if the finish value exceeds the maximum column width.

(5) **MSL rating/Peak reflow:** The moisture sensitivity level ratings and peak solder (reflow) temperatures. In the event that a part has multiple moisture sensitivity ratings, only the lowest level per JEDEC standards is shown. Refer to the shipping label for the actual reflow temperature that will be used to mount the part to the printed circuit board.

(6) **Part marking:** There may be an additional marking, which relates to the logo, the lot trace code information, or the environmental category of the part.

Multiple part markings will be inside parentheses. Only one part marking contained in parentheses and separated by a "~" will appear on a part. If a line is indented then it is a continuation of the previous line and the two combined represent the entire part marking for that device.

Important Information and Disclaimer: The information provided on this page represents TI's knowledge and belief as of the date that it is provided. TI bases its knowledge and belief on information provided by third parties, and makes no representation or warranty as to the accuracy of such information. Efforts are underway to better integrate information from third parties. TI has taken and continues to take reasonable steps to provide representative and accurate information but may not have conducted destructive testing or chemical analysis on incoming materials and chemicals. TI and TI suppliers consider certain information to be proprietary, and thus CAS numbers and other limited information may not be available for release.

In no event shall TI's liability arising out of such information exceed the total purchase price of the TI part(s) at issue in this document sold by TI to Customer on an annual basis.

OTHER QUALIFIED VERSIONS OF SN54LS373, SN54LS373-SP, SN54LS374, SN54S373, SN54S374, SN74LS373, SN74LS374, SN74S373, SN74S374 :

- Catalog : SN74LS373, SN54LS373, SN74LS374, SN74S373, SN74S374
- Military : SN54LS373, SN54LS374, SN54S373, SN54S374
- Space : SN54LS373-SP

NOTE: Qualified Version Definitions:

- Catalog - TI's standard catalog product
- Military - QML certified for Military and Defense Applications
- Space - Radiation tolerant, ceramic packaging and qualified for use in Space-based application

TAPE AND REEL INFORMATION

REEL DIMENSIONS

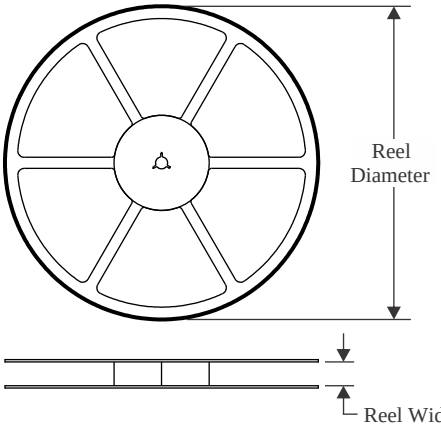

TAPE DIMENSIONS

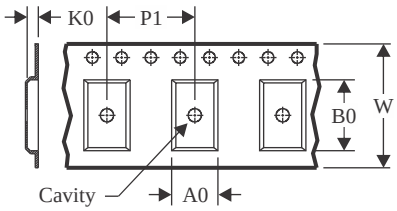

A0	Dimension designed to accommodate the component width
B0	Dimension designed to accommodate the component length
K0	Dimension designed to accommodate the component thickness
W	Overall width of the carrier tape
P1	Pitch between successive cavity centers

QUADRANT ASSIGNMENTS FOR PIN 1 ORIENTATION IN TAPE

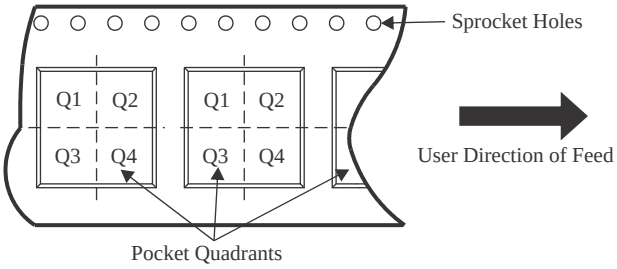

*All dimensions are nominal

Device	Package Type	Package Drawing	Pins	SPQ	Reel Diameter (mm)	Reel Width W1 (mm)	A0 (mm)	B0 (mm)	K0 (mm)	P1 (mm)	W (mm)	Pin1 Quadrant
SN74LS373DWR	SOIC	DW	20	2000	330.0	24.4	10.9	13.3	2.7	12.0	24.0	Q1
SN74LS373DWR	SOIC	DW	20	2000	330.0	24.4	10.8	13.3	2.7	12.0	24.0	Q1
SN74LS373NSR	SOP	NS	20	2000	330.0	24.4	8.4	13.0	2.5	12.0	24.0	Q1
SN74LS373NSR	SOP	NS	20	2000	330.0	24.4	8.4	13.0	2.5	12.0	24.0	Q1
SN74LS374DBR	SSOP	DB	20	2000	330.0	16.4	8.2	7.5	2.5	12.0	16.0	Q1
SN74LS374DWR	SOIC	DW	20	2000	330.0	24.4	10.8	13.3	2.7	12.0	24.0	Q1
SN74LS374NSR	SOP	NS	20	2000	330.0	24.4	8.4	13.0	2.5	12.0	24.0	Q1

TAPE AND REEL BOX DIMENSIONS

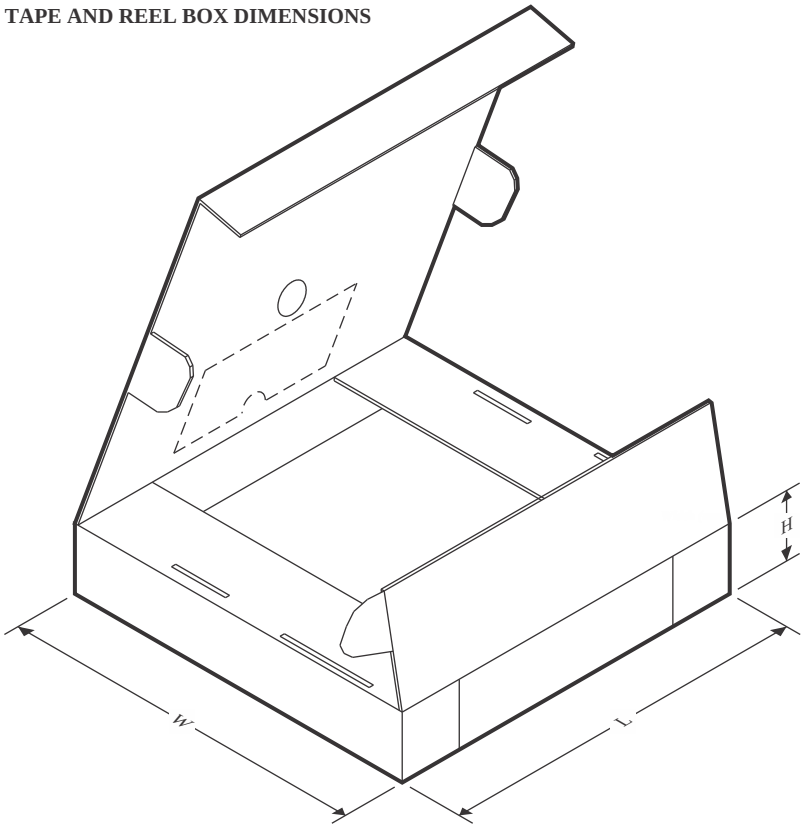

*All dimensions are nominal

Device	Package Type	Package Drawing	Pins	SPQ	Length (mm)	Width (mm)	Height (mm)
SN74LS373DWR	SOIC	DW	20	2000	367.0	367.0	45.0
SN74LS373DWR	SOIC	DW	20	2000	367.0	367.0	45.0
SN74LS373NSR	SOP	NS	20	2000	367.0	367.0	45.0
SN74LS373NSR	SOP	NS	20	2000	367.0	367.0	45.0
SN74LS374DBR	SSOP	DB	20	2000	356.0	356.0	35.0
SN74LS374DWR	SOIC	DW	20	2000	367.0	367.0	45.0
SN74LS374NSR	SOP	NS	20	2000	356.0	356.0	41.0

TUBE

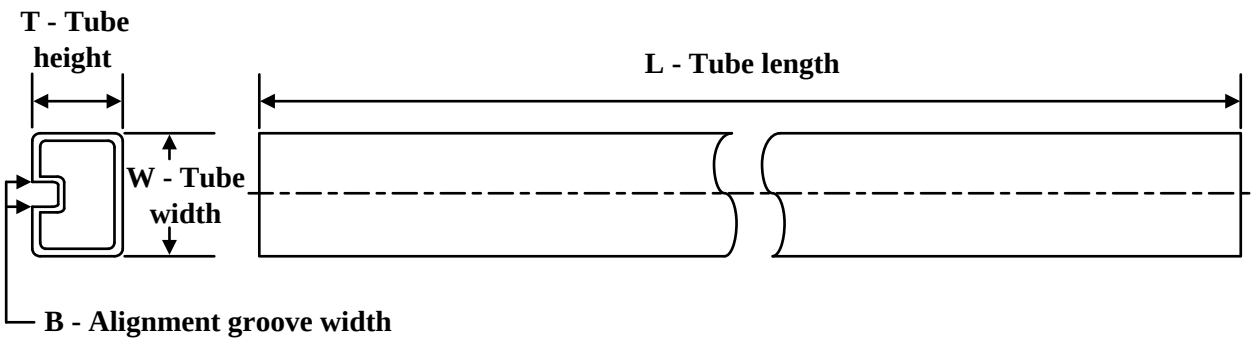

*All dimensions are nominal

Device	Package Name	Package Type	Pins	SPQ	L (mm)	W (mm)	T (µm)	B (mm)
78011022A	FK	LCCC	20	55	506.98	12.06	2030	NA
7801102SA	W	CFP	20	25	506.98	26.16	6220	NA
JM38510/32502B2A	FK	LCCC	20	55	506.98	12.06	2030	NA
JM38510/32502B2A.A	FK	LCCC	20	55	506.98	12.06	2030	NA
JM38510/32502BSA	W	CFP	20	25	506.98	26.16	6220	NA
JM38510/32502BSA.A	W	CFP	20	25	506.98	26.16	6220	NA
JM38510/32502SSA	W	CFP	20	25	506.98	26.16	6220	NA
JM38510/32502SSA.A	W	CFP	20	25	506.98	26.16	6220	NA
JM38510/32503B2A	FK	LCCC	20	55	506.98	12.06	2030	NA
JM38510/32503B2A.A	FK	LCCC	20	55	506.98	12.06	2030	NA
JM38510/32503BSA	W	CFP	20	25	506.98	26.16	6220	NA
JM38510/32503BSA.A	W	CFP	20	25	506.98	26.16	6220	NA
M38510/32502B2A	FK	LCCC	20	55	506.98	12.06	2030	NA
M38510/32502BSA	W	CFP	20	25	506.98	26.16	6220	NA
M38510/32502SSA	W	CFP	20	25	506.98	26.16	6220	NA
M38510/32503B2A	FK	LCCC	20	55	506.98	12.06	2030	NA
M38510/32503BSA	W	CFP	20	25	506.98	26.16	6220	NA
SN74LS373N	N	PDIP	20	20	506	13.97	11230	4.32
SN74LS373N.A	N	PDIP	20	20	506	13.97	11230	4.32
SN74LS373NE4	N	PDIP	20	20	506	13.97	11230	4.32
SN74LS374N	N	PDIP	20	20	506	13.97	11230	4.32
SN74LS374N.A	N	PDIP	20	20	506	13.97	11230	4.32
SN74LS374NE4	N	PDIP	20	20	506	13.97	11230	4.32
SN74S373N	N	PDIP	20	20	506	13.97	11230	4.32
SN74S373N.A	N	PDIP	20	20	506	13.97	11230	4.32
SN74S374N	N	PDIP	20	20	506	13.97	11230	4.32
SN74S374N.A	N	PDIP	20	20	506	13.97	11230	4.32
SNJ54LS373FK	FK	LCCC	20	55	506.98	12.06	2030	NA
SNJ54LS373FK.A	FK	LCCC	20	55	506.98	12.06	2030	NA

Device	Package Name	Package Type	Pins	SPQ	L (mm)	W (mm)	T (µm)	B (mm)
SNJ54LS373W	W	CFP	20	25	506.98	26.16	6220	NA
SNJ54LS373W.A	W	CFP	20	25	506.98	26.16	6220	NA
SNJ54LS374FK	FK	LCCC	20	55	506.98	12.06	2030	NA
SNJ54LS374FK.A	FK	LCCC	20	55	506.98	12.06	2030	NA
SNJ54LS374W	W	CFP	20	25	506.98	26.16	6220	NA
SNJ54LS374W.A	W	CFP	20	25	506.98	26.16	6220	NA
SNJ54S373FK	FK	LCCC	20	55	506.98	12.06	2030	NA
SNJ54S373FK.A	FK	LCCC	20	55	506.98	12.06	2030	NA
SNJ54S374FK	FK	LCCC	20	55	506.98	12.06	2030	NA
SNJ54S374FK.A	FK	LCCC	20	55	506.98	12.06	2030	NA
SNJ54S374W	W	CFP	20	25	506.98	26.16	6220	NA
SNJ54S374W.A	W	CFP	20	25	506.98	26.16	6220	NA

J (R–GDIP–T**) CERAMIC DUAL IN–LINE PACKAGE

14 LEADS SHOWN

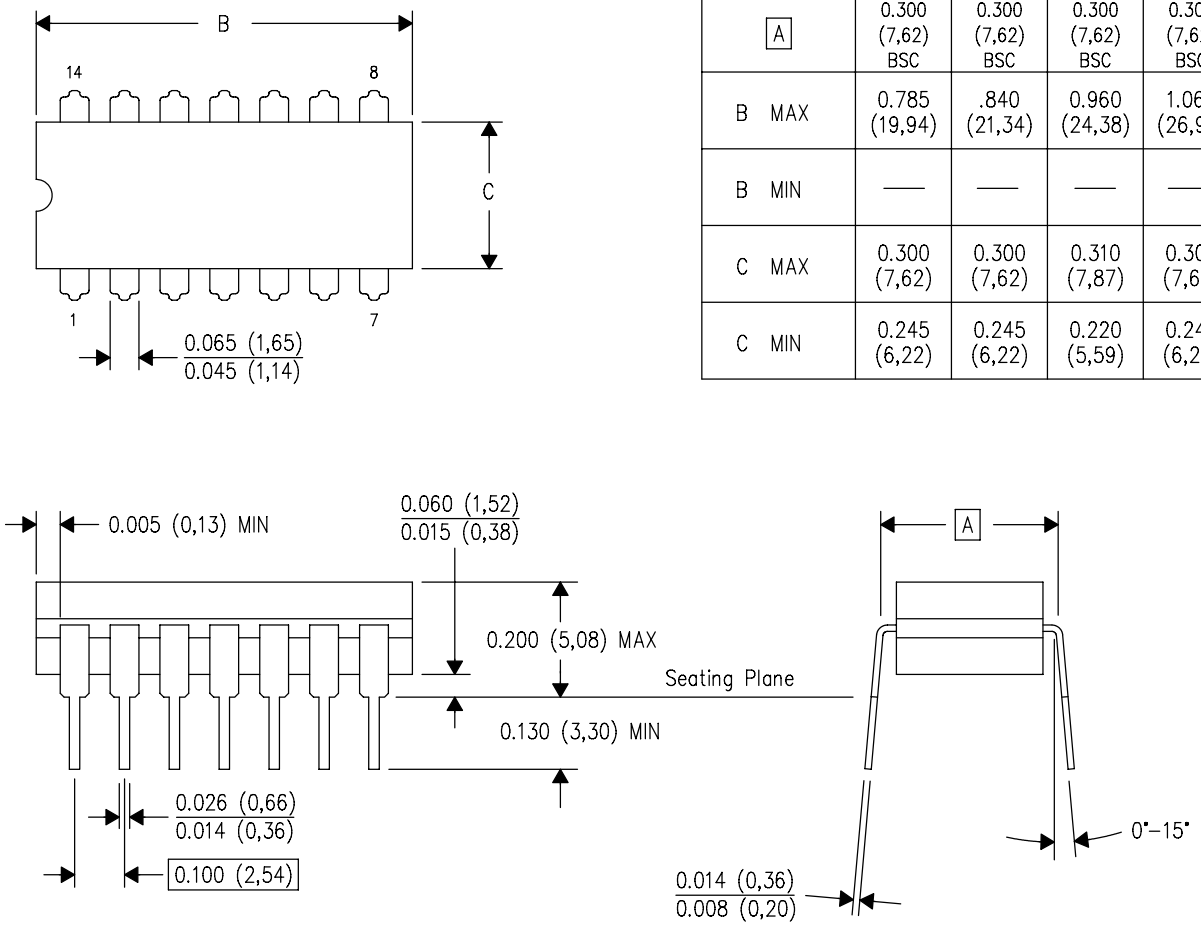

DIM \ PINS **	14	16	18	20
A	0.300 (7,62) BSC	0.300 (7,62) BSC	0.300 (7,62) BSC	0.300 (7,62) BSC
B MAX	0.785 (19,94)	.840 (21,34)	0.960 (24,38)	1.060 (26,92)
B MIN	—	—	—	—
C MAX	0.300 (7,62)	0.300 (7,62)	0.310 (7,87)	0.300 (7,62)
C MIN	0.245 (6,22)	0.245 (6,22)	0.220 (5,59)	0.245 (6,22)

4040083/F 03/03

NOTES:
- A. All linear dimensions are in inches (millimeters).
- B. This drawing is subject to change without notice.
- C. This package is hermetically sealed with a ceramic lid using glass frit.
- D. Index point is provided on cap for terminal identification only on press ceramic glass frit seal only.
- E. Falls within MIL STD 1835 GDIP1–T14, GDIP1–T16, GDIP1–T18 and GDIP1–T20.

GENERIC PACKAGE VIEW

FK 20

LCCC - 2.03 mm max height

8.89 x 8.89, 1.27 mm pitch

LEADLESS CERAMIC CHIP CARRIER

This image is a representation of the package family, actual package may vary.
Refer to the product data sheet for package details.

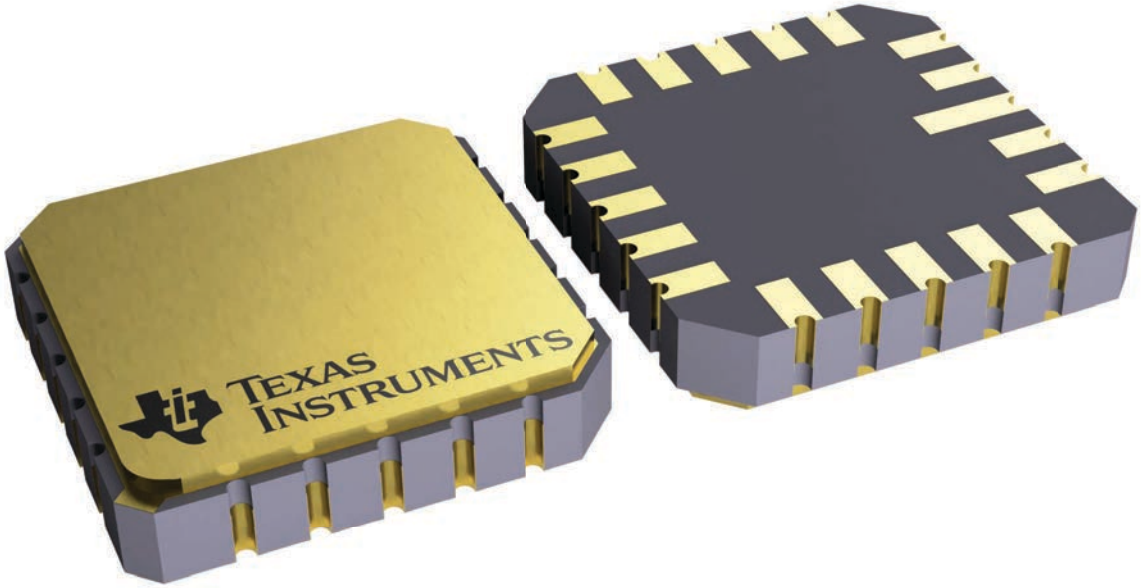

4229370VA\

N (R–PDIP–T**) PLASTIC DUAL–IN–LINE PACKAGE

16 PINS SHOWN

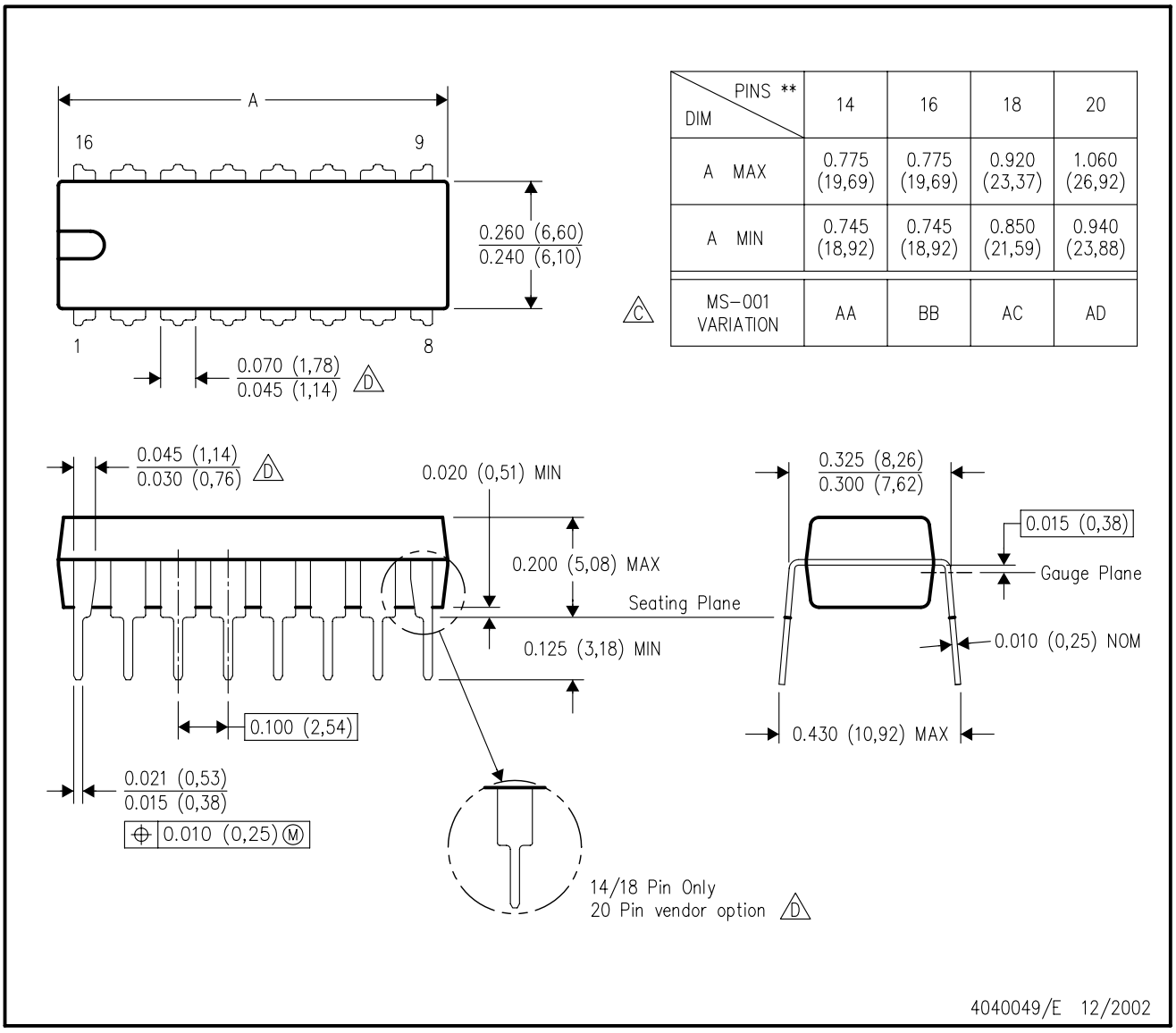

DIM \ PINS **	14	16	18	20
A MAX	0.775 (19,69)	0.775 (19,69)	0.920 (23,37)	1.060 (26,92)
A MIN	0.745 (18,92)	0.745 (18,92)	0.850 (21,59)	0.940 (23,88)
MS–001 VARIATION (C)	AA	BB	AC	AD

NOTES:
A. All linear dimensions are in inches (millimeters).
B. This drawing is subject to change without notice.
C. Falls within JEDEC MS–001, except 18 and 20 pin minimum body length (Dim A).
D. The 20 pin end lead shoulder width is a vendor option, either half or full width.

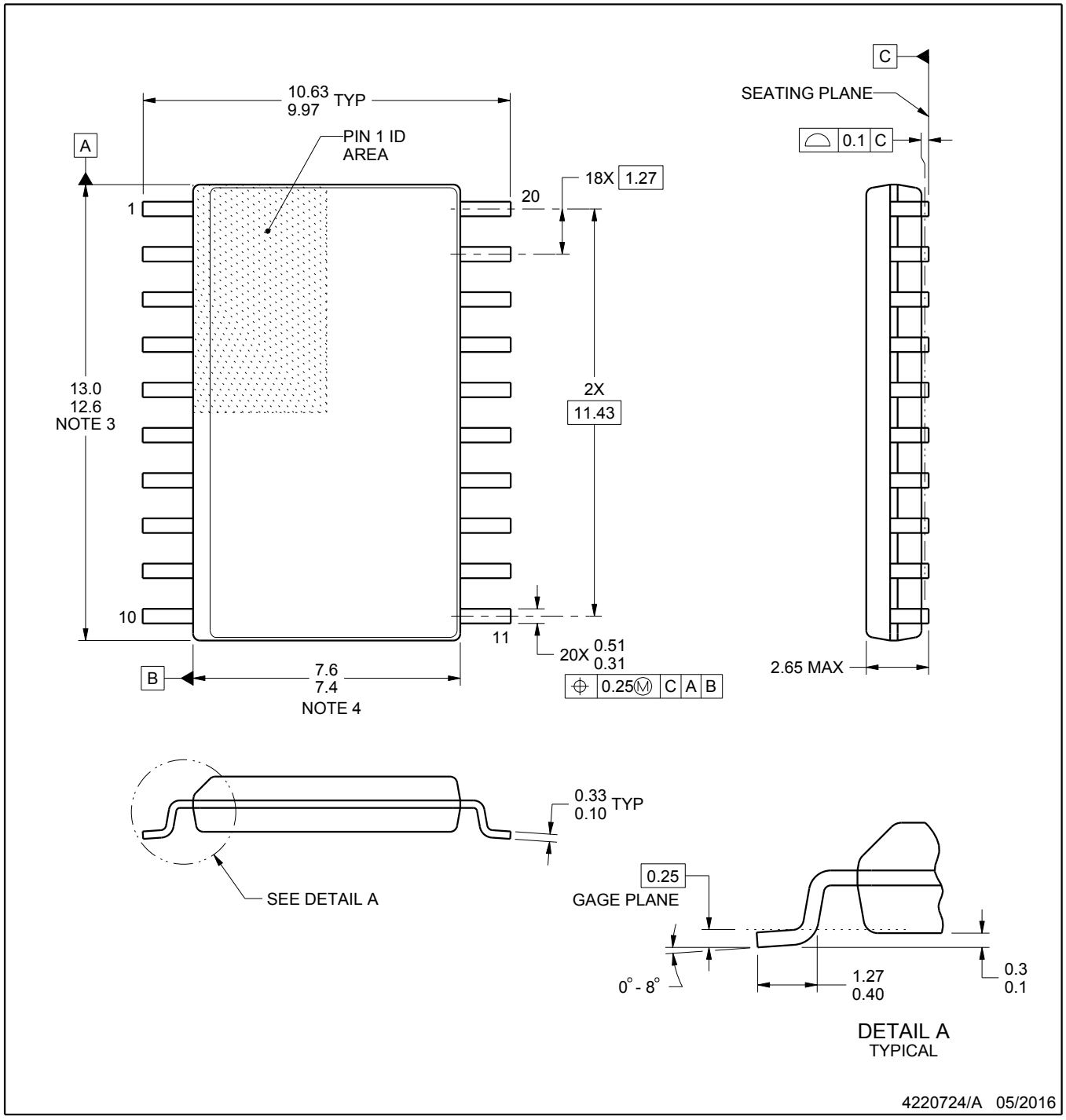

NOTES:

1. All linear dimensions are in millimeters. Dimensions in parenthesis are for reference only. Dimensioning and tolerancing per ASME Y14.5M.
2. This drawing is subject to change without notice.
3. This dimension does not include mold flash, protrusions, or gate burrs. Mold flash, protrusions, or gate burrs shall not exceed 0.15 mm per side.
4. This dimension does not include interlead flash. Interlead flash shall not exceed 0.43 mm per side.
5. Reference JEDEC registration MS-013.

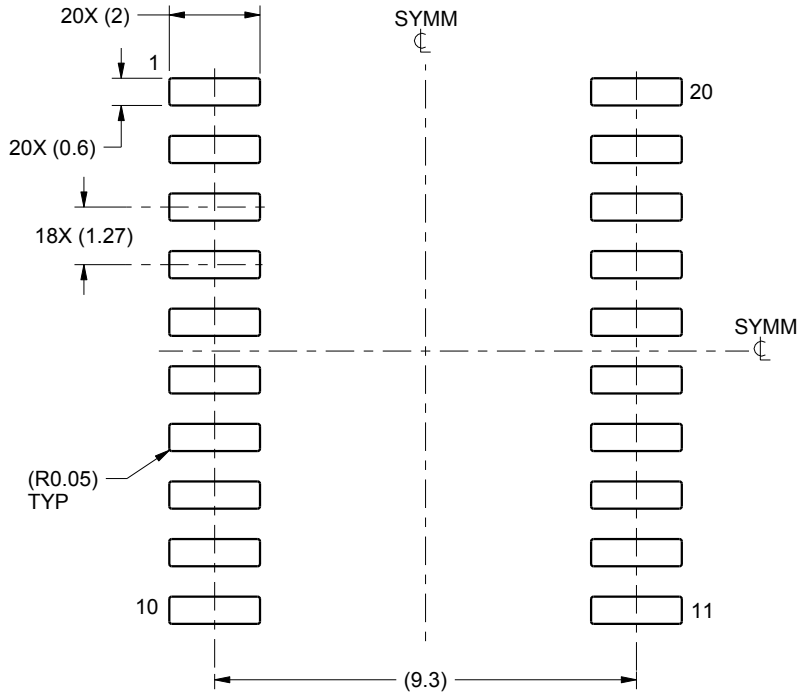

LAND PATTERN EXAMPLE
SCALE:6X

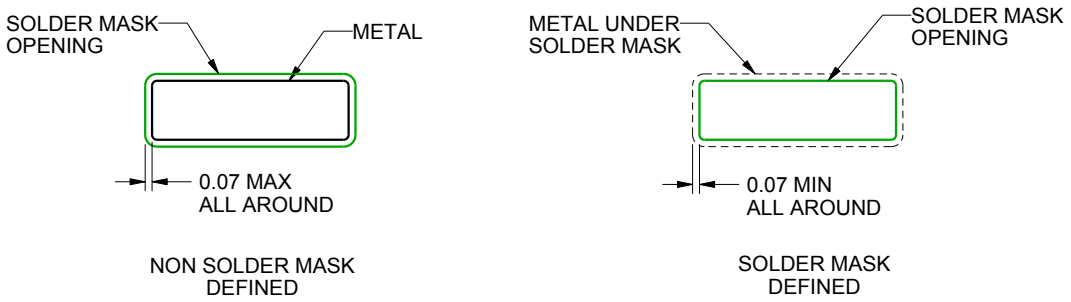

SOLDER MASK DETAILS

4220724/A 05/2016

NOTES: (continued)

6. Publication IPC-7351 may have alternate designs.
7. Solder mask tolerances between and around signal pads can vary based on board fabrication site.

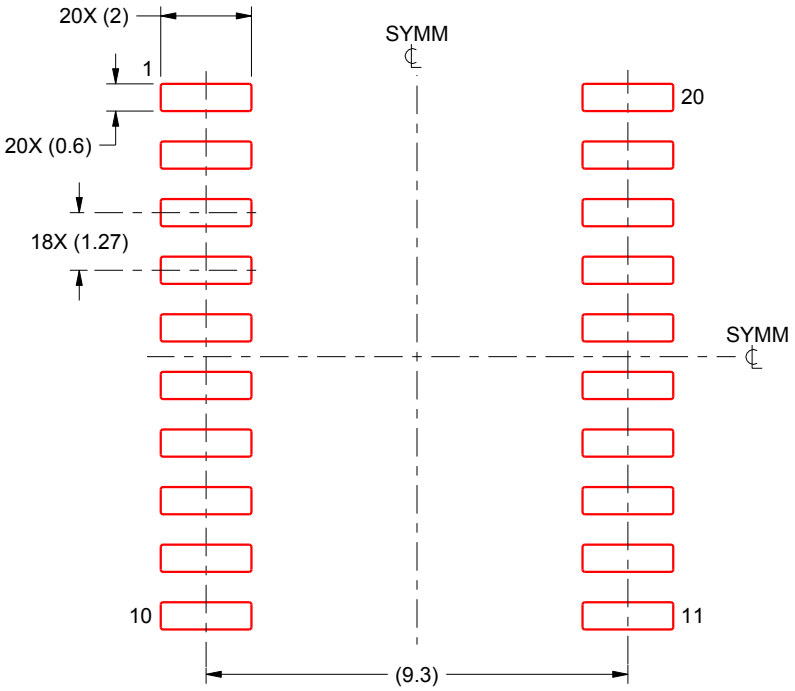

SOLDER PASTE EXAMPLE
BASED ON 0.125 mm THICK STENCIL
SCALE:6X

4220724/A 05/2016

NOTES: (continued)

8. Laser cutting apertures with trapezoidal walls and rounded corners may offer better paste release. IPC-7525 may have alternate design recommendations.
9. Board assembly site may have different recommendations for stencil design.

W (R–GDFP–F20) CERAMIC DUAL FLATPACK

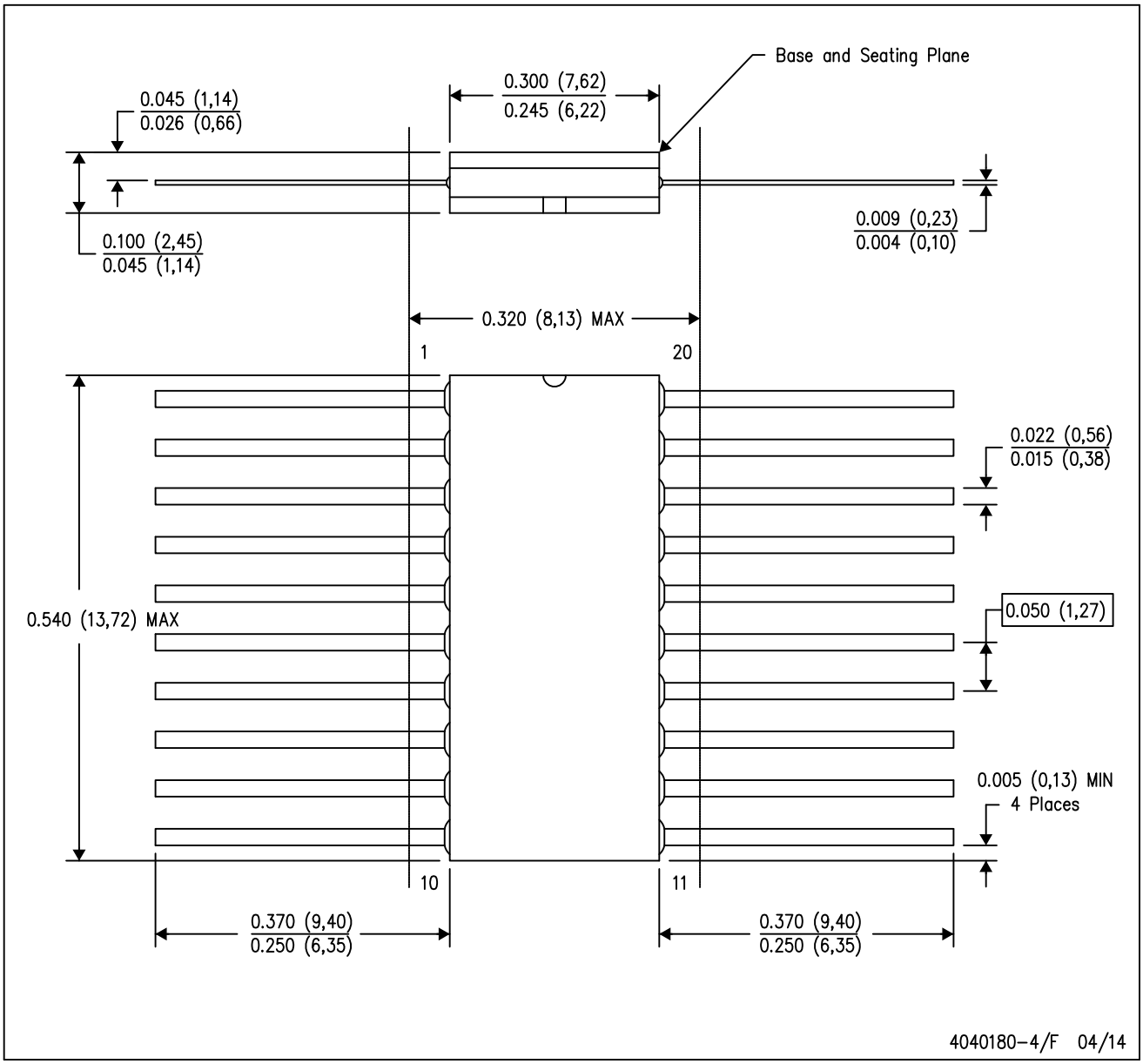

NOTES:
A. All linear dimensions are in inches (millimeters).
B. This drawing is subject to change without notice.
C. This package can be hermetically sealed with a ceramic lid using glass frit.
D. Index point is provided on cap for terminal identification only.
E. Falls within Mil–Std 1835 GDFP2–F20

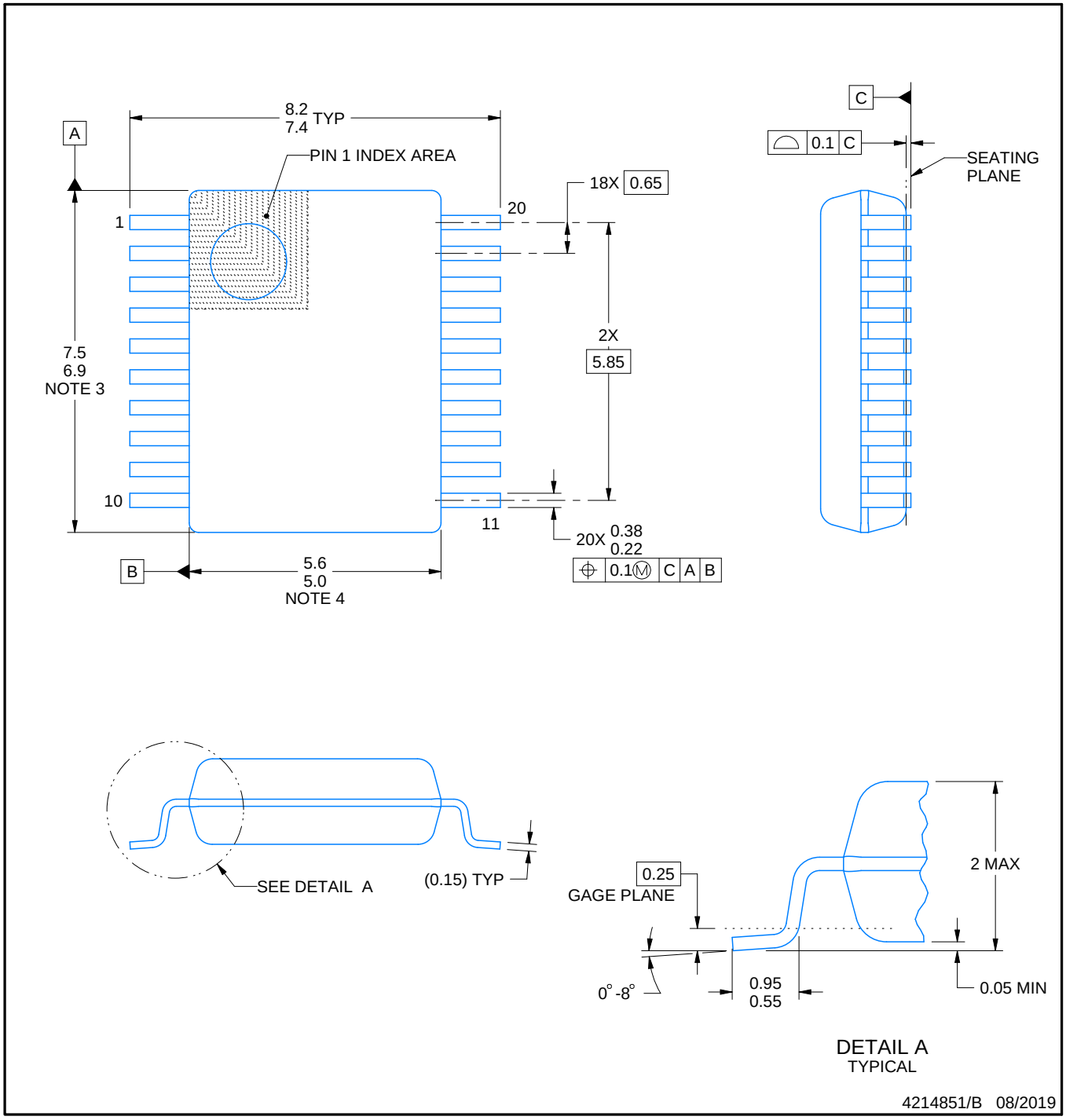

NOTES:

1. All linear dimensions are in millimeters. Any dimensions in parenthesis are for reference only. Dimensioning and tolerancing per ASME Y14.5M.
2. This drawing is subject to change without notice.
3. This dimension does not include mold flash, protrusions, or gate burrs. Mold flash, protrusions, or gate burrs shall not exceed 0.15 mm per side.
4. This dimension does not include interlead flash. Interlead flash shall not exceed 0.25 mm per side.
5. Reference JEDEC registration MO-150.

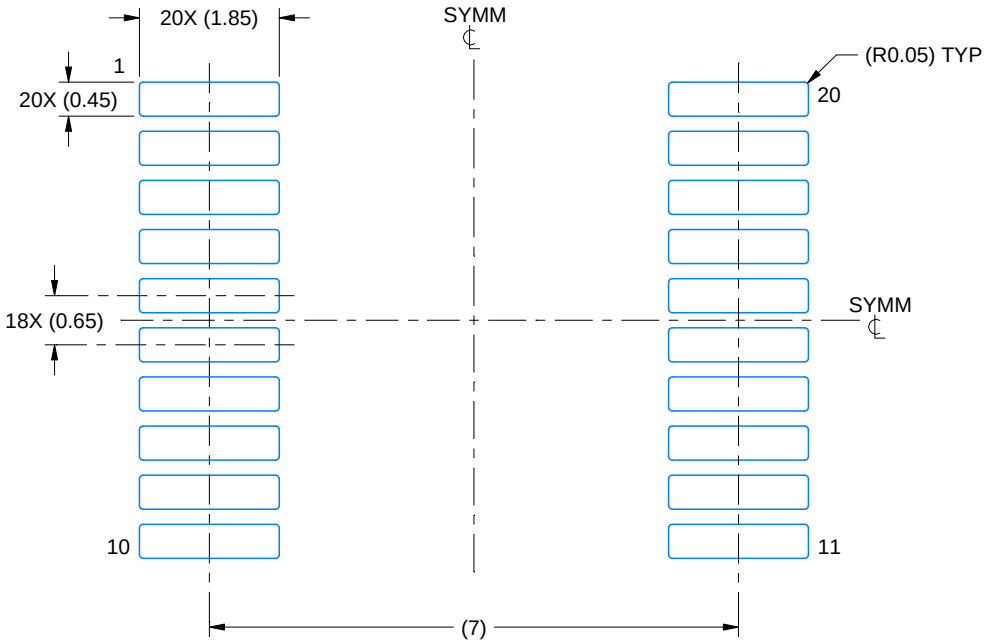

LAND PATTERN EXAMPLE
EXPOSED METAL SHOWN
SCALE: 10X

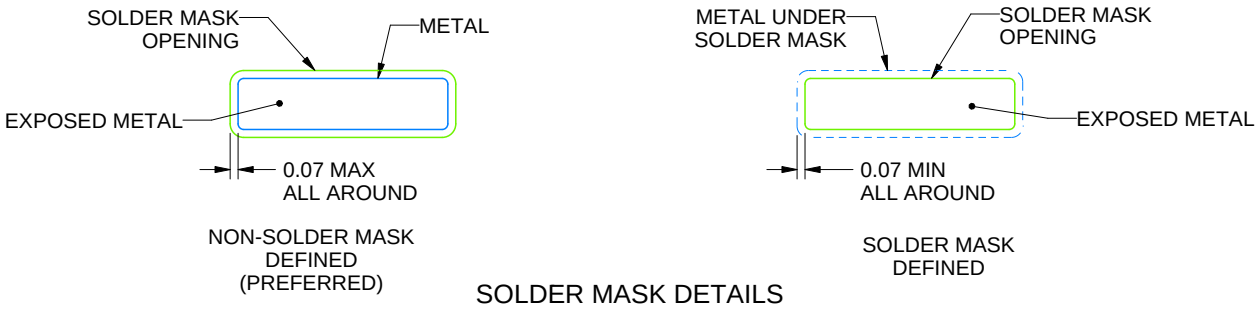

SOLDER MASK DETAILS

4214851/B 08/2019

NOTES: (continued)

6. Publication IPC-7351 may have alternate designs.
7. Solder mask tolerances between and around signal pads can vary based on board fabrication site.

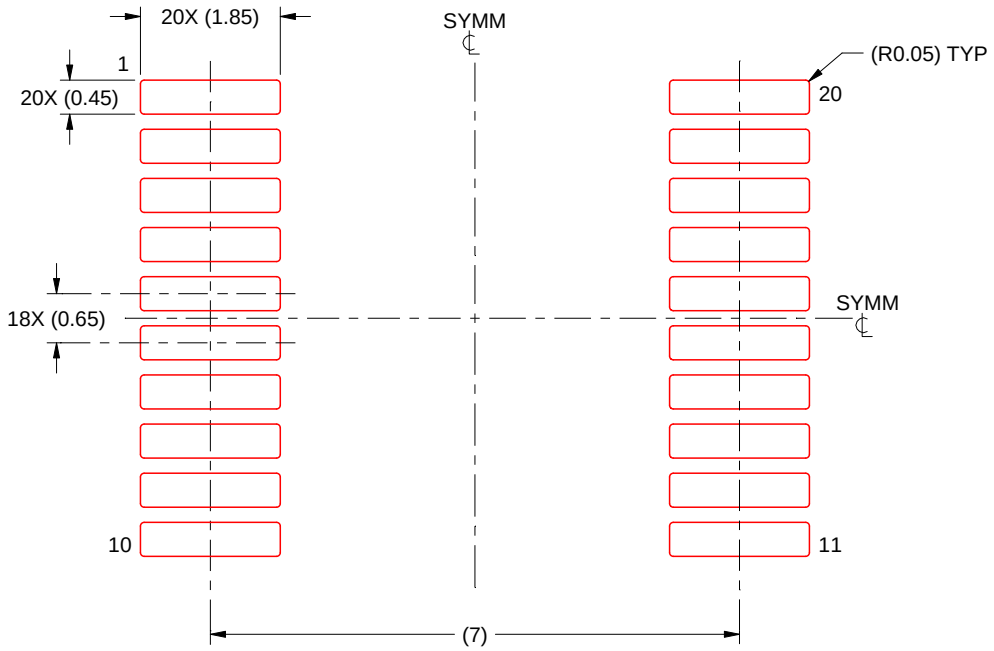

SOLDER PASTE EXAMPLE
BASED ON 0.125 mm THICK STENCIL
SCALE: 10X

4214851/B 08/2019

NOTES: (continued)

8. Laser cutting apertures with trapezoidal walls and rounded corners may offer better paste release. IPC-7525 may have alternate design recommendations.
9. Board assembly site may have different recommendations for stencil design.

MECHANICAL DATA

NS (R-PDSO-G)** **PLASTIC SMALL-OUTLINE PACKAGE**

14-PINS SHOWN

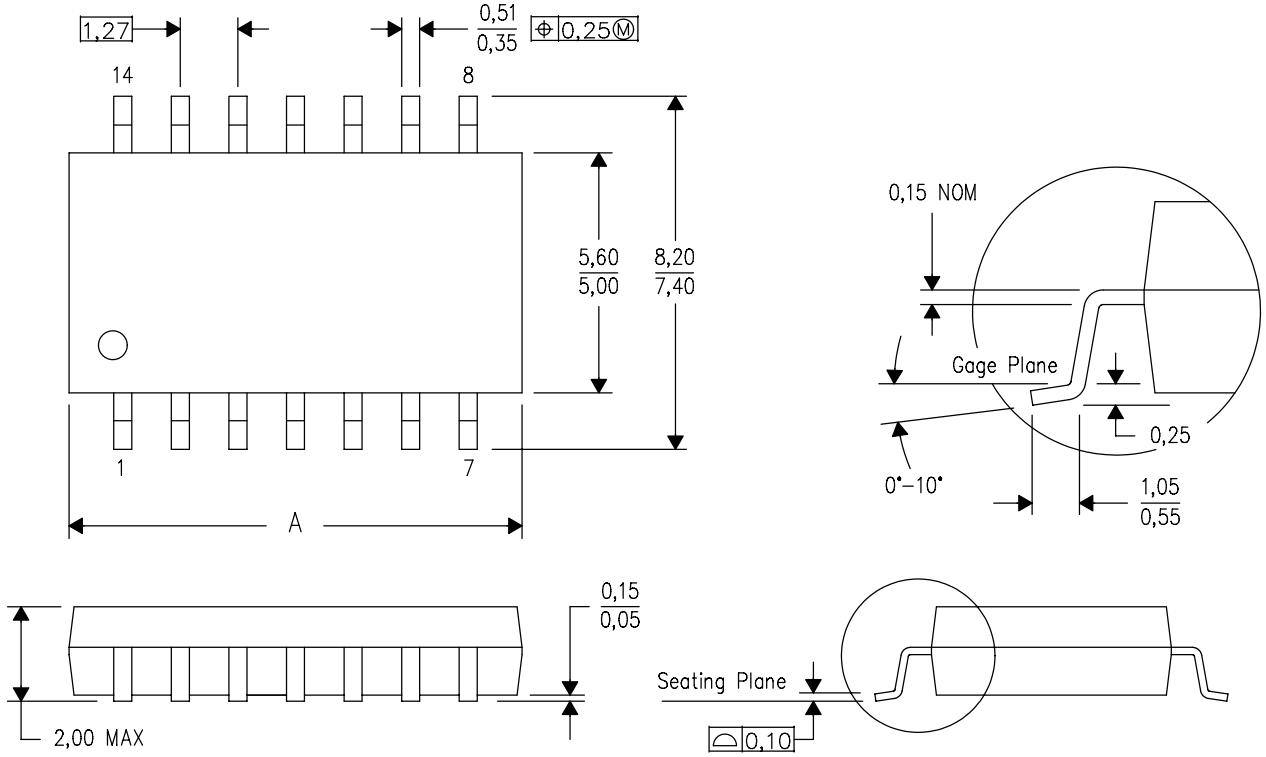

DIM \ PINS **	14	16	20	24
A MAX	10,50	10,50	12,90	15,30
A MIN	9,90	9,90	12,30	14,70

4040062/C 03/03

NOTES:
A. All linear dimensions are in millimeters.
B. This drawing is subject to change without notice.
C. Body dimensions do not include mold flash or protrusion, not to exceed 0,15.

IMPORTANT NOTICE AND DISCLAIMER

TI PROVIDES TECHNICAL AND RELIABILITY DATA (INCLUDING DATA SHEETS), DESIGN RESOURCES (INCLUDING REFERENCE DESIGNS), APPLICATION OR OTHER DESIGN ADVICE, WEB TOOLS, SAFETY INFORMATION, AND OTHER RESOURCES “AS IS” AND WITH ALL FAULTS, AND DISCLAIMS ALL WARRANTIES, EXPRESS AND IMPLIED, INCLUDING WITHOUT LIMITATION ANY IMPLIED WARRANTIES OF MERCHANTABILITY, FITNESS FOR A PARTICULAR PURPOSE OR NON-INFRINGEMENT OF THIRD PARTY INTELLECTUAL PROPERTY RIGHTS.

These resources are intended for skilled developers designing with TI products. You are solely responsible for (1) selecting the appropriate TI products for your application, (2) designing, validating and testing your application, and (3) ensuring your application meets applicable standards, and any other safety, security, regulatory or other requirements.

These resources are subject to change without notice. TI grants you permission to use these resources only for development of an application that uses the TI products described in the resource. Other reproduction and display of these resources is prohibited. No license is granted to any other TI intellectual property right or to any third party intellectual property right. TI disclaims responsibility for, and you will fully indemnify TI and its representatives against, any claims, damages, costs, losses, and liabilities arising out of your use of these resources.

TI’s products are provided subject to TI’s Terms of Sale or other applicable terms available either on ti.com or provided in conjunction with such TI products. TI’s provision of these resources does not expand or otherwise alter TI’s applicable warranties or warranty disclaimers for TI products.

TI objects to and rejects any additional or different terms you may have proposed.

Mailing Address: Texas Instruments, Post Office Box 655303, Dallas, Texas 75265
Copyright © 2025, Texas Instruments Incorporated