LED DRIVER

Check for Samples: TLC5922

FEATURES

- **16 Channels**
- **Drive Capability**
  - **0 to 80 mA (Constant-Current Sink)**
- **Constant Current Accuracy**
  - **±1% (typical)**
- **Serial Data Interface, SPI Compatible**
- **Fast Switching Output: T_r / T_f = 10ns (typical)**
- **CMOS Level Input/Output**
- **30 MHz Data Transfer Rate**
- **V_{CC} = 3.0 V to 5.5 V**
- **Operating Temperature = –20°C to 85 °C**
- **LED Supply Voltage up to 17 V**
- **32-pin HTSSOP (PowerPAD™) Package**
- **Dot Correction**
  - **7 bit (128 Steps)**
  - **Individually Adjustable For Each Channel**
- **Controlled In-Rush Current**

APPLICATIONS

- **Monocolor, Multicolor, Fullcolor LED Display**
- **Monocolor, Multicolor LED Signboard**
- **Display Backlighting**
- **Multicolor LED Lighting Applications**

DESCRIPTION

The TLC5922 is a 16-channel constant-current sink driver. Each channel has an On/Off state and a 128-step adjustable constant-current sink (dot correction). The dot correction adjusts the brightness variations between LED, LED channels, and other LED drivers. Both dot correction and On/Off state are accessible via a serial data interface. A single external resistor sets the maximum current of all 16 channels.

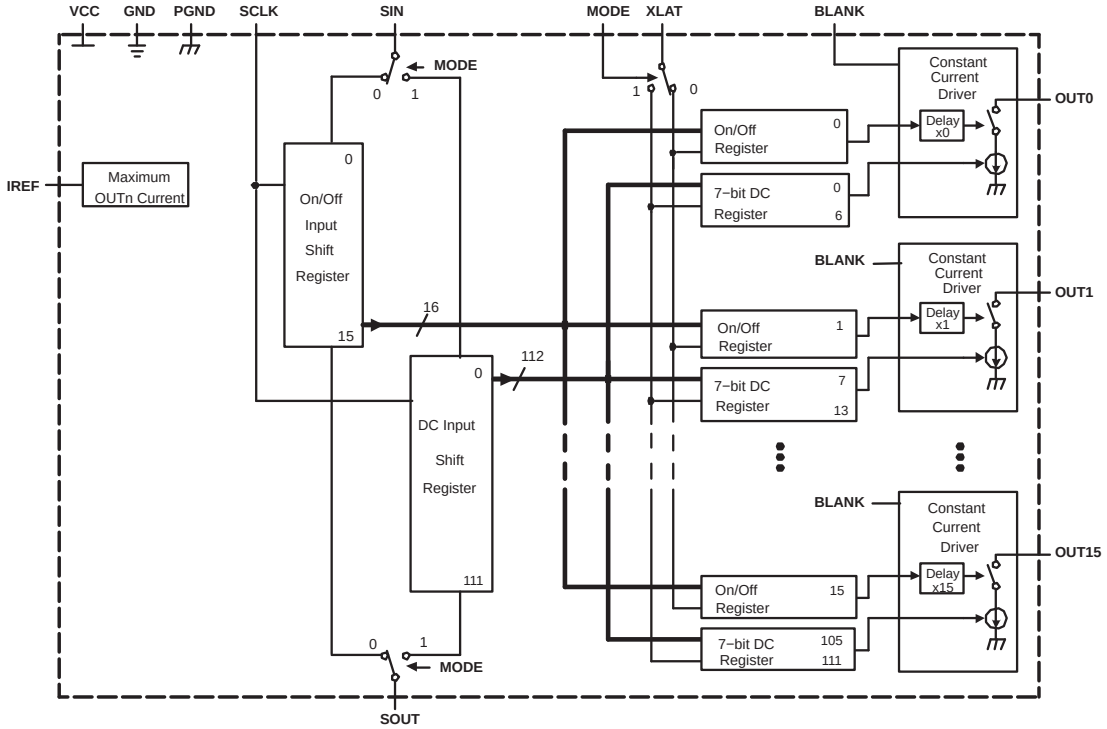

Figure 1. Functional Block Diagram

Please be aware that an important notice concerning availability, standard warranty, and use in critical applications of Texas Instruments semiconductor products and disclaimers thereto appears at the end of this data sheet.

PowerPAD is a trademark of Texas Instruments.

PRODUCTION DATA information is current as of publication date. Products conform to specifications per the terms of the Texas Instruments standard warranty. Production processing does not necessarily include testing of all parameters.

Copyright © 2003–2009, Texas Instruments Incorporated

This integrated circuit can be damaged by ESD. Texas Instruments recommends that all integrated circuits be handled with appropriate precautions. Failure to observe proper handling and installation procedures can cause damage.

ESD damage can range from subtle performance degradation to complete device failure. Precision integrated circuits may be more susceptible to damage because very small parametric changes could cause the device not to meet its published specifications.

ORDERING INFORMATION(1)

T_A	Package	Part Number (2)
–20 °C to 85 °C	4 mm x 4 mm, 32-pin HTSSOP	TLC5922DAP

(1) For the most current package and ordering information, see the Package Option Addendum at the end of this document, or see the TI website at www.ti.com.
(2) The DAP package is available in tape and reel. Add R suffix (TLC5922DAPR) to order quantities of 2000 parts per reel.

ABSOLUTE MAXIMUM RATINGS (1) (2)

			TLC5922	UNIT
V_{CC}	Supply voltage(2)		–0.3 to 6	V
I_O	Output current (dc)	$I_{L(LC)}$	90	mA
V_I	Input voltage range(2)	$V_{(BLANK)}$, $V_{(XLAT)}$, $V_{(SCLK)}$, $V_{(SIN)}$, $V_{(MODE)}$	–0.3 to V_{CC} + 0.3	V
V_O	Output voltage range(2)	$V_{(SOUT)}$	–0.3 to V_{CC} + 0.3	V
		$V_{(OUT0)}$ – $V_{(OUT15)}$	–0.3 to 18	V
	ESD rating	HBM (JEDEC JESD22-A114, Human Body Model)	2	kV
		CDM (JEDEC JESD22-C101, Charged Device Model)	500	V
T_{stg}	Storage temperature range		–40 to 150	°C
	Continuous total power dissipation at (or below) T_A = 25°C		3.9	W
	Power dissipation rating at (or above) T_A = 25°C		31.4	mW/°C

(1) Stresses beyond those listed under *Absolute Maximum Ratings* may cause permanent damage to the device. These are stress ratings only, and functional operation of the device at these or any other conditions beyond those indicated under *Recommended Operating Conditions* is not implied. Exposure to absolute-maximum-rated conditions for extended periods may affect device reliability.
(2) All voltage values are with respect to network ground terminal.

RECOMMENDED OPERATING CONDITIONS
DC Characteristics

			MIN	NOM	MAX	UNIT
V_{CC}	Supply voltage		3		5.5	V
V_O	Voltage applied to output, (Out0 - Out15)				17	V
V_{IH}	High-level input voltage		0.8 VCC		VCC	V
V_{IL}	Low-level input voltage		GND		0.2 VCC	V
I_{OH}	High-level output current	V_{CC} = 5 V at SOUT			–1	mA
I_{OL}	Low-level output current	V_{CC} = 5 V at SOUT			1	mA
I_{OLC}	Constant output current	OUT0 to OUT15			80	mA
T_A	Operating free-air temperature range(1)		–20		85	°C

(1) Contact TI sales for slightly extended temperature range.

Copyright © 2003–2009, Texas Instruments Incorporated

AC Characteristics

V_{CC} = 3 V to 5.5 V, T_A = –20°C to 85°C (unless otherwise noted)

			MIN	TYP	MAX	UNIT
f_{SCLK}	Clock frequency	SCLK			30	MHz
t_{wh0}/t_{wl0}	CLK pulse duration	SCLK = H/L	16			ns
t_{wh1}	XLAT pulse duration	XLAT = H	20			ns
t_{su0}	Setup time	SIN – SCLK↑	10			ns
t_{su1}		SCLK↑ – XLAT↓	10			ns
t_{su2}		MODE↑↓ – SCLK↑	10			ns
t_{su3}		MODE↑↓ – XLAT↓	10			ns
t_{h0}	Hold time	SCLK↑ – SIN	10			ns
t_{h1}		XLAT↓ – SCLK↑	10			ns
t_{h2}		SCLK↑ – MODE↑↓	10			ns
t_{h3}		XLAT↓ – MODE↑↓	10			ns

ELECTRICAL CHARACTERISTICS

V_{CC} = 3 V to 5.5 V, T_A = –20°C to 85°C (unless otherwise noted)

PARAMETER		TEST CONDITIONS	MIN	TYP	MAX	UNIT
V_{OH}	High-level output voltage	I_{OH} = –1 mA, SOUT	V_{CC} –0.5			V
V_{OL}	Low-level output voltage	I_{OL} = 1 mA, SOUT			0.5	V
I_I	Input current	V_I = V_{CC} or GND, BLANK, XLAT, SCLK, SIN, MODE	–1		1	µA
I_{CC}	Supply current	No data transfer, All output OFF, V_O = 1 V, $R_{(IREF)}$ = 10 kΩ			6	mA
		No data transfer, All output OFF, V_O = 1 V, $R_{(IREF)}$ = 1.3 kΩ			12	
		Data transfer 30 MHz, All output ON, V_O = 1 V, $R_{(IREF)}$ = 1.3 kΩ			25	
		Data transfer 30 MHz, All output ON, V_O = 1 V, $R_{(IREF)}$ = 600 kΩ		36	65 (1)	
I_{OLC}	Constant output current	All output ON, V_O = 1 V, $R_{(IREF)}$ = 600 Ω	70	80	90	mA
I_{LO0}	Leakage output current	All output OFF, V_O = 15 V, $R_{(IREF)}$ = 600 Ω , OUT0 to OUT15			0.1	µA
ΔI_{OLC0}	Constant current error	All output ON, V_O = 1 V, $R_{(IREF)}$ = 600 Ω, OUT0 to OUT15		±1%	±4%	
ΔI_{OLC1}	Constant current error	device to device, averaged current from OUT0 to OUT15, $R_{(IREF)}$ = 600 Ω		±4%	±8.5%	
ΔI_{OLC2}	Power supply rejection ratio	All output ON, V_O = 1 V, $R_{(IREF)}$ = 600 Ω, OUT0 to OUT15		±1	±4	%/V
ΔI_{OLC3}	Load regulation	All output ON, V_O = 1 V to 3 V, $R_{(IREF)}$ = 600 Ω, OUT0 to OUT15		±2	±6	%/V
$V_{(IREF)}$	Reference voltage output	$R_{(IREF)}$ = 600 Ω	1.20	1.24	1.28	V

(1) Measured at device start-up temperature. Once the IC is operating (self heating), lower I_{CC} values are seen. See Figure 12 .

Copyright © 2003–2009, Texas Instruments Incorporated

SWITCHING CHARACTERISTICS

PARAMETER		TEST CONDITIONS	MIN	TYP	MAX	UNIT
t_{r0}	Rise time	SOUT(see (1))			16	ns
t_{r1}		OUTx, V_{CC} = 5 V, T_A = 60°C, DCx = 7F (see (2))		10	30	
t_{f0}	Fall time	SOUT (see (1))			16	ns
t_{f1}		OUTx, V_{CC} = 5 V, T_A = 60°C, DCx = 7F (see (2))		10	30	
t_{pd0}	Propagation delay time	SCLK↑ – SOUT↑ ↓ (see (3))			30	ns
t_{pd1}		MODE↑↓ – SOUT↑↓ (see (3))			30	
t_{pd2}		BLANK↓ – OUT0↑↓ (see (4))			60	
t_{pd3}		XLAT↑ – OUT0↑↓ (see (4))			60	
t_{pd4}		XLAT↑ – I_{OUT}(dot-correction) (see (5))			1000	
t_d	Output delay time	OUTn↑↓ – OUT(n+1)↑↓ (see (4))	14	22	30	ns

(1) See Figure 4 . Defined as from 10% to 90%
(2) See Figure 5 . Defined as from 10% to 90%
(3) See Figure 4 . Figure 10
(4) See Figure 5 and Figure 10
(5) See Figure 5 and Figure 10

DAP PACKAGE
(TOP VIEW)

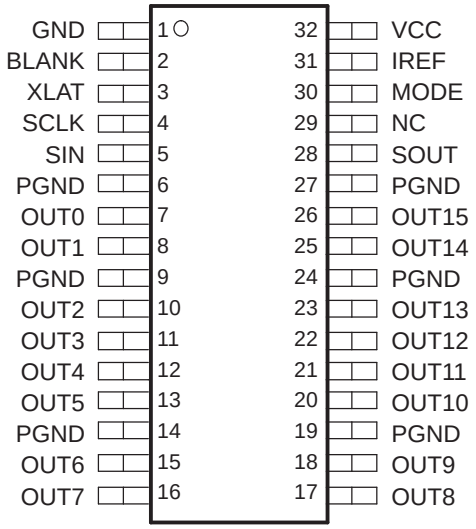

Terminal Functions

TERMINAL NAME	TERMINAL NO.	I/O	DESCRIPTION
BLANK	2	2	Blank (Light OFF). When BLANK = H, All OUTx outputs are forced OFF. When BLANK = L, ON/OFF of OUTx outputs are controlled by input data.
GND	1		Ground
IREF	31	I/O	Reference current terminal
MODE	30	I	Mode select. When MODE = L, SIN, SOUT, SCLK, XLAT are connected to ON/OFF control logic. When MODE = H, SIN, SOUT, SCLK, XLAT are connected to dot-correction logic.
OUT0	7	O	Constant current output
OUT1	8	O	Constant current output
OUT2	10	O	Constant current output
OUT3	11	O	Constant current output
OUT4	12	O	Constant current output
OUT5	13	O	Constant current output

Copyright © 2003–2009, Texas Instruments Incorporated

Terminal Functions (continued)

TERMINAL NAME	TERMINAL NO.	I/O	DESCRIPTION
OUT6	15	O	Constant current output
OUT7	16	O	Constant current output
OUT8	17	O	Constant current output
OUT9	18	O	Constant current output
OUT10	20	O	Constant current output
OUT11	21	O	Constant current output
OUT12	22	O	Constant current output
OUT13	23	O	Constant current output
OUT14	25	O	Constant current output
OUT15	26	O	Constant current output
PGND	6, 14, 19, 24, 27		Power ground
SCLK	4	I	Data shift clock. Note that the internal connections are switched by MODE (pin #30). At SCLK↑, the shift-registers selected by MODE shift the data.
SIN	5	I	Data input of serial I/F
SOUT	28	O	Data output of serial I/F
VCC	32		Power supply voltage
NC	29	–	Not Connected
XLAT	3	I	Data latch. Note that the internal connections are switched by MODE (pin #30). At XLAT↑, the latches selected by MODE get new data.

PIN EQUIVALENT INPUT AND OUTPUT SCHEMATIC DIAGRAMS

(Note: Resistor values are equivalent resistance and not tested).

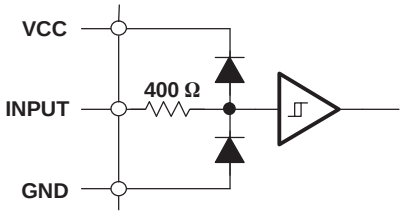

Figure 2. Input Equivalent Circuit (BLANK, XLAT, SCLK, SIN, MODE)

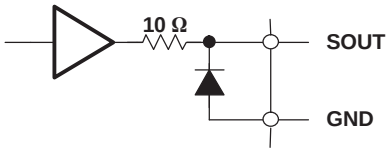

Figure 3. Output Equivalent Circuit

Copyright © 2003–2009, Texas Instruments Incorporated

PARAMETER MEASUREMENT INFORMATION

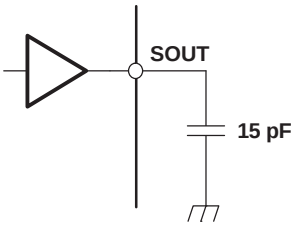

Figure 4. Test Circuit for t_{r0}, t_{f0}, t_{d0}, t_{d1}

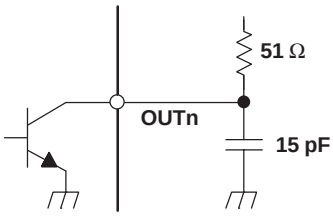

Figure 5. Test Circuit for t_{r1}, t_{f1}, t_{pd2}, t_{pd3}, t_{pd4}

Copyright © 2003–2009, Texas Instruments Incorporated

PRINCIPLES OF OPERATION

Setting Maximum Channel Current

The maximum output current per channel is set by a single external resistor, $R_{(IREF)}$, which is placed between IREF and GND. The voltage on IREF is set by an internal band gap $V_{(IREF)}$ with a typical value of 1.24V. The maximum channel current is equivalent to the current flowing through $R_{(IREF)}$ multiplied by a factor of 40. The maximum output current can be calculated by Equation 1:

$$I_{MAX} = \frac{V_{IREF}}{R_{IREF}} \times 40 \tag{1}$$

where:

V_{IREF} = 1.24V typ.

R_{IREF} = User selected external resistor (R_{IREF} should not be smaller than 600 Ω)

Figure 6 shows the maximum output current, $I_{O(LC)}$, versus $R_{(IREF)}$. In Figure 6, $R_{(IREF)}$ is the value of the resistor between IREF terminal to ground, and $I_{O(LC)}$ is the constant output current of OUT0,.....OUT15.

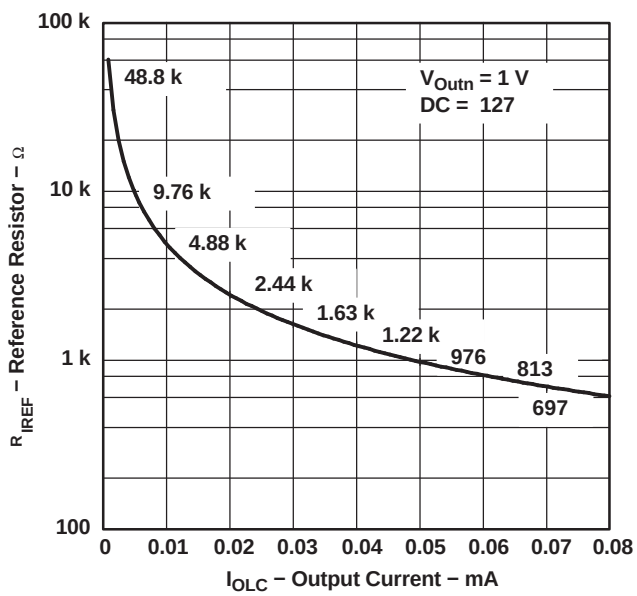

Figure 6. Reference Resistor vs Output Current

Setting Dot-Correction

The TLC5922 has the capability to fine adjust the current of each channel, OUT0 to OUT15 independently. This is also called dot correction. This feature is used to adjust the brightness deviations of LED connected to the output channels OUT0 to OUT15. Each of the 16 channels can be programmed with a 7-bit word. The channel output can be adjusted in 128 steps from 0% to 100% of the maximum output current I_{MAX}. Equation 2 determines the output current for each OUTn:

$$I_{Outn} = \frac{I_{MAX} \times DC_n}{127} \tag{2}$$

where:

I_{Max} = the maximum programmable current of each output

DCn = the programmed dot-correction value for output n (DCn = 0, 1, 2 ...127)

n = 0, 1, 2 ... 15

Dot-correction data are entered for all channels at the same time. The complete dot-correction data format consists of 16 x 7-bit words, which forms a 112-bit wide serial data packet. The channel data is put one after another. All data is clocked in with MSB first. Figure 7 shows the DC data format.

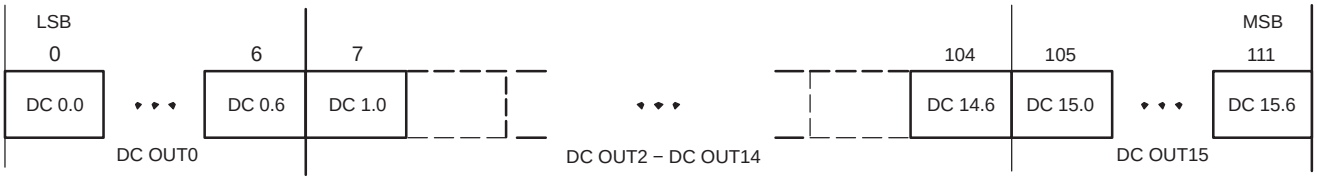

Figure 7. DC Data Format

MODE must be set to high to input data into the dot-correction register. The internal input shift register is then set to 112-bit width. After all serial data is clocked in, a rising edge of XLAT latches the data to the dot-correction register (Figure 10).

Output Enable

All OUTn channels of TLC5922 can switched off with one signal. When BLANK signal is set to high, all OUTn are disabled, regardless of On/Off status of each OUTn. When BLANK is set to low, all OUTn work under normal conditions.

Table 1. BLANK Signal Truth Table

BLANK	OUT0 - OUT15
LOW	Normal condition
HIGH	Disabled

Setting Channel On/Off Status

All OUTn channels of TLC5922 can be switched on or off independently. Each of the channels can be programmed with a 1-bit word. On/Off data are entered for all channels at the same time. The complete On/Off data format consists of 16 x 1-bit words, which form a 16-bit wide data packet. The channel data is put one after another. All data is clocked in with MSB first. Figure 8 shows the On/Off data format.

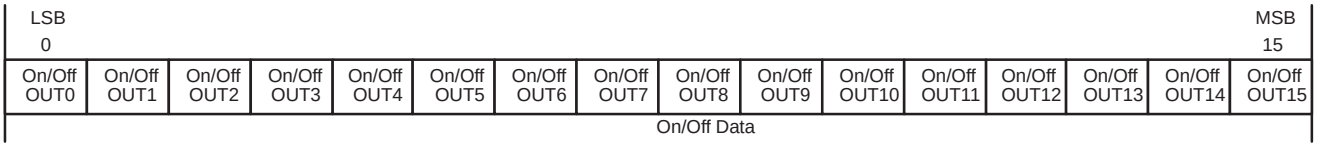

Figure 8. On/Off Data

MODE must be set to low to input On/Off data into the On/Off register. The internal input shift register is then set to 16-bit width. After all serial data is clocked in, a rising edge of XLAT, during BLANK = high, is used to latch data into the On/Off register. Figure 10 shows the On/Off data input timing chart.

Delay Between Outputs

The TLC5922 has graduated delay circuits between outputs. These delay circuits can be found in the constant current block of the device (see Figure 1). The fixed delay time is 20 ns (typical), OUT0 has no delay, OUT1 has 20-ns delay, OUT2 has 40-ns delay, etc. This delay prevents large inrush currents, which reduce power supply bypass capacitor requirements when the outputs turn on.

Copyright © 2003–2009, Texas Instruments Incorporated

Serial Interface Data Transfer Rate

The TLC5922 includes a flexible serial interface, which can be connected to a microcontroller or digital signal processor. Only 3 pins are required to input data into the device. The rising edge of SCLK signal shifts the data from SIN pin to internal shift register. After all data is clocked in, a rising edge of XLAT latches the serial data to the internal registers. All data is clocked in with MSB first. Multiple TLC5922 devices can be cascaded by connecting SOUT pin of one device to the SIN pin of following device.

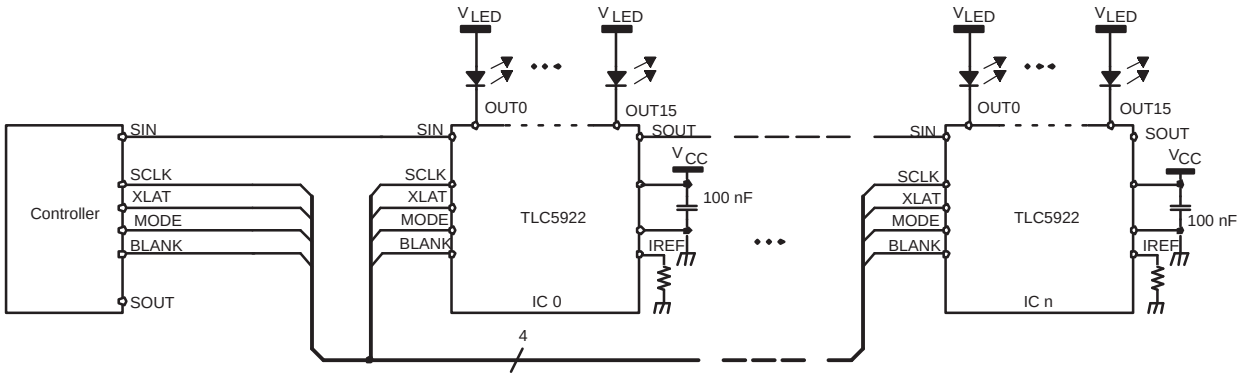

Figure 9. Cascading Devices

Figure 9 shows an example application with *n* cascaded TLC5922 devices connected to a controller. The maximum number of cascaded TLC5922 devices depends on the application system, and data transfer rate. Equation 3 calculates the minimum data input frequency needed.

$$f_(SCLK) = 112 \times f_(update) \times n \tag{3}$$

where:

f_(SCLK): The minimum data input frequency for SCLK and SIN.

f_(update): The update rate of the whole cascaded system.

n: The number of cascaded TLC5922 devices.

Operating Modes

The TLC5922 has different operating modes, depending on the MODE signal. Table 2 shows the available operating modes.

Table 2. TLC5922 Operating Modes Truth Table

MODE SIGNAL	INPUT SHIFT REGISTER	MODE
LOW	16 bit	On/Off Mode
HIGH	112 bit	Dot-Correction Data Input Mode

Copyright © 2003–2009, Texas Instruments Incorporated

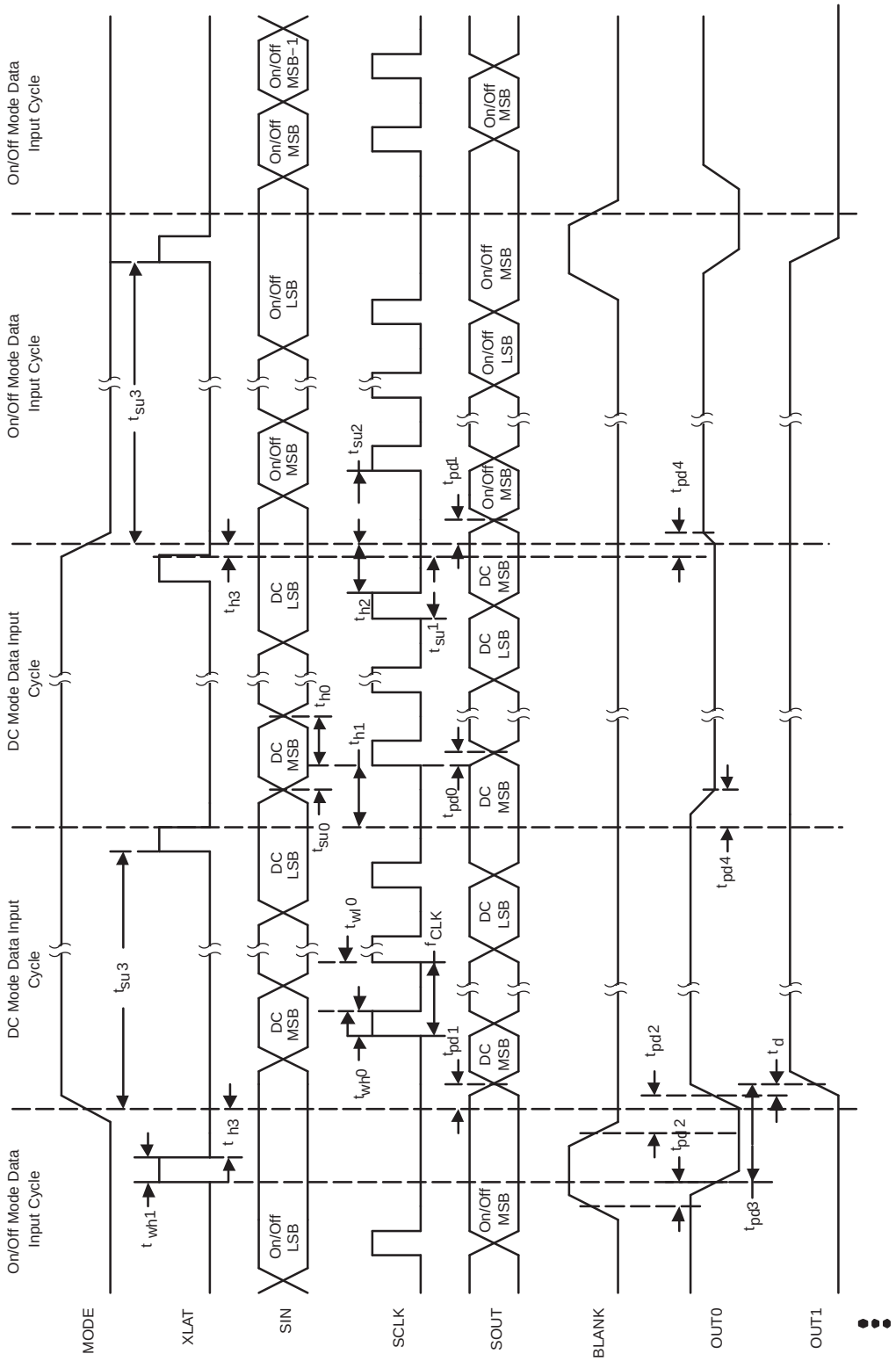

Figure 10. Timing Chart Example for ON/OFF Setting to Dot-Correction

Copyright © 2003–2009, Texas Instruments Incorporated

Power Rating - Free-Air Temperature

Figure 11 shows total power dissipation. Figure 12 shows supply current versus free-air temperature.

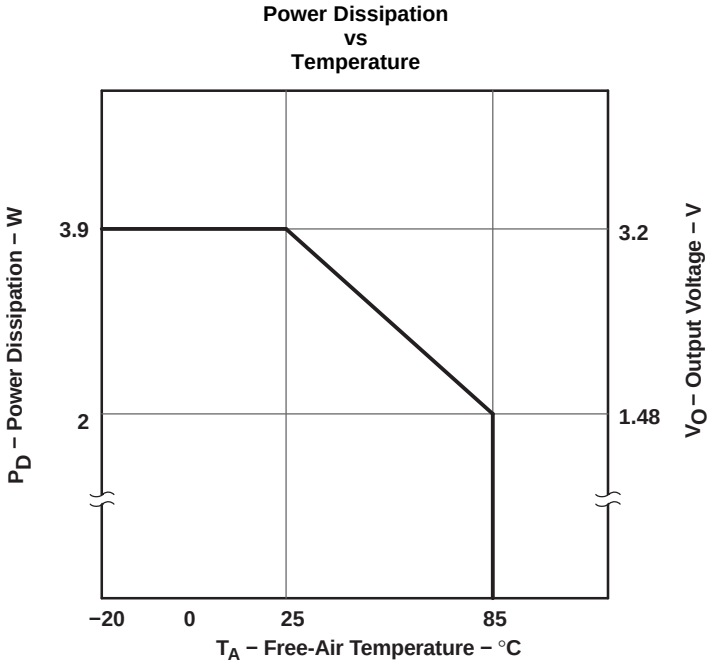

Figure 11.

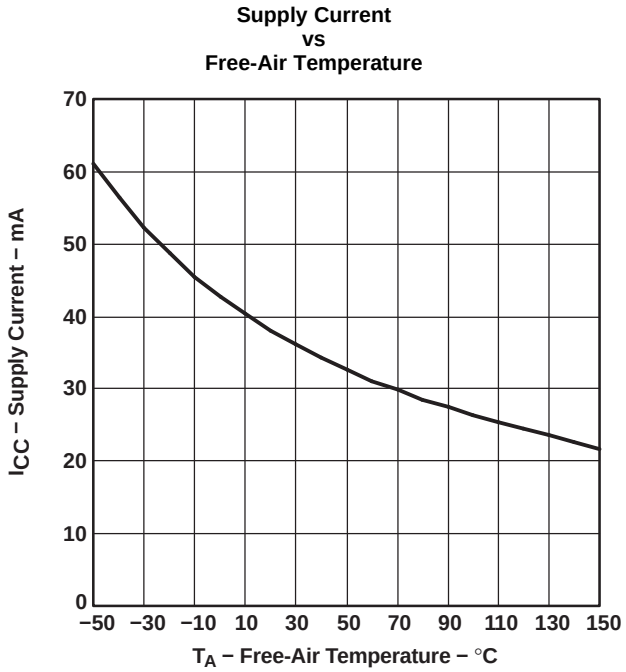

Data Transfer = 30 MHz / All Outputs, ON/VO = 1 V / RIREF = 600 Ω / AVDD = 5 V

Figure 12.

REVISION HISTORY

NOTE: Page numbers of current version may differ from previous versions.

Changes from Revision A (March 2005) to Revision B	Page
• Changed Propogation delay time t_{PD0} and t_{PD1} from 300 ns MAX(typographical error) to 30 ns MAX	4

Copyright © 2003–2009, Texas Instruments Incorporated

THERMAL INFORMATION

The DAP PowerPAD™ package incorporates an exposed thermal die pad that is designed to be attached directly to an external heat sink. When the thermal die pad is soldered directly to the printed circuit board (PCB), the PCB can be used as a heatsink. In addition, through the use of thermal vias, the thermal die pad can be attached directly to a ground plane or special heat sink structure designed into the PCB. This design optimizes the heat transfer from the integrated circuit (IC).

For additional information on the PowerPAD package and how to take advantage of its heat dissipating abilities, refer to Technical Brief, *PowerPAD Thermally Enhanced Package*, Texas Instruments Literature No. SLMA002 and Application Brief, *PowerPAD Made Easy*, Texas Instruments Literature No. SLMA004. Both documents are available at www.ti.com. See Figure 1 for DAP package exposed thermal die pad dimensions.

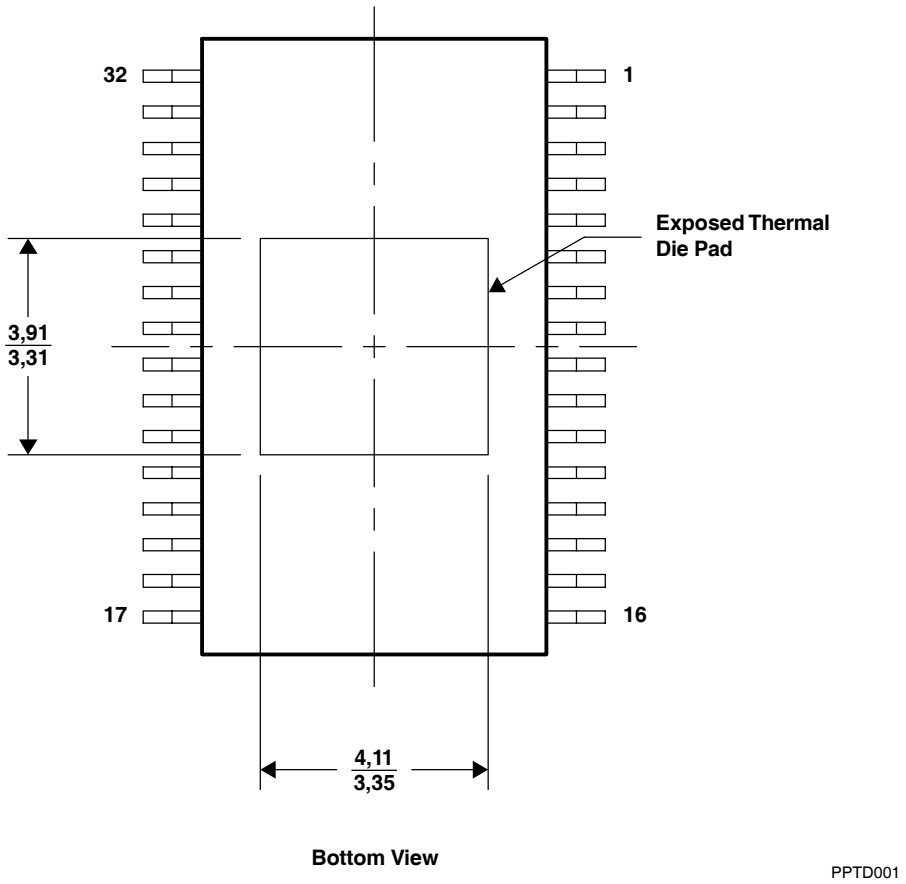

NOTE: All linear dimensions are in millimeters.

Figure 1. DAP Package Exposed Thermal Die Pad Dimensions

PowerPAD is a trademark of Texas Instruments.

PACKAGING INFORMATION

Orderable part number	Status (1)	Material type (2)	Package | Pins	Package qty | Carrier	RoHS (3)	Lead finish/ Ball material (4)	MSL rating/ Peak reflow (5)	Op temp (°C)	Part marking (6)
TLC5922DAP	Active	Production	HTSSOP (DAP) | 32	46 | TUBE	Yes	NIPDAU	Level-3-260C-168 HR	-20 to 85	TLC5922
TLC5922DAP.A	Active	Production	HTSSOP (DAP) | 32	46 | TUBE	Yes	NIPDAU	Level-3-260C-168 HR	-20 to 85	TLC5922
TLC5922DAP.B	Active	Production	HTSSOP (DAP) | 32	46 | TUBE	Yes	NIPDAU	Level-3-260C-168 HR	-20 to 85	TLC5922
TLC5922DAPG4	Active	Production	HTSSOP (DAP) | 32	46 | TUBE	Yes	NIPDAU	Level-3-260C-168 HR	-20 to 85	TLC5922
TLC5922DAPR	Active	Production	HTSSOP (DAP) | 32	2000 | LARGE T&R	Yes	NIPDAU	Level-3-260C-168 HR	-20 to 85	TLC5922
TLC5922DAPR.A	Active	Production	HTSSOP (DAP) | 32	2000 | LARGE T&R	Yes	NIPDAU	Level-3-260C-168 HR	-20 to 85	TLC5922
TLC5922DAPR.B	Active	Production	HTSSOP (DAP) | 32	2000 | LARGE T&R	Yes	NIPDAU	Level-3-260C-168 HR	-20 to 85	TLC5922
TLC5922DAPRG4	Active	Production	HTSSOP (DAP) | 32	2000 | LARGE T&R	Yes	NIPDAU	Level-3-260C-168 HR	-20 to 85	TLC5922

(1) **Status:** For more details on status, see our product life cycle.

(2) **Material type:** When designated, preproduction parts are prototypes/experimental devices, and are not yet approved or released for full production. Testing and final process, including without limitation quality assurance, reliability performance testing, and/or process qualification, may not yet be complete, and this item is subject to further changes or possible discontinuation. If available for ordering, purchases will be subject to an additional waiver at checkout, and are intended for early internal evaluation purposes only. These items are sold without warranties of any kind.

(3) **RoHS values:** Yes, No, RoHS Exempt. See the TI RoHS Statement for additional information and value definition.

(4) **Lead finish/Ball material:** Parts may have multiple material finish options. Finish options are separated by a vertical ruled line. Lead finish/Ball material values may wrap to two lines if the finish value exceeds the maximum column width.

(5) **MSL rating/Peak reflow:** The moisture sensitivity level ratings and peak solder (reflow) temperatures. In the event that a part has multiple moisture sensitivity ratings, only the lowest level per JEDEC standards is shown. Refer to the shipping label for the actual reflow temperature that will be used to mount the part to the printed circuit board.

(6) **Part marking:** There may be an additional marking, which relates to the logo, the lot trace code information, or the environmental category of the part.

Multiple part markings will be inside parentheses. Only one part marking contained in parentheses and separated by a "~" will appear on a part. If a line is indented then it is a continuation of the previous line and the two combined represent the entire part marking for that device.

Important Information and Disclaimer: The information provided on this page represents TI's knowledge and belief as of the date that it is provided. TI bases its knowledge and belief on information provided by third parties, and makes no representation or warranty as to the accuracy of such information. Efforts are underway to better integrate information from third parties. TI has taken and continues to take reasonable steps to provide representative and accurate information but may not have conducted destructive testing or chemical analysis on incoming materials and chemicals. TI and TI suppliers consider certain information to be proprietary, and thus CAS numbers and other limited information may not be available for release.

In no event shall TI's liability arising out of such information exceed the total purchase price of the TI part(s) at issue in this document sold by TI to Customer on an annual basis.

TAPE AND REEL INFORMATION

REEL DIMENSIONS

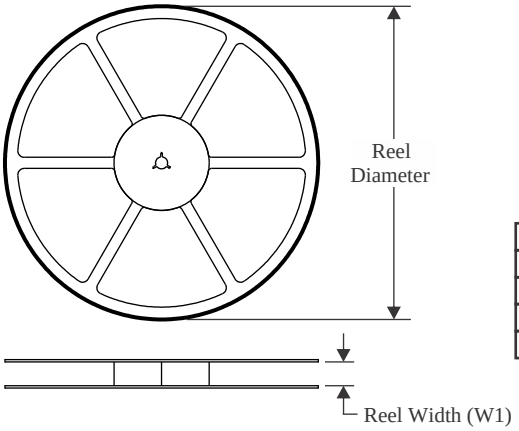

TAPE DIMENSIONS

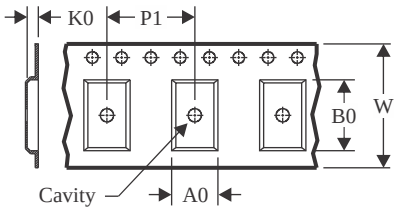

A0	Dimension designed to accommodate the component width
B0	Dimension designed to accommodate the component length
K0	Dimension designed to accommodate the component thickness
W	Overall width of the carrier tape
P1	Pitch between successive cavity centers

QUADRANT ASSIGNMENTS FOR PIN 1 ORIENTATION IN TAPE

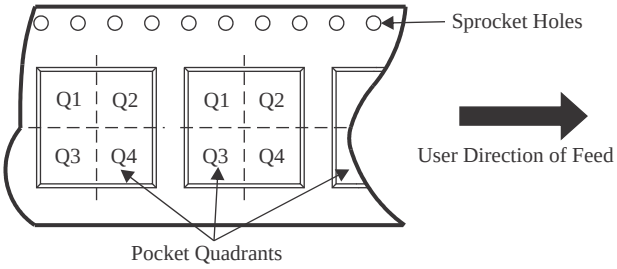

*All dimensions are nominal

Device	Package Type	Package Drawing	Pins	SPQ	Reel Diameter (mm)	Reel Width W1 (mm)	A0 (mm)	B0 (mm)	K0 (mm)	P1 (mm)	W (mm)	Pin1 Quadrant
TLC5922DAPR	HTSSOP	DAP	32	2000	330.0	24.4	8.6	11.5	1.6	12.0	24.0	Q1

TAPE AND REEL BOX DIMENSIONS

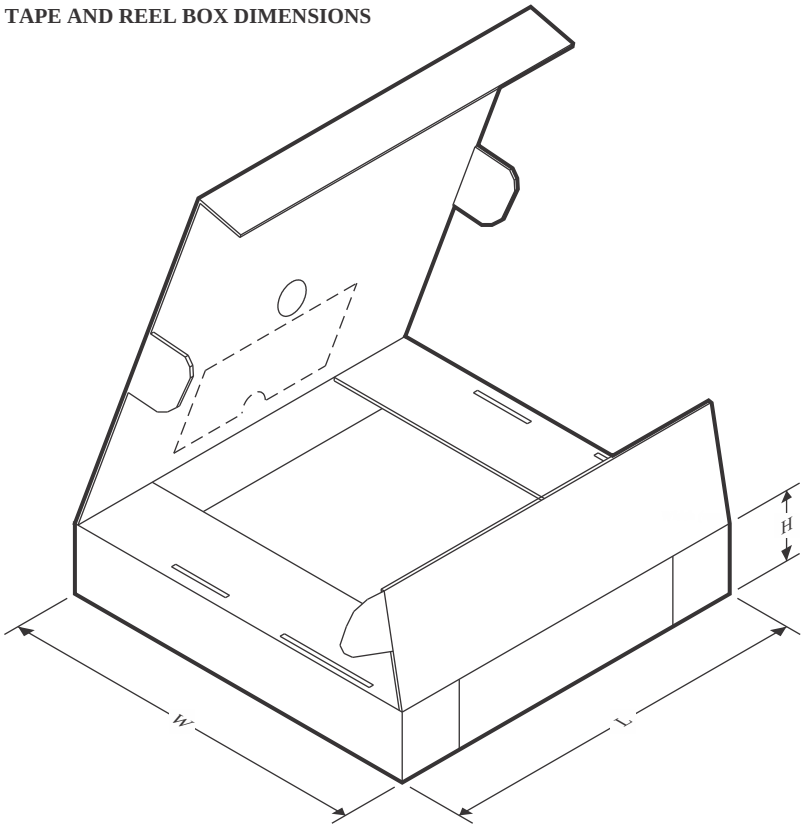

*All dimensions are nominal

Device	Package Type	Package Drawing	Pins	SPQ	Length (mm)	Width (mm)	Height (mm)
TLC5922DAPR	HTSSOP	DAP	32	2000	350.0	350.0	43.0

TUBE

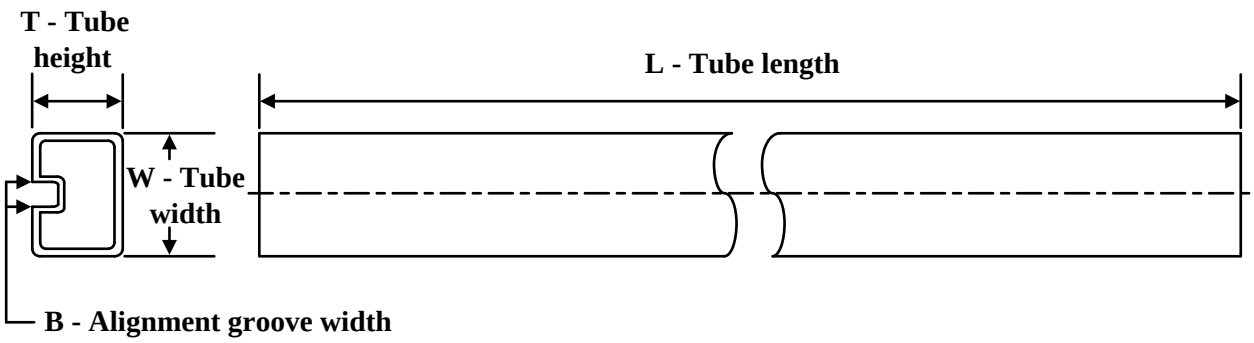

*All dimensions are nominal

Device	Package Name	Package Type	Pins	SPQ	L (mm)	W (mm)	T (µm)	B (mm)
TLC5922DAP	DAP	HTSSOP	32	46	530	11.89	3600	4.9
TLC5922DAP.A	DAP	HTSSOP	32	46	530	11.89	3600	4.9
TLC5922DAP.B	DAP	HTSSOP	32	46	530	11.89	3600	4.9
TLC5922DAPG4	DAP	HTSSOP	32	46	530	11.89	3600	4.9

GENERIC PACKAGE VIEW

DAP 32

PowerPAD™ TSSOP - 1.2 mm max height

8.1 x 11, 0.65 mm pitch

PLASTIC SMALL OUTLINE

This image is a representation of the package family, actual package may vary.
Refer to the product data sheet for package details.

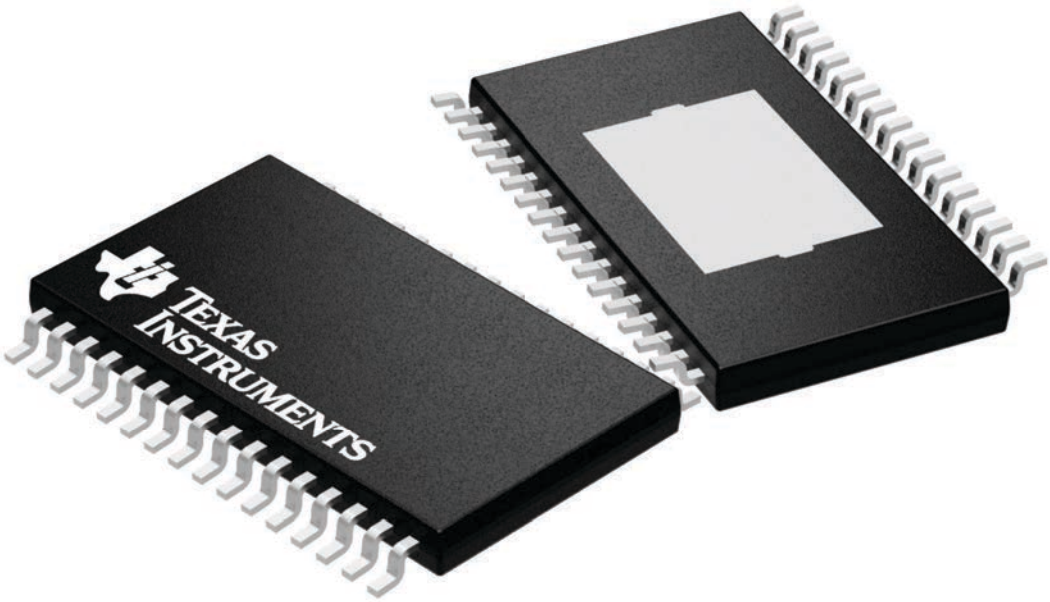

4225303/A

DAP (R-PDSO-G32) PowerPAD™ PLASTIC SMALL-OUTLINE PACKAGE

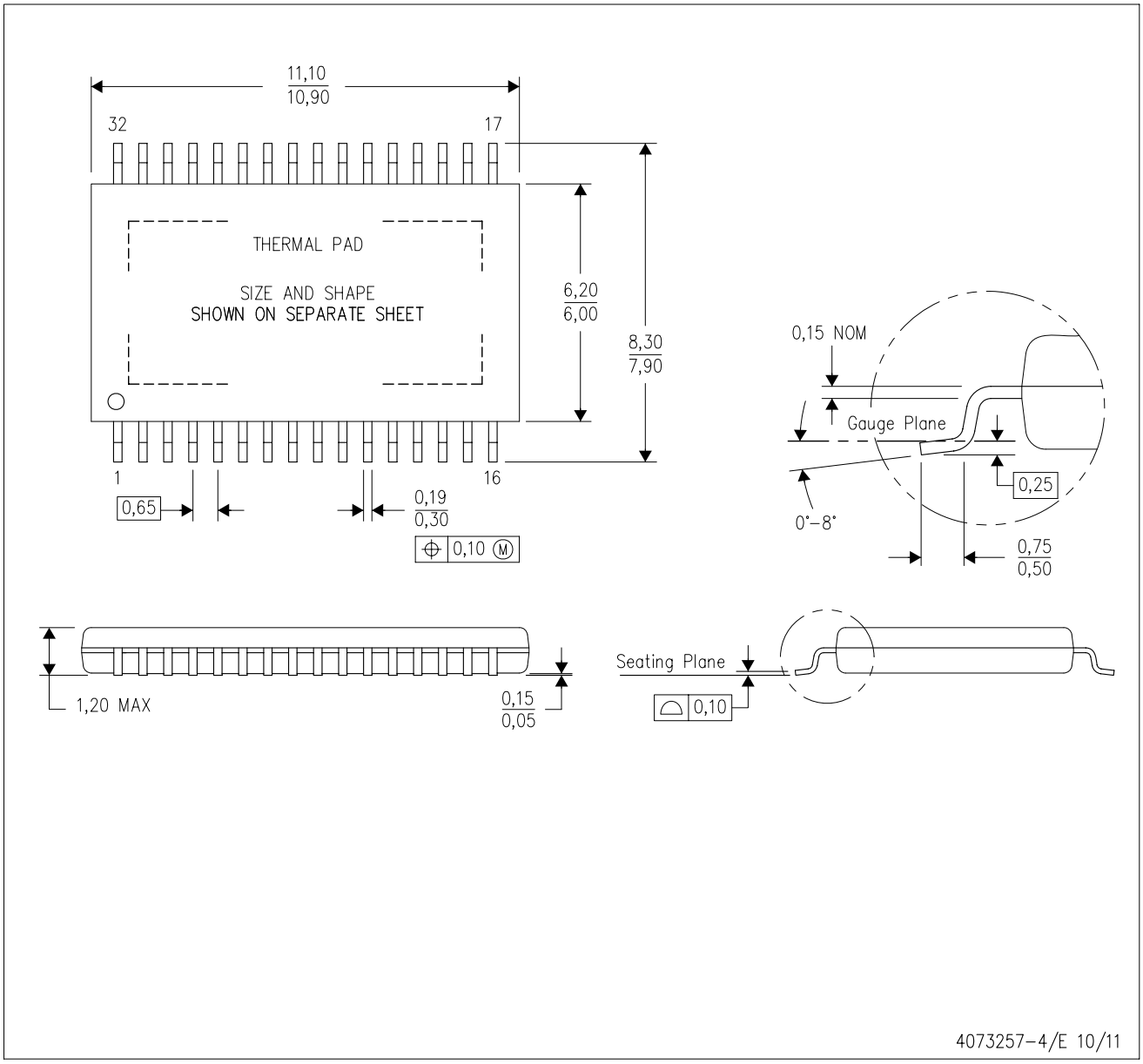

NOTES:
- A. All linear dimensions are in millimeters.
- B. This drawing is subject to change without notice.
- C. Body dimensions do not include mold flash or protrusion. Mold flash and protrusion shall not exceed 0.15 per side.
- D. This package is designed to be soldered to a thermal pad on the board. Refer to Technical Brief, PowerPad Thermally Enhanced Package, Texas Instruments Literature No. SLMA002 for information regarding recommended board layout. This document is available at www.ti.com <http://www.ti.com>.
- F. Falls within JEDEC MO-153 Variation DCT.

PowerPAD is a trademark of Texas Instruments.

DAP (R–PDSO–G32) PowerPAD™ PLASTIC SMALL OUTLINE

THERMAL INFORMATION

This PowerPAD™ package incorporates an exposed thermal pad that is designed to be attached to a printed circuit board (PCB). The thermal pad must be soldered directly to the PCB. After soldering, the PCB can be used as a heatsink. In addition, through the use of thermal vias, the thermal pad can be attached directly to the appropriate copper plane shown in the electrical schematic for the device, or alternatively, can be attached to a special heatsink structure designed into the PCB. This design optimizes the heat transfer from the integrated circuit (IC).

For additional information on the PowerPAD package and how to take advantage of its heat dissipating abilities, refer to Technical Brief, PowerPAD Thermally Enhanced Package, Texas Instruments Literature No. SLMA002 and Application Brief, PowerPAD Made Easy, Texas Instruments Literature No. SLMA004. Both documents are available at www.ti.com.

The exposed thermal pad dimensions for this package are shown in the following illustration.

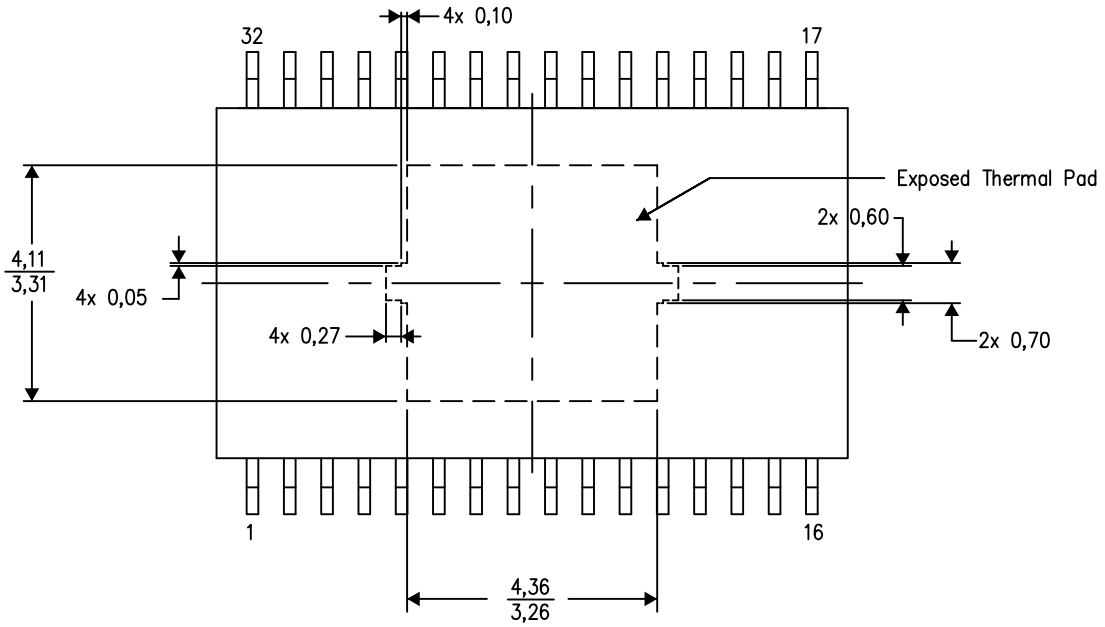

Top View

Exposed Thermal Pad Dimensions

4206319–3/M 09/13

NOTE: All linear dimensions are in millimeters

PowerPAD is a trademark of Texas Instruments.

DAP (R–PDSO–G32) PowerPAD™ PLASTIC SMALL OUTLINE PACKAGE

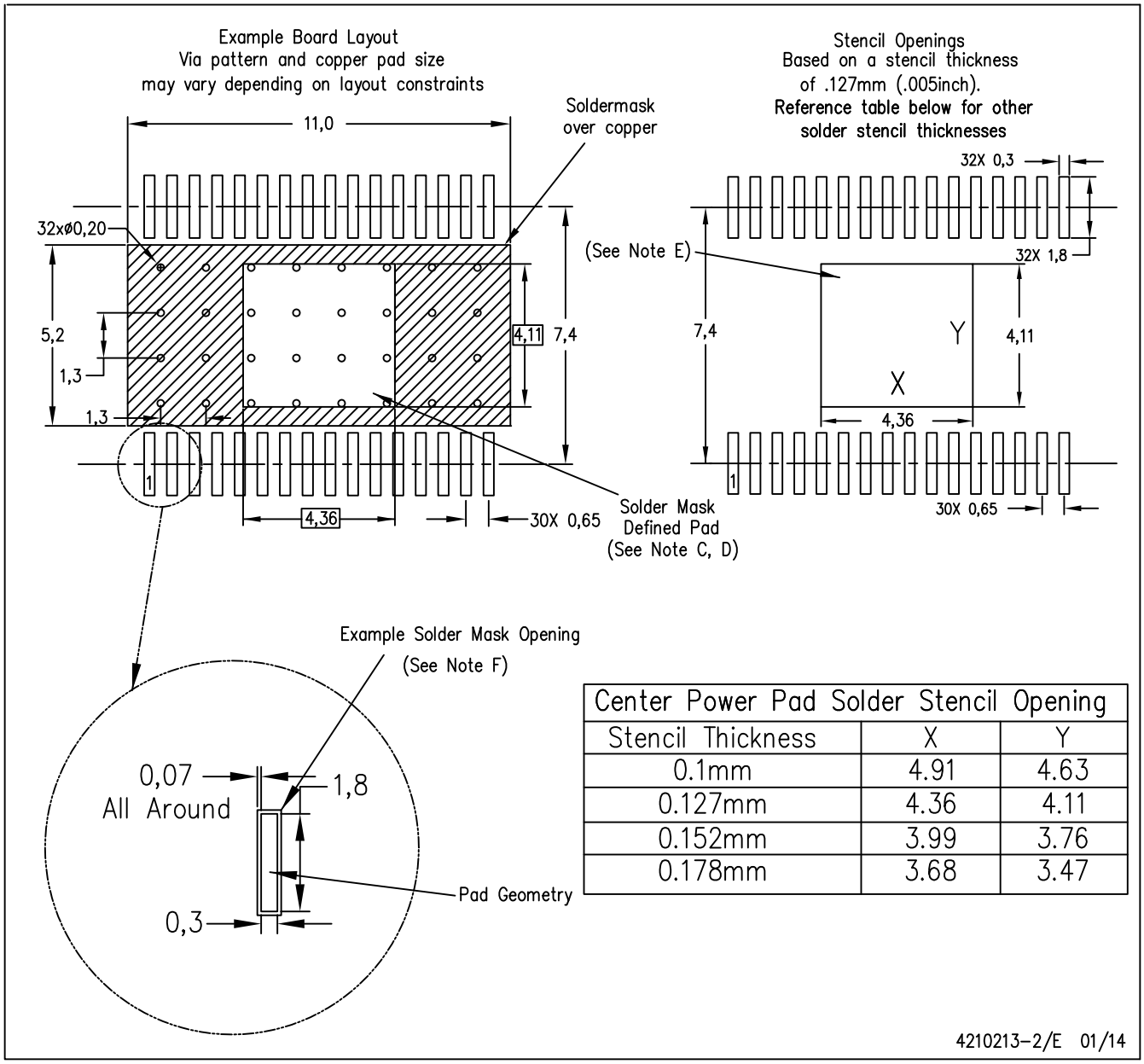

Center Power Pad Solder Stencil Opening		
Stencil Thickness	X	Y
0.1mm	4.91	4.63
0.127mm	4.36	4.11
0.152mm	3.99	3.76
0.178mm	3.68	3.47

NOTES:
- A. All linear dimensions are in millimeters.
- B. This drawing is subject to change without notice.
- C. Customers should place a note on the circuit board fabrication drawing not to alter the center solder mask defined pad.
- D. This package is designed to be soldered to a thermal pad on the board. Refer to Technical Brief, PowerPad Thermally Enhanced Package, Texas Instruments Literature No. SLMA002, SLMA004, and also the Product Data Sheets for specific thermal information, via requirements, and recommended board layout. These documents are available at www.ti.com <http://www.ti.com>. Publication IPC–7351 is recommended for alternate designs.
- E. Laser cutting apertures with trapezoidal walls and also rounding corners will offer better paste release. Customers should contact their board assembly site for stencil design recommendations. Refer to IPC–7525 for other stencil recommendations.
- F. Contact the board fabrication site for recommended soldermask tolerances.

PowerPAD is a trademark of Texas Instruments

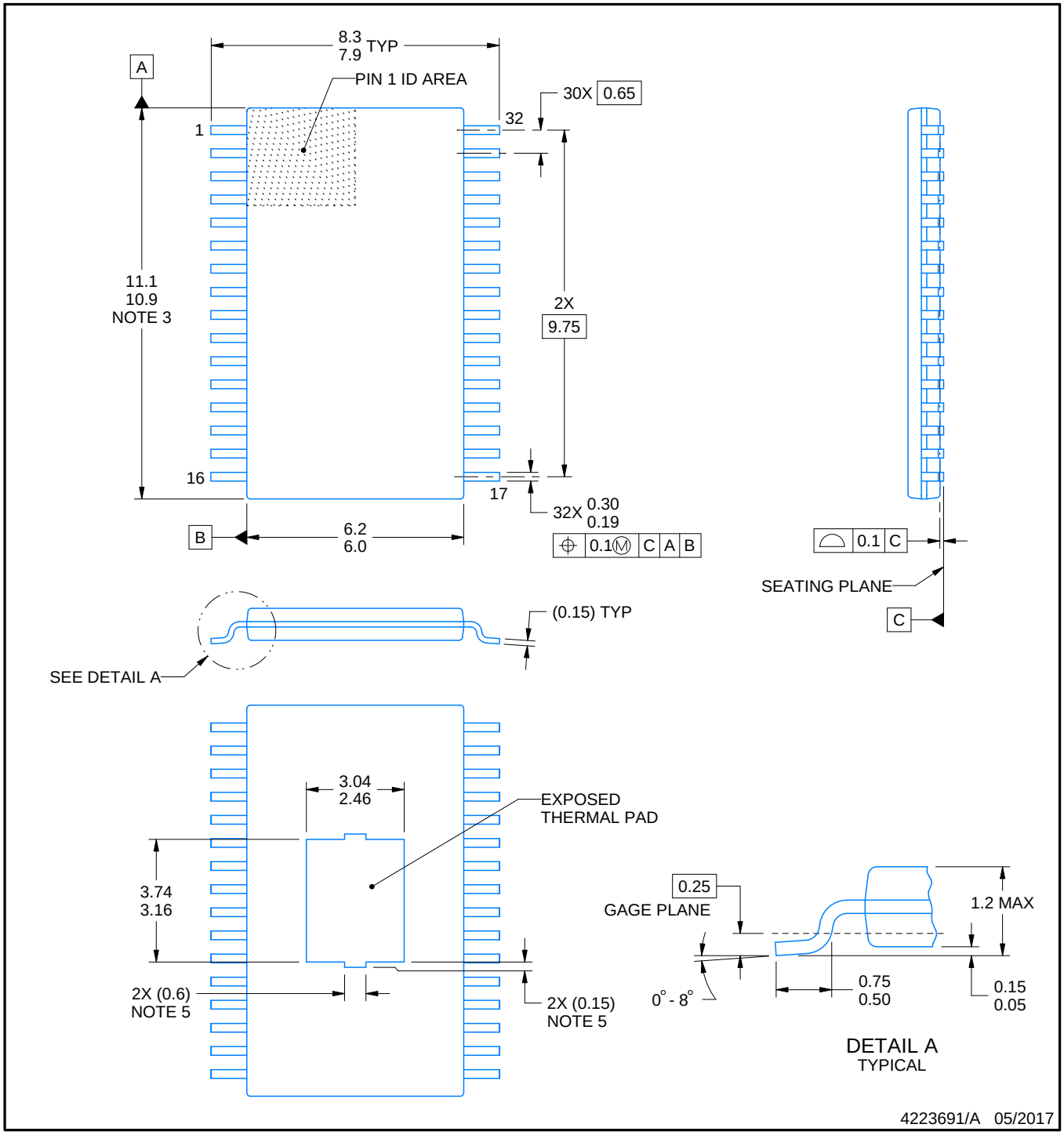

PowerPAD is a trademark of Texas Instruments.

NOTES:

1. All linear dimensions are in millimeters. Any dimensions in parenthesis are for reference only. Dimensioning and tolerancing per ASME Y14.5M.
2. This drawing is subject to change without notice.
3. This dimension does not include mold flash, protrusions, or gate burrs. Mold flash, protrusions, or gate burrs shall not exceed 0.15 mm per side.
4. Reference JEDEC registration MO-153.
5. Features may differ and may not be present.

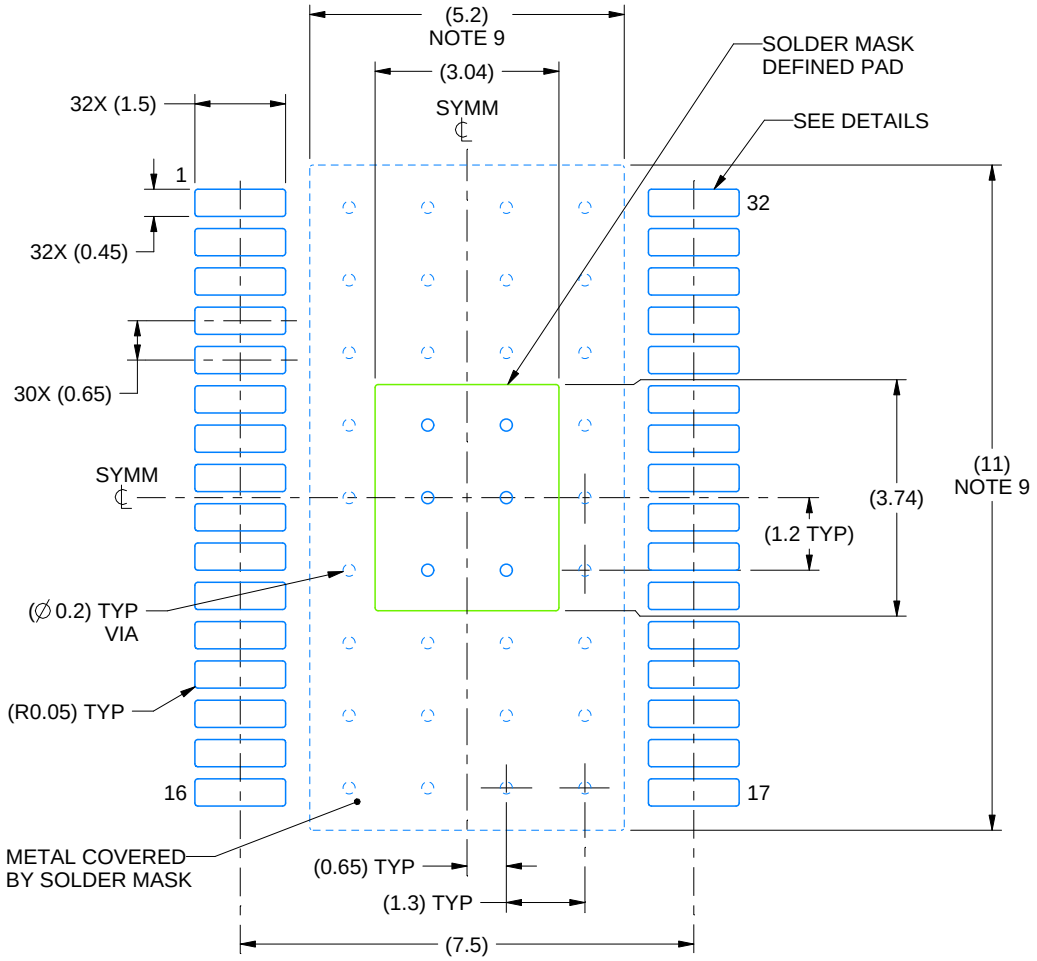

LAND PATTERN EXAMPLE
EXPOSED METAL SHOWN
SCALE:8X

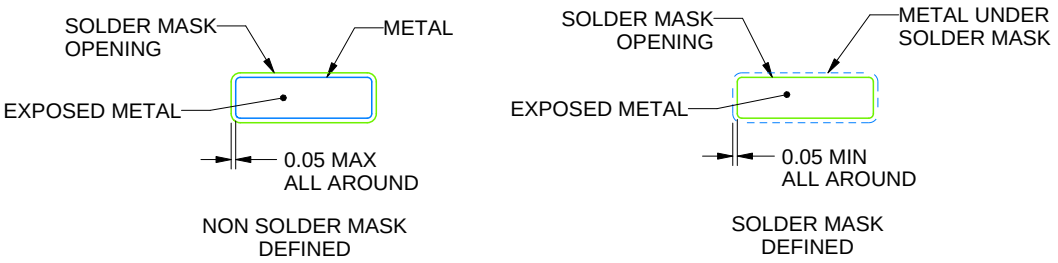

SOLDER MASK DETAILS
NOT TO SCALE

4223691/A 05/2017

NOTES: (continued)

6. Publication IPC-7351 may have alternate designs.
7. Solder mask tolerances between and around signal pads can vary based on board fabrication site.
8. This package is designed to be soldered to a thermal pad on the board. For more information, see Texas Instruments literature numbers SLMA002 (www.ti.com/lit/slma002) and SLMA004 (www.ti.com/lit/slma004).
9. Size of metal pad may vary due to creepage requirement.

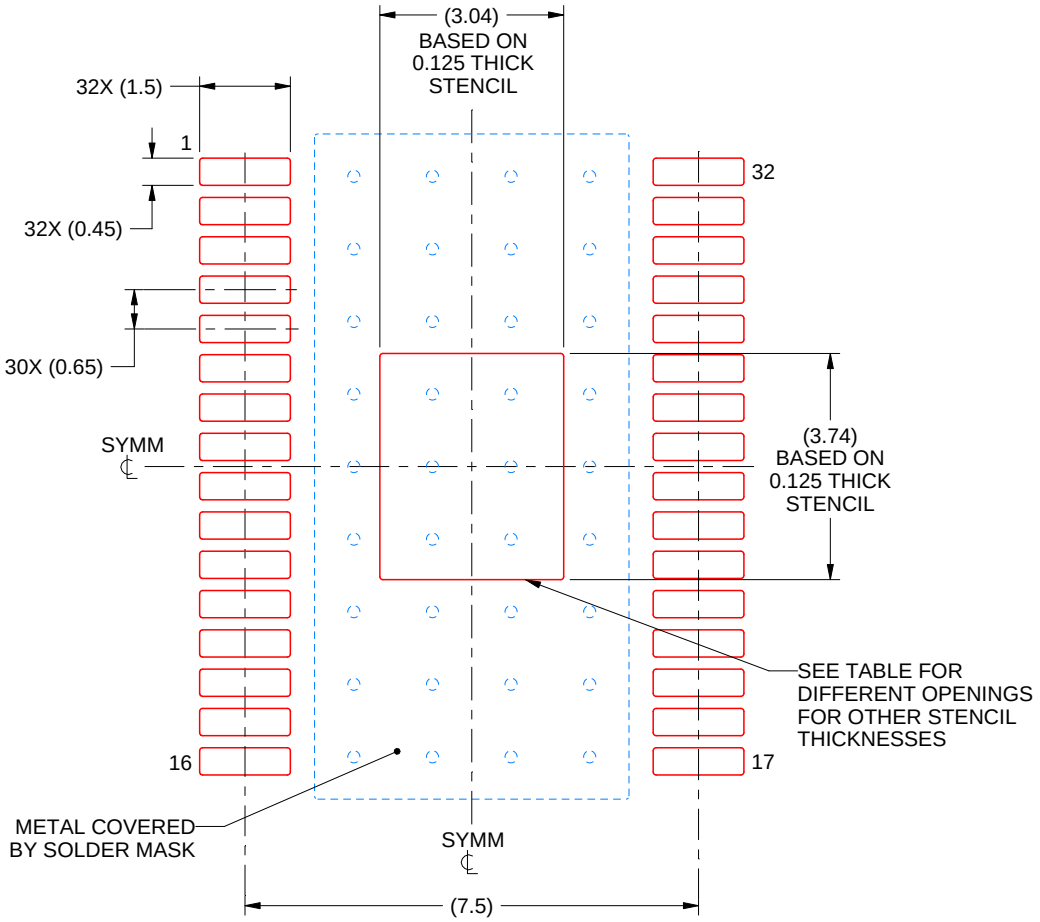

SOLDER PASTE EXAMPLE
EXPOSED PAD
100% PRINTED SOLDER COVERAGE BY AREA
SCALE:8X

STENCIL THICKNESS	SOLDER STENCIL OPENING
0.1	3.40 X 4.18
0.125	3.04 X 3.74 (SHOWN)
0.15	2.78 X 3.41
0.175	2.57 X 3.16

4223691/A 05/2017

NOTES: (continued)

10. Laser cutting apertures with trapezoidal walls and rounded corners may offer better paste release. IPC-7525 may have alternate design recommendations.
11. Board assembly site may have different recommendations for stencil design.

IMPORTANT NOTICE AND DISCLAIMER

TI PROVIDES TECHNICAL AND RELIABILITY DATA (INCLUDING DATA SHEETS), DESIGN RESOURCES (INCLUDING REFERENCE DESIGNS), APPLICATION OR OTHER DESIGN ADVICE, WEB TOOLS, SAFETY INFORMATION, AND OTHER RESOURCES “AS IS” AND WITH ALL FAULTS, AND DISCLAIMS ALL WARRANTIES, EXPRESS AND IMPLIED, INCLUDING WITHOUT LIMITATION ANY IMPLIED WARRANTIES OF MERCHANTABILITY, FITNESS FOR A PARTICULAR PURPOSE OR NON-INFRINGEMENT OF THIRD PARTY INTELLECTUAL PROPERTY RIGHTS.

These resources are intended for skilled developers designing with TI products. You are solely responsible for (1) selecting the appropriate TI products for your application, (2) designing, validating and testing your application, and (3) ensuring your application meets applicable standards, and any other safety, security, regulatory or other requirements.

These resources are subject to change without notice. TI grants you permission to use these resources only for development of an application that uses the TI products described in the resource. Other reproduction and display of these resources is prohibited. No license is granted to any other TI intellectual property right or to any third party intellectual property right. TI disclaims responsibility for, and you will fully indemnify TI and its representatives against, any claims, damages, costs, losses, and liabilities arising out of your use of these resources.

TI’s products are provided subject to TI’s Terms of Sale or other applicable terms available either on ti.com or provided in conjunction with such TI products. TI’s provision of these resources does not expand or otherwise alter TI’s applicable warranties or warranty disclaimers for TI products.

TI objects to and rejects any additional or different terms you may have proposed.

Mailing Address: Texas Instruments, Post Office Box 655303, Dallas, Texas 75265
Copyright © 2025, Texas Instruments Incorporated