TMUX110x 5V, Low-Leakage-Current, 1:1 (SPST) Precision Switch

1 Features

- Wide supply range: 1.08V to 5.5V
- Low leakage current: 3pA
- Low charge injection: –1.5pC
- Low on-resistance: 1.8Ω
- –40°C to +125°C operating temperature
- 1.8V logic compatible
- Fail-safe logic
- Rail to rail operation
- Bidirectional signal path
- Break-before-make switching
- ESD protection HBM: 2000V

2 Applications

- Sample-and-hold circuits
- Feedback gain switching
- Signal isolation
- Field transmitters
- Programmable logic controllers (PLC)
- Factory automation and control
- Ultrasound scanners
- Patient monitoring and diagnostics
- Electrocardiogram (ECG)
- Data acquisition systems (DAQ)
- Semiconductor test equipment
- Battery test equipment
- Instrumentation: lab, analytical, portable
- Ultrasonic smart meters: water and gas
- Optical networking
- Optical test equipment

3 Description

The TMUX1101 and TMUX1102 are precision complementary metal-oxide semiconductor (CMOS) single-pole, single-throw (SPST) switches. A wide operating supply of 1.08V to 5.5V makes these devices an excellent choice for a broad array of applications from medical equipment to industrial systems. The devices support bidirectional analog and digital signals on the source (S) and drain (D) pins ranging from GND to V_{DD}.

The logic control input (SEL) has 1.8V logic compatible thresholds, ensuring both TTL and CMOS logic compatibility when operating within the valid supply voltage range. The switch of the TMUX1101 is turned on when SEL is Logic 1, while TMUX1102 is turned on when SEL is Logic 0. Fail-Safe Logic circuitry allows voltages on the SEL pin to be applied before the supply pin, protecting the device from potential damage.

The TMUX110x devices are part of the precision switches and multiplexers family. These devices have very low on and off leakage currents and low charge injection, allowing them to be used in high precision measurement applications. A low supply current of 3nA and small package options enable use in portable applications.

Device Information

PART NUMBER	CONTROL LOGIC(1)	PACKAGE(2)
TMUX1101 TMUX1102	Active High	DCK (SC70, 5)
	Active Low	DBV (SOT-23, 5)

(1) See Device Comparison.
(2) For more information see Section 12.

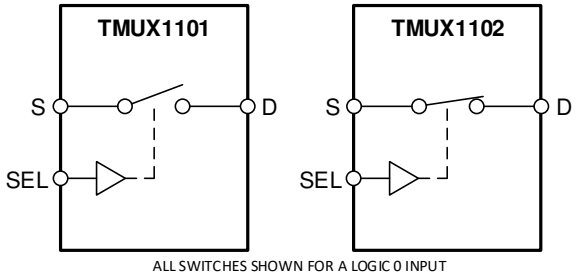

TMUX110x Block Diagrams

An IMPORTANT NOTICE at the end of this data sheet addresses availability, warranty, changes, use in safety-critical applications, intellectual property matters and other important disclaimers. PRODUCTION DATA.

Table of Contents

1 Features....1
2 Applications....1
3 Description....1
4 Device Comparison Table....2
5 Pin Configuration and Functions....3
6 Specifications....4
6.1 Absolute Maximum Ratings....4
6.2 ESD Ratings....4
6.3 Recommended Operating Conditions....4
6.4 Thermal Information....5
6.5 Electrical Characteristics (V_{DD} = 5V ±10 %)....5
6.6 Electrical Characteristics (V_{DD} = 3.3V ±10 %)....6
6.7 Electrical Characteristics (V_{DD} = 1.8V ±10 %)....7
6.8 Electrical Characteristics (V_{DD} = 1.2V ±10 %)....8
6.9 Typical Characteristics....10
7 Parameter Measurement Information....13
7.1 On-Resistance....13
7.2 Off-Leakage Current....13
7.3 On-Leakage Current....14
7.4 Transition Time....14
7.5 Charge Injection....15
7.6 Off Isolation....15
7.7 Bandwidth....16
8 Detailed Description....17
8.1 Overview....17
8.2 Functional Block Diagram....17
8.3 Feature Description....17
8.4 Device Functional Modes....19
9 Application and Implementation....20
9.1 Application Information....20
9.2 Typical Application - Sample-and-Hold Circuit....20
9.3 Typical Application - Switched Gain Amplifier....22
9.4 Power Supply Recommendations....24
9.5 Layout....24
10 Device and Documentation Support....26
10.1 Documentation Support....26
10.2 Receiving Notification of Documentation Updates....26
10.3 Support Resources....26
10.4 Trademarks....26
10.5 Electrostatic Discharge Caution....26
10.6 Glossary....26
11 Revision History....26
12 Mechanical, Packaging, and Orderable Information....27

4 Device Comparison Table

PRODUCT	DESCRIPTION
TMUX1101	Low-Leakage-Current, 1:1 (SPST), Precision Switch (Logic High)
TMUX1102	Low-Leakage-Current, 1:1 (SPST), Precision Switch (Logic Low)

Copyright © 2024 Texas Instruments Incorporated

5 Pin Configuration and Functions

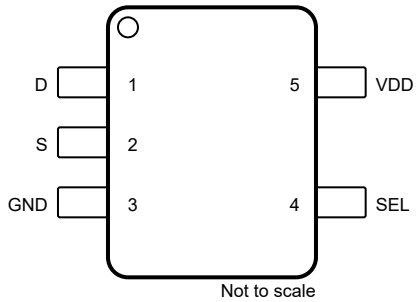

Figure 5-1. DCK Package 5-Pin SC70 (Top View)

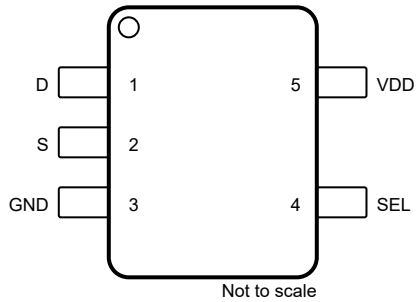

Figure 5-2. DBV Package 5-Pin SOT-23 (Top View)

Table 5-1. Pin Functions

PIN		TYPE[1]	DESCRIPTION[2]
NAME	NO.		
D	1	I/O	Drain pin. Can be an input or output.
S	2	I/O	Source pin. Can be an input or output.
GND	3	P	Ground (0V) reference
SEL	4	I	Logic control input. Controls the switch state as shown in Section 8.4.1.
VDD	5	P	Positive power supply. This pin is the most positive power-supply potential. For reliable operation, connect a decoupling capacitor ranging from 0.1µF to 10µF between V_{DD} and GND.

(1) I = input, O = output, I/O = input and output, and P = power.
(2) Refer to Section 8.4 for what to do with unused pins.

Copyright © 2024 Texas Instruments Incorporated

6 Specifications

6.1 Absolute Maximum Ratings

over operating free-air temperature range (unless otherwise noted) [(1) (2) (3)]

		MIN	MAX	UNIT
V_{DD}	Supply voltage	–0.5	6	V
V_{SEL}	Logic control input pin voltage (SELx)	–0.5	6	V
I_{SEL}	Logic control input pin current (SELx)	–30	30	mA
V_S or V_D	Source or drain voltage (Sx, Dx)	–0.5	V_{DD}+0.5	V
I_S or $I_{D\ (CONT)}$	Source or drain continuous current (Sx, Dx)	I_{DC} ± 10 %[(4)]	I_{DC} ± 10 %[(4)]	mA
I_S or $I_{D\ (PEAK)}$	Source and drain peak current: (1 ms period max, 10% duty cycle maximum) (Sx, Dx)	I_{peak} ± 10 %[(4)]	I_{peak} ± 10 %[(4)]	mA
T_{stg}	Storage temperature	–65	150	°C
P_{tot}	Total power dissipation[(5) (6)]		250	mW
T_J	Junction temperature		150	°C

(1) Stresses beyond those listed under *Absolute Maximum Rating* may cause permanent damage to the device. These are stress ratings only, which do not imply functional operation of the device at these or any other conditions beyond those indicated under *Recommended Operating Condition*. Exposure to absolute-maximum-rated conditions for extended periods may affect device reliability.
(2) The algebraic convention, whereby the most negative value is a minimum and the most positive value is a maximum.
(3) All voltages are with respect to ground, unless otherwise specified.
(4) Refer to Recommended Operating Conditions for I_{DC} and I_{Peak} ratings.
(5) For DBV(SOT-23) package: P_{tot} derates linearly above TA = 93°C by 4.45mW/°C.
(6) For DCK(SC70) package: P_{tot} derates linearly above TA = 62°C by 2.87mW/°C.

6.2 ESD Ratings

			VALUE	UNIT
$V_{(ESD)}$	Electrostatic discharge	Human body model (HBM), per ANSI/ESDA/JEDEC JS-001, all pins[(1)]	±2000	V
		Charged device model (CDM), per JEDEC specification JESD22-C101 or ANSI/ESDA/JEDEC JS-002, all pins[(2)]	±750	

(1) JEDEC document JEP155 states that 500-V HBM allows safe manufacturing with a standard ESD control process.
(2) JEDEC document JEP157 states that 250-V CDM allows safe manufacturing with a standard ESD control process.

6.3 Recommended Operating Conditions

over operating free-air temperature range (unless otherwise noted)

			MIN	NOM	MAX	UNIT
V_{DD}	Supply voltage		1.08		5.5	V
V_S or V_D	Signal path input/output voltage (source or drain pin) (Sx, Dx)		0		V_{DD}	V
V_{SEL}	Logic control input pin voltage (SELx)		0		5.5	V
T_A	Ambient temperature		–40		125	°C
I_{DC}	Continuous current through switch	Tj = 25°C		150		mA
		Tj = 85°C		120		mA
		Tj = 125°C		60		mA
		Tj = 130°C		50		mA
I_{peak}	Peak current through switch(1 ms period max, 10% duty cycle maximum)	Tj = 25°C		300		mA
		Tj = 85°C		300		mA
		Tj = 125°C		180		mA
		Tj = 130°C		160		mA

Copyright © 2024 Texas Instruments Incorporated

6.4 Thermal Information

THERMAL METRIC[1]		TMUX1101 / TMUX1102		UNIT
		DCK (SC70)	DBV (SOT-23)	
		5 PINS	5 PINS	
$R_{\theta JA}$	Junction-to-ambient thermal resistance	348.5	224.9	°C/W
$R_{\theta JC(top)}$	Junction-to-case (top) thermal resistance	238.3	150.6	°C/W
$R_{\theta JB}$	Junction-to-board thermal resistance	205.7	130.0	°C/W
Ψ_{JT}	Junction-to-top characterization parameter	141.4	74.8	°C/W
Ψ_{JB}	Junction-to-board characterization parameter	204.7	129.3	°C/W
$R_{\theta JC(bot)}$	Junction-to-case (bottom) thermal resistance	N/A	N/A	°C/W

(1) For more information about traditional and new thermal metrics, see the Semiconductor and IC Package Thermal Metrics application report.

6.5 Electrical Characteristics (V_{DD} = 5V ±10 %)

at T_A = 25°C, V_{DD} = 5V (unless otherwise noted)

PARAMETER		TEST CONDITIONS	TA	MIN	TYP	MAX	UNIT
ANALOG SWITCH							
R_{ON}	On-resistance	V_S = 0V to V_{DD} I_{SD} = 10mA Refer to On-resistance	25°C		1.8	4	Ω
			–40°C to +85°C			4.5	Ω
			–40°C to +125°C			4.9	Ω
$R_{ON\ FLAT}$	On-resistance flatness	V_S = 0V to V_{DD} I_{SD} = 10mA Refer to On-resistance	25°C		0.85		Ω
			–40°C to +85°C			1.6	Ω
			–40°C to +125°C			1.6	Ω
$I_{S(OFF)}$	Source off leakage current[1]	V_{DD} = 5V Switch Off V_D = 4.5V / 1.5V V_S = 1.5V / 4.5V Refer to Off-leakage current	25°C	–0.08	±0.005	0.08	nA
			–40°C to +85°C	–0.3		0.3	nA
			–40°C to +125°C	–0.9		0.9	nA
$I_{D(OFF)}$	Drain off leakage current[1]	V_{DD} = 5V Switch Off V_D = 4.5V / 1.5V V_S = 1.5V / 4.5V Refer to Off-leakage current	25°C	–0.08	±0.005	0.08	nA
			–40°C to +85°C	–0.3		0.3	nA
			–40°C to +125°C	–0.9		0.9	nA
$I_{D(ON)}$ $I_{S(ON)}$	Channel on leakage current	V_{DD} = 5V Switch On V_D = V_S = 2.5V Refer to On-leakage current	25°C	–0.025	±0.003	0.025	nA
			–40°C to +85°C	–0.2		0.2	nA
			–40°C to +125°C	–0.95		0.95	nA
$I_{D(ON)}$ $I_{S(ON)}$	Channel on leakage current	V_{DD} = 5V Switch On V_D = V_S = 4.5V / 1.5V Refer to On-leakage current	25°C	–0.1	±0.01	0.1	nA
			–40°C to +85°C	–0.35		0.35	nA
			–40°C to +125°C	–2		2	nA
LOGIC INPUTS (SEL)							
V_{IH}	Input logic high		–40°C to +125°C	1.49		5.5	V
V_{IL}	Input logic low		–40°C to +125°C	0		0.87	V
I_{IH} I_{IL}	Input leakage current		25°C		±0.005		µA
I_{IH} I_{IL}	Input leakage current		–40°C to +125°C			±0.06	µA
C_{IN}	Logic input capacitance		25°C		1		pF
C_{IN}	Logic input capacitance		–40°C to +125°C			2	pF

Copyright © 2024 Texas Instruments Incorporated

6.5 Electrical Characteristics (V_{DD} = 5V ±10 %) (continued)

at T_A = 25°C, V_{DD} = 5V (unless otherwise noted)

PARAMETER		TEST CONDITIONS	TA	MIN	TYP	MAX	UNIT
POWER SUPPLY							
I_{DD}	V_{DD} supply current	Logic inputs = 0V or 5.5V	25°C		0.003		µA
			–40°C to +125°C			1	µA
DYNAMIC CHARACTERISTICS							
t_{TRAN}	Transition time from control input	V_S = 3V R_L = 200Ω, C_L = 15pF Refer to Transition time	25°C		12		ns
			–40°C to +85°C			17	ns
			–40°C to +125°C			18	ns
Q_C	Charge Injection	V_S = 1V R_S = 0Ω, C_L = 1nF Refer to Charge injection	25°C		–1.5		pC
O_{ISO}	Off Isolation	R_L = 50Ω, C_L = 5pF f = 1MHz Refer to Off isolation	25°C		–62		dB
		R_L = 50Ω, C_L = 5pF f = 10MHz Refer to Off isolation	25°C		–40		dB
BW	Bandwidth	R_L = 50Ω, C_L = 5pF Refer to Bandwidth	25°C		300		MHz
C_{SOFF}	Source off capacitance	f = 1MHz	25°C		6		pF
C_{DOFF}	Drain off capacitance	f = 1MHz	25°C		10		pF
C_{SON} C_{DON}	On capacitance	f = 1MHz	25°C		17		pF

(1) When V_S is 4.5V, V_D is 1.5V or when V_S is 1.5V, V_D is 4.5V.

6.6 Electrical Characteristics (V_{DD} = 3.3V ±10 %)

at T_A = 25°C, V_{DD} = 3.3V (unless otherwise noted)

PARAMETER		TEST CONDITIONS	TA	MIN	TYP	MAX	UNIT
ANALOG SWITCH							
R_{ON}	On-resistance	V_S = 0V to V_{DD} I_{SD} = 10mA Refer to On-resistance	25°C		3.7	8.8	Ω
			–40°C to +85°C			9.5	Ω
			–40°C to +125°C			9.8	Ω
$R_{ON\ FLAT}$	On-resistance flatness	V_S = 0V to V_{DD} I_{SD} = 10mA Refer to On-resistance	25°C		1.9		Ω
			–40°C to +85°C		2		Ω
			–40°C to +125°C		2.2		Ω
$I_{S(OFF)}$	Source off leakage current(1)	V_{DD} = 3.3V Switch Off V_D = 3V / 1V V_S = 1V / 3V Refer to Off-leakage current	25°C	–0.05	±0.001	0.05	nA
			–40°C to +85°C	–0.2		0.2	nA
			–40°C to +125°C	–0.9		0.9	nA
$I_{D(OFF)}$	Drain off leakage current(1)	V_{DD} = 3.3V Switch Off V_D = 3V / 1V V_S = 1V / 3V Refer to Off-leakage current	25°C	–0.05	±0.001	0.05	nA
			–40°C to +85°C	–0.2		0.2	nA
			–40°C to +125°C	–0.9		0.9	nA
$I_{D(ON)}$ $I_{S(ON)}$	Channel on leakage current	V_{DD} = 3.3V Switch On V_D = V_S = 3V / 1V Refer to On-leakage current	25°C	–0.1	±0.005	0.1	nA
			–40°C to +85°C	–0.35		0.35	nA
			–40°C to +125°C	–2		2	nA

Copyright © 2024 Texas Instruments Incorporated

6.6 Electrical Characteristics (V_{DD} = 3.3V ±10 %) (continued)

at T_A = 25°C, V_{DD} = 3.3V (unless otherwise noted)

PARAMETER		TEST CONDITIONS	TA	MIN	TYP	MAX	UNIT
LOGIC INPUTS (SEL)							
V_{IH}	Input logic high		–40°C to +125°C	1.35		5.5	V
V_{IL}	Input logic low		–40°C to +125°C	0		0.8	V
I_{IH} I_{IL}	Input leakage current		25°C		±0.005		µA
I_{IH} I_{IL}	Input leakage current		–40°C to +125°C			±0.05	µA
C_{IN}	Logic input capacitance		25°C		1		pF
C_{IN}	Logic input capacitance		–40°C to +125°C			2	pF
POWER SUPPLY							
I_{DD}	V_{DD} supply current	Logic inputs = 0V or 5.5V	25°C		0.002		µA
			–40°C to +125°C			0.65	µA
DYNAMIC CHARACTERISTICS							
t_{TRAN}	Transition time from control input	V_S = 2V R_L = 200Ω, C_L = 15pF Refer to Transition time	25°C		14		ns
			–40°C to +85°C			20	ns
			–40°C to +125°C			22	ns
Q_C	Charge Injection	V_S = 1V R_S = 0Ω, C_L = 1nF Refer to Charge injection	25°C		–1.5		pC
O_{ISO}	Off Isolation	R_L = 50Ω, C_L = 5pF f = 1MHz Refer to Off isolation	25°C		–62		dB
		R_L = 50Ω, C_L = 5pF f = 10MHz Refer to Off isolation	25°C		–40		dB
BW	Bandwidth	R_L = 50Ω, C_L = 5pF Refer to Bandwidth	25°C		300		MHz
C_{SOFF}	Source off capacitance	f = 1MHz	25°C		6		pF
C_{DOFF}	Drain off capacitance	f = 1MHz	25°C		10		pF
C_{SON} C_{DON}	On capacitance	f = 1MHz	25°C		17		pF

(1) When V_S is 3V, V_D is 1V or when V_S is 1V, V_D is 3V.

6.7 Electrical Characteristics (V_{DD} = 1.8V ±10 %)

at T_A = 25°C, V_{DD} = 1.8V (unless otherwise noted)

PARAMETER		TEST CONDITIONS	TA	MIN	TYP	MAX	UNIT
ANALOG SWITCH							
R_{ON}	On-resistance	V_S = 0V to V_{DD} I_{SD} = 10mA Refer to On-resistance	25°C		40		Ω
			–40°C to +85°C			80	Ω
			–40°C to +125°C			80	Ω
$I_{S(OFF)}$	Source off leakage current(1)	V_{DD} = 1.98V Switch Off V_D = 1.62V / 1V V_S = 1V / 1.62V Refer to Off-leakage current	25°C	–0.05	±0.001	0.05	nA
			–40°C to +85°C	–0.2		0.2	nA
			–40°C to +125°C	–0.9		0.9	nA

6.7 Electrical Characteristics (V_{DD} = 1.8V ±10 %) (continued)

at T_A = 25°C, V_{DD} = 1.8V (unless otherwise noted)

PARAMETER		TEST CONDITIONS	TA	MIN	TYP	MAX	UNIT
$I_{D(OFF)}$	Drain off leakage current(1)	V_{DD} = 1.98V Switch Off V_D = 1.62V / 1V V_S = 1V / 1.62V Refer to Off-leakage current	25°C	–0.05	±0.001	0.05	nA
			–40°C to +85°C	–0.2		0.2	nA
			–40°C to +125°C	–0.9		0.9	nA
$I_{D(ON)}$ $I_{S(ON)}$	Channel on leakage current	V_{DD} = 1.98V Switch On V_D = V_S = 1.62V / 1V Refer to On-leakage current	25°C	–0.1	±0.005	0.1	nA
			–40°C to +85°C	–0.35		0.35	nA
			–40°C to +125°C	–2		2	nA
LOGIC INPUTS (SEL)							
V_{IH}	Input logic high		–40°C to +125°C	1.07		5.5	V
V_{IL}	Input logic low		–40°C to +125°C	0		0.68	V
I_{IH} I_{IL}	Input leakage current		25°C		±0.005		µA
I_{IH} I_{IL}	Input leakage current		–40°C to +125°C			±0.05	µA
C_{IN}	Logic input capacitance		25°C		1		pF
C_{IN}	Logic input capacitance		–40°C to +125°C			2	pF
POWER SUPPLY							
I_{DD}	V_{DD} supply current	Logic inputs = 0V or 5.5V	25°C		0.001		µA
			–40°C to +125°C			0.45	µA
DYNAMIC CHARACTERISTICS							
t_{TRAN}	Transition time from control input	V_S = 1V R_L = 200Ω, C_L = 15pF Refer to Transition time	25°C		25		ns
			–40°C to +85°C			44	ns
			–40°C to +125°C			44	ns
Q_C	Charge Injection	V_S = 1V R_S = 0Ω, C_L = 1nF Refer to Charge injection	25°C		–1.5		pC
O_{ISO}	Off Isolation	R_L = 50Ω, C_L = 5pF f = 1MHz Refer to Off isolation	25°C		–62		dB
		R_L = 50Ω, C_L = 5pF f = 10MHz Refer to Off isolation	25°C		–40		dB
BW	Bandwidth	R_L = 50Ω, C_L = 5pF Refer to Bandwidth	25°C		300		MHz
C_{SOFF}	Source off capacitance	f = 1MHz	25°C		6		pF
C_{DOFF}	Drain off capacitance	f = 1MHz	25°C		10		pF
C_{SON} C_{DON}	On capacitance	f = 1MHz	25°C		17		pF

(1) When V_S is 1.62V, V_D is 1V or when V_S is 1V, V_D is 1.62V.

6.8 Electrical Characteristics (V_{DD} = 1.2V ±10 %)

PARAMETER		TEST CONDITIONS	TA	MIN	TYP	MAX	UNIT
ANALOG SWITCH							
R_{ON}	On-resistance	V_S = 0V to V_{DD} I_{SD} = 10mA Refer to On-resistance	25°C		70		Ω
			–40°C to +85°C			105	Ω
			–40°C to +125°C			105	Ω

Copyright © 2024 Texas Instruments Incorporated

6.8 Electrical Characteristics (V_{DD} = 1.2V ±10 %) (continued)

PARAMETER		TEST CONDITIONS	TA	MIN	TYP	MAX	UNIT
$I_{S(OFF)}$	Source off leakage current[(1)]	V_{DD} = 1.32V Switch Off V_D = 1V / 0.8V V_S = 0.8V / 1V Refer to Off-leakage current	25°C	–0.05	±0.001	0.05	nA
			–40°C to +85°C	–0.2		0.2	nA
			–40°C to +125°C	–0.9		0.9	nA
$I_{D(OFF)}$	Drain off leakage current[(1)]	V_{DD} = 1.32V Switch Off V_D = 1V / 0.8V V_S = 0.8V / 1V Refer to Off-leakage current	25°C	–0.05	±0.001	0.05	nA
			–40°C to +85°C	–0.2		0.2	nA
			–40°C to +125°C	–0.9		0.9	nA
$I_{D(ON)}$ $I_{S(ON)}$	Channel on leakage current	V_{DD} = 1.32V Switch On V_D = V_S = 1V / 0.8V Refer to On-leakage current	25°C	–0.1	±0.005	0.1	nA
			–40°C to +85°C	–0.35		0.35	nA
			–40°C to +125°C	–2		2	nA
LOGIC INPUTS (SEL)							
V_{IH}	Input logic high		–40°C to +125°C	0.96		5.5	V
V_{IL}	Input logic low		–40°C to +125°C	0		0.36	V
I_{IH} I_{IL}	Input leakage current		25°C		±0.005		µA
I_{IH} I_{IL}	Input leakage current		–40°C to +125°C			±0.05	µA
C_{IN}	Logic input capacitance		25°C		1		pF
C_{IN}	Logic input capacitance		–40°C to +125°C			2	pF
POWER SUPPLY							
I_{DD}	V_{DD} supply current	Logic inputs = 0V or 5.5V	25°C		0.001		µA
			–40°C to +125°C			0.38	µA
DYNAMIC CHARACTERISTICS							
t_{TRAN}	Transition time from control input	V_S = 1V R_L = 200Ω, C_L = 15pF Refer to Transition time	25°C		55		ns
			–40°C to +85°C			190	ns
			–40°C to +125°C			190	ns
Q_C	Charge Injection	V_S = 1V R_S = 0Ω, C_L = 1nF Refer to Charge injection	25°C		–1.5		pC
O_{ISO}	Off Isolation	R_L = 50Ω, C_L = 5pF f = 1MHz Refer to Off isolation	25°C		–62		dB
		R_L = 50Ω, C_L = 5pF f = 10MHz Refer to Off isolation	25°C		–42		dB
BW	Bandwidth	R_L = 50Ω, C_L = 5pF Refer to Bandwidth	25°C		300		MHz
C_{SOFF}	Source off capacitance	f = 1MHz	25°C		6		pF
C_{DOFF}	Drain off capacitance	f = 1MHz	25°C		10		pF
C_{SON} C_{DON}	On capacitance	f = 1MHz	25°C		17		pF

(1) When V_S is 1V, V_D is 0.8V or when V_S is 0.8V, V_D is 1V.

Copyright © 2024 Texas Instruments Incorporated

6.9 Typical Characteristics

At T_A = 25°C, V_{DD} = 5V (unless otherwise noted).

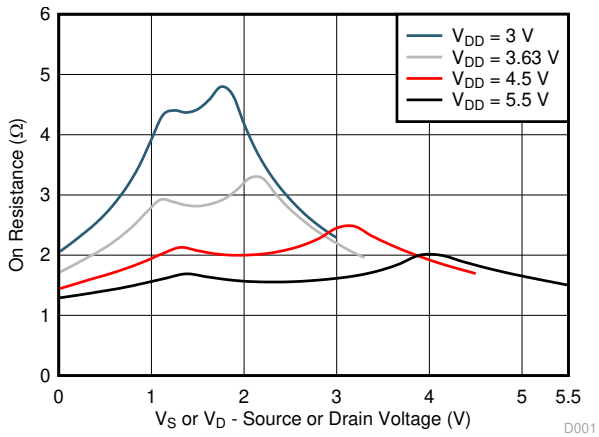

T_A = 25°C

Figure 6-1. On-Resistance vs Source or Drain Voltage

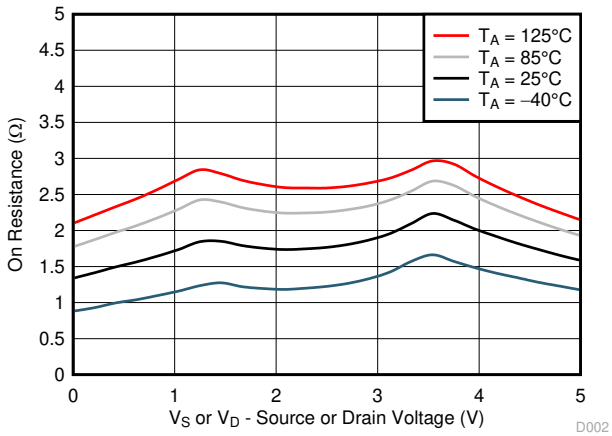

V_{DD} = 5V

Figure 6-2. On-Resistance vs Temperature

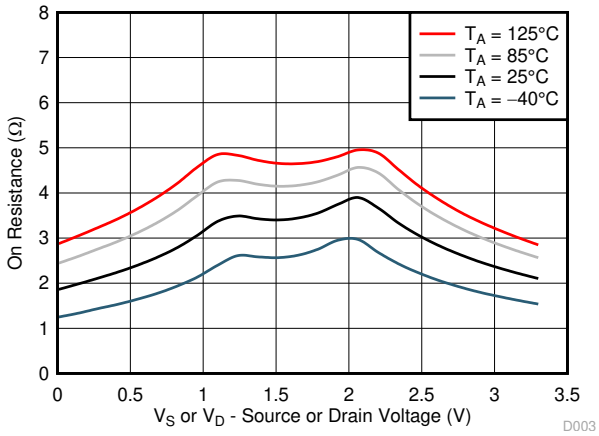

V_{DD} = 3.3V

Figure 6-3. On-Resistance vs Temperature

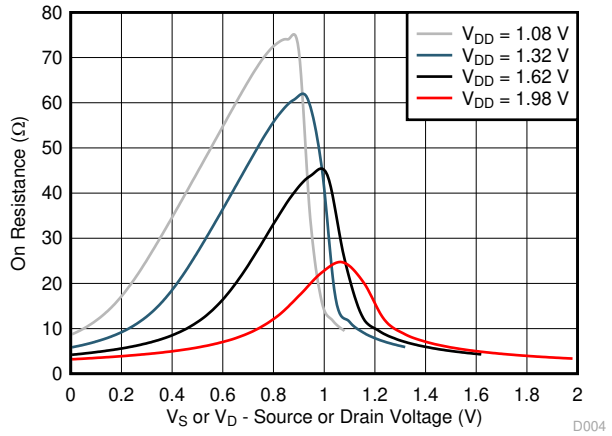

T_A = 25°C

Figure 6-4. On-Resistance vs Source or Drain Voltage

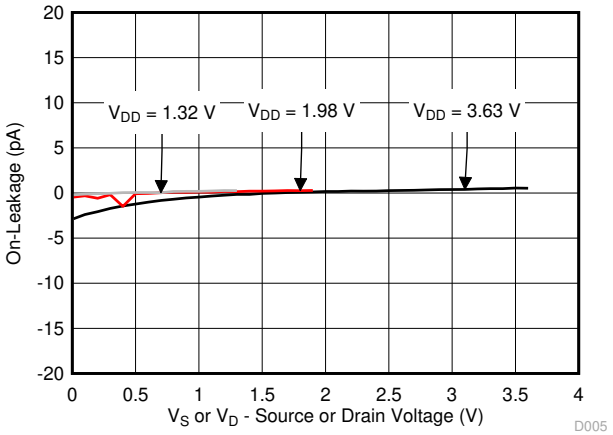

T_A = 25°C

Figure 6-5. On-Leakage vs Source or Drain Voltage

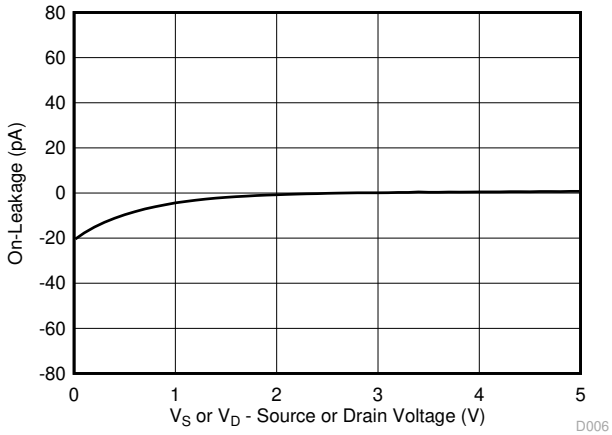

V_{DD} = 5V

Figure 6-6. On-Leakage vs Source or Drain Voltage

Copyright © 2024 Texas Instruments Incorporated

6.9 Typical Characteristics (continued)

At T_A = 25°C, V_{DD} = 5V (unless otherwise noted).

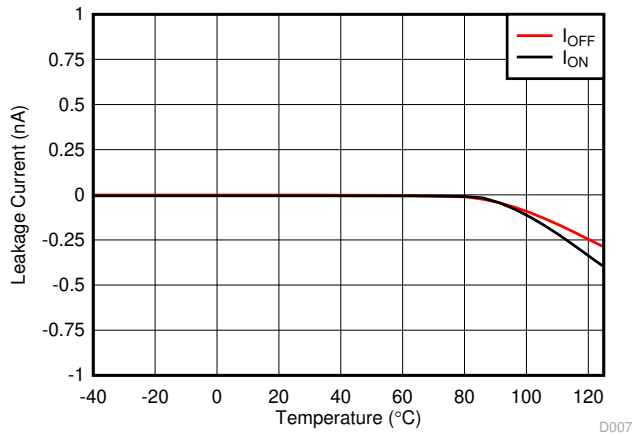

V_{DD} = 3.3V

Figure 6-7. Leakage Current vs Temperature

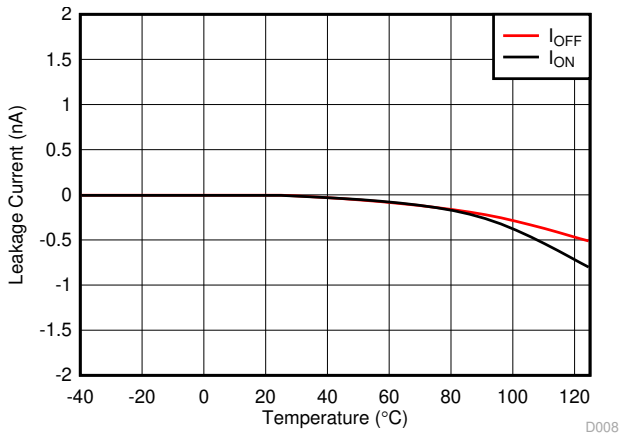

V_{DD} = 5V

Figure 6-8. Leakage Current vs Temperature

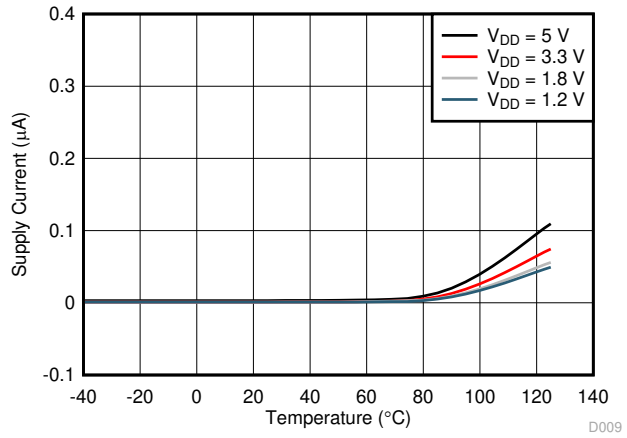

V_{SEL} = 5.5V

Figure 6-9. Supply Current vs Temperature

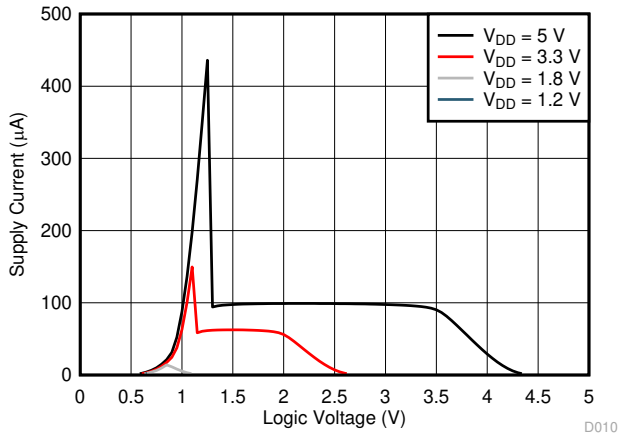

T_A = 25°C

Figure 6-10. Supply Current vs Logic Voltage

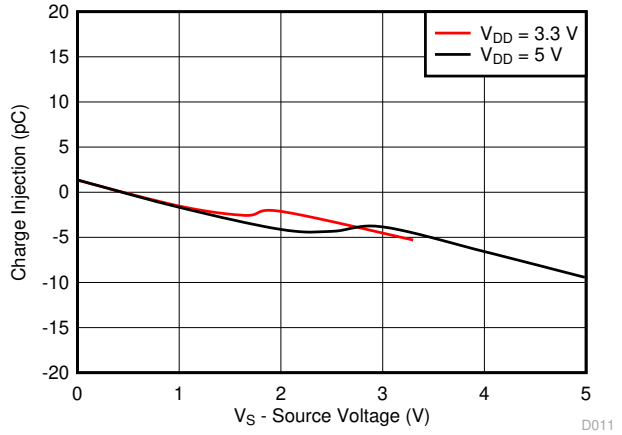

T_A = -40°C to 125°C

Figure 6-11. Charge Injection vs Source Voltage

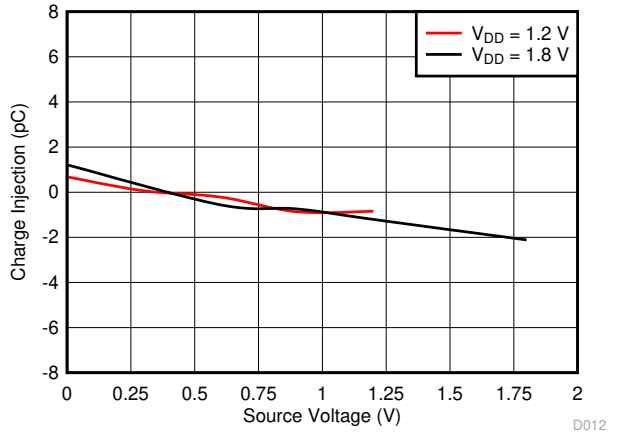

T_A = –40°C to 125°C

Figure 6-12. Charge Injection vs Source Voltage

6.9 Typical Characteristics (continued)

At T_A = 25°C, V_{DD} = 5V (unless otherwise noted).

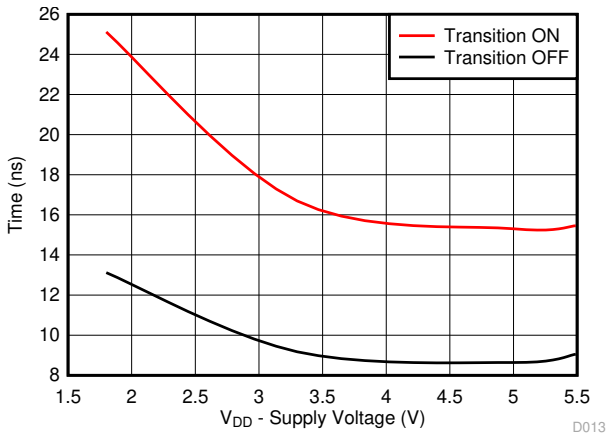

T_A = -40°C to +125°C

Figure 6-13. Output $T_{TRANSITION}$ vs Supply Voltage

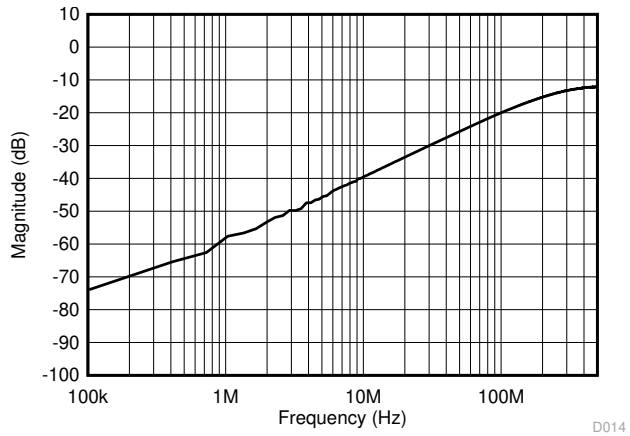

T_A = -40°C to +125°C

Figure 6-14. Off-Isolation vs Frequency

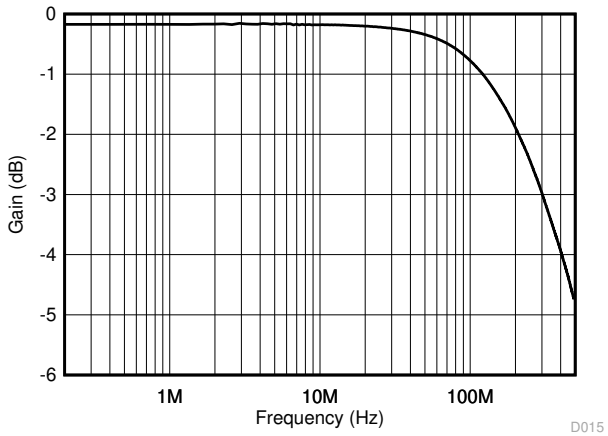

T_A = -40°C to +125°C

Figure 6-15. On Response vs Frequency

Copyright © 2024 Texas Instruments Incorporated

7 Parameter Measurement Information

7.1 On-Resistance

The on-resistance of a device is the ohmic resistance between the source (S) and drain (D) pins of the device. The on-resistance varies with input voltage and supply voltage. The symbol R_{ON} is used to denote on-resistance. The measurement setup used to measure R_{ON} is shown in Figure 7-1. Voltage (V) and current (I_{SD}) are measured using this setup, and R_{ON} is computed with $R_{ON} = V / I_{SD}$:

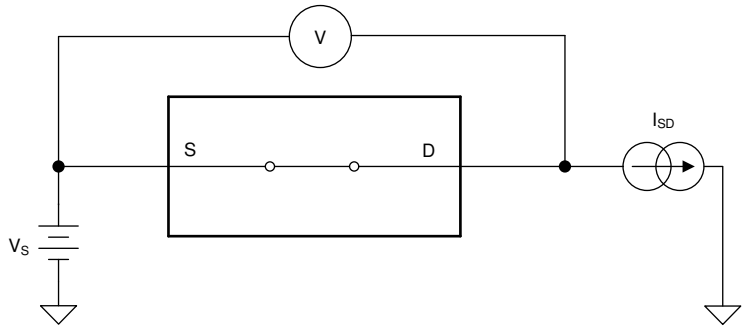

Figure 7-1. On-Resistance Measurement Setup

7.2 Off-Leakage Current

There are two types of leakage currents associated with a switch during the off state:

1. Source off-leakage current
2. Drain off-leakage current

Source leakage current is defined as the leakage current flowing into or out of the source pin when the switch is off. This current is denoted by the symbol $I_{S(OFF)}$.

Drain leakage current is defined as the leakage current flowing into or out of the drain pin when the switch is off. This current is denoted by the symbol $I_{D(OFF)}$.

The setup used to measure both off-leakage currents is shown in Figure 7-2.

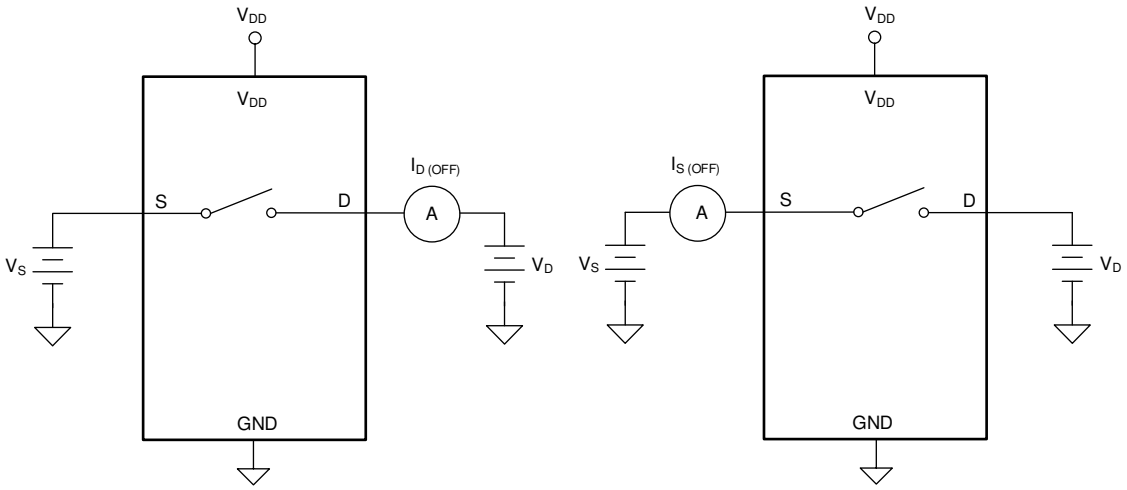

Figure 7-2. Off-Leakage Measurement Setup

7.3 On-Leakage Current

Source on-leakage current is defined as the leakage current flowing into or out of the source pin when the switch is on. This current is denoted by the symbol $I_{S(ON)}$.

Drain on-leakage current is defined as the leakage current flowing into or out of the drain pin when the switch is on. This current is denoted by the symbol $I_{D(ON)}$.

Either the source pin or drain pin is left floating during the measurement. Figure 7-3 shows the circuit used for measuring the on-leakage current, denoted by $I_{S(ON)}$ or $I_{D(ON)}$.

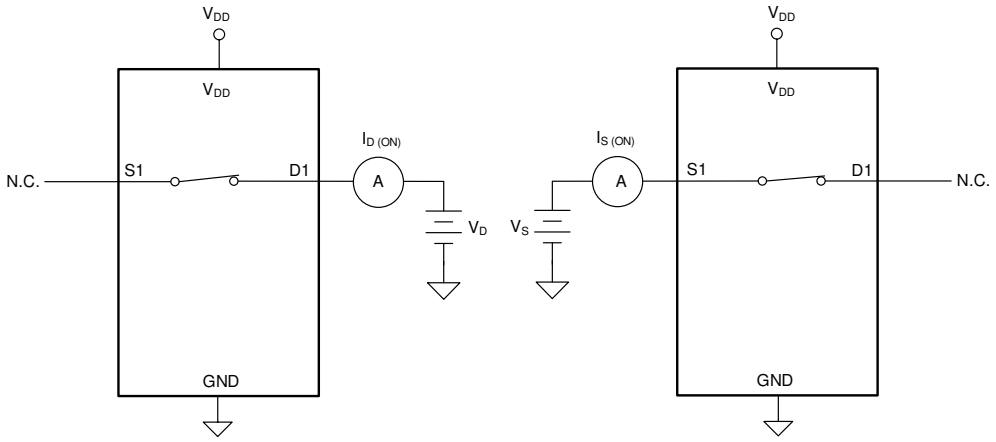

Figure 7-3. On-Leakage Measurement Setup

7.4 Transition Time

Transition time is defined as the time taken by the output of the device to rise or fall 10% after the address signal has risen or fallen past the logic threshold. The 10% transition measurement is utilized to provide the timing of the device. System level timing can then account for the time constant added from the load resistance and load capacitance. Figure 7-4 shows the setup used to measure transition time, denoted by the symbol $t_{TRANSITION}$.

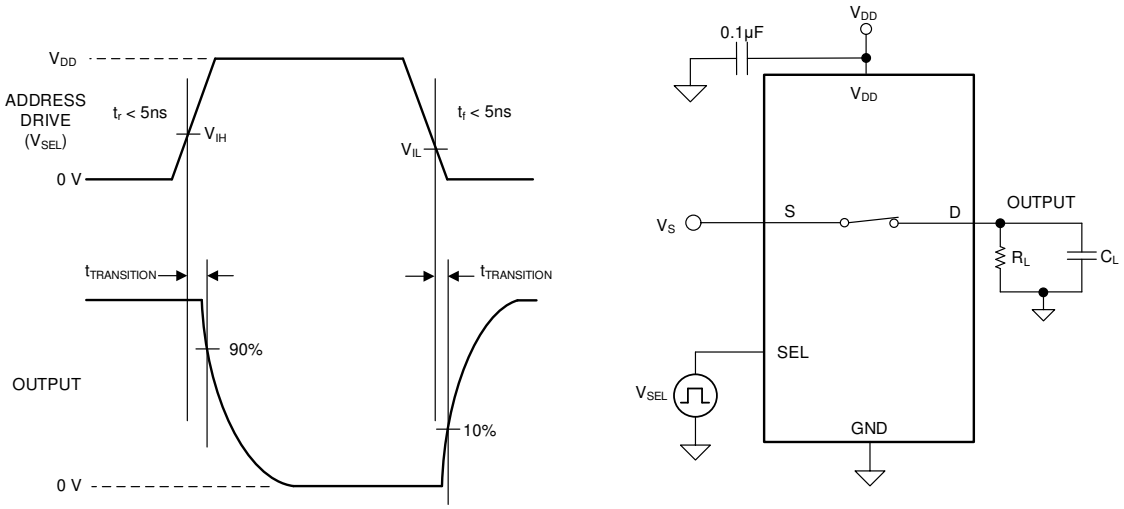

Figure 7-4. Transition-Time Measurement Setup

Copyright © 2024 Texas Instruments Incorporated

7.5 Charge Injection

The TMUX110x devices have a transmission-gate topology. Any mismatch in capacitance between the NMOS and PMOS transistors results in a charge injected into the drain or source during the falling or rising edge of the gate signal. The amount of charge injected into the source or drain of the device is known as charge injection, and is denoted by the symbol Q_C. Figure 7-5 shows the setup used to measure charge injection from source (S) to drain (D).

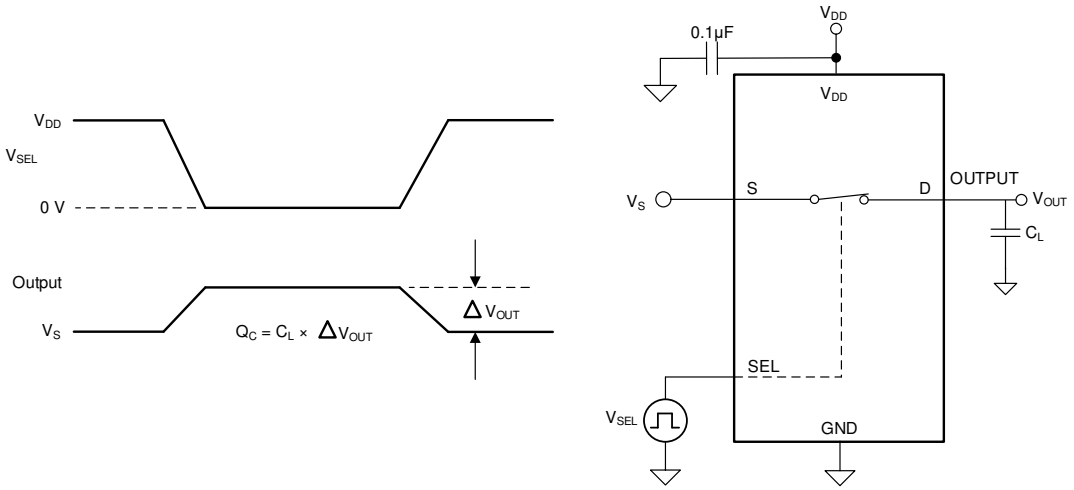

Figure 7-5. Charge-Injection Measurement Setup

7.6 Off Isolation

Off isolation is defined as the ratio of the signal at the drain pin (D) of the device when a signal is applied to the source pin (S) of an off-channel. The characteristic impedance, Z_0, for the measurement is 50Ω. Figure 7-6 shows the setup used to measure off isolation. Use off isolation equation to compute off isolation.

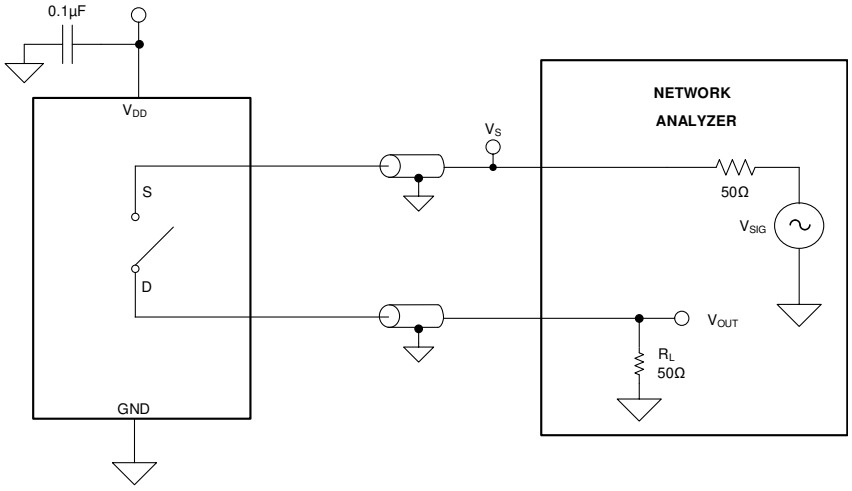

Figure 7-6. Off Isolation Measurement Setup

$$\text{Off Isolation} = 20 \cdot \text{Log}\left(\frac{V_{OUT}}{V_S}\right) \quad (1)$$

7.7 Bandwidth

Bandwidth is defined as the range of frequencies that are attenuated by less than 3dB when the input is applied to the source pin (S) of an on-channel, and the output is measured at the drain pin (D) of the device. The characteristic impedance, Z_0, for the measurement is 50Ω. Figure 7-7 shows the setup used to measure bandwidth.

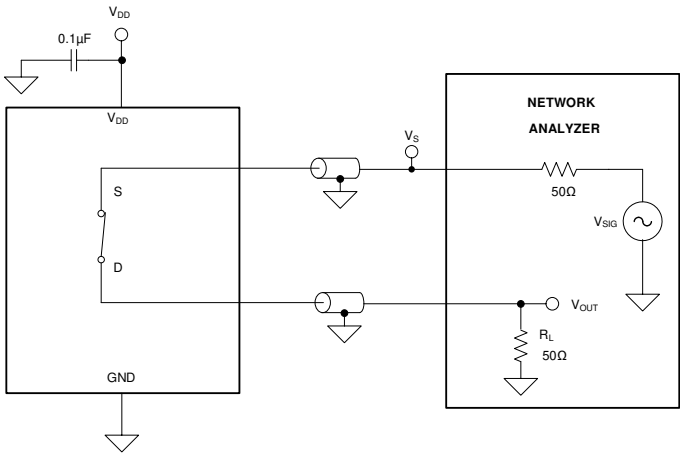

Figure 7-7. Bandwidth Measurement Setup

Copyright © 2024 Texas Instruments Incorporated

8 Detailed Description

8.1 Overview

The TMUX1101 and TMUX1102 are 1:1 (SPST) switches. The TMUX110x devices have a controllable single-pole, single-throw switch that is turned on or off based on the state of the select pin. The switch of the TMUX1101 is turned on with a Logic 1 on the select pin, while a Logic 0 is required to turn on switch in the TMUX1102. The following figure shows the functional block diagram for the TMUX110x devices.

8.2 Functional Block Diagram

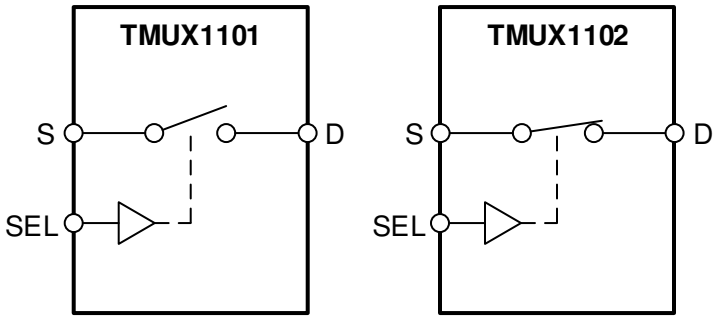

ALL SWITCHES SHOWN FOR A LOGIC 0 INPUT

8.3 Feature Description

8.3.1 Bidirectional Operation

The TMUX110x conducts equally well from source (S) to drain (D) or from drain (D) to source (S). Each channel has very similar characteristics in both directions and supports both analog and digital signals.

8.3.2 Rail-to-Rail Operation

The valid signal path input/output voltage for TMUX110x ranges from GND to V_{DD}.

8.3.3 1.8V Logic Compatible Inputs

The TMUX110x devices have 1.8V logic compatible control for all logic control inputs. The logic input thresholds scale with supply but still provide 1.8V logic control when operating at 5.5V supply voltage. 1.8V logic level inputs allows the TMUX110x devices to interface with processors that have lower logic I/O rails and eliminates the need for an external translator, which saves both space and BOM cost. The current consumption of the TMUX110x devices increase when using 1.8V logic with higher supply voltage as shown in Figure 6-10. For more information on 1.8V logic implementations refer to *Simplifying Design with 1.8V logic Muxes and Switches*.

8.3.4 Fail-Safe Logic

The TMUX110x supports Fail-Safe Logic on the control input pin (SEL) allowing for operation up to 5.5V, regardless of the state of the supply pin. This feature allows voltages on the control pin to be applied before the supply pin, protecting the device from potential damage. Fail-Safe Logic minimizes system complexity by removing the need for power supply sequencing on the logic control pin. For example, the Fail-Safe Logic feature allows the select pin of the TMUX110x devices to be ramped to 5.5V while V_{DD} = 0V. Additionally, the feature enables operation of the TMUX110x with V_{DD} = 1.2V while allowing the select pin to interface with a logic level of another device up to 5.5V.

Copyright © 2024 Texas Instruments Incorporated

8.3.5 Ultra-Low Leakage Current

The TMUX110x devices provide extremely low on-leakage and off-leakage currents. The TMUX110x devices are capable of switching signals from high source-impedance inputs into a high input-impedance op amp with minimal offset error because of the ultra-low leakage currents. Figure 8-1 shows typical leakage currents of the TMUX110x devices versus temperature at V_{DD} = 5V.

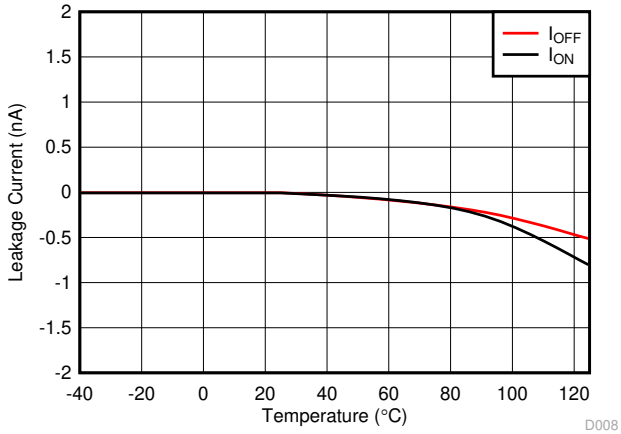

Figure 8-1. Leakage Current vs Temperature

8.3.6 Ultra-Low Charge Injection

The TMUX110x devices have a transmission gate topology, as shown in Figure 8-2. Any mismatch in the stray capacitance associated with the NMOS and PMOS causes an output level change whenever the switch is opened or closed.

The TMUX110x devices have special charge-injection cancellation circuitry that reduces the source-to-drain charge injection to -1.5pC at V_S = 1V as shown in Figure 8-3.

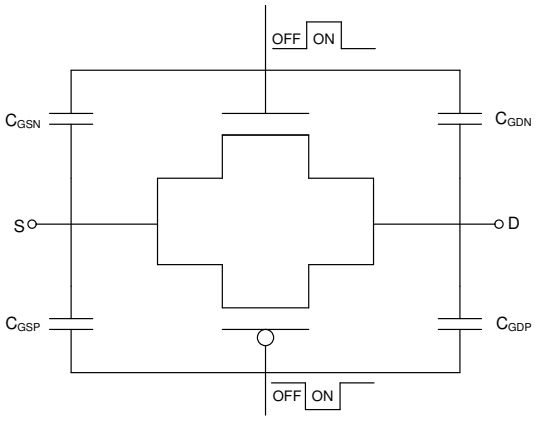

Figure 8-2. Transmission Gate Topology

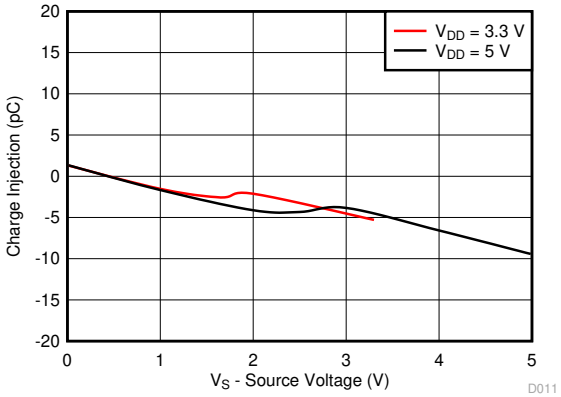

Figure 8-3. Charge Injection vs Source Voltage

Copyright © 2024 Texas Instruments Incorporated

8.4 Device Functional Modes

The TMUX110x devices have a controllable single-pole, single-throw switch that is turned on or turned off based on the state of the corresponding select pin. The control pin can be as high as 5.5V.

The TMUX110x devices can be operated without any external components except for the supply decoupling capacitors. Unused logic control pins should be tied to GND or V_{DD} in order to ensure the device does not consume additional current as highlighted in *Implications of Slow or Floating CMOS Inputs*. Unused signal path inputs (Sx or Dx) should be connection to GND.

8.4.1 Truth Tables

Table 8-1 and Table 8-2 lists the truth tables for the TMUX1101 and TMUX1102 respectively.

Table 8-1. TMUX1101 Truth Table

SEL	SWITCH STATE
0	OFF (HI-Z)
1	ON

Table 8-2. TMUX1102 Truth Table

SEL	SWITCH STATE
0	ON
1	OFF (HI-Z)

Copyright © 2024 Texas Instruments Incorporated

9 Application and Implementation

Note

Information in the following applications sections is not part of the TI component specification, and TI does not warrant its accuracy or completeness. TI's customers are responsible for determining suitability of components for their purposes, as well as validating and testing their design implementation to confirm system functionality.

9.1 Application Information

The TMUX11xx family offers ultra-low input and output leakage currents and low charge injection. These devices operate up to 5.5V, and offer true rail-to-rail input and output of both analog and digital signals. The TMUX110x have a low on-capacitance which allows faster settling time when multiplexing inputs in the time domain. These features make the TMUX11xx devices a family of precision, high-performance switches and multiplexers for low-voltage applications.

9.2 Typical Application - Sample-and-Hold Circuit

One useful application to take advantage of the TMUX1101 and TMUX1102's performance is the sample-and-hold circuit. A sample-and-hold circuit can be useful for an analog to digital converter (ADC) to sample a varying input voltage with improved reliability and stability. It can also be used to store the output samples from a single digital-to-analog converter (DAC) in a multi-output application. A simple sample-and-hold circuit can be realized using an analog switch such as the TMUX1101, and TMUX1102 analog switches. Figure 9-1 shows a single channel sample-and hold circuit using either of the TMUX110x devices.

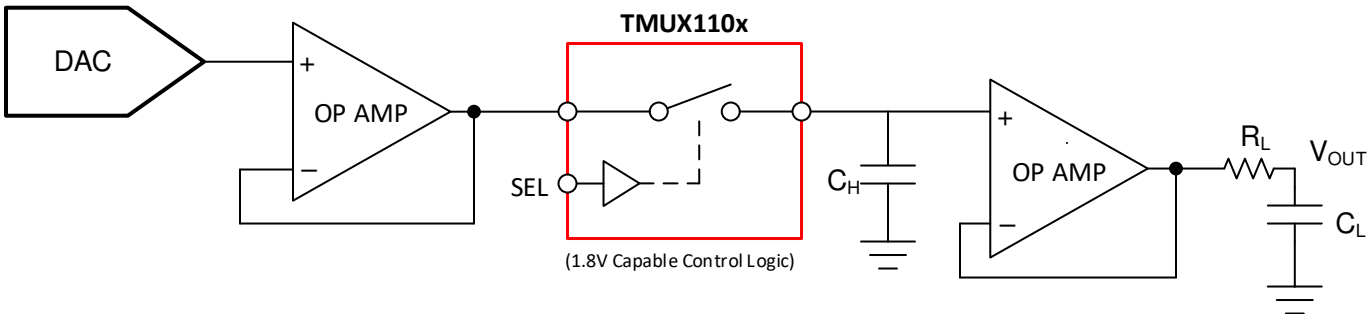

Figure 9-1. Single Channel Sample-and-Hold Circuit Example

An optional op amp is used before the switch since driving large capacitive loads is a typical limitation of buffered DACs. The additional buffer stage is included following the DAC to prevent potential stability problems from driving a large capacitive load.

Generally, the switch delivers only the input signals to the holding capacitors. However, when the switch is toggled, some amount of charge is transferred to the switch output in the form of charge injection, resulting in a pedestal sampling error. The TMUX1101 and TMUX1102 switches have excellent charge injection performance of only -1.5pC, making them excellent choices for this implementation to minimize sampling error. The pedestal error voltage is indirectly related to the size of the capacitance on the output, for better precision a larger capacitor is required due to charge injection.

Copyright © 2024 Texas Instruments Incorporated

9.2.1 Design Requirements

The purpose of this precision design is to implement an optimized single channel sample-and-hold circuit using a precision 1:1 (SPST) CMOS switch. The sample-and-hold circuit needs to be capable of supporting high accuracy with minimized pedestal error and fast settling time.

9.2.2 Detailed Design Procedure

The TMUX1101 or TMUX1102 switch is used in conjunction with the voltage holding capacitors (C_H) to implement the sample-and-hold circuit. The basic operation is:

1. When the switch is closed, it samples the input voltage and charges the holding capacitors (C_H) to the input voltage values.
2. When the switch is open, the holding capacitors (C_H) holds its previous value, maintaining stable voltage at the amplifier output (V_{OUT}).

Due to switch and capacitor leakage current, as well as amplifier bias current, the voltage on the hold capacitors droops with time. The TMUX1101 and TMUX1102 minimize the droops due to its ultra-low leakage performance. At 25°C, the TMUX1101 and TMUX1102 have extremely low leakage current of 3pA typical.

Refer to *Sample and Hold Glitch Reduction for Precision Outputs Reference Design* for more information on sample-and-hold circuits.

9.2.3 Application Curve

TMUX1101 and TMUX1102 have excellent charge injection performance and ultra-low leakage current, making them excellent choices to minimize sampling error for the sample-and-hold application. The charge injection and leakage performance are shown in Figure 9-2 and Figure 9-3 respectively.

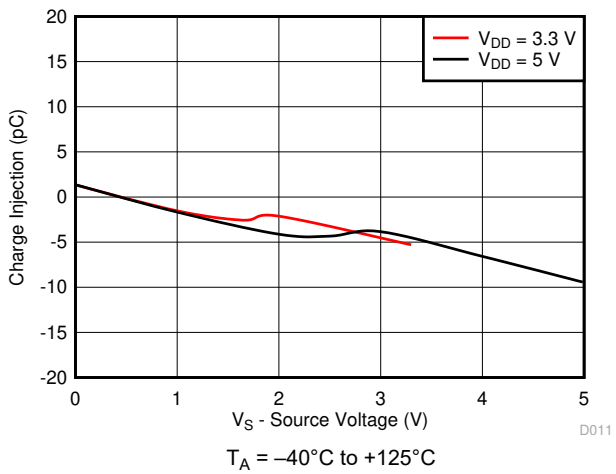

Figure 9-2. Charge Injection vs Source Voltage

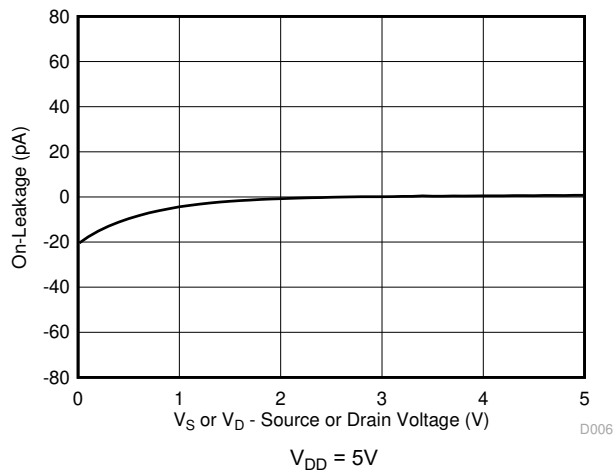

Figure 9-3. On-Leakage vs Source or Drain Voltage

9.3 Typical Application - Switched Gain Amplifier

Switches and multiplexers are commonly used in the feedback path of amplifier circuits to provide configurable gain control. By using various resistor values on the switch path, the TMUX110x allows the system to have multiple gain settings. An external resistor ensures the amplifier is not operating in an open loop configuration. A transimpedance amplifier (TIA) for photodiode inputs is a common circuit that requires gain control using a switch to convert the output current of the photodiode into a voltage for the MCU or processor. The amount of light present during a photodiode measurement is dependent on the time of day and available light source. An external switch such as the TMUX110x can be utilized to increase the gain when a smaller photodiode current is present. The leakage current, capacitance, and charge injection performance of the TMUX110x are key specifications to evaluate when selecting a device for gain control. An example switched gain amplifier circuit is shown in Figure 9-4.

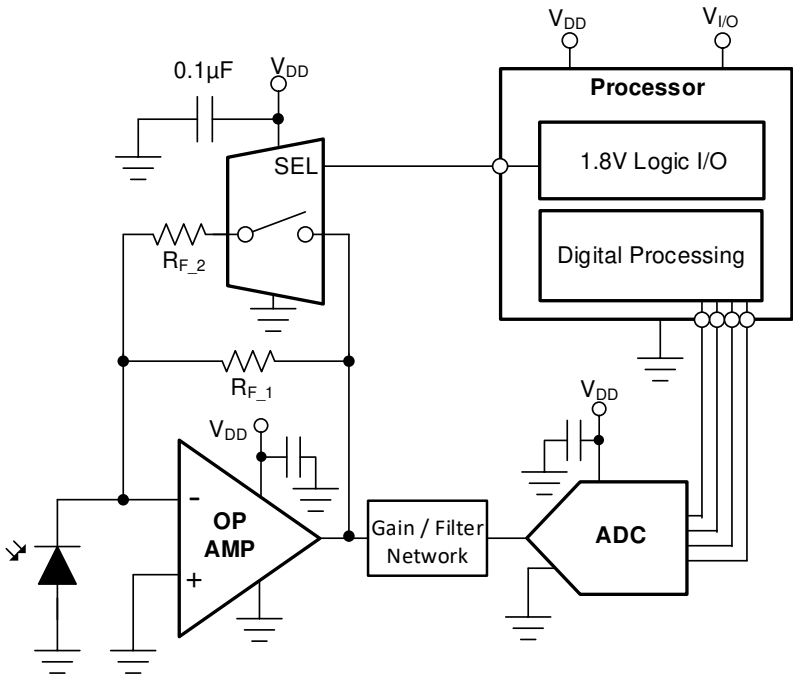

Figure 9-4. Configurable Gain Setting of a TIA Circuit

9.3.1 Design Requirements

For this design example, use the parameters listed in Table 9-1.

Table 9-1. Design Parameters

PARAMETERS	VALUES
Supply (V_{DD})	3.3V
Input / Output signal range	0µA to 10µA
Control logic thresholds	1.8V compatible

Copyright © 2024 Texas Instruments Incorporated

9.3.2 Detailed Design Procedure

The TMUX110x devices can be operated without any external components except for the supply decoupling capacitors. All inputs signals passing through the switch must fall within the recommended operating conditions of the TMUX110x, including signal range and continuous current. For this design example, with a supply of 3.3V, the signals can range from 0V to 3.3V when the device is powered. The maximum continuous current can be 30mA.

Photodiodes commonly have a current output that ranges from a few hundred picoamps to tens of microamps based on the amount of light being absorbed. The TMUX110x devices have a typical On-leakage current of less than 10pA, which would lead to an accuracy well within 1% of a full scale 10µA signal. The low ON and OFF capacitance of the TMUX110x improves system stability by minimizing the total capacitance on the output of the amplifier. Lower capacitance leads to less overshoot and ringing in the system, which can cause the amplifier circuit to become unstable if the phase margin is not at least 45°. Refer to *Improve Stability Issues with Low C_{ON} Multiplexers* for more information on calculating the phase margin versus percent overshoot.

9.3.3 Application Curve

The TMUX110x devices are capable of switching signals from high source-impedance inputs into a high input-impedance op amp with minimal offset error because of the ultra-low leakage currents.

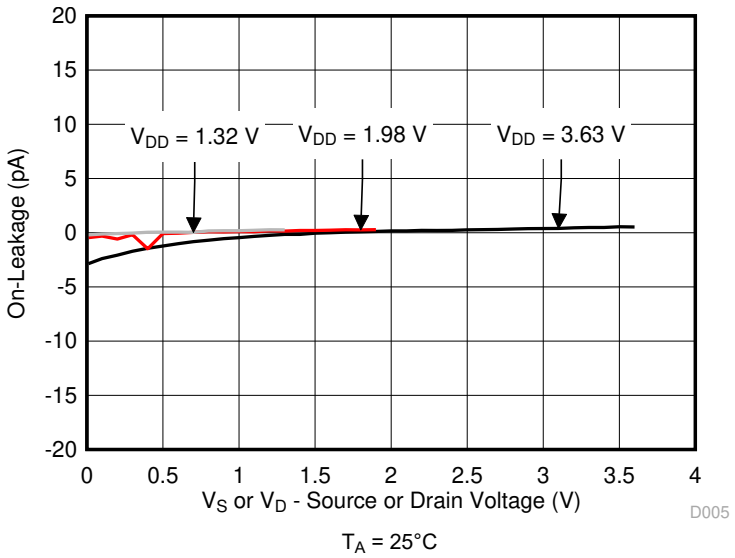

Figure 9-5. On-Leakage vs Source or Drain Voltage

9.4 Power Supply Recommendations

The TMUX110x devices operate across a wide supply range of 1.08V to 5.5V. Do not exceed the absolute maximum ratings because stresses beyond the listed ratings can cause permanent damage to the devices.

Power-supply bypassing improves noise margin and prevents switching noise propagation from the V_{DD} supply to other components. Good power-supply decoupling is important to achieve optimum performance. For improved supply noise immunity, use a supply decoupling capacitor ranging from 0.1µF to 10µF from V_{DD} to ground. Place the bypass capacitors as close to the power supply pins of the device as possible using low-impedance connections. TI recommends using multi-layer ceramic chip capacitors (MLCCs) that offer low equivalent series resistance (ESR) and inductance (ESL) characteristics for power-supply decoupling purposes. For very sensitive systems, or for systems in harsh noise environments, avoiding the use of vias for connecting the capacitors to the device pins may offer superior noise immunity. The use of multiple vias in parallel lowers the overall inductance and is beneficial for connections to ground planes.

9.5 Layout

9.5.1 Layout Guidelines

When a PCB trace turns a corner at a 90° angle, a reflection can occur. A reflection occurs primarily because of the change of width of the trace. At the apex of the turn, the trace width increases to 1.414 times the width. This increase upsets the transmission-line characteristics, especially the distributed capacitance and self–inductance of the trace which results in the reflection. Not all PCB traces can be straight and therefore some traces must turn corners.Figure 9-6 shows progressively better techniques of rounding corners. Only the last example (BEST) maintains constant trace width and minimizes reflections.

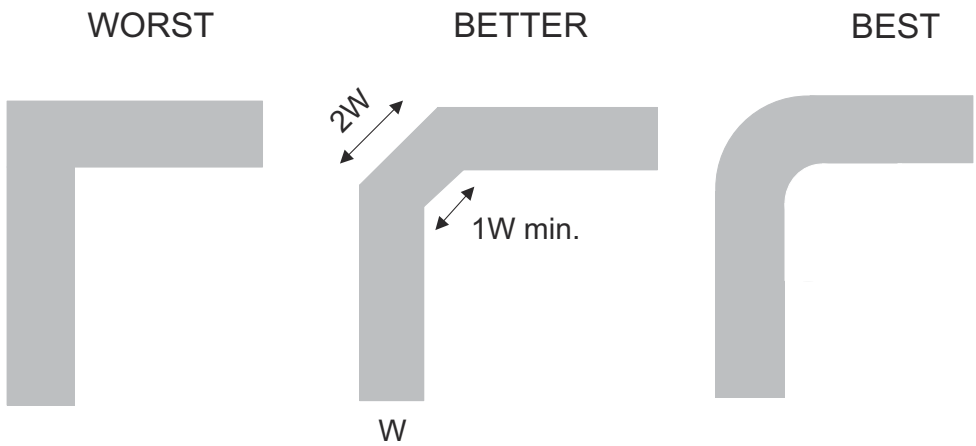

Figure 9-6. Trace example

Route high-speed signals using a minimum of vias and corners which reduces signal reflections and impedance changes. When a via must be used, increase the clearance size around it to minimize its capacitance. Each via introduces discontinuities in the signal's transmission line and increases the chance of picking up interference from the other layers of the board. Be careful when designing test points, through-hole pins are not recommended at high frequencies.

Copyright © 2024 Texas Instruments Incorporated

Figure 9-7 shows an example of a PCB layout with the TMUX110x. Some key considerations are as follows:

- Decouple the V_{DD} pin with a 0.1µF capacitor, placed as close to the pin as possible. Ensure that the capacitor voltage rating is sufficient for the V_{DD} supply.
- Keep the input lines as short as possible.
- Use a solid ground plane to help reduce electromagnetic interference (EMI) noise pickup.
- Do not run sensitive analog traces in parallel with digital traces. Avoid crossing digital and analog traces if possible, and only make perpendicular crossings when necessary.

9.5.2 Layout Example

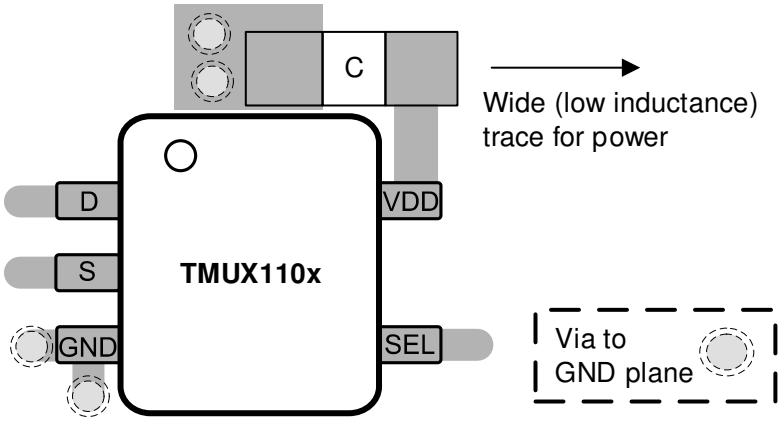

Figure 9-7. TMUX110x Layout Example

10 Device and Documentation Support

10.1 Documentation Support

10.1.1 Related Documentation

For related documentation, see the following:

- Texas Instruments, *Sample and Hold Glitch Reduction for Precision Outputs Reference Design*.
- Texas Instruments, *True Differential, 4 x 2 MUX, Analog Front End, Simultaneous-Sampling ADC Circuit*.
- Texas Instruments, *Improve Stability Issues with Low CON Multiplexers*.
- Texas Instruments, *Simplifying Design with 1.8V logic Muxes and Switches*.
- Texas Instruments, *Eliminate Power Sequencing with Powered-off Protection Signal Switches*.
- Texas Instruments, *System-Level Protection for High-Voltage Analog Multiplexers*.

10.2 Receiving Notification of Documentation Updates

To receive notification of documentation updates, navigate to the device product folder on ti.com. Click on *Notifications* to register and receive a weekly digest of any product information that has changed. For change details, review the revision history included in any revised document.

10.3 Support Resources

TI E2E™ support forums are an engineer's go-to source for fast, verified answers and design help — straight from the experts. Search existing answers or ask your own question to get the quick design help you need.

Linked content is provided "AS IS" by the respective contributors. They do not constitute TI specifications and do not necessarily reflect TI's views; see TI's Terms of Use.

10.4 Trademarks

TI E2E™ is a trademark of Texas Instruments.
All trademarks are the property of their respective owners.

10.5 Electrostatic Discharge Caution

This integrated circuit can be damaged by ESD. Texas Instruments recommends that all integrated circuits be handled with appropriate precautions. Failure to observe proper handling and installation procedures can cause damage.

ESD damage can range from subtle performance degradation to complete device failure. Precision integrated circuits may be more susceptible to damage because very small parametric changes could cause the device not to meet its published specifications.

10.6 Glossary

TI Glossary	This glossary lists and explains terms, acronyms, and definitions.

11 Revision History

NOTE: Page numbers for previous revisions may differ from page numbers in the current version.

Changes from Revision C (November 2019) to Revision D (February 2024)	Page
• Updated the numbering format for tables, figures, and cross-references throughout the document	1
• Updated Is or Id (Continuous Current) values	4
• Added Ipeak values to *Recommended Operating Conditions* table	4

Changes from Revision B (August 2019) to Revision C (November 2019)	Page
• Added links in the applications section	1
• Added setting for TMUX1101 and TMUX1102 DBV package RTM	1

Copyright © 2024 Texas Instruments Incorporated

Changes from Revision A (March 2019) to Revision B (August 2019)	Page
• Deleted the *Product Preview* note from the *Device Information* table	1
• Deleted the *Product Preview* note from the *Device Comparison* table	2
• Added DBV (SOT-23) thermal values to *Thermal Information*	5

Changes from Revision * (March 2019) to Revision A (July 2019)	Page
• Changed the document From: *Advanced Information* To: *Mixed* Status.	1

12 Mechanical, Packaging, and Orderable Information

The following pages include mechanical, packaging, and orderable information. This information is the most current data available for the designated devices. This data is subject to change without notice and revision of this document. For browser-based versions of this data sheet, refer to the left-hand navigation.

PACKAGING INFORMATION

Orderable part number	Status (1)	Material type (2)	Package | Pins	Package qty | Carrier	RoHS (3)	Lead finish/ Ball material (4)	MSL rating/ Peak reflow (5)	Op temp (°C)	Part marking (6)
TMUX1101DBVR	Active	Production	SOT-23 (DBV) | 5	3000 | LARGE T&R	Yes	NIPDAU | SN	Level-1-260C-UNLIM	-40 to 125	1W1F
TMUX1101DBVR.A	Active	Production	SOT-23 (DBV) | 5	3000 | LARGE T&R	Yes	NIPDAU	Level-1-260C-UNLIM	-40 to 125	1W1F
TMUX1101DBVRG4	Active	Production	SOT-23 (DBV) | 5	3000 | LARGE T&R	Yes	NIPDAU	Level-1-260C-UNLIM	-40 to 125	1W1F
TMUX1101DBVRG4.A	Active	Production	SOT-23 (DBV) | 5	3000 | LARGE T&R	Yes	NIPDAU	Level-1-260C-UNLIM	-40 to 125	1W1F
TMUX1101DCKR	Active	Production	SC70 (DCK) | 5	3000 | LARGE T&R	Yes	NIPDAU	Level-1-260C-UNLIM	-40 to 125	101
TMUX1101DCKR.A	Active	Production	SC70 (DCK) | 5	3000 | LARGE T&R	Yes	NIPDAU	Level-1-260C-UNLIM	-40 to 125	101
TMUX1101DCKRG4	Active	Production	SC70 (DCK) | 5	3000 | LARGE T&R	Yes	NIPDAU	Level-1-260C-UNLIM	-40 to 125	101
TMUX1101DCKRG4.A	Active	Production	SC70 (DCK) | 5	3000 | LARGE T&R	Yes	NIPDAU	Level-1-260C-UNLIM	-40 to 125	101
TMUX1102DBVR	Active	Production	SOT-23 (DBV) | 5	3000 | LARGE T&R	Yes	NIPDAU | SN	Level-1-260C-UNLIM	-40 to 125	1W3F
TMUX1102DBVR.A	Active	Production	SOT-23 (DBV) | 5	3000 | LARGE T&R	Yes	SN	Level-1-260C-UNLIM	-40 to 125	1W3F
TMUX1102DCKR	Active	Production	SC70 (DCK) | 5	3000 | LARGE T&R	Yes	NIPDAU	Level-1-260C-UNLIM	-40 to 125	102
TMUX1102DCKR.A	Active	Production	SC70 (DCK) | 5	3000 | LARGE T&R	Yes	NIPDAU	Level-1-260C-UNLIM	-40 to 125	102

(1) **Status:** For more details on status, see our product life cycle.

(2) **Material type:** When designated, preproduction parts are prototypes/experimental devices, and are not yet approved or released for full production. Testing and final process, including without limitation quality assurance, reliability performance testing, and/or process qualification, may not yet be complete, and this item is subject to further changes or possible discontinuation. If available for ordering, purchases will be subject to an additional waiver at checkout, and are intended for early internal evaluation purposes only. These items are sold without warranties of any kind.

(3) **RoHS values:** Yes, No, RoHS Exempt. See the TI RoHS Statement for additional information and value definition.

(4) **Lead finish/Ball material:** Parts may have multiple material finish options. Finish options are separated by a vertical ruled line. Lead finish/Ball material values may wrap to two lines if the finish value exceeds the maximum column width.

(5) **MSL rating/Peak reflow:** The moisture sensitivity level ratings and peak solder (reflow) temperatures. In the event that a part has multiple moisture sensitivity ratings, only the lowest level per JEDEC standards is shown. Refer to the shipping label for the actual reflow temperature that will be used to mount the part to the printed circuit board.

(6) **Part marking:** There may be an additional marking, which relates to the logo, the lot trace code information, or the environmental category of the part.

Multiple part markings will be inside parentheses. Only one part marking contained in parentheses and separated by a "~" will appear on a part. If a line is indented then it is a continuation of the previous line and the two combined represent the entire part marking for that device.

Important Information and Disclaimer: The information provided on this page represents TI's knowledge and belief as of the date that it is provided. TI bases its knowledge and belief on information provided by third parties, and makes no representation or warranty as to the accuracy of such information. Efforts are underway to better integrate information from third parties. TI has taken and continues to take reasonable steps to provide representative and accurate information but may not have conducted destructive testing or chemical analysis on incoming materials and chemicals. TI and TI suppliers consider certain information to be proprietary, and thus CAS numbers and other limited information may not be available for release.

In no event shall TI's liability arising out of such information exceed the total purchase price of the TI part(s) at issue in this document sold by TI to Customer on an annual basis.

TAPE AND REEL INFORMATION

REEL DIMENSIONS

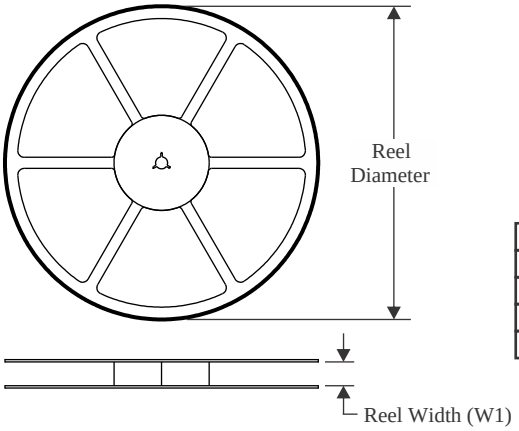

TAPE DIMENSIONS

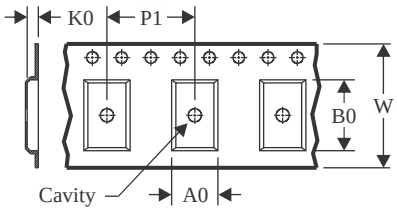

A0	Dimension designed to accommodate the component width
B0	Dimension designed to accommodate the component length
K0	Dimension designed to accommodate the component thickness
W	Overall width of the carrier tape
P1	Pitch between successive cavity centers

QUADRANT ASSIGNMENTS FOR PIN 1 ORIENTATION IN TAPE

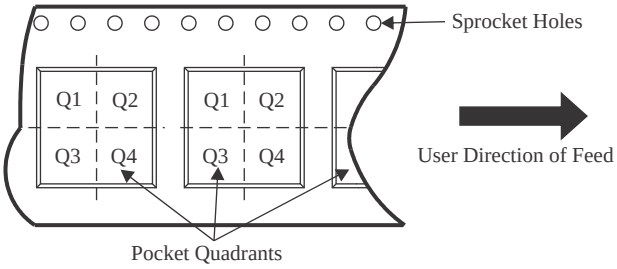

*All dimensions are nominal

Device	Package Type	Package Drawing	Pins	SPQ	Reel Diameter (mm)	Reel Width W1 (mm)	A0 (mm)	B0 (mm)	K0 (mm)	P1 (mm)	W (mm)	Pin1 Quadrant
TMUX1101DBVR	SOT-23	DBV	5	3000	180.0	8.4	3.2	3.2	1.4	4.0	8.0	Q3
TMUX1101DBVRG4	SOT-23	DBV	5	3000	180.0	8.4	3.2	3.2	1.4	4.0	8.0	Q3
TMUX1101DCKR	SC70	DCK	5	3000	178.0	9.0	2.4	2.5	1.2	4.0	8.0	Q3
TMUX1101DCKRG4	SC70	DCK	5	3000	178.0	9.0	2.4	2.5	1.2	4.0	8.0	Q3
TMUX1102DBVR	SOT-23	DBV	5	3000	180.0	8.4	3.2	3.2	1.4	4.0	8.0	Q3
TMUX1102DCKR	SC70	DCK	5	3000	178.0	9.0	2.4	2.5	1.2	4.0	8.0	Q3

TAPE AND REEL BOX DIMENSIONS

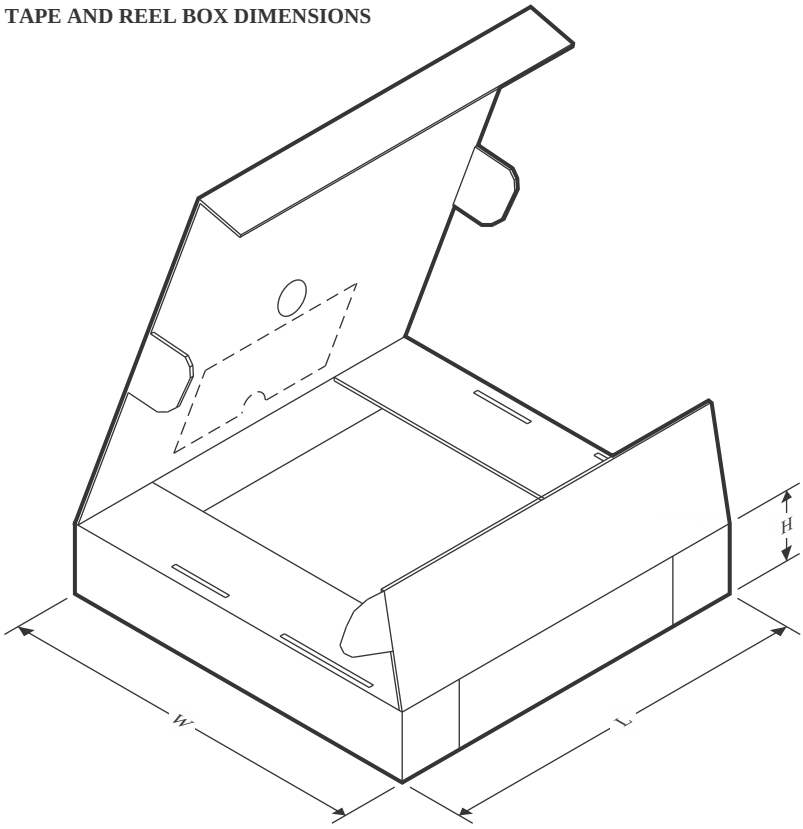

*All dimensions are nominal

Device	Package Type	Package Drawing	Pins	SPQ	Length (mm)	Width (mm)	Height (mm)
TMUX1101DBVR	SOT-23	DBV	5	3000	210.0	185.0	35.0
TMUX1101DBVRG4	SOT-23	DBV	5	3000	210.0	185.0	35.0
TMUX1101DCKR	SC70	DCK	5	3000	180.0	180.0	18.0
TMUX1101DCKRG4	SC70	DCK	5	3000	180.0	180.0	18.0
TMUX1102DBVR	SOT-23	DBV	5	3000	210.0	185.0	35.0
TMUX1102DCKR	SC70	DCK	5	3000	180.0	180.0	18.0

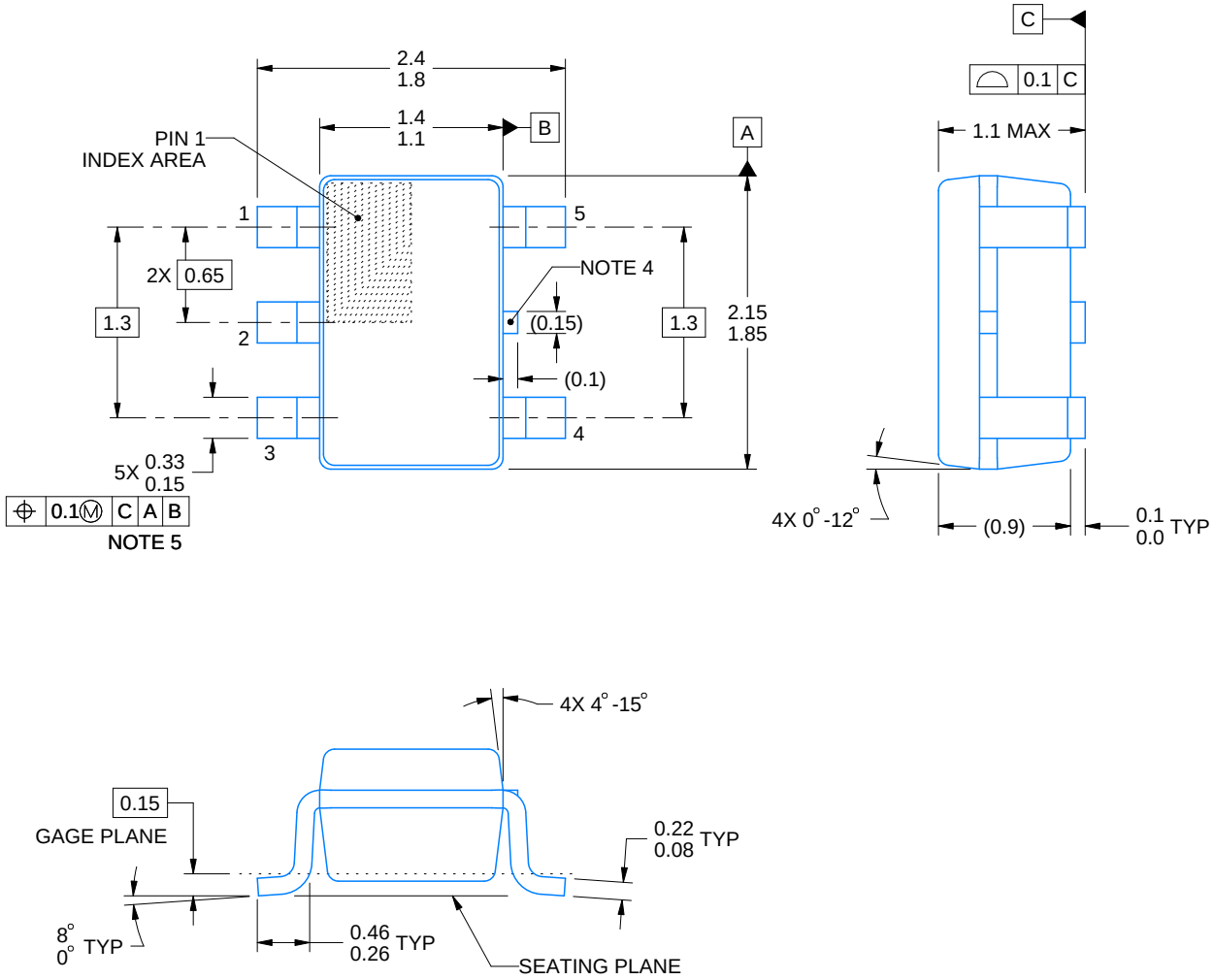

NOTES:

1. All linear dimensions are in millimeters. Any dimensions in parenthesis are for reference only. Dimensioning and tolerancing per ASME Y14.5M.
2. This drawing is subject to change without notice.
3. Refernce JEDEC MO-203.
4. Support pin may differ or may not be present.
5. Lead width does not comply with JEDEC.
6. Body dimensions do not include mold flash, protrusions, or gate burrs. Mold flash, protrusions, or gate burrs shall not exceed 0.25mm per side

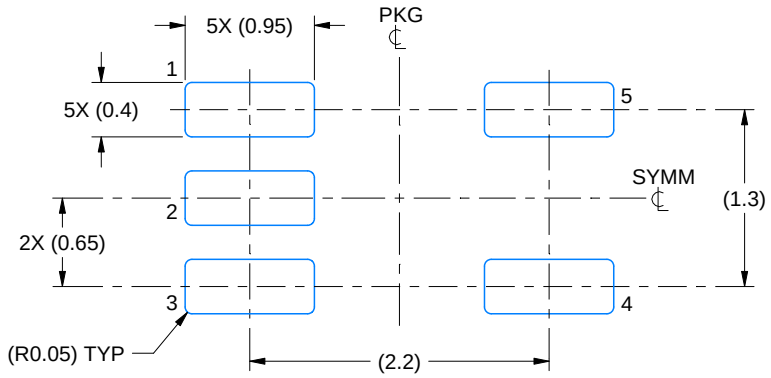

LAND PATTERN EXAMPLE
EXPOSED METAL SHOWN
SCALE:18X

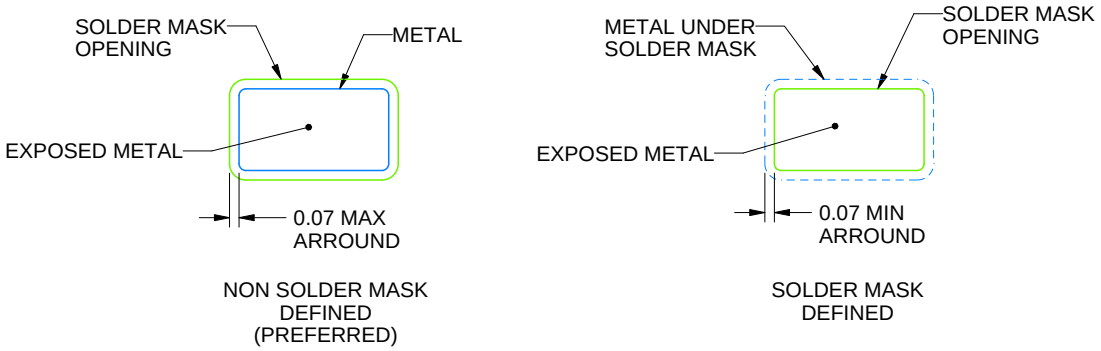

SOLDER MASK DETAILS

4214834/G 11/2024

NOTES: (continued)

7. Publication IPC-7351 may have alternate designs.
8. Solder mask tolerances between and around signal pads can vary based on board fabrication site.

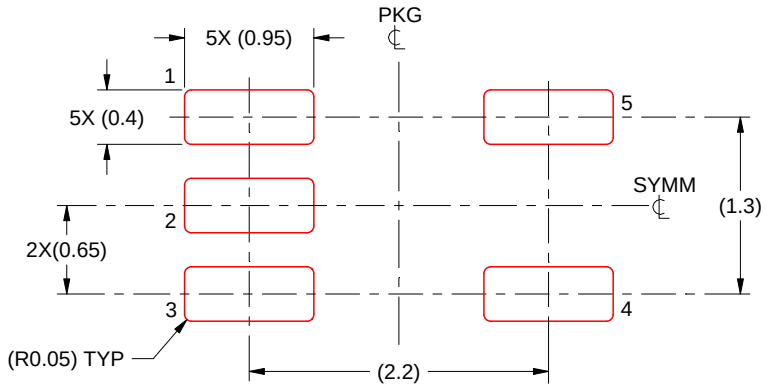

SOLDER PASTE EXAMPLE
BASED ON 0.125 THICK STENCIL
SCALE:18X

4214834/G 11/2024

NOTES: (continued)

9. Laser cutting apertures with trapezoidal walls and rounded corners may offer better paste release. IPC-7525 may have alternate design recommendations.
10. Board assembly site may have different recommendations for stencil design.

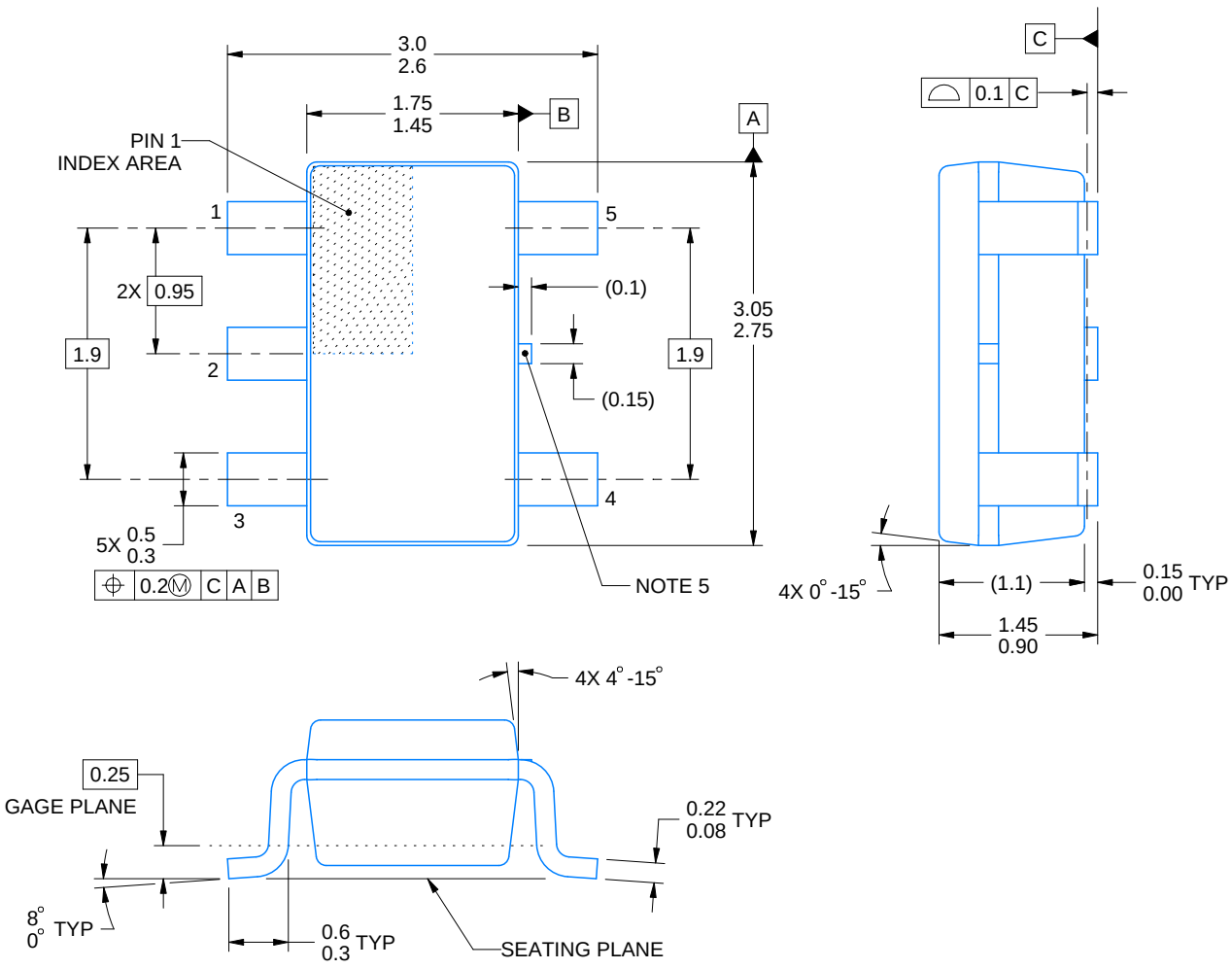

4214839/K 08/2024

NOTES:

1. All linear dimensions are in millimeters. Any dimensions in parenthesis are for reference only. Dimensioning and tolerancing per ASME Y14.5M.
2. This drawing is subject to change without notice.
3. Refernce JEDEC MO-178.
4. Body dimensions do not include mold flash, protrusions, or gate burrs. Mold flash, protrusions, or gate burrs shall not exceed 0.25 mm per side.
5. Support pin may differ or may not be present.

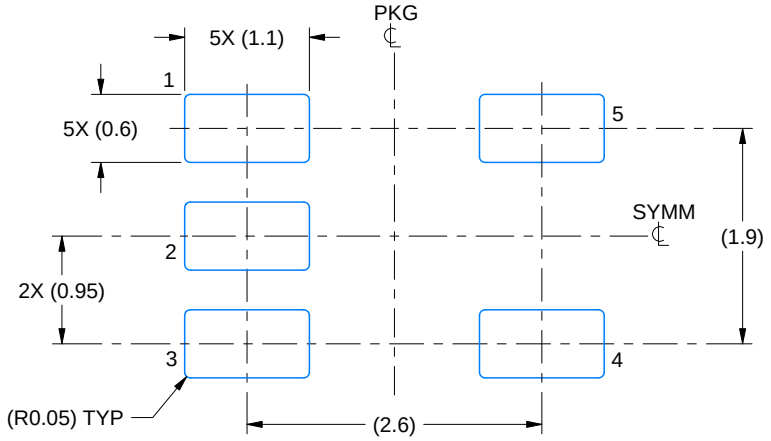

LAND PATTERN EXAMPLE
EXPOSED METAL SHOWN
SCALE:15X

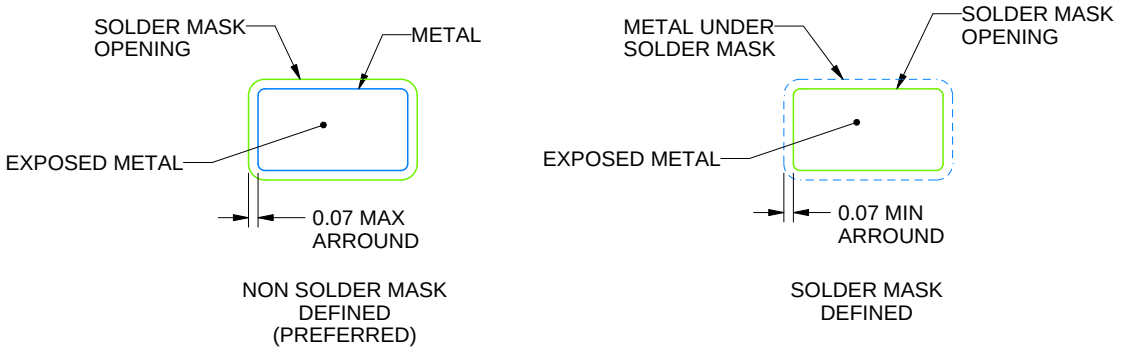

SOLDER MASK DETAILS

4214839/K 08/2024

NOTES: (continued)

6. Publication IPC-7351 may have alternate designs.
7. Solder mask tolerances between and around signal pads can vary based on board fabrication site.

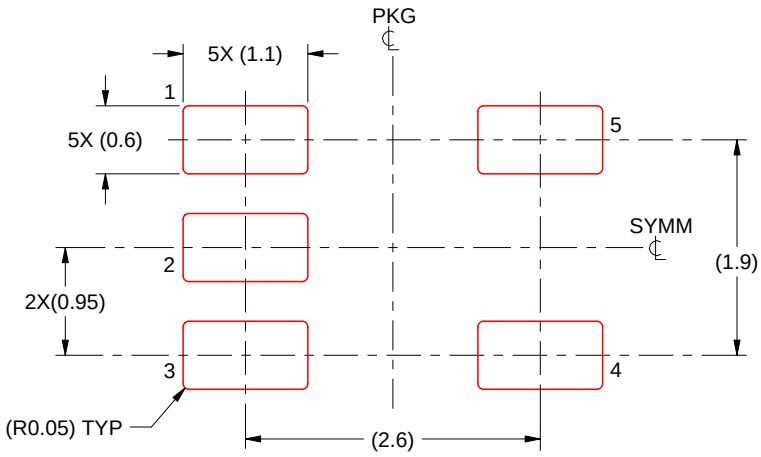

SOLDER PASTE EXAMPLE
BASED ON 0.125 mm THICK STENCIL
SCALE:15X

4214839/K 08/2024

NOTES: (continued)

8. Laser cutting apertures with trapezoidal walls and rounded corners may offer better paste release. IPC-7525 may have alternate design recommendations.
9. Board assembly site may have different recommendations for stencil design.

IMPORTANT NOTICE AND DISCLAIMER

TI PROVIDES TECHNICAL AND RELIABILITY DATA (INCLUDING DATA SHEETS), DESIGN RESOURCES (INCLUDING REFERENCE DESIGNS), APPLICATION OR OTHER DESIGN ADVICE, WEB TOOLS, SAFETY INFORMATION, AND OTHER RESOURCES “AS IS” AND WITH ALL FAULTS, AND DISCLAIMS ALL WARRANTIES, EXPRESS AND IMPLIED, INCLUDING WITHOUT LIMITATION ANY IMPLIED WARRANTIES OF MERCHANTABILITY, FITNESS FOR A PARTICULAR PURPOSE OR NON-INFRINGEMENT OF THIRD PARTY INTELLECTUAL PROPERTY RIGHTS.

These resources are intended for skilled developers designing with TI products. You are solely responsible for (1) selecting the appropriate TI products for your application, (2) designing, validating and testing your application, and (3) ensuring your application meets applicable standards, and any other safety, security, regulatory or other requirements.

These resources are subject to change without notice. TI grants you permission to use these resources only for development of an application that uses the TI products described in the resource. Other reproduction and display of these resources is prohibited. No license is granted to any other TI intellectual property right or to any third party intellectual property right. TI disclaims responsibility for, and you will fully indemnify TI and its representatives against, any claims, damages, costs, losses, and liabilities arising out of your use of these resources.

TI’s products are provided subject to TI’s Terms of Sale or other applicable terms available either on ti.com or provided in conjunction with such TI products. TI’s provision of these resources does not expand or otherwise alter TI’s applicable warranties or warranty disclaimers for TI products.

TI objects to and rejects any additional or different terms you may have proposed.

Mailing Address: Texas Instruments, Post Office Box 655303, Dallas, Texas 75265
Copyright © 2025, Texas Instruments Incorporated