TLx84xB High-Performance Current-Mode Pwm Controllers

1 Features

- Low Start-Up Current (<0.5mA)
- Trimmed Oscillator Discharge Current
- Current Mode Operation to 500kHz
- Automatic Feed-Forward Compensation
- Latching PWM for Cycle-by-Cycle Current Limiting
- Internally Trimmed Reference With Undervoltage Lockout
- High-Current Totem-Pole Output Undervoltage Lockout With Hysteresis
- Double-Pulse Suppression

2 Applications

- Switching regulators of any polarity
- Transformer-coupled DC/DC convertors

3 Description

The TL284xB and TL384xB series of control integrated circuits provide the features that are necessary to implement off-line or dc-to-dc fixed-frequency current-mode control schemes, with a minimum number of external components. Internally implemented circuits include an undervoltage lockout (UVLO) and a precision reference that is trimmed for accuracy at the error amplifier input. Other internal circuits include logic to ensure latched operation, a pulse-width modulation (PWM) comparator that also provides current-limit control, and a totem-pole output stage designed to source or sink high-peak current. The output stage, suitable for driving N-channel MOSFETs, is low when the output stage is in the off state.

The TL284xB and TL384xB series are pin compatible with the standard TL284x and TL384x with the following improvements. The start-up current is specified to be 0.5mA (max), while the oscillator discharge current is trimmed to 8.3mA (typ). In addition, during undervoltage lockout conditions, the output has a maximum saturation voltage of 1.2V while sinking 10mA (V_{CC} = 5V).

Major differences between members of these series are the UVLO thresholds and maximum duty-cycle ranges. Typical UVLO thresholds of 16V (on) and 10V (off) on the TLx842B and TLx844B devices make them ideally suited to off-line applications. The corresponding typical thresholds for the TLx843B and TLx845B devices are 8.4V (on) and 7.6V (off). The TLx842B and TLx843B devices can operate to duty cycles approaching 100%. A duty-cycle range of 0% to 50% is obtained by the TLx844B and TLx845B by the addition of an internal toggle flip-flop, which blanks the output off every other clock cycle. The TL284xB-series devices are characterized for operation from –40°C to 85°C. The TL384xB-series devices are characterized for operation from 0°C to 70°C.

Package Information

PART NUMBER	PACKAGE(1)	PACKAGE SIZE(2)
TLx84x	D (SOIC, 8)	4.90mm × 6.00mm
	D (SOIC, 14)	8.65mm × 6.00mm
	P (PDIP, 8)	9.81mm × 9.43mm

(1) For all available packages, see the orderable addendum at the end of the data sheet.
(2) The package size (length × width) is a nominal value and includes pins, where applicable.

D (SOIC) OR P (PDIP) PACKAGE
(TOP VIEW)

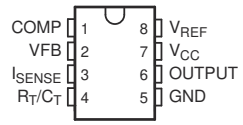

D (SOIC) PACKAGE
(TOP VIEW)

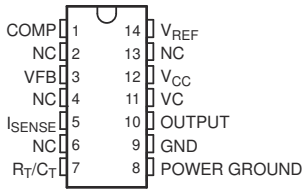

NC – No internal connection

An IMPORTANT NOTICE at the end of this data sheet addresses availability, warranty, changes, use in safety-critical applications, intellectual property matters and other important disclaimers. PRODUCTION DATA.

Table of Contents

1 Features....1
2 Applications....1
3 Description....1
4 Pin Configuration and Functions....3
5 Specifications....4
5.1 Absolute Maximum Ratings....4
5.2 ESD Ratings....4
5.3 Recommended Operating Conditions....4
5.4 Thermal Information....5
5.5 Reference Section Electrical Characteristics....5
5.6 Oscillator Section Electrical Characteristics....5
5.7 Error-Amplifier Section Electrical Characteristics....6
5.8 Current-Sense Section Electrical Characteristics....6
5.9 Output Section Electrical Characteristics....7
5.10 Undervoltage-Lockout Section Electrical Characteristics....7
5.11 Pulse-Width Modulator Section Electrical Characteristics....7
5.12 Supply Voltage Electrical Characteristics....7
5.13 Typical Characteristics....8
6 Detailed Description....13
6.1 Functional Block Diagram....13
7 Application and Implementation....14
7.1 Application Information....14
7.2 Shutdown Technique....15
7.3 Open-Loop Laboratory Test Fixture....16
7.4 Typical Application....16
8 Device and Documentation Support....16
8.1 Related Links....16
8.2 Trademarks....17
8.3 Electrostatic Discharge Caution....17
8.4 Glossary....17
9 Revision History....17
10 Mechanical, Packaging, and Orderable Information....17

Copyright © 2024 Texas Instruments Incorporated

4 Pin Configuration and Functions

D (SOIC) OR P (PDIP) PACKAGE
(TOP VIEW)

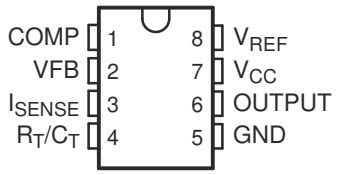

D (SOIC) PACKAGE
(TOP VIEW)

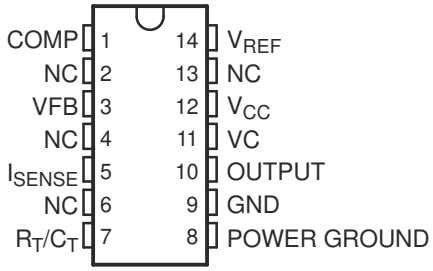

NC – No internal connection

PIN			Type[1]	DESCRIPTION
NAME	D (14 pins)	D or P (8 pins)		
COMP	1	1	I/O	Error amplifier compensation pin
GND	9	5	-	Device power supply ground terminal
ISENSE	5	3	I	Current sense comparator input
NC	2, 4, 6, 13	-	-	Do not connect
OUTPUT	10	6	O	PWM Output
POWER GROUND	8	-	-	Output PWM ground terminal
REF	14	8	O	Oscillator voltage reference
RT/CT	7	4	I/O	Oscillator RC input
VC	11	-	-	Output PWM positive voltage supply
VCC	12	7	-	Device positive voltage supply
VFB	3	2	I	Error amplifier input

(1) I = Input; O = Output; I/O = Input or Output

Copyright © 2024 Texas Instruments Incorporated

5 Specifications

5.1 Absolute Maximum Ratings

over operating free-air temperature range (unless otherwise noted) [(1) (2)]

			MIN	MAX	UNIT
V_{CC}	Supply voltage	Low impedance source		30	V
		I_{CC} < 30 mA		Self limiting	
V_I	Analog input voltage range	VFB and I_{SENSE}	–0.3	6.3	V
I_{CC}	Supply current			30	mA
I_O	Output current			±1	A
$I_{O(sink)}$	Error amplifier output sink current			10	mA
	Output energy	Capacitive load		5	µJ
T_J	Virtual junction temperature			150	°C
T_{stg}	Storage temperature range		–65	150	°C

(1) Operation outside the *Absolute Maximum Ratings* may cause permanent device damage. *Absolute Maximum Ratings* do not imply functional operation of the device at these or any other conditions beyond those listed under *Recommended Operating Conditions*. If used outside the *Recommended Operating Conditions* but within the *Absolute Maximum Ratings*, the device may not be fully functional, and this may affect device reliability, functionality, performance, and shorten the device lifetime.
(2) All voltages are with respect to the device GND terminal.

5.2 ESD Ratings

			VALUE	UNIT
$V_{(ESD)}$	Electrostatic discharge	Human body model (HBM), per ANSI/ESDA/JEDEC JS-001, all pins[(1)]	±3000	V
		Charged device model (CDM), per JEDEC specification JESD22-C101, all pins[(2)]	±2000	

(1) JEDEC document JEP155 states that 500-V HBM allows safe manufacturing with a standard ESD control process.
(2) JEDEC document JEP157 states that 250-V CDM allows safe manufacturing with a standard ESD control process.

5.3 Recommended Operating Conditions

			MIN	NOM	MAX	UNIT
V_{CC}	Supply voltage	V_{CC}			30	V
		VC[(1)]			30	
V_I	Input voltage	R_T/C_T	0		5.5	V
		VFB and I_{SENSE}	0		5.5	
V_O	Output voltage	OUTPUT	0		30	V
		POWER GROUND[(1)]	–0.1		1	
I_{CC}	Supply current, externally limited				25	mA
I_O	Average output current				200	mA
$I_{O(ref)}$	Reference output current				–20	mA
f_{osc}	Oscillator frequency			100	500	kHz
T_J	Operating free-air temperature	TL284xB	–40		85	°C
		TL384xB	0		70	

(1) The recommended voltages for VC and POWER GROUND apply only to the 14-pin D package.

Copyright © 2024 Texas Instruments Incorporated

5.4 Thermal Information

THERMAL METRIC[1]		TLx84xB			UNIT
		D	P	D	
		8 PINS	8 PINS	14 PINS	
$R_{\theta JA}$	Junction-to-ambient thermal resistance	117.4	74.1	87.9	°C/W

(1) For more information about traditional and new thermal metrics, see the *Semiconductor and IC Package Thermal Metrics* application note.

5.5 Reference Section Electrical Characteristics

V_{CC} = 15 V[1], R_T = 10 kΩ, C_T = 3.3 nF, over recommended operating free-air temperature range (unless otherwise specified)

PARAMETER	TEST CONDITIONS	TL284xB			TL384xB			UNIT
		MIN	TYP[2]	MAX	MIN	TYP[2]	MAX	
Output voltage	I_O = 1 mA, T_J = 25°C	4.95	5	5.05	4.9	5	5.1	V
Line regulation	V_{CC} = 12 V to 25 V		6	20		6	20	mV
Load regulation	I_O = 1 mA to 20 mA		6	25		6	25	mV
Average temperature coefficient of output voltage			0.2	0.4		0.2	0.4	mV/°C
Output voltage, worst-case variation	V_{CC} = 12 V to 25 V, I_O = 1 mA to 20 mA	4.9		5.1	4.82		5.18	V
Output noise voltage	f = 10 Hz to 10 kHz, T_J = 25°C		50			50		µV
Output-voltage long-term drift	After 1000 h at T_J = 25°C		5	25		5	25	mV
Short-circuit output current		–30	–100	–180	–30	–100	–180	mA

(1) Adjust V_{CC} above the start threshold before setting V_{CC} to 15 V.
(2) All typical values are at T_J = 25°C.

5.6 Oscillator Section Electrical Characteristics

V_{CC} = 15 V[1], R_T = 10 kΩ, C_T = 3.3 nF, over recommended operating free-air temperature range (unless otherwise specified)[3]

PARAMETER	TEST CONDITIONS	TL284xB			TL384xB			UNIT
		MIN	TYP[2]	MAX	MIN	TYP[2]	MAX	
Initial accuracy	T_J = 25°C	47	52	57	47	52	57	kHz
	T_A = T_{low} to T_{high}	44		60	44		60	
	T_J = 25°C, R_T = 6.2 kΩ, C_T = 1 nF	225	250	275	225	250	275	
Voltage stability	V_{CC} = 12 V to 25 V		0.2	1		0.2	1	%
Temperature stability			5			5		%
Amplitude	Peak to peak		1.7			1.7		V
Discharge current	T_J = 25°C, R_T/C_T = 2 V	7.8	8.3	8.8	7.8	8.3	8.8	mA
	R_T/C_T = 2 V	7.5		8.8	7.6		8.8	

(1) Adjust V_{CC} above the start threshold before setting it to 15 V.
(2) All typical values are at T_J = 25°C.
(3) Output frequency equals oscillator frequency for the TL3842B and TL3843B. Output frequency is one-half the oscillator frequency for the TL3844B and TL3845B.

Copyright © 2024 Texas Instruments Incorporated

5.7 Error-Amplifier Section Electrical Characteristics

V_{CC} = 15 V[1], R_T = 10 kΩ, C_T = 3.3 nF, over recommended operating free-air temperature range (unless otherwise specified)

PARAMETER	TEST CONDITIONS	TL284xB			TL384xB			UNIT
		MIN	TYP[2]	MAX	MIN	TYP[2]	MAX	
Feedback input voltage	COMP = 2.5 V	2.45	2.5	2.55	2.42	2.5	2.58	V
Input bias current			–0.3	–1		–0.3	–2	μA
Open-loop voltage amplification	V_O = 2 V to 4 V	65	90		65	90		dB
Gain-bandwidth product		0.7	1		0.7	1		MHz
Supply-voltage rejection ratio	V_{CC} = 12 V to 25 V	60	70		60	70		dB
Output sink current	VFB = 2.7 V, COMP = 1.1 V	2	6		2	6		mA
Output source current	VFB = 2.3 V, COMP = 5 V	–0.5	–0.8		–0.5	–0.8		mA
High-level output voltage	VFB = 2.3 V, R_L = 15 kΩ to GND	5	6		5	6		V
Low-level output voltage	VFB = 2.7 V, R_L = 15 kΩ to GND		0.7	1.1		0.7	1.1	V

(1) Adjust V_{CC} above the start threshold before setting it to 15 V.
(2) All typical values are at T_J = 25°C.

5.8 Current-Sense Section Electrical Characteristics

V_{CC} = 15 V[4], R_T = 10 kΩ, C_T = 3.3 nF, over recommended operating free-air temperature range (unless otherwise specified)

PARAMETER	TEST CONDITIONS	TL284xB			TL384xB			UNIT
		MIN	TYP[1]	MAX	MIN	TYP[1]	MAX	
Voltage amplification[2] [3]		2.85	3	3.15	2.85	3	3.15	V/V
Current-sense comparator threshold[2]	COMP = 5 V	0.9	1	1.1	0.9	1	1.1	V
Supply-voltage rejection ratio[2]	V_{CC} = 12 V to 25 V		70			70		dB
Input bias current			–2	–10		–2	–10	μA
Delay time to output	VFB = 0 V to 2 V		150	300		150	300	ns

(1) All typical values are at T_J = 25°C.
(2) Measured at the trip point of the latch, with VFB at 0 V.
(3) Measured between I_{SENSE} and COMP, with the input changing from 0 V to 0.8 V.
(4) Adjust V_{CC} above the start threshold before setting V_{CC} to 15 V.

Copyright © 2024 Texas Instruments Incorporated

5.9 Output Section Electrical Characteristics

V_{CC} = 15 V[(2)], R_T = 10 kΩ, C_T = 3.3 nF, over recommended operating free-air temperature range (unless otherwise specified)

PARAMETER	TEST CONDITIONS	TL284xB			TL384xB			UNIT
		MIN	TYP[(1)]	MAX	MIN	TYP[(1)]	MAX	
High-level output voltage	I_{OH} = –20 mA	13	13.5		13	13.5		V
	I_{OH} = –200 mA	12	13.5		12	13.5		
Low-level output voltage	I_{OL} = 20 mA		0.1	0.4		0.1	0.4	V
	I_{OL} = 200 mA		1.5	2.2		1.5	2.2	
Rise time	C_L = 1 nF, T_J = 25°C		25	150		25	150	ns
Fall time	C_L = 1 nF, T_J = 25°C		25	150		25	150	ns
UVLO saturation	V_{CC} = 5 V, I_{OL} = 1 mA		0.7	1.2		0.7	1.2	V

(1) All typical values are at T_J = 25°C.
(2) Adjust V_{CC} above the start threshold before setting V_{CC} to 15 V.

5.10 Undervoltage-Lockout Section Electrical Characteristics

V_{CC} = 15 V[(2)], R_T = 10 kΩ, C_T = 3.3 nF, over recommended operating free-air temperature range (unless otherwise specified)

PARAMETER	TEST CONDITIONS	TL284xB			TL384xB			UNIT
		MIN	TYP[(1)]	MAX	MIN	TYP[(1)]	MAX	
Start threshold voltage	TLx842B, TLx844B	15	16	17	14.5	16	17.5	V
	TLx843B, TLx845B	7.8	8.4	9	7.8	8.4	9	
Minimum operating voltage after start-up	TLx842B, TLx844B	9	10	11	8.5	10	11.5	V
	TLx843B, TLx845B	7	7.6	8.2	7	7.6	8.2	

(1) All typical values are at T_J = 25°C.
(2) Adjust V_{CC} above the start threshold before setting V_{CC} to 15 V.

5.11 Pulse-Width Modulator Section Electrical Characteristics

V_{CC} = 15 V[(2)], R_T = 10 kΩ, C_T = 3.3 nF, over recommended operating free-air temperature range (unless otherwise specified)

PARAMETER	TEST CONDITIONS	TL284xB			TL384xB			UNIT
		MIN	TYP[(1)]	MAX	MIN	TYP[(1)]	MAX	
Maximum duty cycle	TLx842B, TLx843B	92	96	100	92	96	100	%
	TLx844B, TLx845B	46	48	50	46	48	50	
Minimum duty cycle				0			0	%

(1) All typical values are at T_J = 25°C.
(2) Adjust V_{CC} above the start threshold before setting it to 15 V.

5.12 Supply Voltage Electrical Characteristics

V_{CC} = 15 V[(2)], R_T = 10 kΩ, C_T = 3.3 nF, over recommended operating free-air temperature range (unless otherwise specified)

PARAMETER	TEST CONDITIONS	TL284xB			TL384xB			UNIT
		MIN	TYP[(1)]	MAX	MIN	TYP[(1)]	MAX	
Start-up current			0.3	0.5		0.3	0.5	mA
Operating supply current	VFB and I_{SENSE} at 0 V		11	17		11	17	mA
Limiting voltage	I_{CC} = 25 mA	30	39		30	39		V

(1) All typical values are at T_J = 25°C.
(2) Adjust V_{CC} above the start threshold before setting it to 15 V.

Copyright © 2024 Texas Instruments Incorporated

5.13 Typical Characteristics

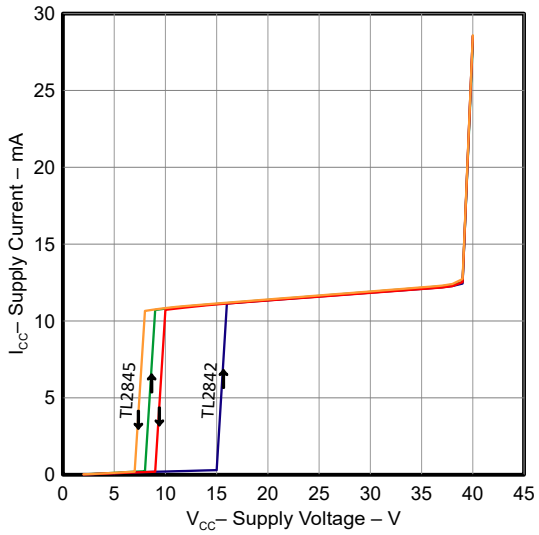

Figure 5-1. Supply Current vs Supply Voltage

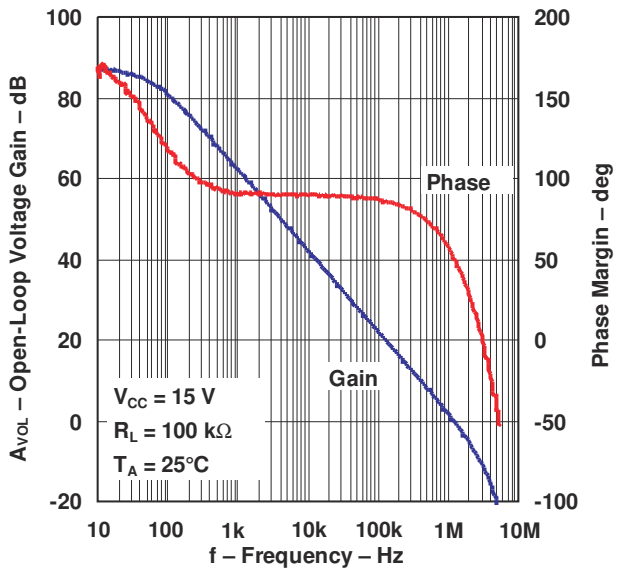

Figure 5-2. Error Amplifier Open-Loop Gain And Phase vs Frequency

Copyright © 2024 Texas Instruments Incorporated

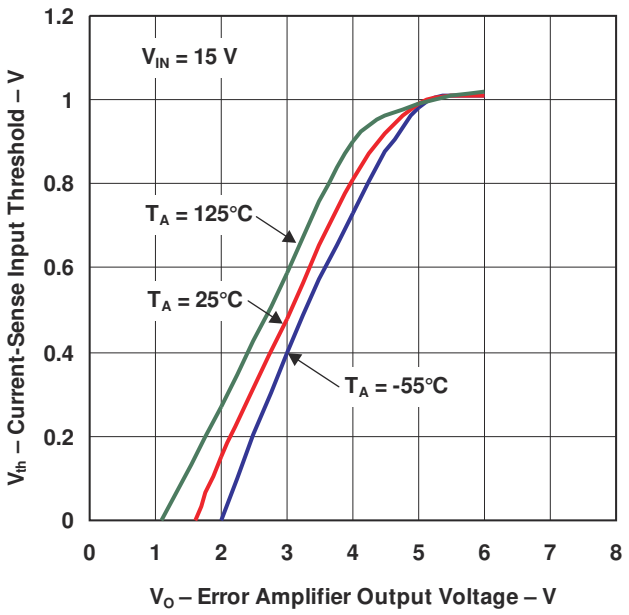

Figure 5-3. Current-Sense Input Threshold vs Error Amplifier Output Voltage

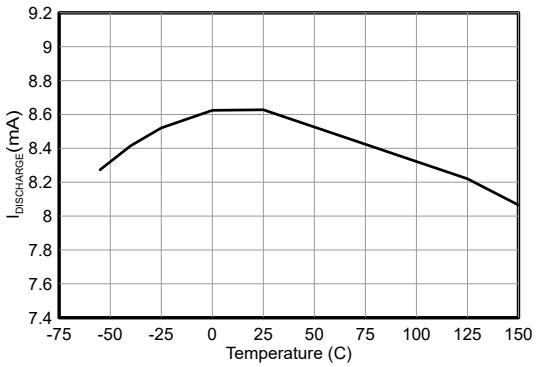

Figure 5-4. Oscillator Discharge Current vs Temperature

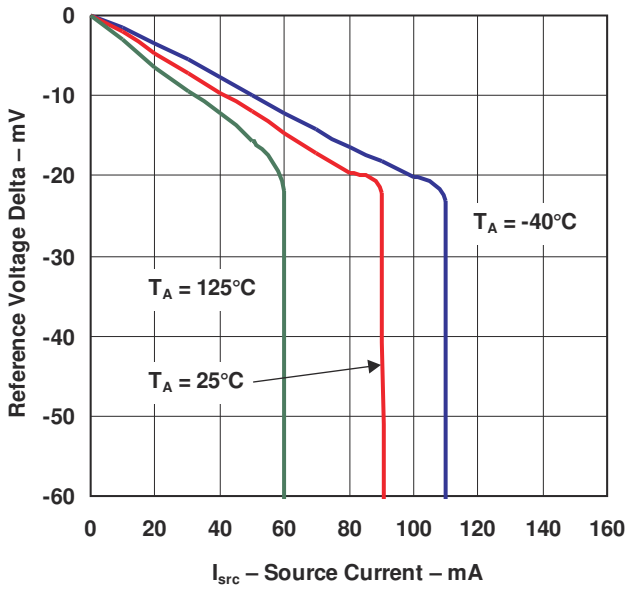

Figure 5-5. Reference Voltage vs Source Current

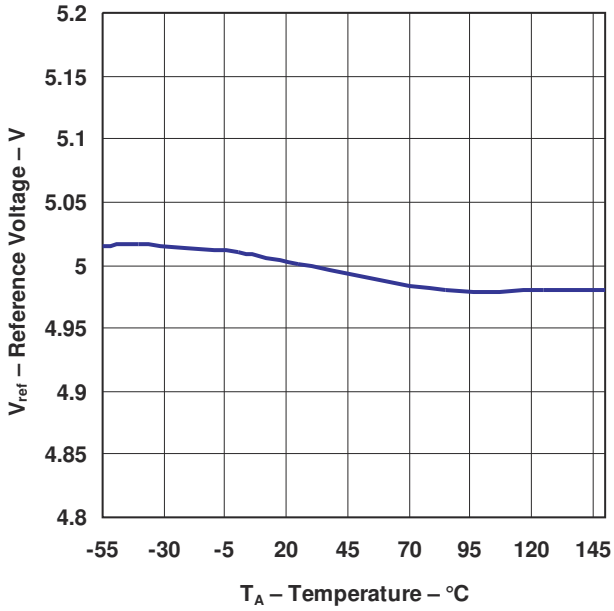

Figure 5-6. Reference Voltage vs Temperature

Copyright © 2024 Texas Instruments Incorporated

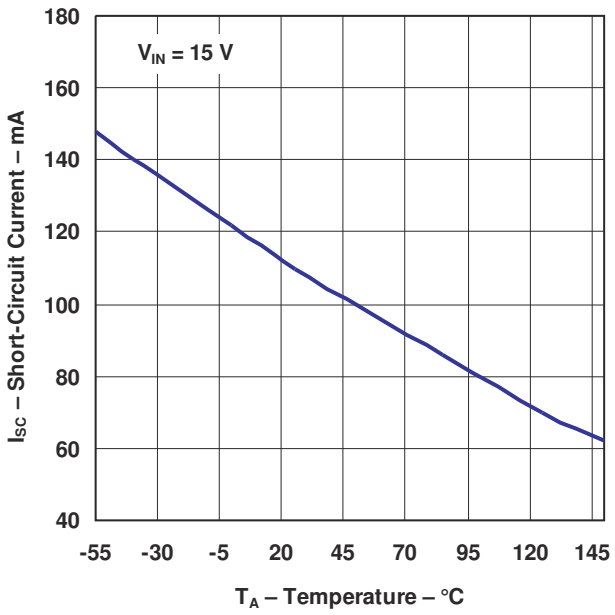

Figure 5-7. Reference Short-Circuit Current vs Temperature

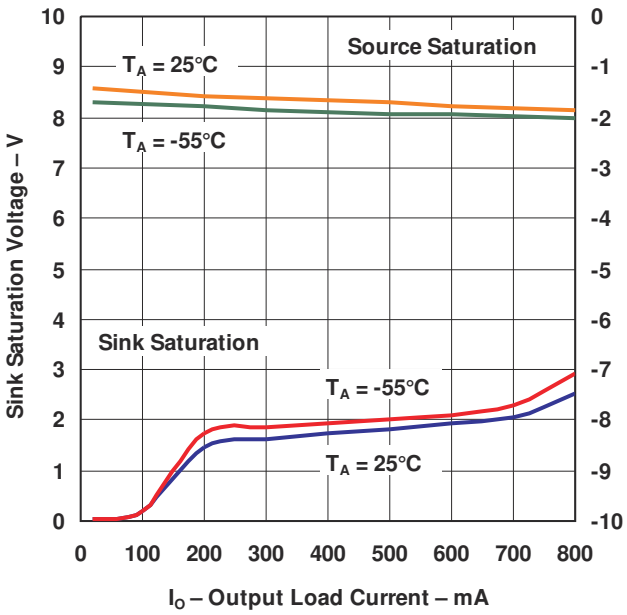

Figure 5-8. Output Saturation Voltage vs Load Current

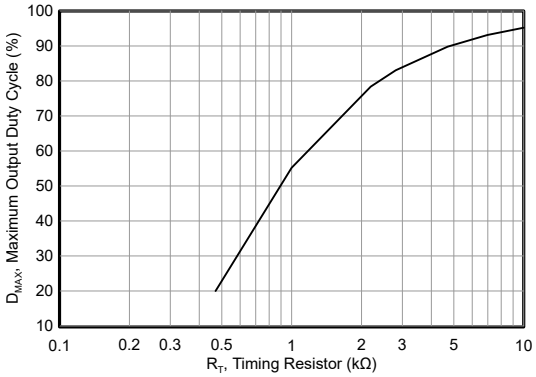

Figure 5-9. Maximum Output Duty Cycle vs Timing Resistor

Copyright © 2024 Texas Instruments Incorporated

6 Detailed Description

6.1 Functional Block Diagram

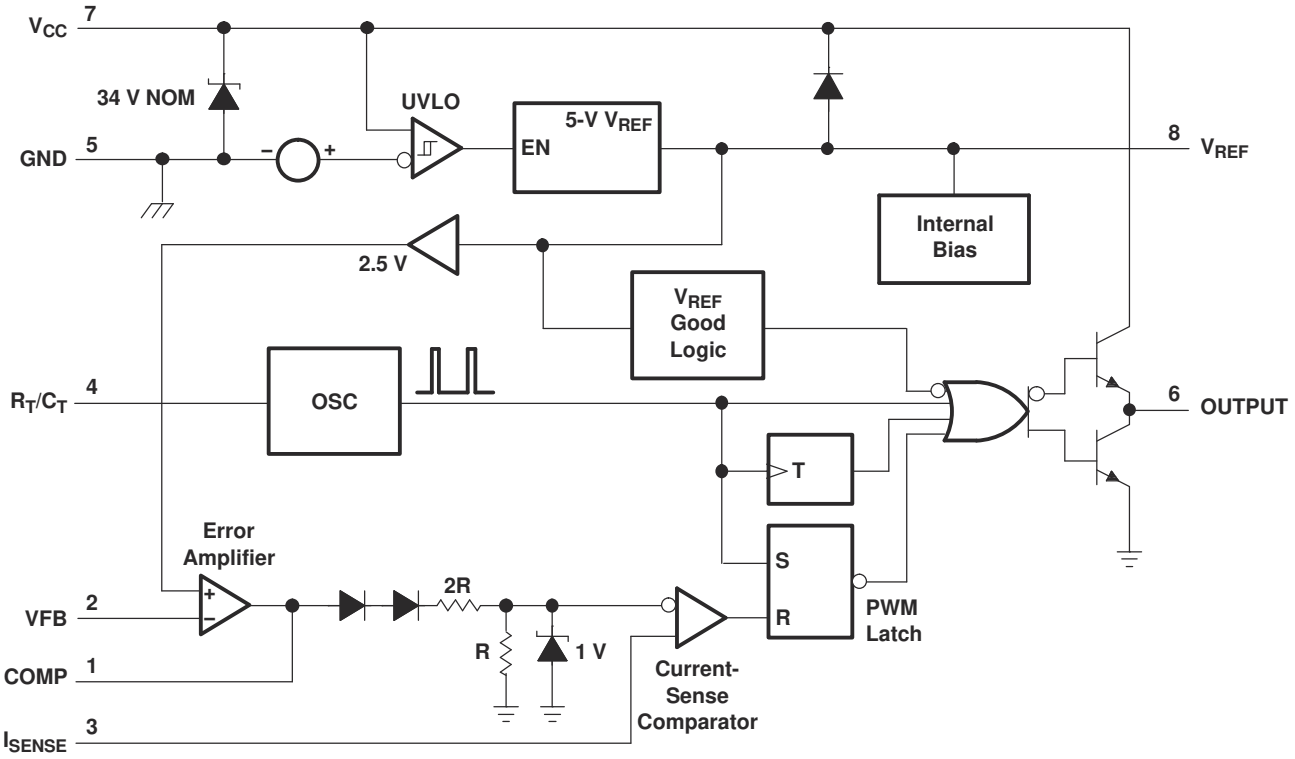

7 Application and Implementation

Note

Information in the following applications sections is not part of the TI component specification, and TI does not warrant its accuracy or completeness. TI's customers are responsible for determining suitability of components for their purposes, as well as validating and testing their design implementation to confirm system functionality.

7.1 Application Information

The error-amplifier configuration circuit is shown in Figure 7-1.

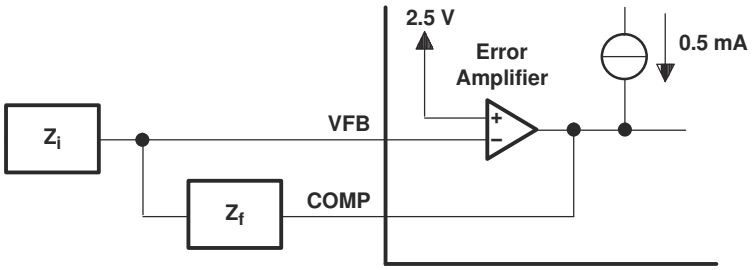

A. Error amplifier can source or sink up to 0.5 mA.

Figure 7-1. Error-Amplifier Configuration

The current-sense circuit is shown in Figure 7-2.

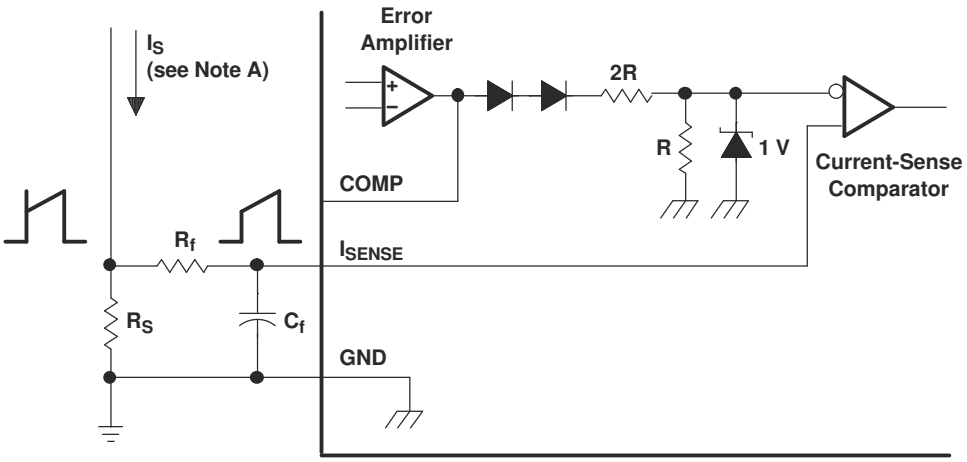

A. Peak current (I_S) is determined by the formula: $I_{S(max)} = 1\ V/R_S$
B. A small RC filter formed by resistor R_f and capacitor C_f may be required to suppress switch transients.

Figure 7-2. Current-Sense Circuit

The oscillator frequency is set using the circuit shown in Figure 7-3. The frequency is calculated as:

$f = 1 / R_T C_T$

For $R_T > 5\ k\Omega$:

$f \approx 1.72 / R_T C_T$

Copyright © 2024 Texas Instruments Incorporated

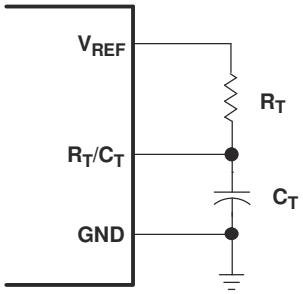

Figure 7-3. Oscillator Section

7.2 Shutdown Technique

The PWM controller (see Figure 7-4) can be shut down by two methods: either raise the voltage at I_{SENSE} above 1 V or pull the COMP terminal below a voltage two diode drops above ground. Either method causes the output of the PWM comparator to be high (refer to block diagram). The PWM latch is reset dominant so that the output remains low until the next clock cycle after the shutdown condition at the COMP or I_{SENSE} terminal is removed. In one example, an externally latched shutdown can be accomplished by adding an SCR that resets by cycling V_{CC} below the lower UVLO threshold. At this point, the reference turns off, allowing the SCR to reset.

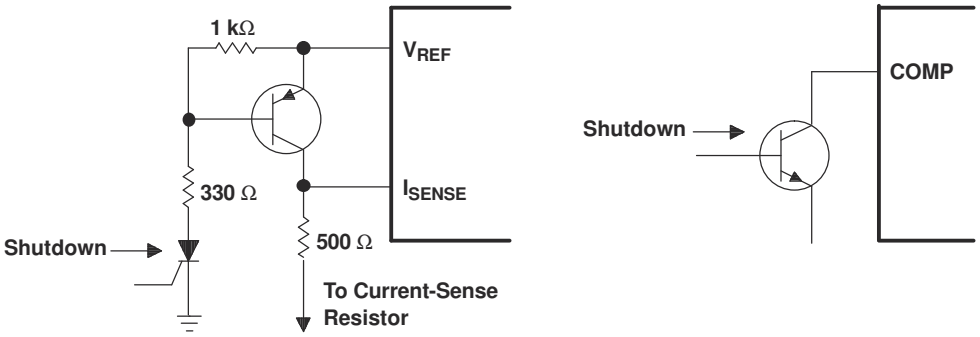

Figure 7-4. Shutdown Techniques

A fraction of the oscillator ramp can be summed resistively with the current-sense signal to provide slope compensation for converters requiring duty cycles over 50% (see Figure 7-5). Note that capacitor C forms a filter with R2 to suppress the leading-edge switch spikes.

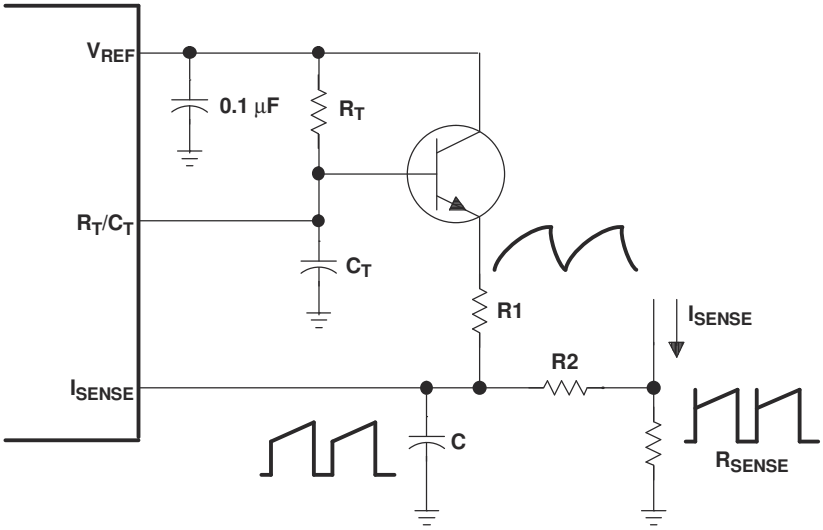

Figure 7-5. Slope Compensation

7.3 Open-Loop Laboratory Test Fixture

In the open-loop laboratory test fixture (see Figure 7-6), high peak currents associated with loads necessitate careful grounding techniques. Timing and bypass capacitors should be connected close to the GND terminal in a single-point ground. The transistor and 5-kΩ potentiometer sample the oscillator waveform and apply an adjustable ramp to the I_{SENSE} terminal.

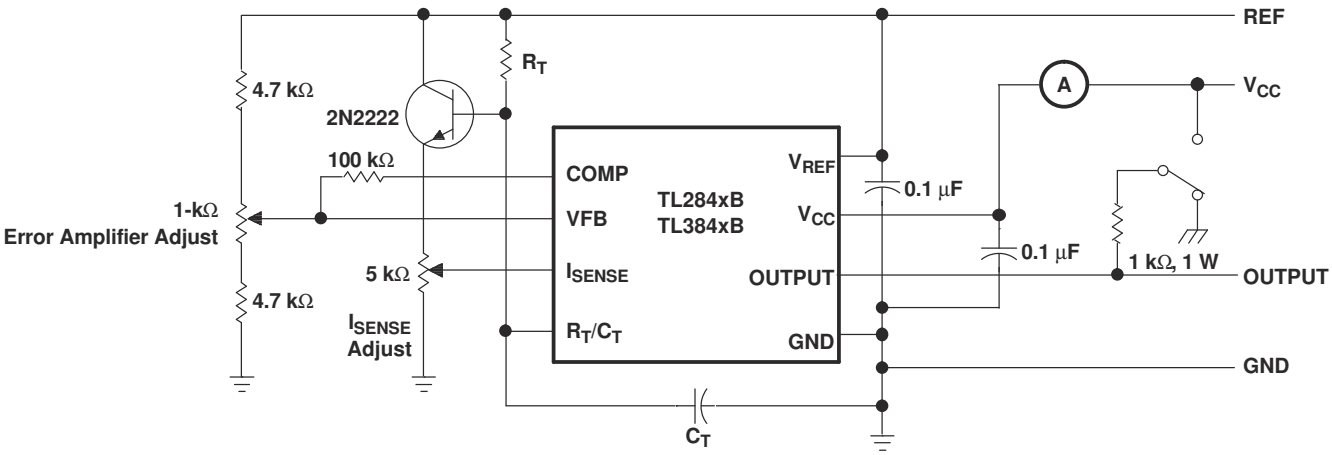

Figure 7-6. Open-Loop Laboratory Test Fixture

7.4 Typical Application

7.4.1 Application Curves

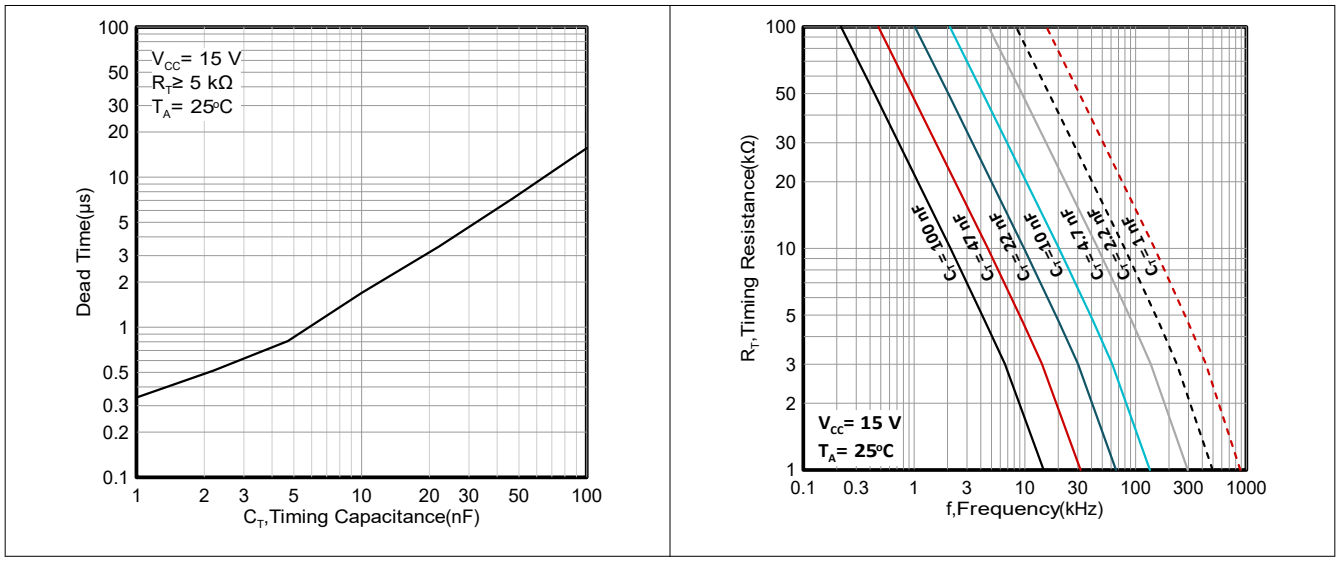

8 Device and Documentation Support

8.1 Related Links

The table below lists quick access links. Categories include technical documents, support and community resources, tools and software, and quick access to sample or buy.

Table 8-1. Related Links

PARTS	PRODUCT FOLDER	SAMPLE & BUY	TECHNICAL DOCUMENTS	TOOLS & SOFTWARE	SUPPORT & COMMUNITY
TL284xB	Click here	Click here	Click here	Click here	Click here

Copyright © 2024 Texas Instruments Incorporated

Table 8-1. Related Links (continued)

PARTS	PRODUCT FOLDER	SAMPLE & BUY	TECHNICAL DOCUMENTS	TOOLS & SOFTWARE	SUPPORT & COMMUNITY
TL384xB	Click here	Click here	Click here	Click here	Click here

8.2 Trademarks

All trademarks are the property of their respective owners.

8.3 Electrostatic Discharge Caution

This integrated circuit can be damaged by ESD. Texas Instruments recommends that all integrated circuits be handled with appropriate precautions. Failure to observe proper handling and installation procedures can cause damage.

ESD damage can range from subtle performance degradation to complete device failure. Precision integrated circuits may be more susceptible to damage because very small parametric changes could cause the device not to meet its published specifications.

8.4 Glossary

TI Glossary This glossary lists and explains terms, acronyms, and definitions.

9 Revision History

Changes from Revision B (July, 2007) to Revision C (October, 2024) **Page**

- Updated the numbering format for tables, figures, and cross-references throughout the document..... 1
- Changed ESD ratings, CDM rating from ±3000V to ±2000V.....4
- Changed thermal information for D-8, D-14, and P-8 packages..... 5
- Changed Electrical Char. table, TOTAL STANDBY CURRENT, VCC Zener voltage, typical value from 34V to 39V..... 5
- Changed in Electrical Char. table, Oscillator Section: at Tj=25C, min. value from 49kHz to 47kHz, max. value from 55kHz to 57kHz.....5
- Changed in Electrical Char. table, Oscillator Section: at TA=Tlow to Thigh, min. value from 48kHz to 44kHz, max. value from 56kHz to 60kHz.....5
- Changed in Electrical Char. table, OUTPUT Section: Rise and fall time, typical value from 50ns to 25ns..... 7
- Changed in Electrical Char. table, PWM: maximum duty cycle of TLx842/3B, minimum value from 94% to 92%.....7
- Changed in Electrical Char. table, PWM: maximum duty cycle of TLx844/5B, minimum value from 47% to 46%.....7
- Changed Part numbers edited.....7
- Updated the *Typical Characteristics* graphs for $I_{discharge}$ and Ta, I_{VCC}-V_{cc}, and D_{max} and Rt.....8
- Updated Application Curves for tdeadtime-Ct and Rt-f..... 16

10 Mechanical, Packaging, and Orderable Information

The following pages include mechanical, packaging, and orderable information. This information is the most current data available for the designated devices. This data is subject to change without notice and revision of this document. For browser-based versions of this data sheet, refer to the left-hand navigation.

PACKAGING INFORMATION

Orderable part number	Status (1)	Material type (2)	Package | Pins	Package qty | Carrier	RoHS (3)	Lead finish/ Ball material (4)	MSL rating/ Peak reflow (5)	Op temp (°C)	Part marking (6)
TL2842BD	Obsolete	Production	SOIC (D) | 14	-	-	Call TI	Call TI	-40 to 85	TL2842B
TL2842BD-8	Obsolete	Production	SOIC (D) | 8	-	-	Call TI	Call TI	-40 to 85	2842B
TL2842BDR	Active	Production	SOIC (D) | 14	2500 | LARGE T&R	Yes	NIPDAU | NIPDAU	Level-1-260C-UNLIM	-40 to 85	TL2842B
TL2842BDR-8	Active	Production	SOIC (D) | 8	2500 | LARGE T&R	Yes	NIPDAU	Level-1-260C-UNLIM	-40 to 85	2842B
TL2842BDR-8.A	Active	Production	SOIC (D) | 8	2500 | LARGE T&R	Yes	NIPDAU	Level-1-260C-UNLIM	-40 to 85	2842B
TL2842BDR.A	Active	Production	SOIC (D) | 14	2500 | LARGE T&R	Yes	NIPDAU	Level-1-260C-UNLIM	-40 to 85	TL2842B
TL2842BP	Active	Production	PDIP (P) | 8	50 | TUBE	Yes	NIPDAU	N/A for Pkg Type	-40 to 85	TL2842BP
TL2842BP.A	Active	Production	PDIP (P) | 8	50 | TUBE	Yes	NIPDAU	N/A for Pkg Type	-40 to 85	TL2842BP
TL2843BD	Obsolete	Production	SOIC (D) | 14	-	-	Call TI	Call TI	-40 to 85	TL2843B
TL2843BD-8	Obsolete	Production	SOIC (D) | 8	-	-	Call TI	Call TI	-40 to 85	2843B
TL2843BDR	Active	Production	SOIC (D) | 14	2500 | LARGE T&R	Yes	NIPDAU | NIPDAU	Level-1-260C-UNLIM	-40 to 85	TL2843B
TL2843BDR-8	Active	Production	SOIC (D) | 8	2500 | LARGE T&R	Yes	NIPDAU	Level-1-260C-UNLIM	-40 to 85	2843B
TL2843BDR-8.A	Active	Production	SOIC (D) | 8	2500 | LARGE T&R	Yes	NIPDAU	Level-1-260C-UNLIM	-40 to 85	2843B
TL2843BDR.A	Active	Production	SOIC (D) | 14	2500 | LARGE T&R	Yes	NIPDAU	Level-1-260C-UNLIM	-40 to 85	TL2843B
TL2843BDRG4-8	Active	Production	SOIC (D) | 8	2500 | LARGE T&R	Yes	NIPDAU	Level-1-260C-UNLIM	-40 to 85	2843B
TL2843BP	Active	Production	PDIP (P) | 8	50 | TUBE	Yes	NIPDAU	N/A for Pkg Type	-40 to 85	TL2843BP
TL2843BP.A	Active	Production	PDIP (P) | 8	50 | TUBE	Yes	NIPDAU	N/A for Pkg Type	-40 to 85	TL2843BP
TL2844BD-8	Obsolete	Production	SOIC (D) | 8	-	-	Call TI	Call TI	-40 to 85	2844B
TL2844BDR	Active	Production	SOIC (D) | 14	2500 | LARGE T&R	Yes	Call TI | Nipdau | Nipdau	Level-1-260C-UNLIM	-40 to 85	TL2844B
TL2844BDR-8	Active	Production	SOIC (D) | 8	2500 | LARGE T&R	Yes	NIPDAU	Level-1-260C-UNLIM	-40 to 85	2844B
TL2844BDR-8.A	Active	Production	SOIC (D) | 8	2500 | LARGE T&R	Yes	NIPDAU	Level-1-260C-UNLIM	-40 to 85	2844B
TL2844BDR.A	Active	Production	SOIC (D) | 14	2500 | LARGE T&R	Yes	NIPDAU	Level-1-260C-UNLIM	-40 to 85	TL2844B
TL2844BDRG4-8	Active	Production	SOIC (D) | 8	2500 | LARGE T&R	Yes	NIPDAU	Level-1-260C-UNLIM	-40 to 85	2844B
TL2845BD	Obsolete	Production	SOIC (D) | 14	-	-	Call TI	Call TI	-40 to 85	TL2845B
TL2845BD-8	Obsolete	Production	SOIC (D) | 8	-	-	Call TI	Call TI	-40 to 85	2845B
TL2845BDR	Active	Production	SOIC (D) | 14	2500 | LARGE T&R	Yes	NIPDAU	Level-1-260C-UNLIM	-40 to 85	TL2845B
TL2845BDR-8	Active	Production	SOIC (D) | 8	2500 | LARGE T&R	Yes	NIPDAU	Level-1-260C-UNLIM	-40 to 85	2845B
TL2845BDR-8.A	Active	Production	SOIC (D) | 8	2500 | LARGE T&R	Yes	NIPDAU	Level-1-260C-UNLIM	-40 to 85	2845B

Orderable part number	Status (1)	Material type (2)	Package | Pins	Package qty | Carrier	RoHS (3)	Lead finish/ Ball material (4)	MSL rating/ Peak reflow (5)	Op temp (°C)	Part marking (6)
TL2845BDR.A	Active	Production	SOIC (D) | 14	2500 | LARGE T&R	Yes	NIPDAU	Level-1-260C-UNLIM	-40 to 85	TL2845B
TL2845BDRG4-8	Active	Production	SOIC (D) | 8	2500 | LARGE T&R	Yes	NIPDAU	Level-1-260C-UNLIM	-40 to 85	2845B
TL3842BD	Obsolete	Production	SOIC (D) | 14	-	-	Call TI	Call TI	0 to 70	TL3842B
TL3842BD-8	Obsolete	Production	SOIC (D) | 8	-	-	Call TI	Call TI	0 to 70	3842B
TL3842BDR	Active	Production	SOIC (D) | 14	2500 | LARGE T&R	Yes	NIPDAU | NIPDAU	Level-1-260C-UNLIM	0 to 70	TL3842B
TL3842BDR-8	Active	Production	SOIC (D) | 8	2500 | LARGE T&R	Yes	NIPDAU	Level-1-260C-UNLIM	0 to 70	3842B
TL3842BDR-8.A	Active	Production	SOIC (D) | 8	2500 | LARGE T&R	Yes	NIPDAU	Level-1-260C-UNLIM	0 to 70	3842B
TL3842BDR.A	Active	Production	SOIC (D) | 14	2500 | LARGE T&R	Yes	NIPDAU	Level-1-260C-UNLIM	0 to 70	TL3842B
TL3842BP	Obsolete	Production	PDIP (P) | 8	-	-	Call TI	Call TI	0 to 70	TL3842BP
TL3843BD	Obsolete	Production	SOIC (D) | 14	-	-	Call TI	Call TI	0 to 70	TL3843B
TL3843BD-8	Obsolete	Production	SOIC (D) | 8	-	-	Call TI	Call TI	0 to 70	3843B
TL3843BDR	Active	Production	SOIC (D) | 14	2500 | LARGE T&R	Yes	NIPDAU | NIPDAU	Level-1-260C-UNLIM	0 to 70	TL3843B
TL3843BDR-8	Active	Production	SOIC (D) | 8	2500 | LARGE T&R	Yes	NIPDAU	Level-1-260C-UNLIM	0 to 70	3843B
TL3843BDR-8.A	Active	Production	SOIC (D) | 8	2500 | LARGE T&R	Yes	NIPDAU	Level-1-260C-UNLIM	0 to 70	3843B
TL3843BDR.A	Active	Production	SOIC (D) | 14	2500 | LARGE T&R	Yes	NIPDAU	Level-1-260C-UNLIM	0 to 70	TL3843B
TL3843BP	Active	Production	PDIP (P) | 8	50 | TUBE	Yes	NIPDAU	N/A for Pkg Type	0 to 70	TL3843BP
TL3843BP.A	Active	Production	PDIP (P) | 8	50 | TUBE	Yes	NIPDAU	N/A for Pkg Type	0 to 70	TL3843BP
TL3844BD-8	Obsolete	Production	SOIC (D) | 8	-	-	Call TI	Call TI	0 to 70	3844B
TL3844BDR	Active	Production	SOIC (D) | 14	2500 | LARGE T&R	Yes	Call TI | Nipdau | Nipdau	Level-1-260C-UNLIM	0 to 70	TL3844B
TL3844BDR-8	Active	Production	SOIC (D) | 8	2500 | LARGE T&R	Yes	NIPDAU	Level-1-260C-UNLIM	0 to 70	3844B
TL3844BDR-8.A	Active	Production	SOIC (D) | 8	2500 | LARGE T&R	Yes	NIPDAU	Level-1-260C-UNLIM	0 to 70	3844B
TL3844BDR.A	Active	Production	SOIC (D) | 14	2500 | LARGE T&R	Yes	NIPDAU	Level-1-260C-UNLIM	0 to 70	TL3844B
TL3844BP	Active	Production	PDIP (P) | 8	50 | TUBE	Yes	NIPDAU	N/A for Pkg Type	0 to 70	TL3844BP
TL3844BP.A	Active	Production	PDIP (P) | 8	50 | TUBE	Yes	NIPDAU	N/A for Pkg Type	0 to 70	TL3844BP
TL3845BD	Obsolete	Production	SOIC (D) | 14	-	-	Call TI	Call TI	0 to 70	TL3845B
TL3845BD-8	Obsolete	Production	SOIC (D) | 8	-	-	Call TI	Call TI	0 to 70	3845B
TL3845BDR	Obsolete	Production	SOIC (D) | 14	-	-	Call TI	Call TI	0 to 70	TL3845B
TL3845BDR-8	Active	Production	SOIC (D) | 8	2500 | LARGE T&R	Yes	NIPDAU	Level-1-260C-UNLIM	0 to 70	3845B
TL3845BDR-8.A	Active	Production	SOIC (D) | 8	2500 | LARGE T&R	Yes	NIPDAU	Level-1-260C-UNLIM	0 to 70	3845B
TL3845BP	Active	Production	PDIP (P) | 8	50 | TUBE	Yes	NIPDAU	N/A for Pkg Type	0 to 70	TL3845BP

Orderable part number	Status (1)	Material type (2)	Package | Pins	Package qty | Carrier	RoHS (3)	Lead finish/ Ball material (4)	MSL rating/ Peak reflow (5)	Op temp (°C)	Part marking (6)
TL3845BP.A	Active	Production	PDIP (P) | 8	50 | TUBE	Yes	NIPDAU	N/A for Pkg Type	0 to 70	TL3845BP

(1) **Status:** For more details on status, see our product life cycle.

(2) **Material type:** When designated, preproduction parts are prototypes/experimental devices, and are not yet approved or released for full production. Testing and final process, including without limitation quality assurance, reliability performance testing, and/or process qualification, may not yet be complete, and this item is subject to further changes or possible discontinuation. If available for ordering, purchases will be subject to an additional waiver at checkout, and are intended for early internal evaluation purposes only. These items are sold without warranties of any kind.

(3) **RoHS values:** Yes, No, RoHS Exempt. See the TI RoHS Statement for additional information and value definition.

(4) **Lead finish/Ball material:** Parts may have multiple material finish options. Finish options are separated by a vertical ruled line. Lead finish/Ball material values may wrap to two lines if the finish value exceeds the maximum column width.

(5) **MSL rating/Peak reflow:** The moisture sensitivity level ratings and peak solder (reflow) temperatures. In the event that a part has multiple moisture sensitivity ratings, only the lowest level per JEDEC standards is shown. Refer to the shipping label for the actual reflow temperature that will be used to mount the part to the printed circuit board.

(6) **Part marking:** There may be an additional marking, which relates to the logo, the lot trace code information, or the environmental category of the part.

Multiple part markings will be inside parentheses. Only one part marking contained in parentheses and separated by a "~" will appear on a part. If a line is indented then it is a continuation of the previous line and the two combined represent the entire part marking for that device.

Important Information and Disclaimer: The information provided on this page represents TI's knowledge and belief as of the date that it is provided. TI bases its knowledge and belief on information provided by third parties, and makes no representation or warranty as to the accuracy of such information. Efforts are underway to better integrate information from third parties. TI has taken and continues to take reasonable steps to provide representative and accurate information but may not have conducted destructive testing or chemical analysis on incoming materials and chemicals. TI and TI suppliers consider certain information to be proprietary, and thus CAS numbers and other limited information may not be available for release.

In no event shall TI's liability arising out of such information exceed the total purchase price of the TI part(s) at issue in this document sold by TI to Customer on an annual basis.

OTHER QUALIFIED VERSIONS OF TL2843B :

- Automotive : TL2843B-Q1

NOTE: Qualified Version Definitions:

- Automotive - Q100 devices qualified for high-reliability automotive applications targeting zero defects

TAPE AND REEL INFORMATION

REEL DIMENSIONS

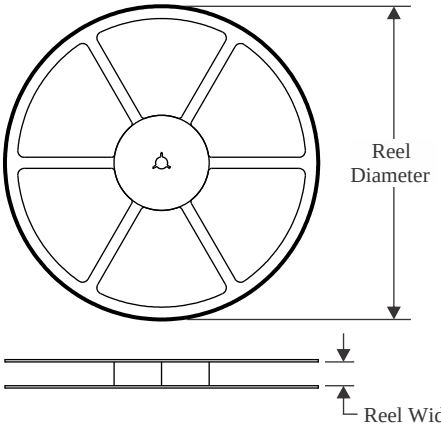

TAPE DIMENSIONS

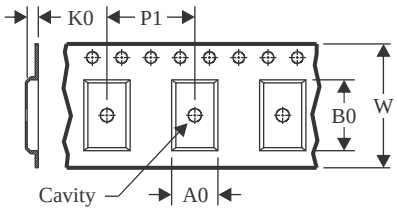

A0	Dimension designed to accommodate the component width
B0	Dimension designed to accommodate the component length
K0	Dimension designed to accommodate the component thickness
W	Overall width of the carrier tape
P1	Pitch between successive cavity centers

QUADRANT ASSIGNMENTS FOR PIN 1 ORIENTATION IN TAPE

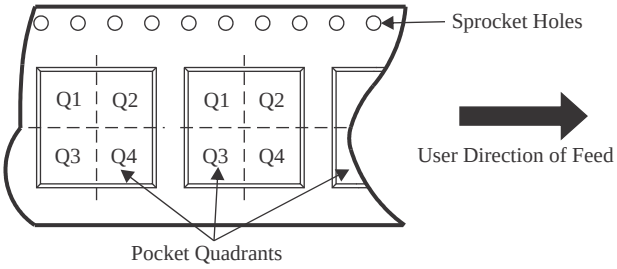

*All dimensions are nominal

Device	Package Type	Package Drawing	Pins	SPQ	Reel Diameter (mm)	Reel Width W1 (mm)	A0 (mm)	B0 (mm)	K0 (mm)	P1 (mm)	W (mm)	Pin1 Quadrant
TL2842BDR	SOIC	D	14	2500	330.0	16.4	6.5	9.0	2.1	8.0	16.0	Q1
TL2842BDR-8	SOIC	D	8	2500	330.0	12.4	6.4	5.2	2.1	8.0	12.0	Q1
TL2843BDR	SOIC	D	14	2500	330.0	16.4	6.5	9.0	2.1	8.0	16.0	Q1
TL2843BDR-8	SOIC	D	8	2500	330.0	12.4	6.4	5.2	2.1	8.0	12.0	Q1
TL2844BDR	SOIC	D	14	2500	330.0	16.4	6.5	9.0	2.1	8.0	16.0	Q1
TL2844BDR-8	SOIC	D	8	2500	330.0	12.4	6.4	5.2	2.1	8.0	12.0	Q1
TL2845BDR	SOIC	D	14	2500	330.0	16.4	6.5	9.0	2.1	8.0	16.0	Q1
TL2845BDR-8	SOIC	D	8	2500	330.0	12.4	6.4	5.2	2.1	8.0	12.0	Q1
TL3842BDR	SOIC	D	14	2500	330.0	16.4	6.5	9.0	2.1	8.0	16.0	Q1
TL3842BDR-8	SOIC	D	8	2500	330.0	12.4	6.4	5.2	2.1	8.0	12.0	Q1
TL3843BDR	SOIC	D	14	2500	330.0	16.4	6.5	9.0	2.1	8.0	16.0	Q1
TL3843BDR-8	SOIC	D	8	2500	330.0	12.4	6.4	5.2	2.1	8.0	12.0	Q1
TL3844BDR	SOIC	D	14	2500	330.0	16.4	6.5	9.0	2.1	8.0	16.0	Q1
TL3844BDR-8	SOIC	D	8	2500	330.0	12.4	6.4	5.2	2.1	8.0	12.0	Q1
TL3845BDR-8	SOIC	D	8	2500	330.0	12.4	6.4	5.2	2.1	8.0	12.0	Q1

TAPE AND REEL BOX DIMENSIONS

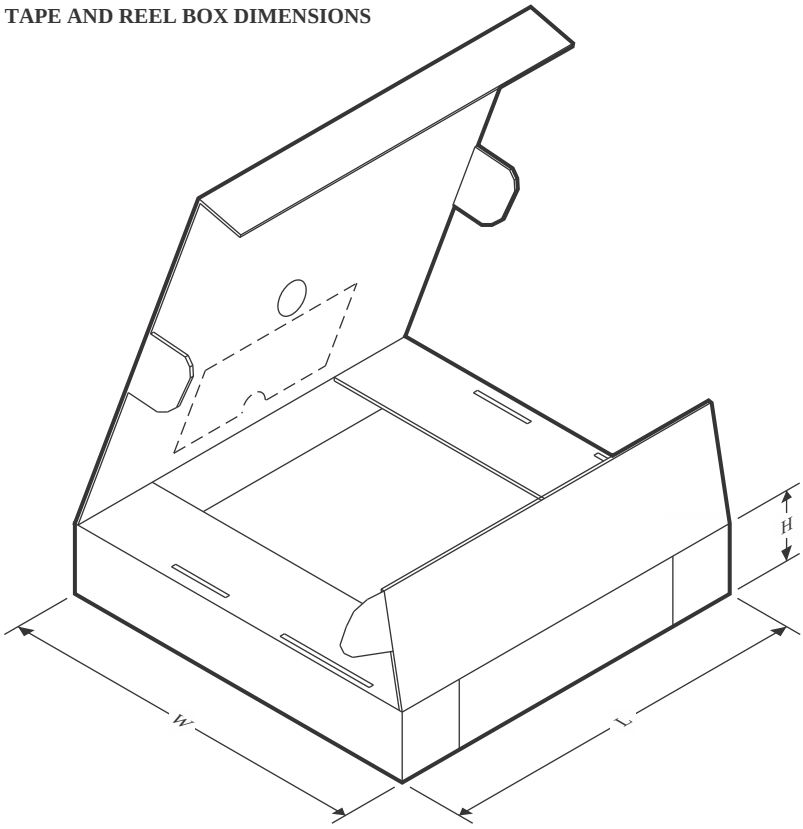

*All dimensions are nominal

Device	Package Type	Package Drawing	Pins	SPQ	Length (mm)	Width (mm)	Height (mm)
TL2842BDR	SOIC	D	14	2500	356.0	356.0	35.0
TL2842BDR-8	SOIC	D	8	2500	353.0	353.0	32.0
TL2843BDR	SOIC	D	14	2500	356.0	356.0	35.0
TL2843BDR-8	SOIC	D	8	2500	353.0	353.0	32.0
TL2844BDR	SOIC	D	14	2500	356.0	356.0	35.0
TL2844BDR-8	SOIC	D	8	2500	353.0	353.0	32.0
TL2845BDR	SOIC	D	14	2500	356.0	356.0	35.0
TL2845BDR-8	SOIC	D	8	2500	353.0	353.0	32.0
TL3842BDR	SOIC	D	14	2500	356.0	356.0	35.0
TL3842BDR-8	SOIC	D	8	2500	353.0	353.0	32.0
TL3843BDR	SOIC	D	14	2500	356.0	356.0	35.0
TL3843BDR-8	SOIC	D	8	2500	353.0	353.0	32.0
TL3844BDR	SOIC	D	14	2500	356.0	356.0	35.0
TL3844BDR-8	SOIC	D	8	2500	353.0	353.0	32.0
TL3845BDR-8	SOIC	D	8	2500	353.0	353.0	32.0

TUBE

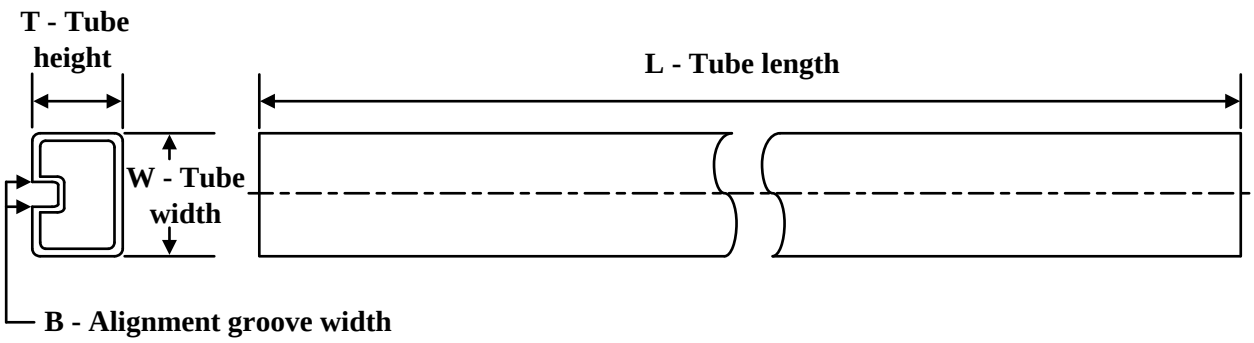

*All dimensions are nominal

Device	Package Name	Package Type	Pins	SPQ	L (mm)	W (mm)	T (µm)	B (mm)
TL2842BP	P	PDIP	8	50	506	13.97	11230	4.32
TL2842BP.A	P	PDIP	8	50	506	13.97	11230	4.32
TL2843BP	P	PDIP	8	50	506	13.97	11230	4.32
TL2843BP.A	P	PDIP	8	50	506	13.97	11230	4.32
TL2844BDR	D	SOIC	14	2500	507	8	3940	4.32
TL2844BDR.A	D	SOIC	14	2500	507	8	3940	4.32
TL3843BP	P	PDIP	8	50	506	13.97	11230	4.32
TL3843BP.A	P	PDIP	8	50	506	13.97	11230	4.32
TL3844BDR	D	SOIC	14	2500	507	8	3940	4.32
TL3844BDR.A	D	SOIC	14	2500	507	8	3940	4.32
TL3844BP	P	PDIP	8	50	506	13.97	11230	4.32
TL3844BP.A	P	PDIP	8	50	506	13.97	11230	4.32
TL3845BP	P	PDIP	8	50	506	13.97	11230	4.32
TL3845BP.A	P	PDIP	8	50	506	13.97	11230	4.32

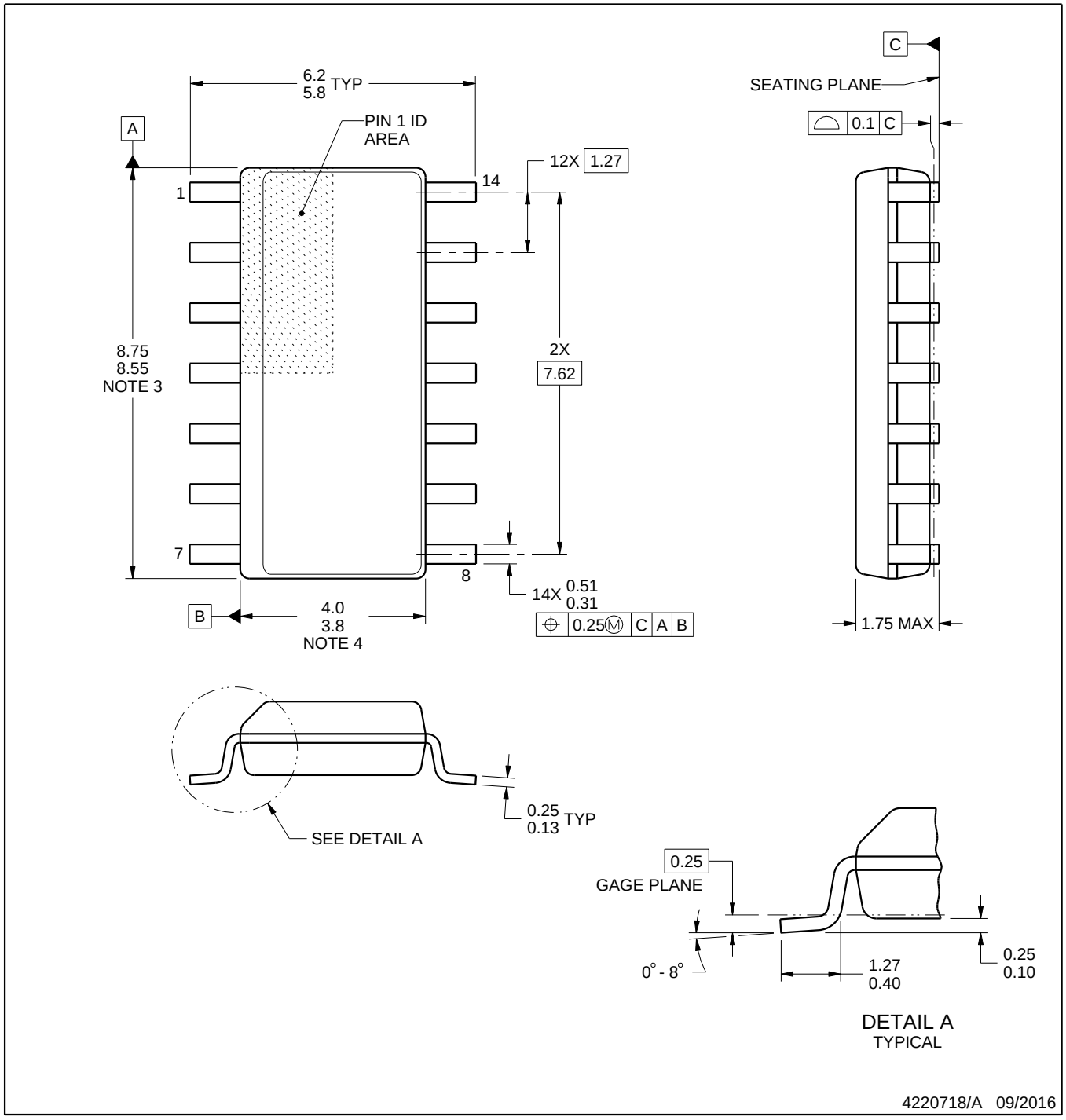

NOTES:

1. All linear dimensions are in millimeters. Dimensions in parenthesis are for reference only. Dimensioning and tolerancing per ASME Y14.5M.
2. This drawing is subject to change without notice.
3. This dimension does not include mold flash, protrusions, or gate burrs. Mold flash, protrusions, or gate burrs shall not exceed 0.15 mm, per side.
4. This dimension does not include interlead flash. Interlead flash shall not exceed 0.43 mm, per side.
5. Reference JEDEC registration MS-012, variation AB.

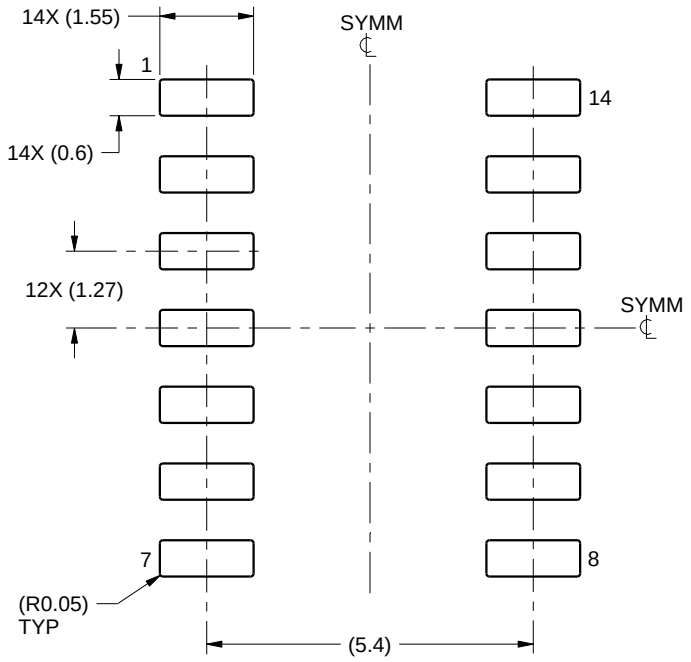

LAND PATTERN EXAMPLE
SCALE:8X

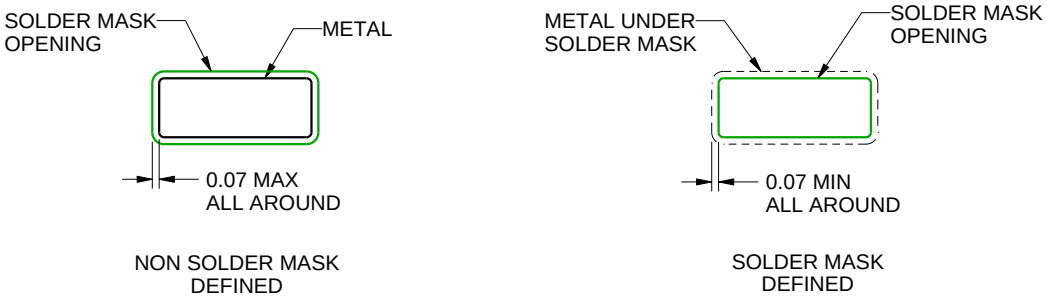

SOLDER MASK DETAILS

4220718/A 09/2016

NOTES: (continued)

6. Publication IPC-7351 may have alternate designs.
7. Solder mask tolerances between and around signal pads can vary based on board fabrication site.

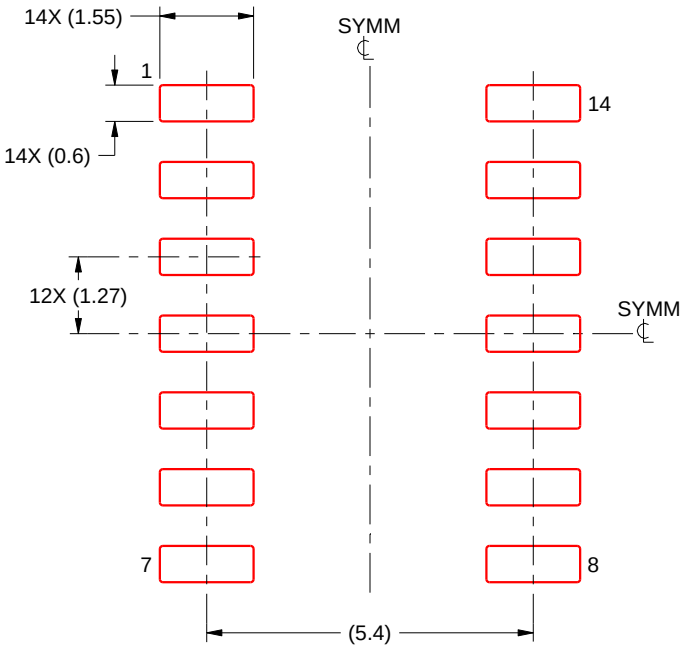

SOLDER PASTE EXAMPLE
BASED ON 0.125 mm THICK STENCIL
SCALE:8X

4220718/A 09/2016

NOTES: (continued)

8. Laser cutting apertures with trapezoidal walls and rounded corners may offer better paste release. IPC-7525 may have alternate design recommendations.
9. Board assembly site may have different recommendations for stencil design.

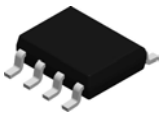

PACKAGE OUTLINE

D0008A

SOIC - 1.75 mm max height

SMALL OUTLINE INTEGRATED CIRCUIT

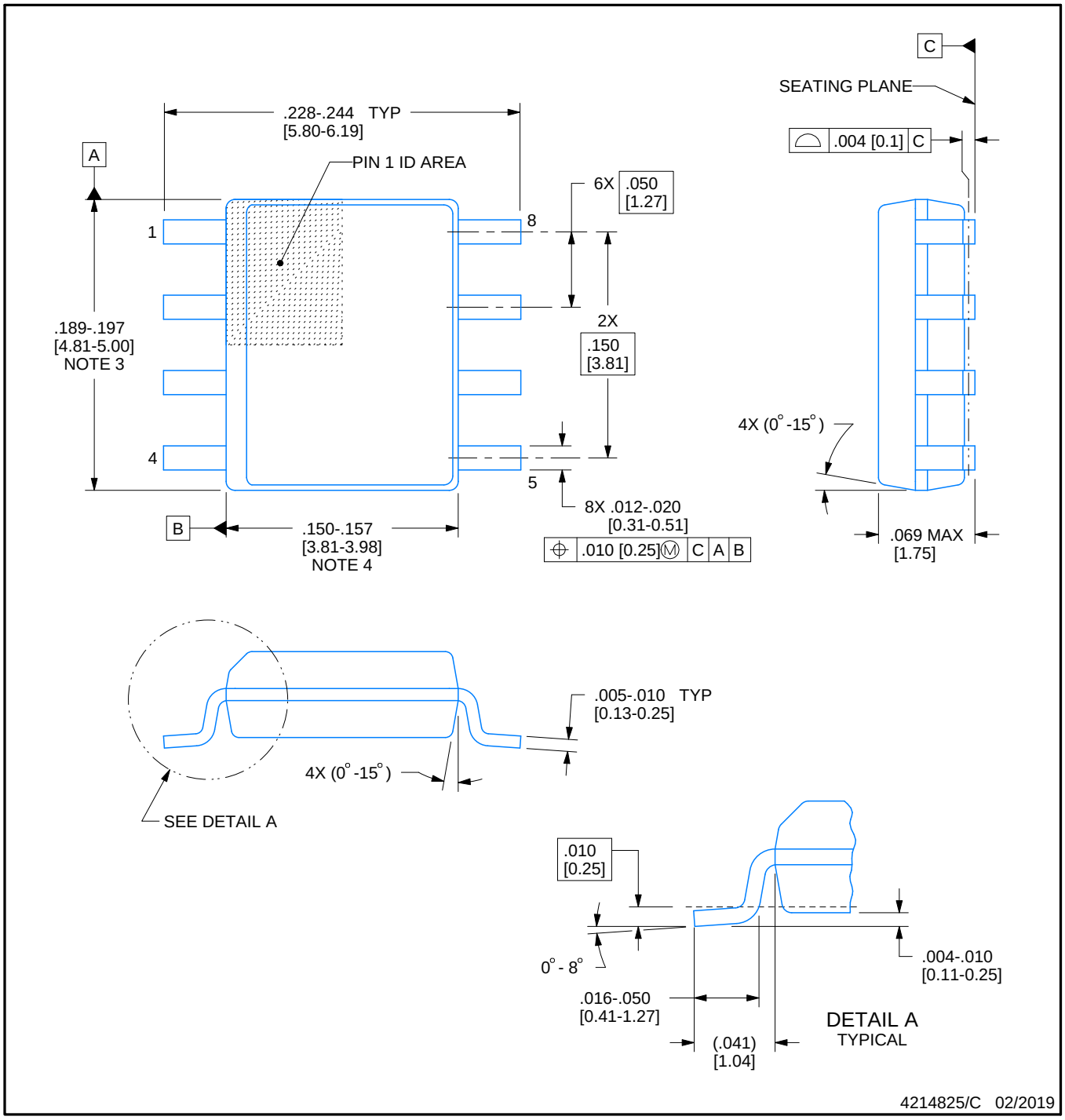

NOTES:

1. Linear dimensions are in inches [millimeters]. Dimensions in parenthesis are for reference only. Controlling dimensions are in inches. Dimensioning and tolerancing per ASME Y14.5M.
2. This drawing is subject to change without notice.
3. This dimension does not include mold flash, protrusions, or gate burrs. Mold flash, protrusions, or gate burrs shall not exceed .006 [0.15] per side.
4. This dimension does not include interlead flash.
5. Reference JEDEC registration MS-012, variation AA.

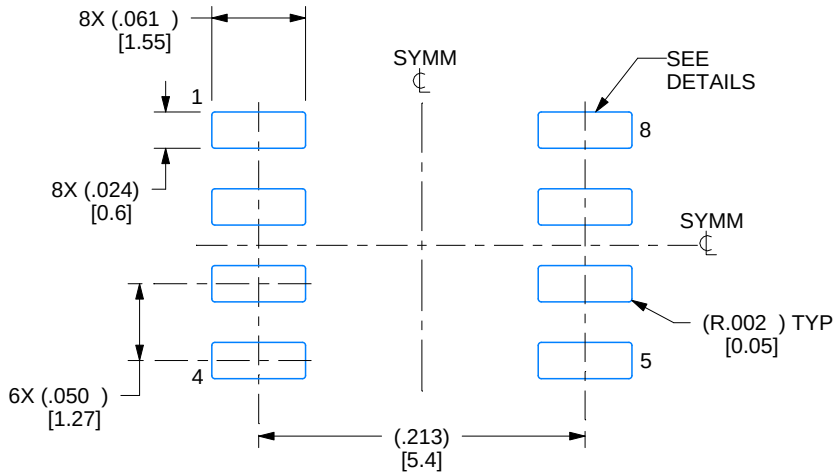

LAND PATTERN EXAMPLE
EXPOSED METAL SHOWN
SCALE:8X

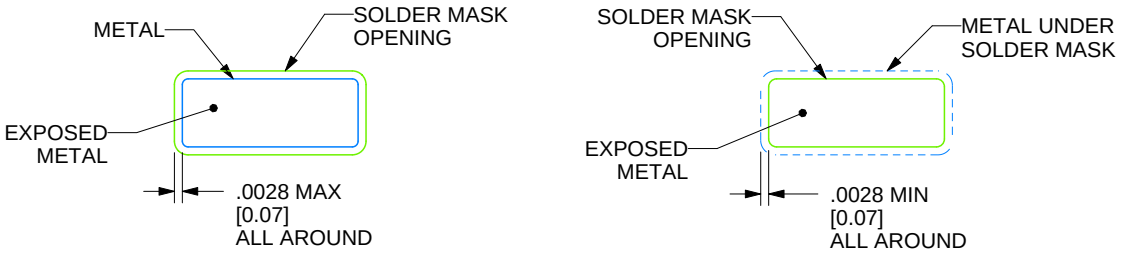

SOLDER MASK DETAILS

4214825/C 02/2019

NOTES: (continued)

6. Publication IPC-7351 may have alternate designs.
7. Solder mask tolerances between and around signal pads can vary based on board fabrication site.

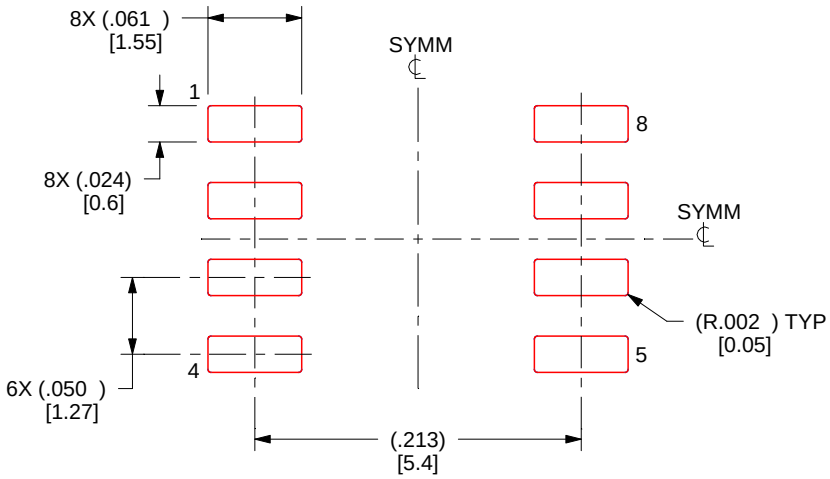

SOLDER PASTE EXAMPLE
BASED ON .005 INCH [0.125 MM] THICK STENCIL
SCALE:8X

4214825/C 02/2019

NOTES: (continued)

8. Laser cutting apertures with trapezoidal walls and rounded corners may offer better paste release. IPC-7525 may have alternate design recommendations.
9. Board assembly site may have different recommendations for stencil design.

P (R–PDIP–T8) PLASTIC DUAL–IN–LINE PACKAGE

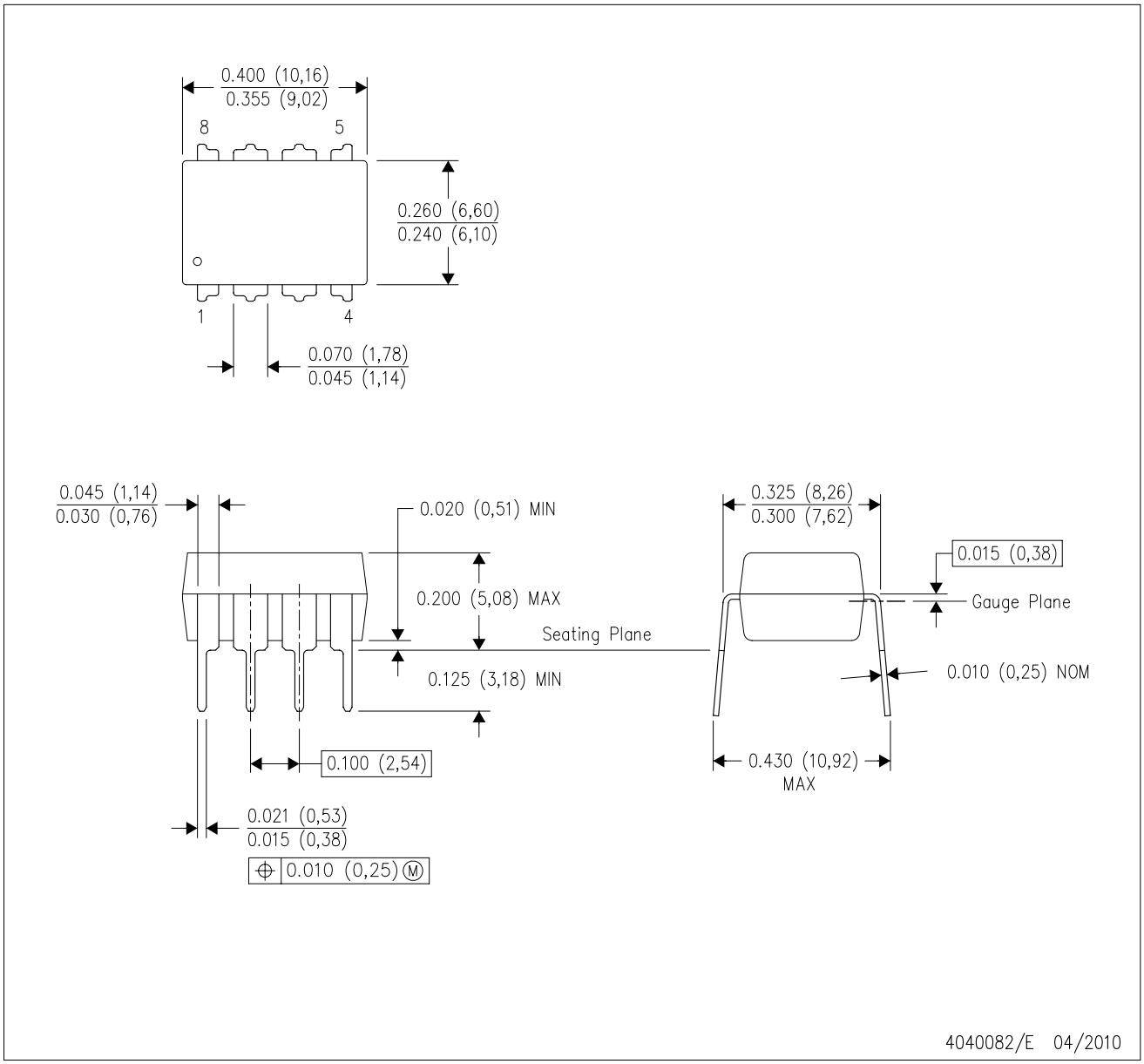

NOTES:
A. All linear dimensions are in inches (millimeters).
B. This drawing is subject to change without notice.
C. Falls within JEDEC MS–001 variation BA.

IMPORTANT NOTICE AND DISCLAIMER

TI PROVIDES TECHNICAL AND RELIABILITY DATA (INCLUDING DATA SHEETS), DESIGN RESOURCES (INCLUDING REFERENCE DESIGNS), APPLICATION OR OTHER DESIGN ADVICE, WEB TOOLS, SAFETY INFORMATION, AND OTHER RESOURCES “AS IS” AND WITH ALL FAULTS, AND DISCLAIMS ALL WARRANTIES, EXPRESS AND IMPLIED, INCLUDING WITHOUT LIMITATION ANY IMPLIED WARRANTIES OF MERCHANTABILITY, FITNESS FOR A PARTICULAR PURPOSE OR NON-INFRINGEMENT OF THIRD PARTY INTELLECTUAL PROPERTY RIGHTS.

These resources are intended for skilled developers designing with TI products. You are solely responsible for (1) selecting the appropriate TI products for your application, (2) designing, validating and testing your application, and (3) ensuring your application meets applicable standards, and any other safety, security, regulatory or other requirements.

These resources are subject to change without notice. TI grants you permission to use these resources only for development of an application that uses the TI products described in the resource. Other reproduction and display of these resources is prohibited. No license is granted to any other TI intellectual property right or to any third party intellectual property right. TI disclaims responsibility for, and you will fully indemnify TI and its representatives against, any claims, damages, costs, losses, and liabilities arising out of your use of these resources.

TI’s products are provided subject to TI’s Terms of Sale or other applicable terms available either on ti.com or provided in conjunction with such TI products. TI’s provision of these resources does not expand or otherwise alter TI’s applicable warranties or warranty disclaimers for TI products.

TI objects to and rejects any additional or different terms you may have proposed.

Mailing Address: Texas Instruments, Post Office Box 655303, Dallas, Texas 75265
Copyright © 2025, Texas Instruments Incorporated