- **Controlled Baseline**
  - **One Assembly/Test Site, One Fabrication Site**
- **Extended Temperature Performance of –40°C to 125°C**
- **Enhanced Diminishing Manufacturing Sources (DMS) Support**
- **Enhanced Product Change Notification**
- **Qualification Pedigree†**
- **Member of the Texas Instruments Widebus™ Family**
- **Inputs Are TTL-Voltage Compatible**
- **3-State Bus Driving True Outputs**
- **Flow-Through Architecture Optimizes PCB Layout**
- **Distributed V_{CC} and GND Pins Minimize High-Speed Switching Noise**

† Component qualification in accordance with JEDEC and industry standards to ensure reliable operation over an extended temperature range. This includes, but is not limited to, highly accelerated stress test (HAST) or biased 85/85, temperature cycle, autoclave or unbiased HAST, electromigration, bond intermetallic life, and mold compound life.

DL PACKAGE
(TOP VIEW)

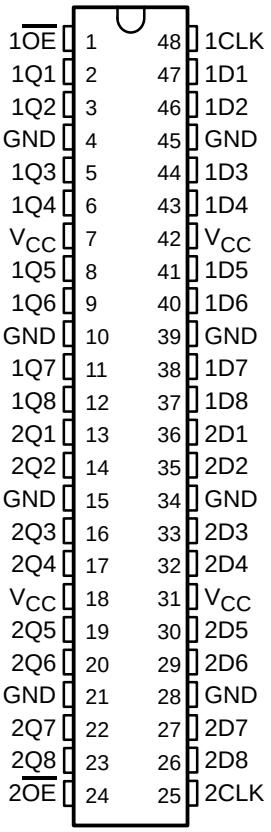

description

The SN74ACT16374Q-EP is a 16-bit edge-triggered D-type flip-flop with 3-state outputs, designed specifically for driving highly capacitive or relatively low-impedance loads. It is particularly suitable for implementing buffer registers, I/O ports, bidirectional bus drivers, and working registers.

This device can be used as two 8-bit flip-flops or one 16-bit flip-flop. On the positive transition of the clock (CLK) input, the Q outputs of the flip-flop take on the logic levels set up at the data (D) inputs.

An output-enable ($\overline{OE}$) input can be used to place the outputs in either a normal logic state (high or low logic levels) or the high-impedance state. In the high-impedance state, the outputs neither load nor drive the bus lines significantly. The high-impedance state provides the capability to drive bus lines in a bus-organized system, without need for interface or pullup components. $\overline{OE}$ does not affect the internal operations of the flip-flop. Old data can be retained or new data can be entered while the outputs are in the high-impedance state.

ORDERING INFORMATION

T_A	PACKAGE‡		ORDERABLE PART NUMBER	TOP-SIDE MARKING
–40°C to 125°C	SSOP – DL	Tape and reel	SN74ACT16374QDLREP	ACT16374QEP

‡ Package drawings, standard packing quantities, thermal data, symbolization, and PCB design guidelines are available at www.ti.com/sc/package.

Please be aware that an important notice concerning availability, standard warranty, and use in critical applications of Texas Instruments semiconductor products and disclaimers thereto appears at the end of this data sheet.

Widebus is a trademark of Texas Instruments.

PRODUCTION DATA information is current as of publication date. Products conform to specifications per the terms of Texas Instruments standard warranty. Production processing does not necessarily include testing of all parameters.

Copyright © 2002, Texas Instruments Incorporated

FUNCTION TABLE
(each section)

INPUTS			OUTPUT
$\overline{OE}$	CLK	D	Q
L	↑	H	H
L	↑	L	L
L	H or L	X	Q_0
H	X	X	Z

logic diagram (positive logic)

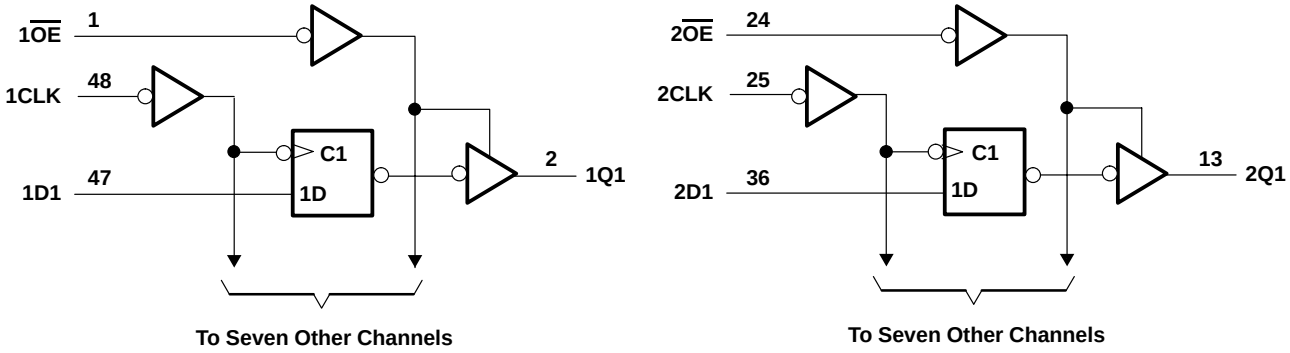

absolute maximum ratings over operating free-air temperature range (unless otherwise noted)†

Supply voltage range, V_{CC} . . . . . –0.5 V to 7 V
Input voltage range, V_I (see Note 1) . . . . . –0.5 V to V_{CC} + 0.5 V
Output voltage range, V_O (see Note 1) . . . . . –0.5 V to V_{CC} + 0.5 V
Input clamp current, I_{IK} (V_I < 0 or V_I > V_{CC}) . . . . . ±20 mA
Output clamp current, I_{OK} (V_O < 0 or V_O > V_{CC}) . . . . . ±24 mA
Continuous output current, I_O (V_O = 0 to V_{CC}) . . . . . ±24 mA
Continuous current through V_{CC} or GND . . . . . ±260 mA
Maximum power dissipation at T_A = 55°C (in still air) (see Note 2): DL package . . . . . 1.2 W
Storage temperature range, T_{stg} . . . . . –65°C to 150°C

† Stresses beyond those listed under “absolute maximum ratings” may cause permanent damage to the device. These are stress ratings only, and functional operation of the device at these or any other conditions beyond those indicated under “recommended operating conditions” is not implied. Exposure to absolute-maximum-rated conditions for extended periods may affect device reliability.

NOTES: 1. The input and output voltage ratings may be exceeded if the input and output current ratings are observed.
2. The maximum package power dissipation is calculated using a junction temperature of 150°C and a board trace length of 750 mils.

recommended operating conditions (see Note 3)

		MIN	NOM	MAX	UNIT
V_{CC}	Supply voltage (see Note 4)	4.5	5	5.5	V
V_{IH}	High-level input voltage	2			V
V_{IL}	Low-level input voltage			0.8	V
V_I	Input voltage	0		V_{CC}	V
V_O	Output voltage	0		V_{CC}	V
I_{OH}	High-level output current			–16	mA
I_{OL}	Low-level output current			16	mA
$\Delta t/\Delta v$	Input transition rise or fall rate	0		10	ns/V
T_A	Operating free-air temperature	–40		125	°C

NOTES: 3. All unused inputs of the device must be at V_{CC} or GND to ensure proper device operation. Refer to the TI application report, *Implications of Slow or Floating CMOS Inputs*, literature number SCBA004.
4. All V_{CC} and GND pins must be connected to the proper-voltage power supply.

electrical characteristics over recommended operating free-air temperature range (unless otherwise noted)

PARAMETER	TEST CONDITIONS		V_{CC}	T_A = 25°C			MIN	MAX	UNIT
				MIN	TYP	MAX			
V_{OH}	I_{OH} = –50 μA		4.5 V	4.4			4.4		V
			5.5 V	5.4			5.4		
	I_{OH} = –16 mA		4.5 V	3.94			3.7		
			5.5 V	4.94			4.7		
	I_{OH} = –24 mA†		5.5 V				3.85		
V_{OL}	I_{OL} = 50 μA		4.5 V			0.1		0.1	V
			5.5 V			0.1		0.1	
	I_{OL} = 16 mA		4.5 V			0.36		0.5	
			5.5 V			0.36		0.5	
	I_{OL} = 24 mA†		5.5 V					0.5	
I_I	$V_I = V_{CC}$ or GND		5.5 V			±0.1		±1	μA
I_{OZ}	$V_O = V_{CC}$ or GND		5.5 V			±0.5		±10	μA
I_{CC}	$V_I = V_{CC}$ or GND,	I_O = 0	5.5 V			8		160	μA
ΔI_{CC}‡	One input at 3.4 V,	Other inputs at GND or V_{CC}	5.5 V			0.9		1	mA
C_i	$V_I = V_{CC}$ or GND		5 V		4.5				pF
C_o	$V_O = V_{CC}$ or GND		5 V		12				pF

† Not more than one output should be tested at a time, and the duration of the test should not exceed 10 ms.
‡ This is the increase in supply current for each input that is at one of the specified TTL-voltage levels rather than 0 V to V_{CC}.

timing requirements over recommended ranges of supply voltage and operating free-air temperature (unless otherwise noted) (see Figure 1)

			T_A = 25°C		MIN	MAX	UNIT
			MIN	MAX			
f_{clock}	Clock frequency		0	65	0	65	MHz
t_w	Pulse duration	CLK low	7.5		7.5		ns
		CLK high	4.5		4.5		
t_{su}	Setup time, data before CLK↑		6.5		6.5		ns
t_h	Hold time, data after CLK↑		1		1		ns

switching characteristics over recommended ranges of supply voltage and operating free-air temperature (unless otherwise noted) (see Figure 1)

PARAMETER	FROM (INPUT)	TO (OUTPUT)	T_A = 25°C			MIN	MAX	UNIT
			MIN	TYP	MAX			
f_{max}			65			65		MHz
t_{PLH}	CLK	Q	5.1	8.8	10.9	5.1	13.2	ns
t_{PHL}			5.3	8.8	10.9	5.3	13.1	
t_{PZH}	$\overline{OE}$	Q	3.7	8.4	10.5	3.7	12.7	ns
t_{PZL}			4.4	9.7	11.9	4.4	14.3	
t_{PHZ}	$\overline{OE}$	Q	5.4	7.9	9.8	5.4	10.9	ns
t_{PLZ}			4.9	7.2	9.1	4.9	10.2	

operating characteristics, V_{CC} = 5 V, T_A = 25°C

PARAMETER			TEST CONDITIONS		TYP	UNIT
C_{pd}	Power dissipation capacitance per flip-flop	Outputs enabled	C_L = 50 pF,	f = 1 MHz	52	pF
		Outputs disabled			38	

PARAMETER MEASUREMENT INFORMATION

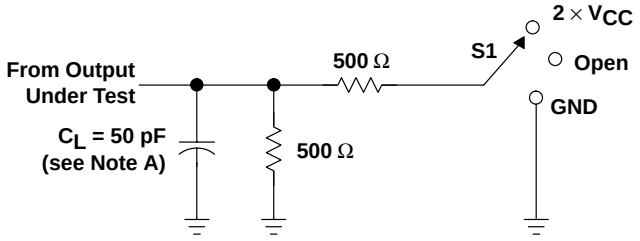

LOAD CIRCUIT

TEST	S1
t_{PLH}/t_{PHL}	Open
t_{PLZ}/t_{PZL}	2 × V_{CC}
t_{PHZ}/t_{PZH}	GND

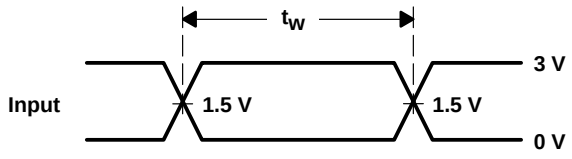

VOLTAGE WAVEFORMS

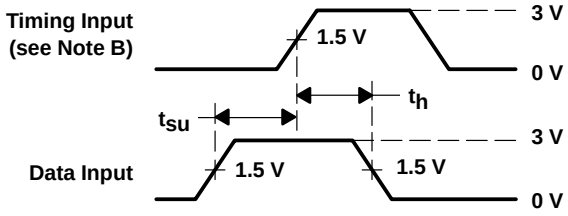

VOLTAGE WAVEFORMS

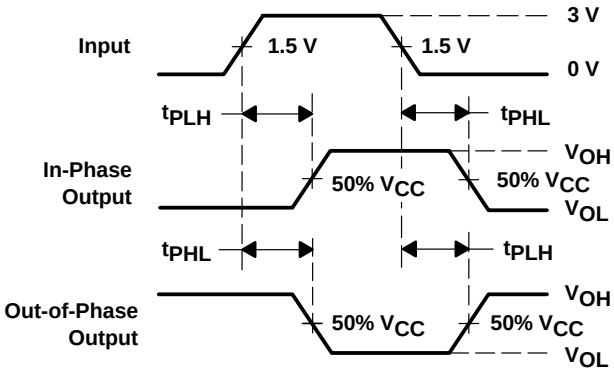

VOLTAGE WAVEFORMS

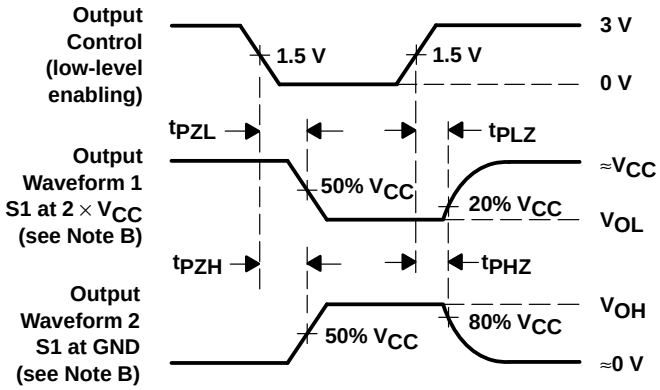

VOLTAGE WAVEFORMS

NOTES: A. C_L includes probe and jig capacitance.
B. Waveform 1 is for an output with internal conditions such that the output is low except when disabled by the output control. Waveform 2 is for an output with internal conditions such that the output is high except when disabled by the output control.
C. All input pulses are supplied by generators having the following characteristics: PRR ≤ 1 MHz, Z_O = 50 Ω, t_r = 3 ns, t_f = 3 ns.
D. The outputs are measured one at a time with one input transition per measurement.

Figure 1. Load Circuit and Voltage Waveforms

PACKAGING INFORMATION

Orderable part number	Status (1)	Material type (2)	Package | Pins	Package qty | Carrier	RoHS (3)	Lead finish/ Ball material (4)	MSL rating/ Peak reflow (5)	Op temp (°C)	Part marking (6)
SN74ACT16374QDLREP	Active	Production	SSOP (DL) | 48	1000 | LARGE T&R	Yes	NIPDAU	Level-1-260C-UNLIM	-40 to 125	ACT16374QEP
SN74ACT16374QDLREP.A	Active	Production	SSOP (DL) | 48	1000 | LARGE T&R	Yes	NIPDAU	Level-1-260C-UNLIM	-40 to 125	ACT16374QEP
V62/03603-01XE	Active	Production	SSOP (DL) | 48	1000 | LARGE T&R	Yes	NIPDAU	Level-1-260C-UNLIM	-40 to 125	ACT16374QEP

(1) **Status:** For more details on status, see our product life cycle.

(2) **Material type:** When designated, preproduction parts are prototypes/experimental devices, and are not yet approved or released for full production. Testing and final process, including without limitation quality assurance, reliability performance testing, and/or process qualification, may not yet be complete, and this item is subject to further changes or possible discontinuation. If available for ordering, purchases will be subject to an additional waiver at checkout, and are intended for early internal evaluation purposes only. These items are sold without warranties of any kind.

(3) **RoHS values:** Yes, No, RoHS Exempt. See the TI RoHS Statement for additional information and value definition.

(4) **Lead finish/Ball material:** Parts may have multiple material finish options. Finish options are separated by a vertical ruled line. Lead finish/Ball material values may wrap to two lines if the finish value exceeds the maximum column width.

(5) **MSL rating/Peak reflow:** The moisture sensitivity level ratings and peak solder (reflow) temperatures. In the event that a part has multiple moisture sensitivity ratings, only the lowest level per JEDEC standards is shown. Refer to the shipping label for the actual reflow temperature that will be used to mount the part to the printed circuit board.

(6) **Part marking:** There may be an additional marking, which relates to the logo, the lot trace code information, or the environmental category of the part.

Multiple part markings will be inside parentheses. Only one part marking contained in parentheses and separated by a "~" will appear on a part. If a line is indented then it is a continuation of the previous line and the two combined represent the entire part marking for that device.

Important Information and Disclaimer: The information provided on this page represents TI's knowledge and belief as of the date that it is provided. TI bases its knowledge and belief on information provided by third parties, and makes no representation or warranty as to the accuracy of such information. Efforts are underway to better integrate information from third parties. TI has taken and continues to take reasonable steps to provide representative and accurate information but may not have conducted destructive testing or chemical analysis on incoming materials and chemicals. TI and TI suppliers consider certain information to be proprietary, and thus CAS numbers and other limited information may not be available for release.

In no event shall TI's liability arising out of such information exceed the total purchase price of the TI part(s) at issue in this document sold by TI to Customer on an annual basis.

TAPE AND REEL INFORMATION

REEL DIMENSIONS

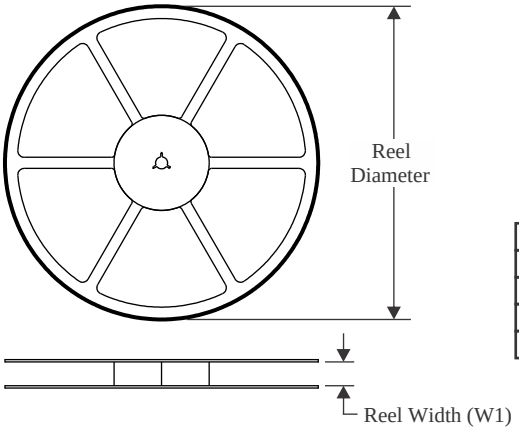

TAPE DIMENSIONS

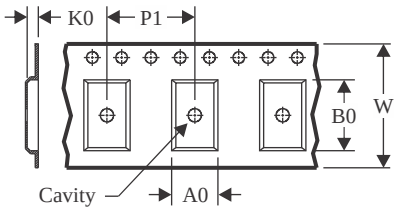

A0	Dimension designed to accommodate the component width
B0	Dimension designed to accommodate the component length
K0	Dimension designed to accommodate the component thickness
W	Overall width of the carrier tape
P1	Pitch between successive cavity centers

QUADRANT ASSIGNMENTS FOR PIN 1 ORIENTATION IN TAPE

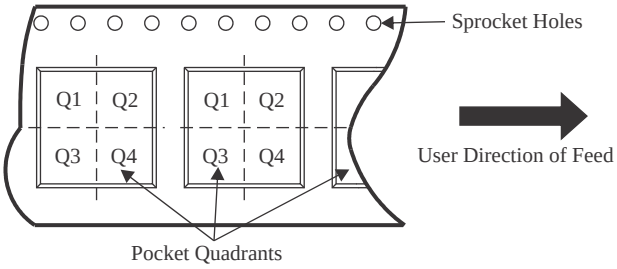

*All dimensions are nominal

Device	Package Type	Package Drawing	Pins	SPQ	Reel Diameter (mm)	Reel Width W1 (mm)	A0 (mm)	B0 (mm)	K0 (mm)	P1 (mm)	W (mm)	Pin1 Quadrant
SN74ACT16374QDLREP	SSOP	DL	48	1000	330.0	32.4	11.35	16.2	3.1	16.0	32.0	Q1

TAPE AND REEL BOX DIMENSIONS

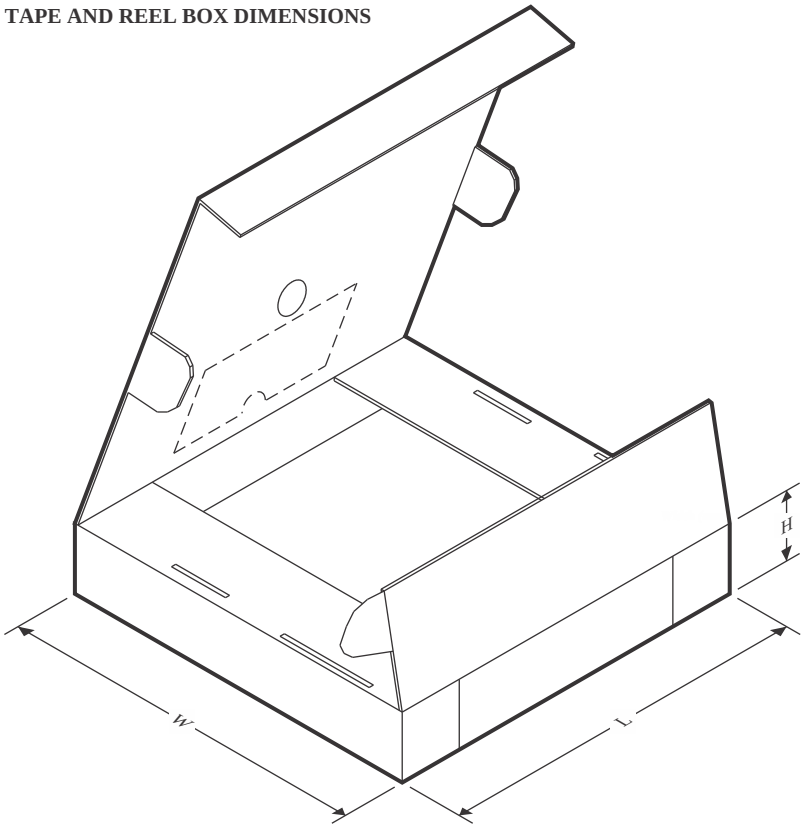

*All dimensions are nominal

Device	Package Type	Package Drawing	Pins	SPQ	Length (mm)	Width (mm)	Height (mm)
SN74ACT16374QDLREP	SSOP	DL	48	1000	367.0	367.0	55.0

DL (R–PDSO–G48) PLASTIC SMALL–OUTLINE PACKAGE

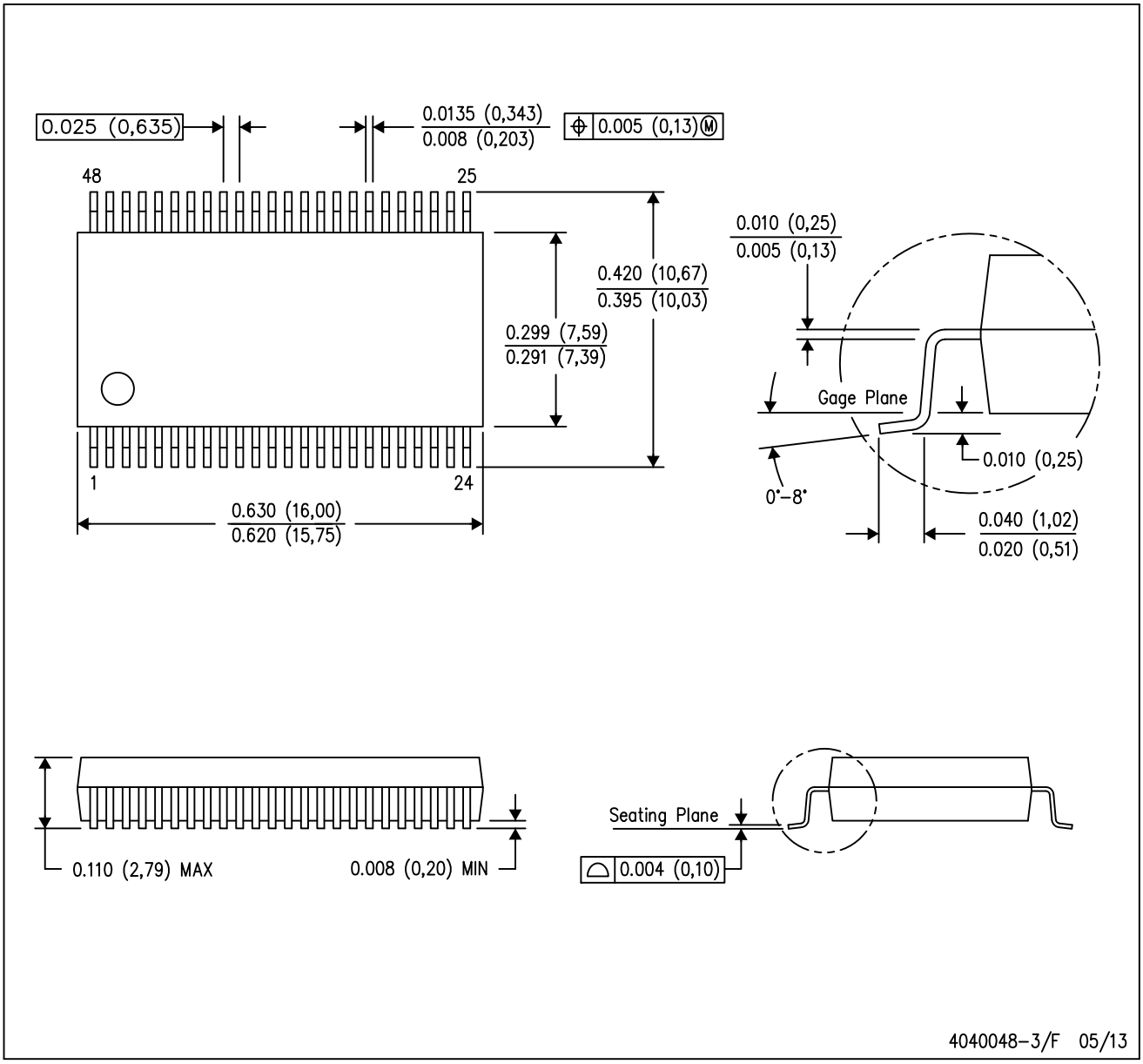

NOTES:
A. All linear dimensions are in inches (millimeters).
B. This drawing is subject to change without notice.
C. Body dimensions do not include mold flash or protrusion not to exceed 0.006 (0,15).
D. Falls within JEDEC MO–118

PowerPAD is a trademark of Texas Instruments.

IMPORTANT NOTICE AND DISCLAIMER

TI PROVIDES TECHNICAL AND RELIABILITY DATA (INCLUDING DATA SHEETS), DESIGN RESOURCES (INCLUDING REFERENCE DESIGNS), APPLICATION OR OTHER DESIGN ADVICE, WEB TOOLS, SAFETY INFORMATION, AND OTHER RESOURCES “AS IS” AND WITH ALL FAULTS, AND DISCLAIMS ALL WARRANTIES, EXPRESS AND IMPLIED, INCLUDING WITHOUT LIMITATION ANY IMPLIED WARRANTIES OF MERCHANTABILITY, FITNESS FOR A PARTICULAR PURPOSE OR NON-INFRINGEMENT OF THIRD PARTY INTELLECTUAL PROPERTY RIGHTS.

These resources are intended for skilled developers designing with TI products. You are solely responsible for (1) selecting the appropriate TI products for your application, (2) designing, validating and testing your application, and (3) ensuring your application meets applicable standards, and any other safety, security, regulatory or other requirements.

These resources are subject to change without notice. TI grants you permission to use these resources only for development of an application that uses the TI products described in the resource. Other reproduction and display of these resources is prohibited. No license is granted to any other TI intellectual property right or to any third party intellectual property right. TI disclaims responsibility for, and you will fully indemnify TI and its representatives against, any claims, damages, costs, losses, and liabilities arising out of your use of these resources.

TI’s products are provided subject to TI’s Terms of Sale or other applicable terms available either on ti.com or provided in conjunction with such TI products. TI’s provision of these resources does not expand or otherwise alter TI’s applicable warranties or warranty disclaimers for TI products.

TI objects to and rejects any additional or different terms you may have proposed.

Mailing Address: Texas Instruments, Post Office Box 655303, Dallas, Texas 75265
Copyright © 2025, Texas Instruments Incorporated