MIXED SIGNAL MICROCONTROLLER

FEATURES

- **Low Supply-Voltage Range: 1.8 V to 3.6 V**
- **Ultra-Low Power Consumption**
  - **Active Mode: 230 µA at 1 MHz, 2.2 V**
  - **Standby Mode: 0.5 µA**
  - **Off Mode (RAM Retention): 0.1 µA**
- **Five Power-Saving Modes**
- **Ultra-Fast Wake-Up From Standby Mode in Less Than 1 µs**
- **16-Bit RISC Architecture, 62.5-ns Instruction Cycle Time**
- **Basic Clock Module Configurations**
  - **Internal Frequencies up to 16 MHz With Four Calibrated Frequency**
  - **Internal Very-Low-Power Low-Frequency (LF) Oscillator**
  - **32-kHz Crystal**
  - **External Digital Clock Source**
- **Two 16-Bit Timer_A With Three Capture/Compare Registers**
- **Up to 24 Capacitive-Touch Enabled I/O Pins**
- **Universal Serial Communication Interface (USCI)**
  - **Enhanced UART Supporting Auto Baudrate Detection (LIN)**
  - **IrDA Encoder and Decoder**
  - **Synchronous SPI**
  - **I^2C™**
- **On-Chip Comparator for Analog Signal Compare Function or Slope Analog-to-Digital (A/D) Conversion**
- **10-Bit 200-ksps Analog-to-Digital (A/D) Converter With Internal Reference, Sample-and-Hold, and Autoscan (See Table 1)**
- **Brownout Detector**
- **Serial Onboard Programming, No External Programming Voltage Needed, Programmable Code Protection by Security Fuse**
- **On-Chip Emulation Logic With Spy-Bi-Wire Interface**
- **Family Members are Summarized in Table 1**
- **Package Options**
  - **TSSOP: 20 Pin, 28 Pin**
  - **PDIP: 20 Pin**
  - **QFN: 32 Pin**
- **For Complete Module Descriptions, See the *MSP430x2xx Family User's Guide* (SLAU144)**

DESCRIPTION

The Texas Instruments MSP430 family of ultra-low-power microcontrollers consists of several devices featuring different sets of peripherals targeted for various applications. The architecture, combined with five low-power modes, is optimized to achieve extended battery life in portable measurement applications. The device features a powerful 16-bit RISC CPU, 16-bit registers, and constant generators that contribute to maximum code efficiency. The digitally controlled oscillator (DCO) allows wake-up from low-power modes to active mode in less than 1 µs.

The MSP430G2x13 and MSP430G2x53 series are ultra-low-power mixed signal microcontrollers with built-in 16-bit timers, up to 24 I/O capacitive-touch enabled pins, a versatile analog comparator, and built-in communication capability using the universal serial communication interface. In addition the MSP430G2x53 family members have a 10-bit analog-to-digital (A/D) converter. For configuration details see Table 1.

Typical applications include low-cost sensor systems that capture analog signals, convert them to digital values, and then process the data for display or for transmission to a host system.

Please be aware that an important notice concerning availability, standard warranty, and use in critical applications of Texas Instruments semiconductor products and disclaimers thereto appears at the end of this data sheet.

PRODUCTION DATA information is current as of publication date. Products conform to specifications per the terms of the Texas Instruments standard warranty. Production processing does not necessarily include testing of all parameters.

Copyright © 2011–2013, Texas Instruments Incorporated

Table 1. Available Options[(1)(2)]

Device	BSL	EEM	Flash (KB)	RAM (B)	Timer_A	COMP_A+ Channel	ADC10 Channel	USCI_A0, USCI_B0	Clock	I/O	Package Type
MSP430G2553IRHB32	1	1	16	512	2x TA3	8	8	1	LF, DCO, VLO	24	32-QFN
MSP430G2553IPW28										24	28-TSSOP
MSP430G2553IPW20										16	20-TSSOP
MSP430G2553IN20										16	20-PDIP
MSP430G2453IRHB32	1	1	8	512	2x TA3	8	8	1	LF, DCO, VLO	24	32-QFN
MSP430G2453IPW28										24	28-TSSOP
MSP430G2453IPW20										16	20-TSSOP
MSP430G2453IN20										16	20-PDIP
MSP430G2353IRHB32	1	1	4	256	2x TA3	8	8	1	LF, DCO, VLO	24	32-QFN
MSP430G2353IPW28										24	28-TSSOP
MSP430G2353IPW20										16	20-TSSOP
MSP430G2353IN20										16	20-PDIP
MSP430G2253IRHB32	1	1	2	256	2x TA3	8	8	1	LF, DCO, VLO	24	32-QFN
MSP430G2253IPW28										24	28-TSSOP
MSP430G2253IPW20										16	20-TSSOP
MSP430G2253IN20										16	20-PDIP
MSP430G2153IRHB32	1	1	1	256	2x TA3	8	8	1	LF, DCO, VLO	24	32-QFN
MSP430G2153IPW28										24	28-TSSOP
MSP430G2153IPW20										16	20-TSSOP
MSP430G2153IN20										16	20-PDIP
MSP430G2513IRHB32	1	1	16	512	2x TA3	8	-	1	LF, DCO, VLO	24	32-QFN
MSP430G2513IPW28										24	28-TSSOP
MSP430G2513IPW20										16	20-TSSOP
MSP430G2513IN20										16	20-PDIP
MSP430G2413IRHB32	1	1	8	512	2x TA3	8	-	1	LF, DCO, VLO	24	32-QFN
MSP430G2413IPW28										24	28-TSSOP
MSP430G2413IPW20										16	20-TSSOP
MSP430G2413IN20										16	20-PDIP
MSP430G2313IRHB32	1	1	4	256	2x TA3	8	-	1	LF, DCO, VLO	24	32-QFN
MSP430G2313IPW28										24	28-TSSOP
MSP430G2313IPW20										16	20-TSSOP
MSP430G2313IN20										16	20-PDIP
MSP430G2213IRHB32	1	1	2	256	2x TA3	8	-	1	LF, DCO, VLO	24	32-QFN
MSP430G2213IPW28										24	28-TSSOP
MSP430G2213IPW20										16	20-TSSOP
MSP430G2213IN20										16	20-PDIP

(1) For the most current package and ordering information, see the Package Option Addendum at the end of this document, or see the TI web site at www.ti.com.
(2) Package drawings, thermal data, and symbolization are available at www.ti.com/packaging.

Copyright © 2011–2013, Texas Instruments Incorporated

Device Pinout, MSP430G2x13 and MSP430G2x53, 20-Pin Devices, TSSOP and PDIP

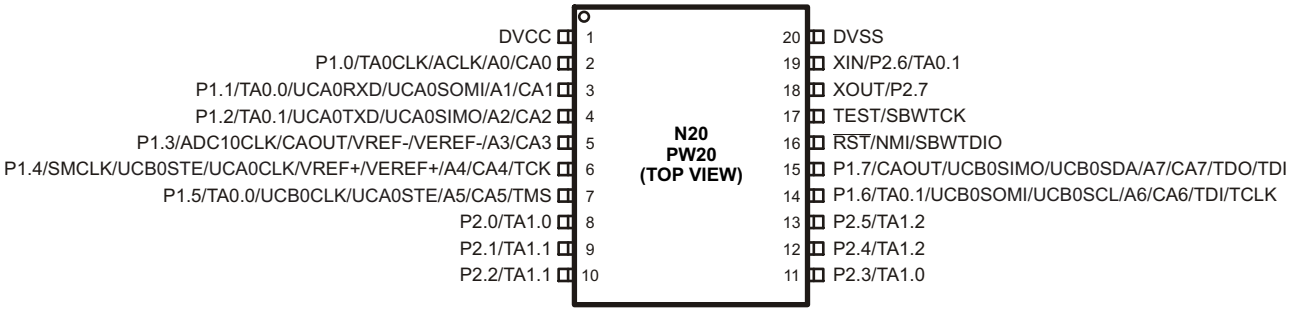

NOTE: ADC10 is available on MSP430G2x53 devices only.

NOTE: The pulldown resistors of port P3 should be enabled by setting P3REN.x = 1.

Device Pinout, MSP430G2x13 and MSP430G2x53, 28-Pin Devices, TSSOP

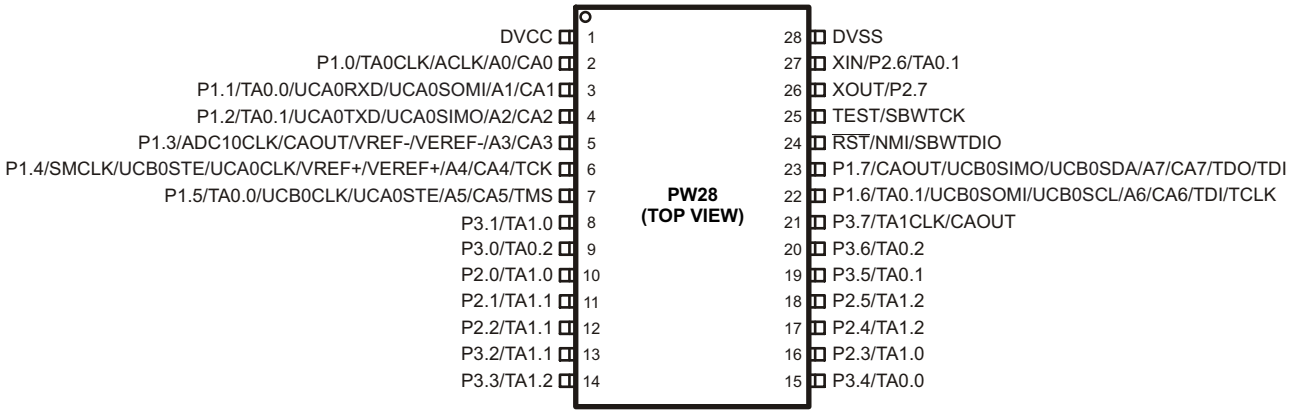

NOTE: ADC10 is available on MSP430G2x53 devices only.

Copyright © 2011–2013, Texas Instruments Incorporated

Device Pinout, MSP430G2x13 and MSP430G2x53, 32-Pin Devices, QFN

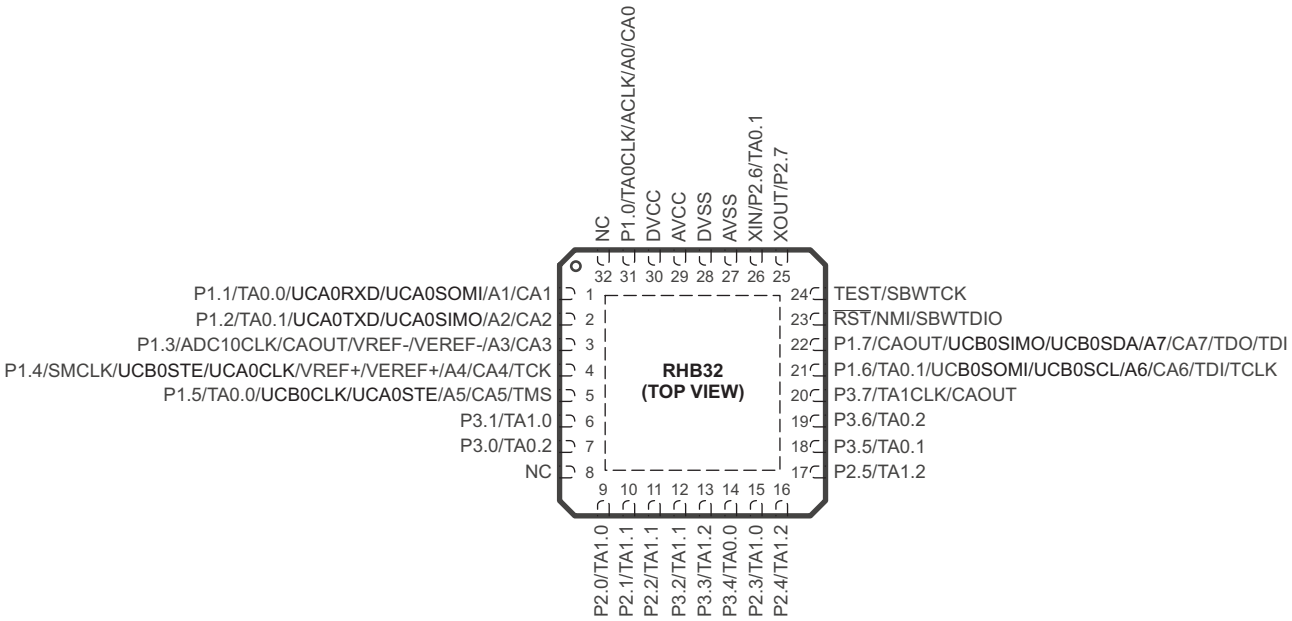

NOTE: ADC10 is available on MSP430G2x53 devices only.

Copyright © 2011–2013, Texas Instruments Incorporated

Functional Block Diagram, MSP430G2x53

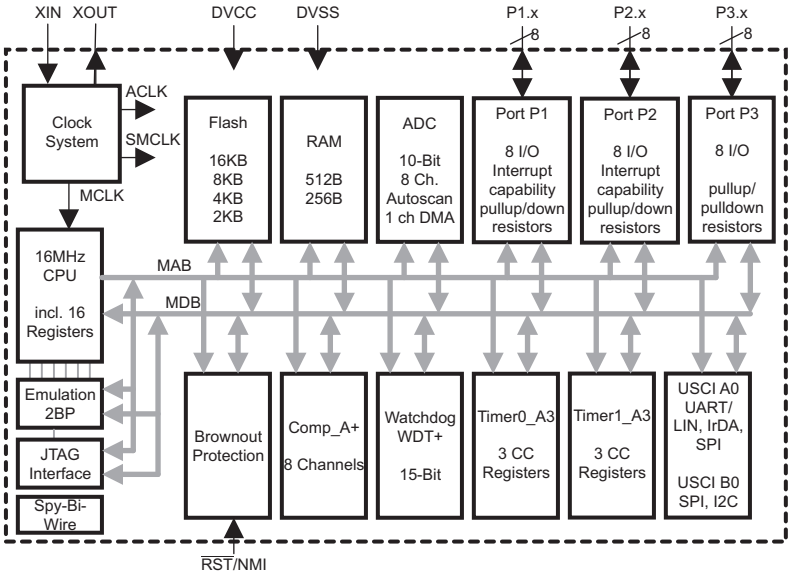

NOTE: Port P3 is available on 28-pin and 32-pin devices only.

Functional Block Diagram, MSP430G2x13

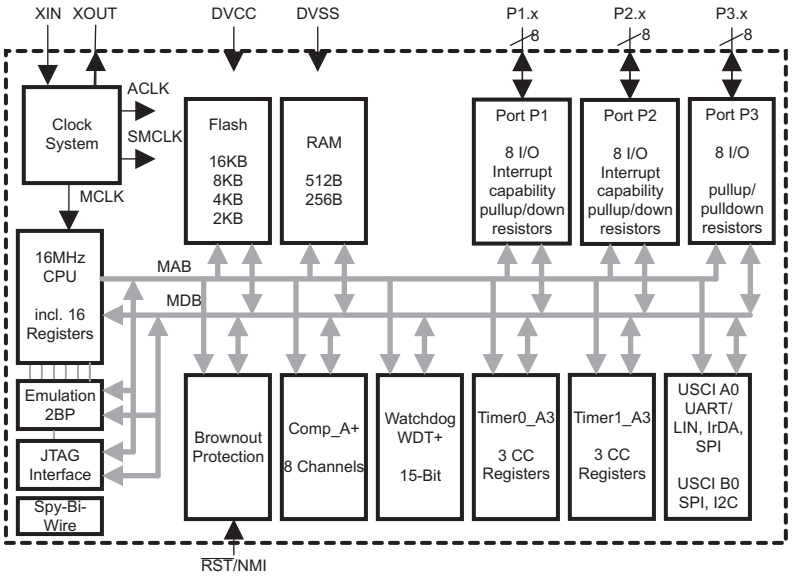

NOTE: Port P3 is available on 28-pin and 32-pin devices only.

Table 2. Terminal Functions

TERMINAL				I/O	DESCRIPTION
NAME	NO.				
	PW20, N20	PW28	RHB32		
P1.0/ TA0CLK/ ACLK/ A0 CA0	2	2	31	I/O	General-purpose digital I/O pin Timer0_A, clock signal TACLK input ACLK signal output ADC10 analog input A0 (1) Comparator_A+, CA0 input
P1.1/ TA0.0/ UCA0RXD/ UCA0SOMI/ A1/ CA1	3	3	1	I/O	General-purpose digital I/O pin Timer0_A, capture: CCI0A input, compare: Out0 output / BSL transmit USCI_A0 UART mode: receive data input USCI_A0 SPI mode: slave data out/master in ADC10 analog input A1 (1) Comparator_A+, CA1 input
P1.2/ TA0.1/ UCA0TXD/ UCA0SIMO/ A2/ CA2	4	4	2	I/O	General-purpose digital I/O pin Timer0_A, capture: CCI1A input, compare: Out1 output USCI_A0 UART mode: transmit data output USCI_A0 SPI mode: slave data in/master out ADC10 analog input A2 (1) Comparator_A+, CA2 input
P1.3/ ADC10CLK/ A3/ VREF-/VEREF-/ CA3/ CAOUT	5	5	3	I/O	General-purpose digital I/O pin ADC10, conversion clock output (1) ADC10 analog input A3 (1) ADC10 negative reference voltage (1) Comparator_A+, CA3 input Comparator_A+, output
P1.4/ SMCLK/ UCB0STE/ UCA0CLK/ A4/ VREF+/VEREF+/ CA4/ TCK	6	6	4	I/O	General-purpose digital I/O pin SMCLK signal output USCI_B0 slave transmit enable USCI_A0 clock input/output ADC10 analog input A4 (1) ADC10 positive reference voltage (1) Comparator_A+, CA4 input JTAG test clock, input terminal for device programming and test
P1.5/ TA0.0/ UCB0CLK/ UCA0STE/ A5/ CA5/ TMS	7	7	5	I/O	General-purpose digital I/O pin Timer0_A, compare: Out0 output / BSL receive USCI_B0 clock input/output USCI_A0 slave transmit enable ADC10 analog input A5 (1) Comparator_A+, CA5 input JTAG test mode select, input terminal for device programming and test

(1) MSP430G2x53 devices only

Copyright © 2011–2013, Texas Instruments Incorporated

Table 2. Terminal Functions (continued)

TERMINAL				I/O	DESCRIPTION
NAME	NO.				
	PW20, N20	PW28	RHB32		
P1.6/ TA0.1/ A6/ CA6/ UCB0SOMI/ UCB0SCL/ TDI/TCLK	14	22	21	I/O	General-purpose digital I/O pin Timer0_A, compare: Out1 output ADC10 analog input A6 (1) Comparator_A+, CA6 input USCI_B0 SPI mode: slave out master in USCI_B0 I2C mode: SCL I2C clock JTAG test data input or test clock input during programming and test
P1.7/ A7/ CA7/ CAOUT/ UCB0SIMO/ UCB0SDA/ TDO/TDI	15	23	22	I/O	General-purpose digital I/O pin ADC10 analog input A7 (1) Comparator_A+, CA7 input Comparator_A+, output USCI_B0 SPI mode: slave in master out USCI_B0 I2C mode: SDA I2C data JTAG test data output terminal or test data input during programming and test (2)
P2.0/ TA1.0	8	10	9	I/O	General-purpose digital I/O pin Timer1_A, capture: CCI0A input, compare: Out0 output
P2.1/ TA1.1	9	11	10	I/O	General-purpose digital I/O pin Timer1_A, capture: CCI1A input, compare: Out1 output
P2.2/ TA1.1	10	12	11	I/O	General-purpose digital I/O pin Timer1_A, capture: CCI1B input, compare: Out1 output
P2.3/ TA1.0	11	16	15	I/O	General-purpose digital I/O pin Timer1_A, capture: CCI0B input, compare: Out0 output
P2.4/ TA1.2	12	17	16	I/O	General-purpose digital I/O pin Timer1_A, capture: CCI2A input, compare: Out2 output
P2.5/ TA1.2	13	18	17	I/O	General-purpose digital I/O pin Timer1_A, capture: CCI2B input, compare: Out2 output
XIN/ P2.6/ TA0.1	19	27	26	I/O	Input terminal of crystal oscillator General-purpose digital I/O pin Timer0_A, compare: Out1 output
XOUT/ P2.7	18	26	25	I/O	Output terminal of crystal oscillator (3) General-purpose digital I/O pin
P3.0/ TA0.2	-	9	7	I/O	General-purpose digital I/O pin Timer0_A, capture: CCI2A input, compare: Out2 output
P3.1/ TA1.0	-	8	6	I/O	General-purpose digital I/O pin Timer1_A, compare: Out0 output
P3.2/ TA1.1	-	13	12	I/O	General-purpose digital I/O pin Timer1_A, compare: Out1 output
P3.3/ TA1.2	-	14	13	I/O	General-purpose digital I/O Timer1_A, compare: Out2 output
P3.4/ TA0.0	-	15	14	I/O	General-purpose digital I/O Timer0_A, compare: Out0 output

(2) TDO or TDI is selected via JTAG instruction.
(3) If XOUT/P2.7 is used as an input, excess current flows until P2SEL.7 is cleared. This is due to the oscillator output driver connection to this pad after reset.

Copyright © 2011–2013, Texas Instruments Incorporated

Table 2. Terminal Functions (continued)

TERMINAL				I/O	DESCRIPTION
NAME	NO.				
	PW20, N20	PW28	RHB32		
P3.5/ TA0.1	-	19	18	I/O	General-purpose digital I/O Timer0_A, compare: Out1 output
P3.6/ TA0.2	-	20	19	I/O	General-purpose digital I/O Timer0_A, compare: Out2 output
P3.7/ TA1CLK/ CAOUT	-	21	20	I/O	General-purpose digital I/O Timer1_A, clock signal TACLK input Comparator_A+, output
$\overline{\text{RST}}$/ NMI/ SBWTDIO	16	24	23	I	Reset Nonmaskable interrupt input Spy-Bi-Wire test data input/output during programming and test
TEST/ SBWTCK	17	25	24	I	Selects test mode for JTAG pins on Port 1. The device protection fuse is connected to TEST. Spy-Bi-Wire test clock input during programming and test
AVCC	NA	NA	29	NA	Analog supply voltage
DVCC	1	1	30	NA	Digital supply voltage
DVSS	20	28	27, 28	NA	Ground reference
NC	NA	NA	8, 32	NA	Not connected
QFN Pad	NA	NA	Pad	NA	QFN package pad. Connection to VSS is recommended.

Copyright © 2011–2013, Texas Instruments Incorporated

SHORT-FORM DESCRIPTION

CPU

The MSP430 CPU has a 16-bit RISC architecture that is highly transparent to the application. All operations, other than program-flow instructions, are performed as register operations in conjunction with seven addressing modes for source operand and four addressing modes for destination operand.

The CPU is integrated with 16 registers that provide reduced instruction execution time. The register-to-register operation execution time is one cycle of the CPU clock.

Four of the registers, R0 to R3, are dedicated as program counter, stack pointer, status register, and constant generator, respectively. The remaining registers are general-purpose registers.

Peripherals are connected to the CPU using data, address, and control buses, and can be handled with all instructions.

The instruction set consists of the original 51 instructions with three formats and seven address modes and additional instructions for the expanded address range. Each instruction can operate on word and byte data.

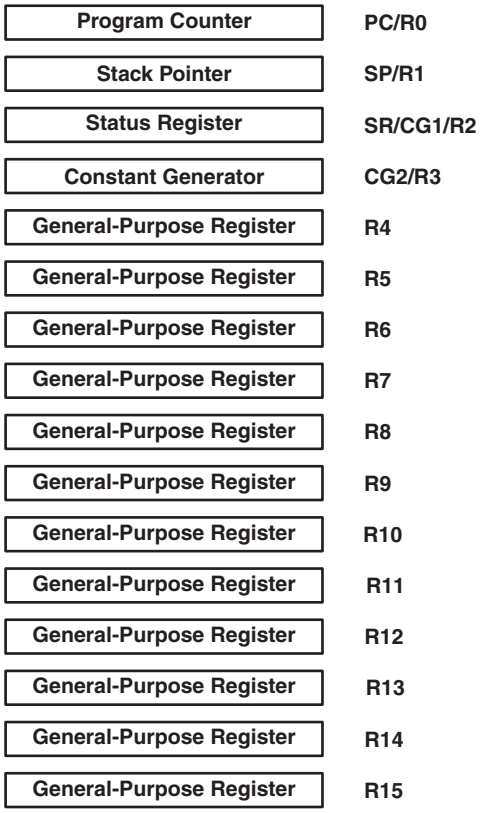

Instruction Set

The instruction set consists of 51 instructions with three formats and seven address modes. Each instruction can operate on word and byte data. Table 3 shows examples of the three types of instruction formats; Table 4 shows the address modes.

Table 3. Instruction Word Formats

INSTRUCTION FORMAT	EXAMPLE	OPERATION
Dual operands, source-destination	ADD R4,R5	R4 + R5 ---> R5
Single operands, destination only	CALL R8	PC -->(TOS), R8--> PC
Relative jump, un/conditional	JNE	Jump-on-equal bit = 0

Table 4. Address Mode Descriptions(1)

ADDRESS MODE	S	D	SYNTAX	EXAMPLE	OPERATION
Register	✓	✓	MOV Rs,Rd	MOV R10,R11	R10 -- --> R11
Indexed	✓	✓	MOV X(Rn),Y(Rm)	MOV 2(R5),6(R6)	M(2+R5) -- --> M(6+R6)
Symbolic (PC relative)	✓	✓	MOV EDE,TONI		M(EDE) -- --> M(TONI)
Absolute	✓	✓	MOV &MEM,&TCDAT		M(MEM) -- --> M(TCDAT)
Indirect	✓		MOV @Rn,Y(Rm)	MOV @R10,Tab(R6)	M(R10) -- --> M(Tab+R6)
Indirect autoincrement	✓		MOV @Rn+,Rm	MOV @R10+,R11	M(R10) -- --> R11 R10 + 2-- --> R10
Immediate	✓		MOV #X,TONI	MOV #45,TONI	#45 -- --> M(TONI)

(1) S = source, D = destination

Copyright © 2011–2013, Texas Instruments Incorporated

Operating Modes

The MSP430 has one active mode and five software selectable low-power modes of operation. An interrupt event can wake up the device from any of the low-power modes, service the request, and restore back to the low-power mode on return from the interrupt program.

The following six operating modes can be configured by software:

- Active mode (AM)
  - All clocks are active
- Low-power mode 0 (LPM0)
  - CPU is disabled
  - ACLK and SMCLK remain active, MCLK is disabled
- Low-power mode 1 (LPM1)
  - CPU is disabled
  - ACLK and SMCLK remain active, MCLK is disabled
  - DCO's dc generator is disabled if DCO not used in active mode
- Low-power mode 2 (LPM2)
  - CPU is disabled
  - MCLK and SMCLK are disabled
  - DCO's dc generator remains enabled
  - ACLK remains active
- Low-power mode 3 (LPM3)
  - CPU is disabled
  - MCLK and SMCLK are disabled
  - DCO's dc generator is disabled
  - ACLK remains active
- Low-power mode 4 (LPM4)
  - CPU is disabled
  - ACLK is disabled
  - MCLK and SMCLK are disabled
  - DCO's dc generator is disabled
  - Crystal oscillator is stopped

Copyright © 2011–2013, Texas Instruments Incorporated

Interrupt Vector Addresses

The interrupt vectors and the power-up starting address are located in the address range 0FFFFh to 0FFC0h. The vector contains the 16-bit address of the appropriate interrupt handler instruction sequence.

If the reset vector (located at address 0FFFEh) contains 0FFFFh (for example, flash is not programmed), the CPU goes into LPM4 immediately after power-up.

Table 5. Interrupt Sources, Flags, and Vectors

INTERRUPT SOURCE	INTERRUPT FLAG	SYSTEM INTERRUPT	WORD ADDRESS	PRIORITY
Power-Up External Reset Watchdog Timer+ Flash key violation PC out-of-range (1)	PORIFG RSTIFG WDTIFG KEYV (2)	Reset	0FFFEh	31, highest
NMI Oscillator fault Flash memory access violation	NMIIFG OFIFG ACCVIFG (2) (3)	(non)-maskable (non)-maskable (non)-maskable	0FFFCh	30
Timer1_A3	TA1CCR0 CCIFG (4)	maskable	0FFFAh	29
Timer1_A3	TA1CCR2 TA1CCR1 CCIFG, TAIFG (2) (4)	maskable	0FFF8h	28
Comparator_A+	CAIFG (4)	maskable	0FFF6h	27
Watchdog Timer+	WDTIFG	maskable	0FFF4h	26
Timer0_A3	TA0CCR0 CCIFG (4)	maskable	0FFF2h	25
Timer0_A3	TA0CCR2 TA0CCR1 CCIFG, TAIFG (5) (4)	maskable	0FFF0h	24
USCI_A0/USCI_B0 receive USCI_B0 I2C status	UCA0RXIFG, UCB0RXIFG (2) (5)	maskable	0FFEEh	23
USCI_A0/USCI_B0 transmit USCI_B0 I2C receive/transmit	UCA0TXIFG, UCB0TXIFG (2) (6)	maskable	0FFECh	22
ADC10 (MSP430G2x53 only)	ADC10IFG (4)	maskable	0FFEAh	21
			0FFE8h	20
I/O Port P2 (up to eight flags)	P2IFG.0 to P2IFG.7 (2) (4)	maskable	0FFE6h	19
I/O Port P1 (up to eight flags)	P1IFG.0 to P1IFG.7 (2) (4)	maskable	0FFE4h	18
			0FFE2h	17
			0FFE0h	16
See (7)			0FFDEh	15
See (8)			0FFDEh to 0FFC0h	14 to 0, lowest

(1) A reset is generated if the CPU tries to fetch instructions from within the module register memory address range (0h to 01FFh) or from within unused address ranges.
(2) Multiple source flags
(3) (non)-maskable: the individual interrupt-enable bit can disable an interrupt event, but the general interrupt enable cannot.
(4) Interrupt flags are located in the module.
(5) In SPI mode: UCB0RXIFG. In I2C mode: UCALIFG, UCNACKIFG, ICSTTIFG, UCSTPIFG.
(6) In UART or SPI mode: UCB0TXIFG. In I2C mode: UCB0RXIFG, UCB0TXIFG.
(7) This location is used as bootstrap loader security key (BSLSKEY). A 0xAA55 at this location disables the BSL completely. A zero (0h) disables the erasure of the flash if an invalid password is supplied.
(8) The interrupt vectors at addresses 0FFDEh to 0FFC0h are not used in this device and can be used for regular program code if necessary.

Copyright © 2011–2013, Texas Instruments Incorporated

Special Function Registers (SFRs)

Most interrupt and module enable bits are collected into the lowest address space. Special function register bits not allocated to a functional purpose are not physically present in the device. Simple software access is provided with this arrangement.

Legend	**rw:**	Bit can be read and written.
	rw-0,1:	Bit can be read and written. It is reset or set by PUC.
	rw-(0,1):	Bit can be read and written. It is reset or set by POR.
		SFR bit is not present in device.

Table 6. Interrupt Enable Register 1 and 2

Address	7	6	5	4	3	2	1	0
00h			**ACCVIE**	**NMIIE**			**OFIE**	**WDTIE**
			rw-0	rw-0			rw-0	rw-0

WDTIE	Watchdog Timer interrupt enable. Inactive if watchdog mode is selected. Active if Watchdog Timer is configured in interval timer mode.
OFIE	Oscillator fault interrupt enable
NMIIE	(Non)maskable interrupt enable
ACCVIE	Flash access violation interrupt enable

Address	7	6	5	4	3	2	1	0
01h					**UCB0TXIE**	**UCB0RXIE**	**UCA0TXIE**	**UCA0RXIE**
					rw-0	rw-0	rw-0	rw-0

UCA0RXIE	USCI_A0 receive interrupt enable
UCA0TXIE	USCI_A0 transmit interrupt enable
UCB0RXIE	USCI_B0 receive interrupt enable
UCB0TXIE	USCI_B0 transmit interrupt enable

Table 7. Interrupt Flag Register 1 and 2

Address	7	6	5	4	3	2	1	0
02h				**NMIIFG**	**RSTIFG**	**PORIFG**	**OFIFG**	**WDTIFG**
				rw-0	rw-(0)	rw-(1)	rw-1	rw-(0)

WDTIFG	Set on watchdog timer overflow (in watchdog mode) or security key violation. Reset on V_{CC} power-on or a reset condition at the $\overline{RST}$/NMI pin in reset mode.
OFIFG	Flag set on oscillator fault.
PORIFG	Power-On Reset interrupt flag. Set on V_{CC} power-up.
RSTIFG	External reset interrupt flag. Set on a reset condition at $\overline{RST}$/NMI pin in reset mode. Reset on V_{CC} power-up.
NMIIFG	Set via $\overline{RST}$/NMI pin

Address	7	6	5	4	3	2	1	0
03h					**UCB0TXIFG**	**UCB0RXIFG**	**UCA0TXIFG**	**UCA0RXIFG**
					rw-1	rw-0	rw-1	rw-0

UCA0RXIFG	USCI_A0 receive interrupt flag
UCA0TXIFG	USCI_A0 transmit interrupt flag
UCB0RXIFG	USCI_B0 receive interrupt flag
UCB0TXIFG	USCI_B0 transmit interrupt flag

Copyright © 2011–2013, Texas Instruments Incorporated

Memory Organization

Table 8. Memory Organization

		MSP430G2153	MSP430G2253 MSP430G2213	MSP430G2353 MSP430G2313	MSP430G2453 MSP430G2413	MSP430G2553 MSP430G2513
Memory	Size	1kB	2kB	4kB	8kB	16kB
Main: interrupt vector	Flash	0xFFFF to 0xFFC0	0xFFFF to 0xFFC0	0xFFFF to 0xFFC0	0xFFFF to 0xFFC0	0xFFFF to 0xFFC0
Main: code memory	Flash	0xFFFF to 0xFC00	0xFFFF to 0xF800	0xFFFF to 0xF000	0xFFFF to 0xE000	0xFFFF to 0xC000
Information memory	Size	256 Byte	256 Byte	256 Byte	256 Byte	256 Byte
	Flash	010FFh to 01000h	010FFh to 01000h	010FFh to 01000h	010FFh to 01000h	010FFh to 01000h
RAM	Size	256 Byte	256 Byte	256 Byte	512 Byte	512 Byte
		0x02FF to 0x0200	0x02FF to 0x0200	0x02FF to 0x0200	0x03FF to 0x0200	0x03FF to 0x0200
Peripherals	16-bit	01FFh to 0100h	01FFh to 0100h	01FFh to 0100h	01FFh to 0100h	01FFh to 0100h
	8-bit	0FFh to 010h	0FFh to 010h	0FFh to 010h	0FFh to 010h	0FFh to 010h
	8-bit SFR	0Fh to 00h	0Fh to 00h	0Fh to 00h	0Fh to 00h	0Fh to 00h

Bootstrap Loader (BSL)

The MSP430 BSL enables users to program the flash memory or RAM using a UART serial interface. Access to the MSP430 memory via the BSL is protected by user-defined password. For complete description of the features of the BSL and its implementation, see the *MSP430 Programming Via the Bootstrap Loader User's Guide* (SLAU319).

Table 9. BSL Function Pins

BSL FUNCTION	20-PIN PW PACKAGE 20-PIN N PACKAGE	28-PIN PACKAGE PW	32-PIN PACKAGE RHB
Data transmit	3 - P1.1	3 - P1.1	1 - P1.1
Data receive	7 - P1.5	7 - P1.5	5 - P1.5

Flash Memory

The flash memory can be programmed via the Spy-Bi-Wire/JTAG port or in-system by the CPU. The CPU can perform single-byte and single-word writes to the flash memory. Features of the flash memory include:

- Flash memory has n segments of main memory and four segments of information memory (A to D) of 64 bytes each. Each segment in main memory is 512 bytes in size.
- Segments 0 to n may be erased in one step, or each segment may be individually erased.
- Segments A to D can be erased individually or as a group with segments 0 to n. Segments A to D are also called *information memory*.
- Segment A contains calibration data. After reset segment A is protected against programming and erasing. It can be unlocked but care should be taken not to erase this segment if the device-specific calibration data is required.

Peripherals

Peripherals are connected to the CPU through data, address, and control buses and can be handled using all instructions. For complete module descriptions, see the *MSP430x2xx Family User's Guide* (SLAU144).

Oscillator and System Clock

The clock system is supported by the basic clock module that includes support for a 32768-Hz watch crystal oscillator, an internal very-low-power low-frequency oscillator and an internal digitally controlled oscillator (DCO). The basic clock module is designed to meet the requirements of both low system cost and low power consumption. The internal DCO provides a fast turn-on clock source and stabilizes in less than 1 µs. The basic clock module provides the following clock signals:

- Auxiliary clock (ACLK), sourced either from a 32768-Hz watch crystal or the internal LF oscillator.
- Main clock (MCLK), the system clock used by the CPU.
- Sub-Main clock (SMCLK), the sub-system clock used by the peripheral modules.

The DCO settings to calibrate the DCO output frequency are stored in the information memory segment A.

Main DCO Characteristics

- All ranges selected by RSELx overlap with RSELx + 1: RSELx = 0 overlaps RSELx = 1, ... RSELx = 14 overlaps RSELx = 15.
- DCO control bits DCOx have a step size as defined by parameter S_{DCO}.
- Modulation control bits MODx select how often $f_{DCO(RSEL,DCO+1)}$ is used within the period of 32 DCOCLK cycles. The frequency $f_{DCO(RSEL,DCO)}$ is used for the remaining cycles. The frequency is an average equal to:

$$f_{average} = \frac{32 \times f_{DCO(RSEL,DCO)} \times f_{DCO(RSEL,DCO+1)}}{MOD \times f_{DCO(RSEL,DCO)} + (32 - MOD) \times f_{DCO(RSEL,DCO+1)}}$$

Copyright © 2011–2013, Texas Instruments Incorporated

Calibration Data Stored in Information Memory Segment A

Calibration data is stored for both the DCO and for ADC10 organized in a tag-length-value structure.

Table 10. Tags Used by the ADC Calibration Tags

NAME	ADDRESS	VALUE	DESCRIPTION
TAG_DCO_30	0x10F6	0x01	DCO frequency calibration at V_{CC} = 3 V and T_A = 30°C at calibration
TAG_ADC10_1	0x10DA	0x10	ADC10_1 calibration tag
TAG_EMPTY	-	0xFE	Identifier for empty memory areas

Table 11. Labels Used by the ADC Calibration Tags

LABEL	ADDRESS OFFSET	SIZE	CONDITION AT CALIBRATION AND DESCRIPTION
CAL_ADC_25T85	0x0010	word	INCHx = 0x1010, REF2_5 = 1, T_A = 85°C
CAL_ADC_25T30	0x000E	word	INCHx = 0x1010, REF2_5 = 1, T_A = 30°C
CAL_ADC_25VREF_FACTOR	0x000C	word	REF2_5 = 1, T_A = 30°C, I_{VREF+} = 1 mA
CAL_ADC_15T85	0x000A	word	INCHx = 0x1010, REF2_5 = 0, T_A = 85°C
CAL_ADC_15T30	0x0008	word	INCHx = 0x1010, REF2_5 = 0, T_A = 30°C
CAL_ADC_15VREF_FACTOR	0x0006	word	REF2_5 = 0, T_A = 30°C, I_{VREF+} = 0.5 mA
CAL_ADC_OFFSET	0x0004	word	External VREF = 1.5 V, $f_{ADC10CLK}$ = 5 MHz
CAL_ADC_GAIN_FACTOR	0x0002	word	External VREF = 1.5 V, $f_{ADC10CLK}$ = 5 MHz
CAL_BC1_1MHZ	0x0009	byte	-
CAL_DCO_1MHZ	0x0008	byte	-
CAL_BC1_8MHZ	0x0007	byte	-
CAL_DCO_8MHZ	0x0006	byte	-
CAL_BC1_12MHZ	0x0005	byte	-
CAL_DCO_12MHZ	0x0004	byte	-
CAL_BC1_16MHZ	0x0003	byte	-
CAL_DCO_16MHZ	0x0002	byte	-

Brownout

The brownout circuit is implemented to provide the proper internal reset signal to the device during power on and power off.

Digital I/O

Up to three 8-bit I/O ports are implemented:

- All individual I/O bits are independently programmable.
- Any combination of input, output, and interrupt condition (port P1 and port P2 only) is possible.
- Edge-selectable interrupt input capability for all bits of port P1 and port P2 (if available).
- Read/write access to port-control registers is supported by all instructions.
- Each I/O has an individually programmable pullup or pulldown resistor.
- Each I/O has an individually programmable pin oscillator enable bit to enable low-cost capacitive touch detection.

Watchdog Timer (WDT+)

The primary function of the watchdog timer (WDT+) module is to perform a controlled system restart after a software problem occurs. If the selected time interval expires, a system reset is generated. If the watchdog function is not needed in an application, the module can be disabled or configured as an interval timer and can generate interrupts at selected time intervals.

Copyright © 2011–2013, Texas Instruments Incorporated

Timer_A3 (TA0, TA1)

Timer0/1_A3 is a 16-bit timer/counter with three capture/compare registers. Timer_A3 can support multiple capture/compares, PWM outputs, and interval timing. Timer_A3 also has extensive interrupt capabilities. Interrupts may be generated from the counter on overflow conditions and from each of the capture/compare registers.

Table 12. Timer0_A3 Signal Connections

INPUT PIN NUMBER			DEVICE INPUT SIGNAL	MODULE INPUT NAME	MODULE BLOCK	MODULE OUTPUT SIGNAL	OUTPUT PIN NUMBER		
PW20, N20	PW28	RHB32					PW20, N20	PW28	RHB32
P1.0-2	P1.0-2	P1.0-31	TACLK	TACLK	Timer	NA			
			ACLK	ACLK					
			SMCLK	SMCLK					
PinOsc	PinOsc	PinOsc	TACLK	INCLK					
P1.1-3	P1.1-3	P1.1-1	TA0.0	CCI0A	CCR0	TA0	P1.1-3	P1.1-3	P1.1-1
			ACLK	CCI0B			P1.5-7	P1.5-7	P1.5-5
			V_{SS}	GND				P3.4-15	P3.4-14
			V_{CC}	V_{CC}					
P1.2-4	P1.2-4	P1.2-2	TA0.1	CCI1A	CCR1	TA1	P1.2-4	P1.2-4	P1.2-2
			CAOUT	CCI1B			P1.6-14	P1.6-22	P1.6-21
			V_{SS}	GND			P2.6-19	P2.6-27	P2.6-26
			V_{CC}	V_{CC}				P3.5-19	P3.5-18
	P3.0-9	P3.0-7	TA0.2	CCI2A	CCR2	TA2		P3.0-9	P3.0-7
PinOsc	PinOsc	PinOsc	TA0.2	CCI2B				P3.6-20	P3.6-19
			V_{SS}	GND					
			V_{CC}	V_{CC}					

Table 13. Timer1_A3 Signal Connections

INPUT PIN NUMBER			DEVICE INPUT SIGNAL	MODULE INPUT NAME	MODULE BLOCK	MODULE OUTPUT SIGNAL	OUTPUT PIN NUMBER		
PW20, N20	PW28	RHB32					PW20, N20	PW28	RHB32
-	P3.7-21	P3.7-20	TACLK	TACLK	Timer	NA			
			ACLK	ACLK					
			SMCLK	SMCLK					
-	P3.7-21	P3.7-20	TACLK	INCLK					
P2.0-8	P2.0-10	P2.0-9	TA1.0	CCI0A	CCR0	TA0	P2.0-8	P2.0-10	P2.0-9
P2.3-11	P2.3-16	P2.3-12	TA1.0	CCI0B			P2.3-11	P2.3-16	P2.3-15
			V_{SS}	GND				P3.1-8	P3.1-6
			V_{CC}	V_{CC}					
P2.1-9	P2.1-11	P2.1-10	TA1.1	CCI1A	CCR1	TA1	P2.1-9	P2.1-11	P2.1-10
P2.2-10	P2.2-12	P2.2-11	TA1.1	CCI1B			P2.2-10	P2.2-12	P2.2-11
			V_{SS}	GND				P3.2-13	P3.2-12
			V_{CC}	V_{CC}					
P2.4-12	P2.4-17	P2.4-16	TA1.2	CCI2A	CCR2	TA2	P2.4-12	P2.4-17	P2.4-16
P2.5-13	P2.5-18	P2.5-17	TA1.2	CCI2B			P2.5-13	P2.5-18	P2.5-17
			V_{SS}	GND				P3.3-14	P3.3-13
			V_{CC}	V_{CC}					

Copyright © 2011–2013, Texas Instruments Incorporated

Universal Serial Communications Interface (USCI)

The USCI module is used for serial data communication. The USCI module supports synchronous communication protocols such as SPI (3 or 4 pin) and I2C, and asynchronous communication protocols such as UART, enhanced UART with automatic baudrate detection (LIN), and IrDA. Not all packages support the USCI functionality.

USCI_A0 provides support for SPI (3 or 4 pin), UART, enhanced UART, and IrDA.

USCI_B0 provides support for SPI (3 or 4 pin) and I2C.

Comparator_A+

The primary function of the comparator_A+ module is to support precision slope analog-to-digital conversions, battery-voltage supervision, and monitoring of external analog signals.

ADC10 (MSP430G2x53 Only)

The ADC10 module supports fast 10-bit analog-to-digital conversions. The module implements a 10-bit SAR core, sample select control, reference generator, and data transfer controller (DTC) for automatic conversion result handling, allowing ADC samples to be converted and stored without any CPU intervention.

Copyright © 2011–2013, Texas Instruments Incorporated

Peripheral File Map

Table 14. Peripherals With Word Access

MODULE	REGISTER DESCRIPTION	REGISTER NAME	OFFSET
ADC10 (MSP430G2x53 devices only)	ADC data transfer start address	ADC10SA	1BCh
	ADC memory	ADC10MEM	1B4h
	ADC control register 1	ADC10CTL1	1B2h
	ADC control register 0	ADC10CTL0	1B0h
Timer1_A3	Capture/compare register	TA1CCR2	0196h
	Capture/compare register	TA1CCR1	0194h
	Capture/compare register	TA1CCR0	0192h
	Timer_A register	TA1R	0190h
	Capture/compare control	TA1CCTL2	0186h
	Capture/compare control	TA1CCTL1	0184h
	Capture/compare control	TA1CCTL0	0182h
	Timer_A control	TA1CTL	0180h
	Timer_A interrupt vector	TA1IV	011Eh
Timer0_A3	Capture/compare register	TA0CCR2	0176h
	Capture/compare register	TA0CCR1	0174h
	Capture/compare register	TA0CCR0	0172h
	Timer_A register	TA0R	0170h
	Capture/compare control	TA0CCTL2	0166h
	Capture/compare control	TA0CCTL1	0164h
	Capture/compare control	TA0CCTL0	0162h
	Timer_A control	TA0CTL	0160h
	Timer_A interrupt vector	TA0IV	012Eh
Flash Memory	Flash control 3	FCTL3	012Ch
	Flash control 2	FCTL2	012Ah
	Flash control 1	FCTL1	0128h
Watchdog Timer+	Watchdog/timer control	WDTCTL	0120h

Copyright © 2011–2013, Texas Instruments Incorporated

Table 15. Peripherals With Byte Access

MODULE	REGISTER DESCRIPTION	REGISTER NAME	OFFSET
USCI_B0	USCI_B0 transmit buffer	UCB0TXBUF	06Fh
	USCI_B0 receive buffer	UCB0RXBUF	06Eh
	USCI_B0 status	UCB0STAT	06Dh
	USCI B0 I2C Interrupt enable	UCB0CIE	06Ch
	USCI_B0 bit rate control 1	UCB0BR1	06Bh
	USCI_B0 bit rate control 0	UCB0BR0	06Ah
	USCI_B0 control 1	UCB0CTL1	069h
	USCI_B0 control 0	UCB0CTL0	068h
	USCI_B0 I2C slave address	UCB0SA	011Ah
	USCI_B0 I2C own address	UCB0OA	0118h
USCI_A0	USCI_A0 transmit buffer	UCA0TXBUF	067h
	USCI_A0 receive buffer	UCA0RXBUF	066h
	USCI_A0 status	UCA0STAT	065h
	USCI_A0 modulation control	UCA0MCTL	064h
	USCI_A0 baud rate control 1	UCA0BR1	063h
	USCI_A0 baud rate control 0	UCA0BR0	062h
	USCI_A0 control 1	UCA0CTL1	061h
	USCI_A0 control 0	UCA0CTL0	060h
	USCI_A0 IrDA receive control	UCA0IRRCTL	05Fh
	USCI_A0 IrDA transmit control	UCA0IRTCTL	05Eh
	USCI_A0 auto baud rate control	UCA0ABCTL	05Dh
ADC10 (MSP430G2x53 devices only)	ADC analog enable 0	ADC10AE0	04Ah
	ADC analog enable 1	ADC10AE1	04Bh
	ADC data transfer control register 1	ADC10DTC1	049h
	ADC data transfer control register 0	ADC10DTC0	048h
Comparator_A+	Comparator_A+ port disable	CAPD	05Bh
	Comparator_A+ control 2	CACTL2	05Ah
	Comparator_A+ control 1	CACTL1	059h
Basic Clock System+	Basic clock system control 3	BCSCTL3	053h
	Basic clock system control 2	BCSCTL2	058h
	Basic clock system control 1	BCSCTL1	057h
	DCO clock frequency control	DCOCTL	056h
Port P3 (28-pin PW and 32-pin RHB only)	Port P3 selection 2. pin	P3SEL2	043h
	Port P3 resistor enable	P3REN	010h
	Port P3 selection	P3SEL	01Bh
	Port P3 direction	P3DIR	01Ah
	Port P3 output	P3OUT	019h
	Port P3 input	P3IN	018h
Port P2	Port P2 selection 2	P2SEL2	042h
	Port P2 resistor enable	P2REN	02Fh
	Port P2 selection	P2SEL	02Eh
	Port P2 interrupt enable	P2IE	02Dh
	Port P2 interrupt edge select	P2IES	02Ch
	Port P2 interrupt flag	P2IFG	02Bh
	Port P2 direction	P2DIR	02Ah
	Port P2 output	P2OUT	029h
	Port P2 input	P2IN	028h

Copyright © 2011–2013, Texas Instruments Incorporated

Table 15. Peripherals With Byte Access (continued)

MODULE	REGISTER DESCRIPTION	REGISTER NAME	OFFSET
Port P1	Port P1 selection 2	P1SEL2	041h
	Port P1 resistor enable	P1REN	027h
	Port P1 selection	P1SEL	026h
	Port P1 interrupt enable	P1IE	025h
	Port P1 interrupt edge select	P1IES	024h
	Port P1 interrupt flag	P1IFG	023h
	Port P1 direction	P1DIR	022h
	Port P1 output	P1OUT	021h
	Port P1 input	P1IN	020h
Special Function	SFR interrupt flag 2	IFG2	003h
	SFR interrupt flag 1	IFG1	002h
	SFR interrupt enable 2	IE2	001h
	SFR interrupt enable 1	IE1	000h

Copyright © 2011–2013, Texas Instruments Incorporated

Absolute Maximum Ratings[1]

Voltage applied at V_{CC} to V_{SS}		–0.3 V to 4.1 V
Voltage applied to any pin[2]		–0.3 V to V_{CC} + 0.3 V
Diode current at any device pin		±2 mA
Storage temperature range, T_{stg}[3]	Unprogrammed device	–55°C to 150°C
	Programmed device	–55°C to 150°C

(1) Stresses beyond those listed under "absolute maximum ratings" may cause permanent damage to the device. These are stress ratings only, and functional operation of the device at these or any other conditions beyond those indicated under "recommended operating conditions" is not implied. Exposure to absolute-maximum-rated conditions for extended periods may affect device reliability.
(2) All voltages referenced to V_{SS}. The JTAG fuse-blow voltage, V_{FB}, is allowed to exceed the absolute maximum rating. The voltage is applied to the TEST pin when blowing the JTAG fuse.
(3) Higher temperature may be applied during board soldering according to the current JEDEC J-STD-020 specification with peak reflow temperatures not higher than classified on the device label on the shipping boxes or reels.

Recommended Operating Conditions

Typical values are specified at V_{CC} = 3.3 V and T_A = 25°C (unless otherwise noted)

			MIN	NOM	MAX	UNIT
V_{CC}	Supply voltage	During program execution	1.8		3.6	V
		During flash programming or erase	2.2		3.6	
V_{SS}	Supply voltage			0		V
T_A	Operating free-air temperature	I version	–40		85	°C
f_{SYSTEM}	Processor frequency (maximum MCLK frequency)[1][2]	V_{CC} = 1.8 V, Duty cycle = 50% ± 10%	dc		6	MHz
		V_{CC} = 2.7 V, Duty cycle = 50% ± 10%	dc		12	
		V_{CC} = 3.3 V, Duty cycle = 50% ± 10%	dc		16	

(1) The MSP430 CPU is clocked directly with MCLK. Both the high and low phase of MCLK must not exceed the pulse duration of the specified maximum frequency.
(2) Modules might have a different maximum input clock specification. See the specification of the respective module in this data sheet.

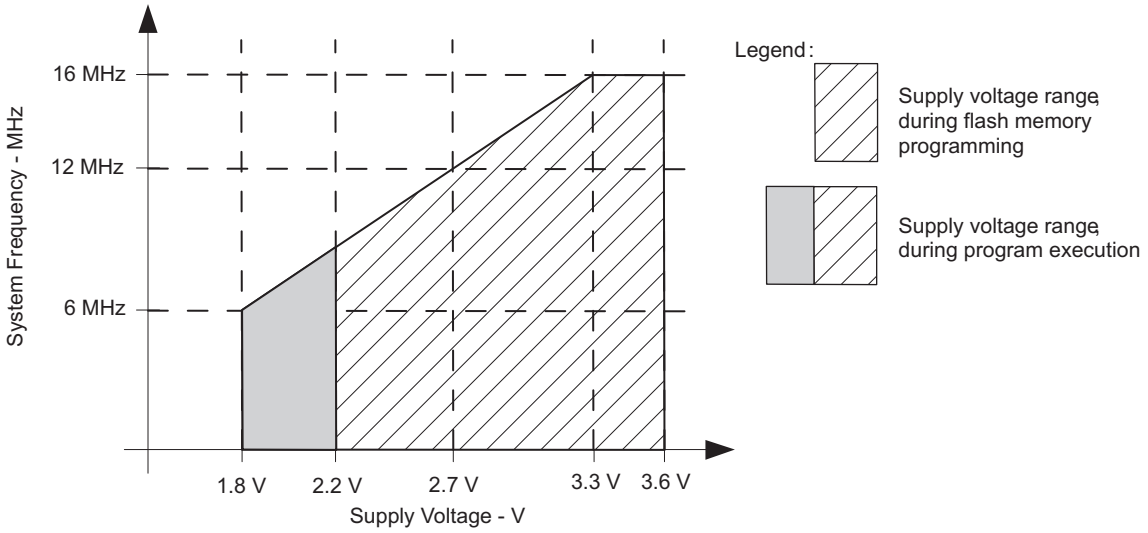

Note: Minimum processor frequency is defined by system clock. Flash program or erase operations require a minimum V_{CC} of 2.2 V.

Figure 1. Safe Operating Area

Electrical Characteristics

Active Mode Supply Current Into V_{CC} Excluding External Current

over recommended ranges of supply voltage and operating free-air temperature (unless otherwise noted)(1)(2)

PARAMETER		TEST CONDITIONS	T_A	V_{CC}	MIN	TYP	MAX	UNIT
$I_{AM,1MHz}$	Active mode (AM) current at 1 MHz	$f_{DCO} = f_{MCLK} = f_{SMCLK} = 1$ MHz, $f_{ACLK} = 0$ Hz, Program executes in flash, BCSCTL1 = CALBC1_1MHZ, DCOCTL = CALDCO_1MHZ, CPUOFF = 0, SCG0 = 0, SCG1 = 0, OSCOFF = 0		2.2 V		230		µA
				3 V		330	420	

(1) All inputs are tied to 0 V or to V_{CC}. Outputs do not source or sink any current.
(2) The currents are characterized with a Micro Crystal CC4V-T1A SMD crystal with a load capacitance of 9 pF. The internal and external load capacitance is chosen to closely match the required 9 pF.

Typical Characteristics, Active Mode Supply Current (Into V_{CC})

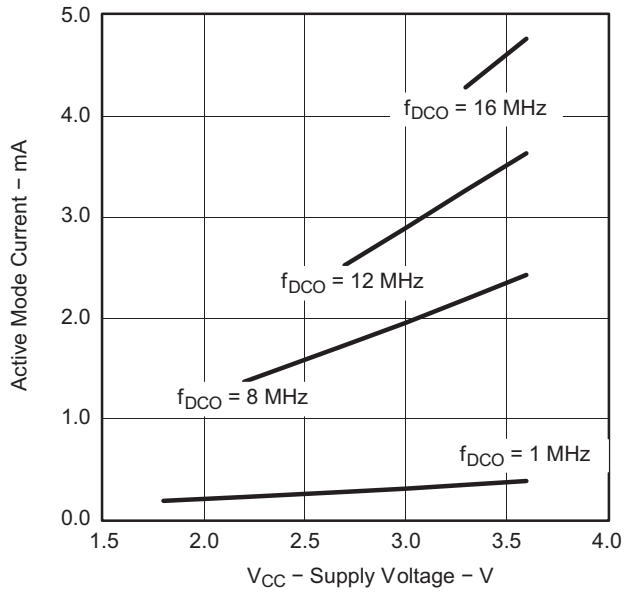

Figure 2. Active Mode Current vs V_{CC}, T_A = 25°C

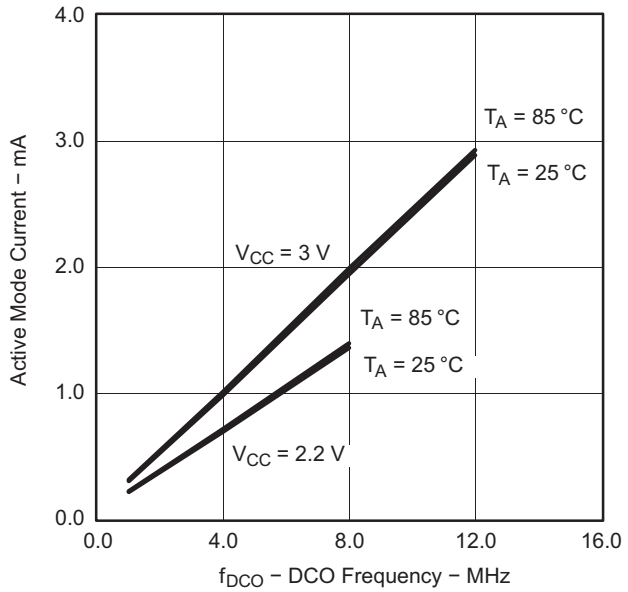

Figure 3. Active Mode Current vs DCO Frequency

Copyright © 2011–2013, Texas Instruments Incorporated

Low-Power Mode Supply Currents (Into V_{CC}) Excluding External Current

over recommended ranges of supply voltage and operating free-air temperature (unless otherwise noted)(1) (2)

PARAMETER		TEST CONDITIONS	T_A	V_{CC}	MIN	TYP	MAX	UNIT
$I_{LPM0,1MHz}$	Low-power mode 0 (LPM0) current(3)	f_{MCLK} = 0 MHz, f_{SMCLK} = f_{DCO} = 1 MHz, f_{ACLK} = 32768 Hz, BCSCTL1 = CALBC1_1MHZ, DCOCTL = CALDCO_1MHZ, CPUOFF = 1, SCG0 = 0, SCG1 = 0, OSCOFF = 0	25°C	2.2 V		56		µA
I_{LPM2}	Low-power mode 2 (LPM2) current(4)	f_{MCLK} = f_{SMCLK} = 0 MHz, f_{DCO} = 1 MHz, f_{ACLK} = 32768 Hz, BCSCTL1 = CALBC1_1MHZ, DCOCTL = CALDCO_1MHZ, CPUOFF = 1, SCG0 = 0, SCG1 = 1, OSCOFF = 0	25°C	2.2 V		22		µA
$I_{LPM3,LFXT1}$	Low-power mode 3 (LPM3) current(4)	f_{DCO} = f_{MCLK} = f_{SMCLK} = 0 MHz, f_{ACLK} = 32768 Hz, CPUOFF = 1, SCG0 = 1, SCG1 = 1, OSCOFF = 0	25°C	2.2 V		0.7	1.5	µA
$I_{LPM3,VLO}$	Low-power mode 3 current, (LPM3)(4)	f_{DCO} = f_{MCLK} = f_{SMCLK} = 0 MHz, f_{ACLK} from internal LF oscillator (VLO), CPUOFF = 1, SCG0 = 1, SCG1 = 1, OSCOFF = 0	25°C	2.2 V		0.5	0.7	µA
I_{LPM4}	Low-power mode 4 (LPM4) current(5)	f_{DCO} = f_{MCLK} = f_{SMCLK} = 0 MHz, f_{ACLK} = 0 Hz, CPUOFF = 1, SCG0 = 1, SCG1 = 1, OSCOFF = 1	25°C	2.2 V		0.1	0.5	µA
			85°C			0.8	1.7	

(1) All inputs are tied to 0 V or to V_{CC}. Outputs do not source or sink any current.
(2) The currents are characterized with a Micro Crystal CC4V-T1A SMD crystal with a load capacitance of 9 pF. The internal and external load capacitance is chosen to closely match the required 9 pF.
(3) Current for brownout and WDT clocked by SMCLK included.
(4) Current for brownout and WDT clocked by ACLK included.
(5) Current for brownout included.

Typical Characteristics, Low-Power Mode Supply Currents

over recommended ranges of supply voltage and operating free-air temperature (unless otherwise noted)

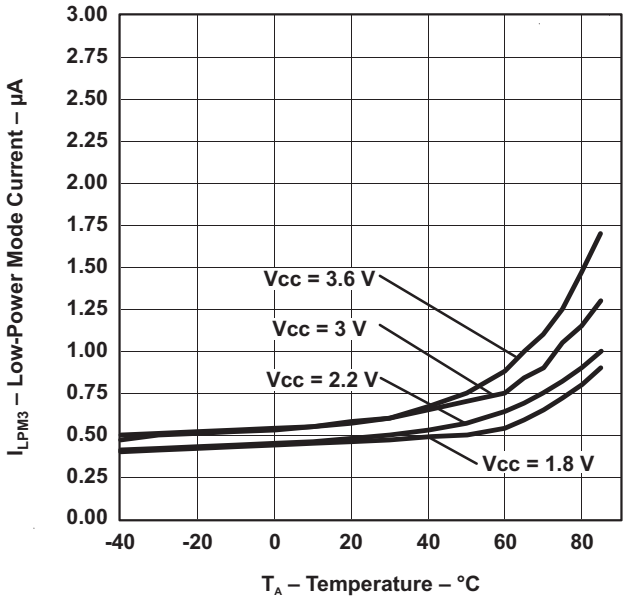

Figure 4. LPM3 Current vs Temperature

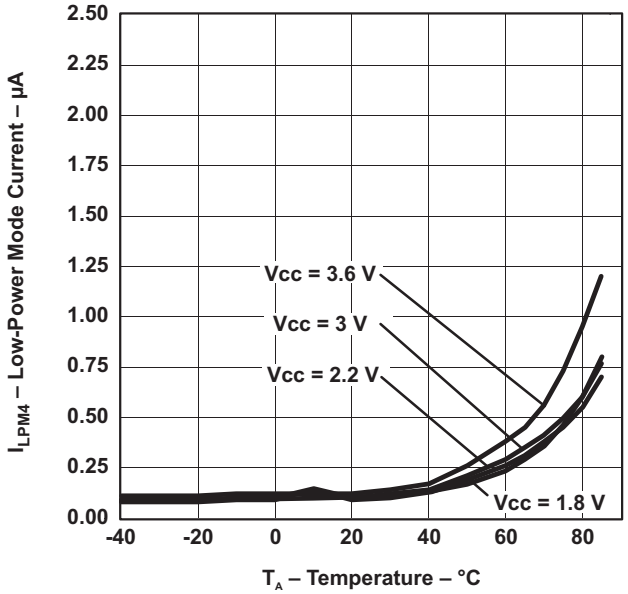

Figure 5. LPM4 Current vs Temperature

Schmitt-Trigger Inputs, Ports Px

over recommended ranges of supply voltage and operating free-air temperature (unless otherwise noted)

PARAMETER		TEST CONDITIONS	V_{CC}	MIN	TYP	MAX	UNIT
V_{IT+}	Positive-going input threshold voltage			0.45 V_{CC}		0.75 V_{CC}	V
			3 V	1.35		2.25	
V_{IT-}	Negative-going input threshold voltage			0.25 V_{CC}		0.55 V_{CC}	V
			3 V	0.75		1.65	
V_{hys}	Input voltage hysteresis ($V_{IT+} – V_{IT-}$)		3 V	0.3		1	V
R_{Pull}	Pullup/pulldown resistor	For pullup: $V_{IN} = V_{SS}$ For pulldown: $V_{IN} = V_{CC}$	3 V	20	35	50	kΩ
C_I	Input capacitance	$V_{IN} = V_{SS}$ or V_{CC}			5		pF

Leakage Current, Ports Px

over recommended ranges of supply voltage and operating free-air temperature (unless otherwise noted)

PARAMETER		TEST CONDITIONS	V_{CC}	MIN	MAX	UNIT
$I_{lkg(Px.y)}$	High-impedance leakage current	(1) (2)	3 V		±50	nA

(1) The leakage current is measured with V_{SS} or V_{CC} applied to the corresponding pin(s), unless otherwise noted.
(2) The leakage of the digital port pins is measured individually. The port pin is selected for input and the pullup/pulldown resistor is disabled.

Outputs, Ports Px

over recommended ranges of supply voltage and operating free-air temperature (unless otherwise noted)

PARAMETER		TEST CONDITIONS	V_{CC}	MIN	TYP	MAX	UNIT
V_{OH}	High-level output voltage	$I_{(OHmax)} = –6$ mA(1)	3 V		$V_{CC} – 0.3$		V
V_{OL}	Low-level output voltage	$I_{(OLmax)} = 6$ mA(1)	3 V		$V_{SS} + 0.3$		V

(1) The maximum total current, $I_{(OHmax)}$ and $I_{(OLmax)}$, for all outputs combined should not exceed ±48 mA to hold the maximum voltage drop specified.

Output Frequency, Ports Px

over recommended ranges of supply voltage and operating free-air temperature (unless otherwise noted)

PARAMETER		TEST CONDITIONS	V_{CC}	MIN	TYP	MAX	UNIT
$f_{Px.y}$	Port output frequency (with load)	Px.y, $C_L = 20$ pF, $R_L = 1$ kΩ(1) (2)	3 V		12		MHz
f_{Port_CLK}	Clock output frequency	Px.y, $C_L = 20$ pF(2)	3 V		16		MHz

(1) A resistive divider with two 0.5-kΩ resistors between V_{CC} and V_{SS} is used as load. The output is connected to the center tap of the divider.
(2) The output voltage reaches at least 10% and 90% V_{CC} at the specified toggle frequency.

Copyright © 2011–2013, Texas Instruments Incorporated

Typical Characteristics, Outputs

over recommended ranges of supply voltage and operating free-air temperature (unless otherwise noted)

TYPICAL LOW-LEVEL OUTPUT CURRENT vs LOW-LEVEL OUTPUT VOLTAGE

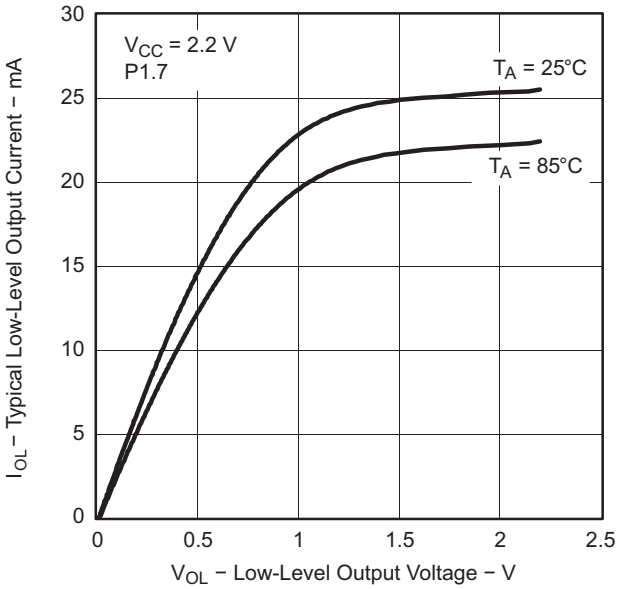

Figure 6.

TYPICAL LOW-LEVEL OUTPUT CURRENT vs LOW-LEVEL OUTPUT VOLTAGE

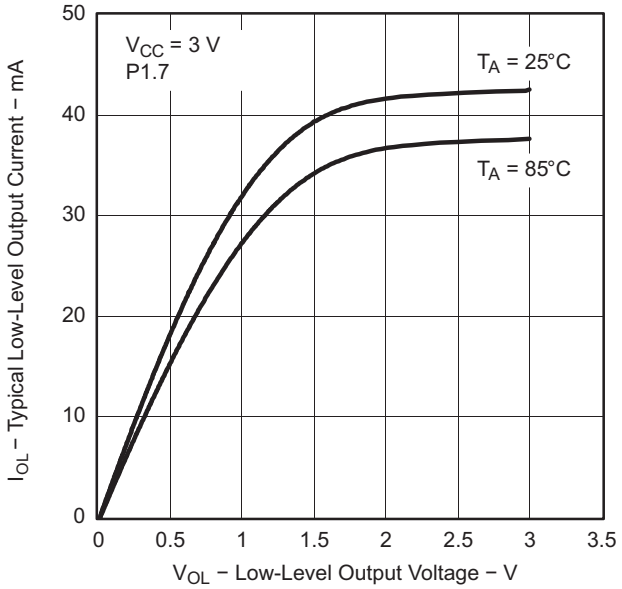

Figure 7.

TYPICAL HIGH-LEVEL OUTPUT CURRENT vs HIGH-LEVEL OUTPUT VOLTAGE

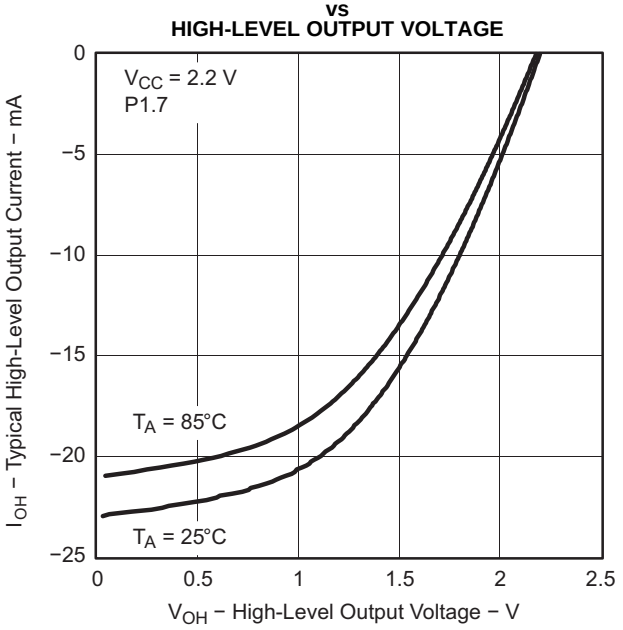

Figure 8.

TYPICAL HIGH-LEVEL OUTPUT CURRENT vs HIGH-LEVEL OUTPUT VOLTAGE

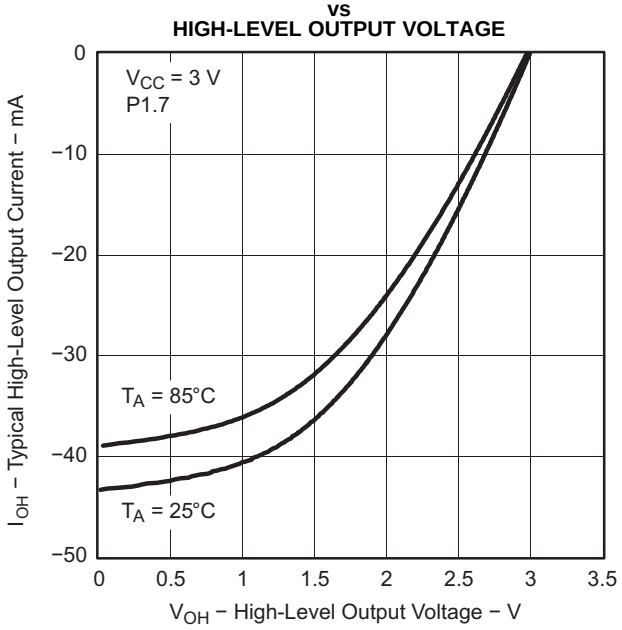

Figure 9.

Pin-Oscillator Frequency – Ports Px

over recommended ranges of supply voltage and operating free-air temperature (unless otherwise noted)

PARAMETER		TEST CONDITIONS	V_{CC}	MIN	TYP	MAX	UNIT
$fo_{P1.x}$	Port output oscillation frequency	P1.y, C_L = 10 pF, R_L = 100 kΩ(1)(2)	3 V		1400		kHz
		P1.y, C_L = 20 pF, R_L = 100 kΩ(1)(2)			900		
$fo_{P2.x}$	Port output oscillation frequency	P2.0 to P2.5, C_L = 10 pF, R_L = 100 kΩ(1)(2)			1800		kHz
		P2.0 to P2.5, C_L = 20 pF, R_L = 100 kΩ(1)(2)	3 V		1000		
$fo_{P2.6/7}$	Port output oscillation frequency	P2.6 and P2.7, C_L = 20 pF, R_L = 100 kΩ(1)(2)	3 V		700		kHz
$fo_{P3.x}$	Port output oscillation frequency	P3.y, C_L = 10 pF, R_L = 100 kΩ(1)(2)			1800		kHz
		P3.y, C_L = 20 pF, R_L = 100 kΩ(1)(2)			1000		

(1) A resistive divider with two 50-kΩ resistors between V_{CC} and V_{SS} is used as load. The output is connected to the center tap of the divider.
(2) The output voltage reaches at least 10% and 90% V_{CC} at the specified toggle frequency.

Typical Characteristics, Pin-Oscillator Frequency

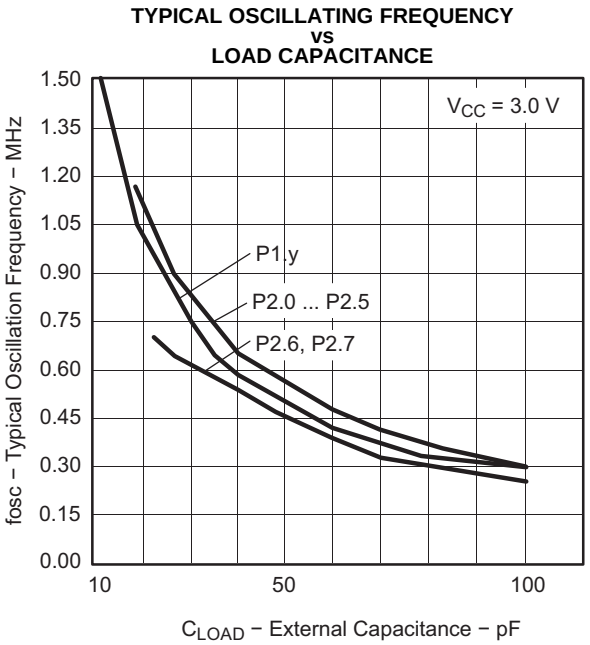

A. One output active at a time.

Figure 10.

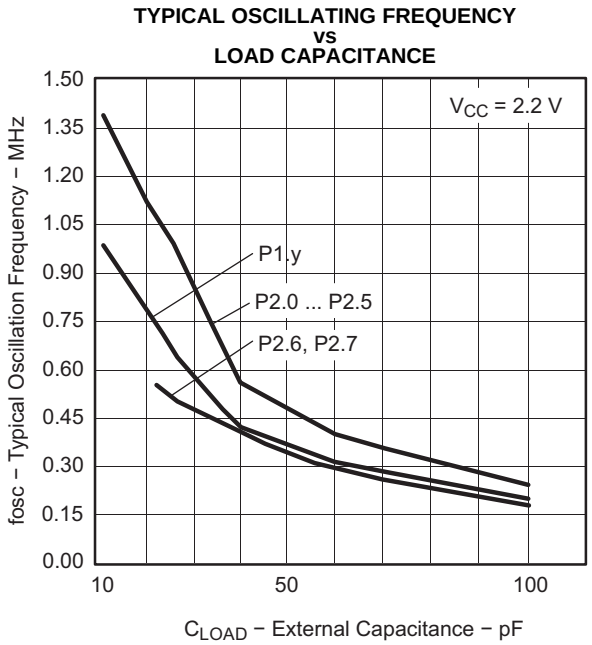

A. One output active at a time.

Figure 11.

Copyright © 2011–2013, Texas Instruments Incorporated

POR, BOR(1)(2)

over recommended ranges of supply voltage and operating free-air temperature (unless otherwise noted)

PARAMETER		TEST CONDITIONS	V_{CC}	MIN	TYP	MAX	UNIT
$V_{CC(start)}$	See Figure 12	$dV_{CC}/dt \le 3$ V/s			0.7 × $V_{(B_IT-)}$		V
$V_{(B_IT-)}$	See Figure 12 through Figure 14	$dV_{CC}/dt \le 3$ V/s			1.35		V
$V_{hys(B_IT-)}$	See Figure 12	$dV_{CC}/dt \le 3$ V/s			140		mV
$t_{d(BOR)}$	See Figure 12				2000		µs
$t_{(reset)}$	Pulse duration needed at $\overline{RST}$/NMI pin to accepted reset internally		2.2 V	2			µs

(1) The current consumption of the brownout module is already included in the I_{CC} current consumption data. The voltage level $V_{(B_IT-)}$ + $V_{hys(B_IT-)}$is ≤ 1.8 V.
(2) During power up, the CPU begins code execution following a period of $t_{d(BOR)}$ after $V_{CC} = V_{(B_IT-)} + V_{hys(B_IT-)}$. The default DCO settings must not be changed until $V_{CC} \ge V_{CC(min)}$, where $V_{CC(min)}$ is the minimum supply voltage for the desired operating frequency.

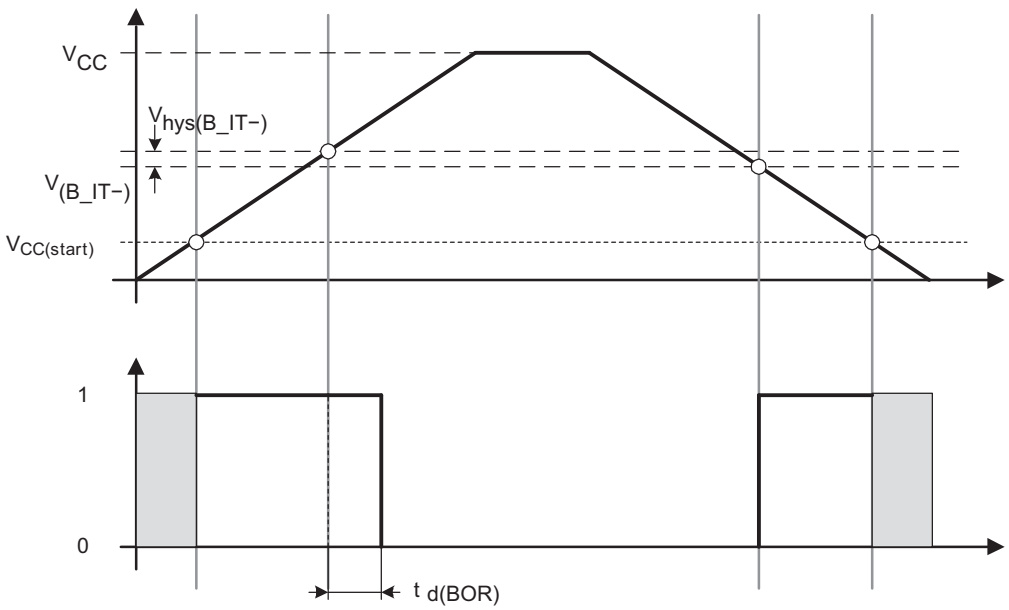

Figure 12. POR and BOR vs Supply Voltage

Typical Characteristics, POR and BOR

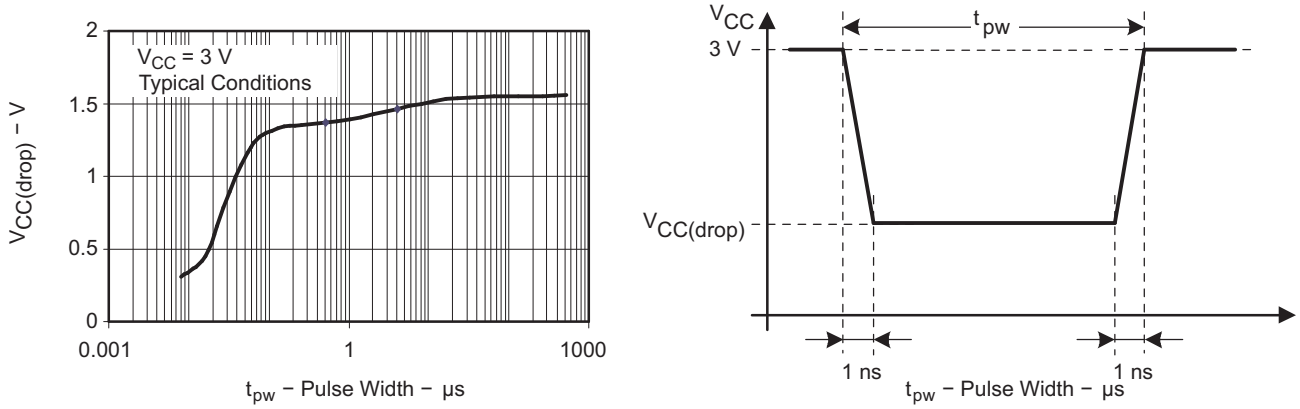

Figure 13. $V_{CC(drop)}$ Level With a Square Voltage Drop to Generate a POR or BOR Signal

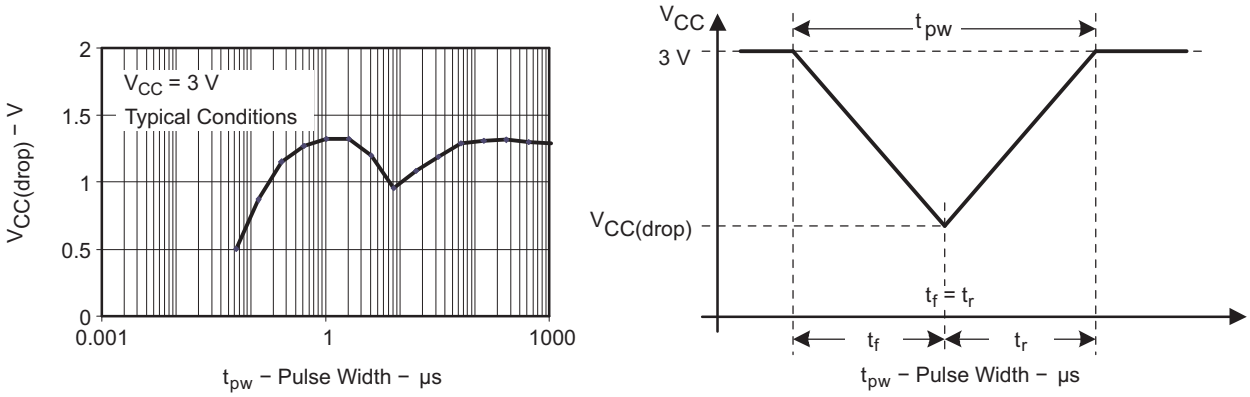

Figure 14. $V_{CC(drop)}$ Level With a Triangle Voltage Drop to Generate a POR or BOR Signal

Copyright © 2011–2013, Texas Instruments Incorporated

DCO Frequency

over recommended ranges of supply voltage and operating free-air temperature (unless otherwise noted)

PARAMETER		TEST CONDITIONS	V_{CC}	MIN	TYP	MAX	UNIT
V_{CC}	Supply voltage	RSELx < 14		1.8		3.6	V
		RSELx = 14		2.2		3.6	
		RSELx = 15		3		3.6	
$f_{DCO(0,0)}$	DCO frequency (0, 0)	RSELx = 0, DCOx = 0, MODx = 0	3 V	0.06		0.14	MHz
$f_{DCO(0,3)}$	DCO frequency (0, 3)	RSELx = 0, DCOx = 3, MODx = 0	3 V	0.07		0.17	MHz
$f_{DCO(1,3)}$	DCO frequency (1, 3)	RSELx = 1, DCOx = 3, MODx = 0	3 V		0.15		MHz
$f_{DCO(2,3)}$	DCO frequency (2, 3)	RSELx = 2, DCOx = 3, MODx = 0	3 V		0.21		MHz
$f_{DCO(3,3)}$	DCO frequency (3, 3)	RSELx = 3, DCOx = 3, MODx = 0	3 V		0.30		MHz
$f_{DCO(4,3)}$	DCO frequency (4, 3)	RSELx = 4, DCOx = 3, MODx = 0	3 V		0.41		MHz
$f_{DCO(5,3)}$	DCO frequency (5, 3)	RSELx = 5, DCOx = 3, MODx = 0	3 V		0.58		MHz
$f_{DCO(6,3)}$	DCO frequency (6, 3)	RSELx = 6, DCOx = 3, MODx = 0	3 V	0.54		1.06	MHz
$f_{DCO(7,3)}$	DCO frequency (7, 3)	RSELx = 7, DCOx = 3, MODx = 0	3 V	0.80		1.50	MHz
$f_{DCO(8,3)}$	DCO frequency (8, 3)	RSELx = 8, DCOx = 3, MODx = 0	3 V		1.6		MHz
$f_{DCO(9,3)}$	DCO frequency (9, 3)	RSELx = 9, DCOx = 3, MODx = 0	3 V		2.3		MHz
$f_{DCO(10,3)}$	DCO frequency (10, 3)	RSELx = 10, DCOx = 3, MODx = 0	3 V		3.4		MHz
$f_{DCO(11,3)}$	DCO frequency (11, 3)	RSELx = 11, DCOx = 3, MODx = 0	3 V		4.25		MHz
$f_{DCO(12,3)}$	DCO frequency (12, 3)	RSELx = 12, DCOx = 3, MODx = 0	3 V	4.30		7.30	MHz
$f_{DCO(13,3)}$	DCO frequency (13, 3)	RSELx = 13, DCOx = 3, MODx = 0	3 V	6.00	7.8	9.60	MHz
$f_{DCO(14,3)}$	DCO frequency (14, 3)	RSELx = 14, DCOx = 3, MODx = 0	3 V	8.60		13.9	MHz
$f_{DCO(15,3)}$	DCO frequency (15, 3)	RSELx = 15, DCOx = 3, MODx = 0	3 V	12.0		18.5	MHz
$f_{DCO(15,7)}$	DCO frequency (15, 7)	RSELx = 15, DCOx = 7, MODx = 0	3 V	16.0		26.0	MHz
S_{RSEL}	Frequency step between range RSEL and RSEL+1	$S_{RSEL} = f_{DCO(RSEL+1,DCO)}/f_{DCO(RSEL,DCO)}$	3 V		1.35		ratio
S_{DCO}	Frequency step between tap DCO and DCO+1	$S_{DCO} = f_{DCO(RSEL,DCO+1)}/f_{DCO(RSEL,DCO)}$	3 V		1.08		ratio
	Duty cycle	Measured at SMCLK output	3 V		50		%

Copyright © 2011–2013, Texas Instruments Incorporated

Calibrated DCO Frequencies, Tolerance

over recommended ranges of supply voltage and operating free-air temperature (unless otherwise noted)

PARAMETER	TEST CONDITIONS	T_A	V_{CC}	MIN	TYP	MAX	UNIT
1-MHz tolerance over temperature(1)	BCSCTL1 = CALBC1_1MHZ, DCOCTL = CALDCO_1MHZ, calibrated at 30°C and 3 V	0°C to 85°C	3 V	-3	±0.5	+3	%
1-MHz tolerance over V_{CC}	BCSCTL1 = CALBC1_1MHZ, DCOCTL = CALDCO_1MHZ, calibrated at 30°C and 3 V	30°C	1.8 V to 3.6 V	-3	±2	+3	%
1-MHz tolerance overall	BCSCTL1 = CALBC1_1MHZ, DCOCTL = CALDCO_1MHZ, calibrated at 30°C and 3 V	-40°C to 85°C	1.8 V to 3.6 V	-6	±3	+6	%
8-MHz tolerance over temperature(1)	BCSCTL1 = CALBC1_8MHZ, DCOCTL = CALDCO_8MHZ, calibrated at 30°C and 3 V	0°C to 85°C	3 V	-3	±0.5	+3	%
8-MHz tolerance over V_{CC}	BCSCTL1 = CALBC1_8MHZ, DCOCTL = CALDCO_8MHZ, calibrated at 30°C and 3 V	30°C	2.2 V to 3.6 V	-3	±2	+3	%
8-MHz tolerance overall	BCSCTL1 = CALBC1_8MHZ, DCOCTL = CALDCO_8MHZ, calibrated at 30°C and 3 V	-40°C to 85°C	2.2 V to 3.6 V	-6	±3	+6	%
12-MHz tolerance over temperature(1)	BCSCTL1 = CALBC1_12MHZ, DCOCTL = CALDCO_12MHZ, calibrated at 30°C and 3 V	0°C to 85°C	3 V	-3	±0.5	+3	%
12-MHz tolerance over V_{CC}	BCSCTL1 = CALBC1_12MHZ, DCOCTL = CALDCO_12MHZ, calibrated at 30°C and 3 V	30°C	2.7 V to 3.6 V	-3	±2	+3	%
12-MHz tolerance overall	BCSCTL1 = CALBC1_12MHZ, DCOCTL = CALDCO_12MHZ, calibrated at 30°C and 3 V	-40°C to 85°C	2.7 V to 3.6 V	-6	±3	+6	%
16-MHz tolerance over temperature(1)	BCSCTL1 = CALBC1_16MHZ, DCOCTL = CALDCO_16MHZ, calibrated at 30°C and 3 V	0°C to 85°C	3 V	-3	±0.5	+3	%
16-MHz tolerance over V_{CC}	BCSCTL1 = CALBC1_16MHZ, DCOCTL = CALDCO_16MHZ, calibrated at 30°C and 3 V	30°C	3.3 V to 3.6 V	-3	±2	+3	%
16-MHz tolerance overall	BCSCTL1 = CALBC1_16MHZ, DCOCTL = CALDCO_16MHZ, calibrated at 30°C and 3 V	-40°C to 85°C	3.3 V to 3.6 V	-6	±3	+6	%

(1) This is the frequency change from the measured frequency at 30°C over temperature.

Copyright © 2011–2013, Texas Instruments Incorporated

Wake-Up From Lower-Power Modes (LPM3/4)

over recommended ranges of supply voltage and operating free-air temperature (unless otherwise noted)

PARAMETER		TEST CONDITIONS	V_{CC}	MIN	TYP	MAX	UNIT
$t_{DCO,LPM3/4}$	DCO clock wake-up time from LPM3/4 (1)	BCSCTL1 = CALBC1_1MHz, DCOCTL = CALDCO_1MHz	3 V		1.5		µs
$t_{CPU,LPM3/4}$	CPU wake-up time from LPM3/4 (2)				$1/f_{MCLK}$ + $t_{Clock,LPM3/4}$		

(1) The DCO clock wake-up time is measured from the edge of an external wake-up signal (e.g., port interrupt) to the first clock edge observable externally on a clock pin (MCLK or SMCLK).
(2) Parameter applicable only if DCOCLK is used for MCLK.

Typical Characteristics, DCO Clock Wake-Up Time From LPM3/4

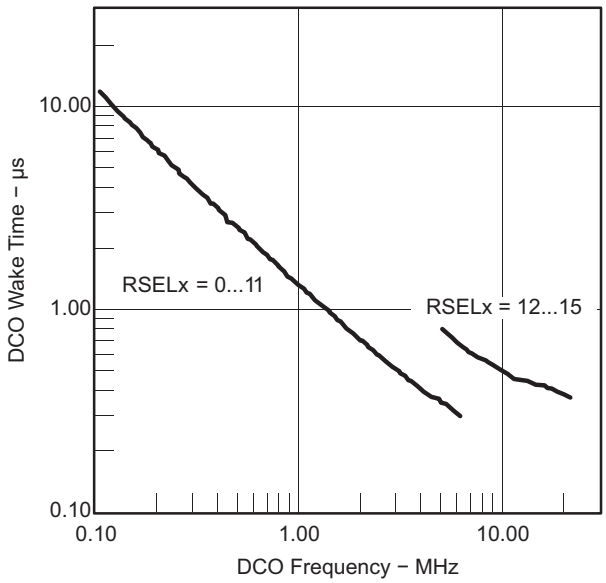

Figure 15. DCO Wake-Up Time From LPM3 vs DCO Frequency

Crystal Oscillator, XT1, Low-Frequency Mode[1]

over recommended ranges of supply voltage and operating free-air temperature (unless otherwise noted)

PARAMETER		TEST CONDITIONS	V_{CC}	MIN	TYP	MAX	UNIT
$f_{LFXT1,LF}$	LFXT1 oscillator crystal frequency, LF mode 0, 1	XTS = 0, LFXT1Sx = 0 or 1	1.8 V to 3.6 V		32768		Hz
$f_{LFXT1,LF,logic}$	LFXT1 oscillator logic level square wave input frequency, LF mode	XTS = 0, XCAPx = 0, LFXT1Sx = 3	1.8 V to 3.6 V	10000	32768	50000	Hz
OA_{LF}	Oscillation allowance for LF crystals	XTS = 0, LFXT1Sx = 0, $f_{LFXT1,LF}$ = 32768 Hz, $C_{L,eff}$ = 6 pF			500		kΩ
		XTS = 0, LFXT1Sx = 0, $f_{LFXT1,LF}$ = 32768 Hz, $C_{L,eff}$ = 12 pF			200		
$C_{L,eff}$	Integrated effective load capacitance, LF mode[2]	XTS = 0, XCAPx = 0			1		pF
		XTS = 0, XCAPx = 1			5.5		
		XTS = 0, XCAPx = 2			8.5		
		XTS = 0, XCAPx = 3			11		
	Duty cycle, LF mode	XTS = 0, Measured at P2.0/ACLK, $f_{LFXT1,LF}$ = 32768 Hz	2.2 V	30	50	70	%
$f_{Fault,LF}$	Oscillator fault frequency, LF mode[3]	XTS = 0, XCAPx = 0, LFXT1Sx = 3[4]	2.2 V	10		10000	Hz

(1) To improve EMI on the XT1 oscillator, the following guidelines should be observed.
(a) Keep the trace between the device and the crystal as short as possible.
(b) Design a good ground plane around the oscillator pins.
(c) Prevent crosstalk from other clock or data lines into oscillator pins XIN and XOUT.
(d) Avoid running PCB traces underneath or adjacent to the XIN and XOUT pins.
(e) Use assembly materials and process that avoid any parasitic load on the oscillator XIN and XOUT pins.
(f) If a conformal coating is used, ensure that it does not induce capacitive or resistive leakage between the oscillator pins.
(g) Do not route the XOUT line to the JTAG header to support the serial programming adapter as shown in other documentation. This signal is no longer required for the serial programming adapter.
(2) Includes parasitic bond and package capacitance (approximately 2 pF per pin).
Because the PCB adds additional capacitance, it is recommended to verify the correct load by measuring the ACLK frequency. For a correct setup, the effective load capacitance should always match the specification of the used crystal.
(3) Frequencies below the MIN specification set the fault flag. Frequencies above the MAX specification do not set the fault flag. Frequencies in between might set the flag.
(4) Measured with logic-level input frequency but also applies to operation with crystals.

Internal Very-Low-Power Low-Frequency Oscillator (VLO)

over recommended ranges of supply voltage and operating free-air temperature (unless otherwise noted)

PARAMETER		T_A	V_{CC}	MIN	TYP	MAX	UNIT
f_{VLO}	VLO frequency	-40°C to 85°C	3 V	4	12	20	kHz
df_{VLO}/d_T	VLO frequency temperature drift	-40°C to 85°C	3 V		0.5		%/°C
df_{VLO}/dV_{CC}	VLO frequency supply voltage drift	25°C	1.8 V to 3.6 V		4		%/V

Timer_A

over recommended ranges of supply voltage and operating free-air temperature (unless otherwise noted)

PARAMETER		TEST CONDITIONS	V_{CC}	MIN	TYP	MAX	UNIT
f_{TA}	Timer_A input clock frequency	SMCLK, duty cycle = 50% ± 10%			f_{SYSTEM}		MHz
$t_{TA,cap}$	Timer_A capture timing	TA0, TA1	3 V	20			ns

Copyright © 2011–2013, Texas Instruments Incorporated

USCI (UART Mode)

over recommended ranges of supply voltage and operating free-air temperature (unless otherwise noted)

PARAMETER		TEST CONDITIONS	V_{CC}	MIN	TYP	MAX	UNIT
f_{USCI}	USCI input clock frequency	SMCLK, duty cycle = 50% ± 10%			f_{SYSTEM}		MHz
$f_{max,BITCLK}$	Maximum BITCLK clock frequency (equals baudrate in MBaud)(1)		3 V	2			MHz
t_T	UART receive deglitch time(2)		3 V	50	100	600	ns

(1) The DCO wake-up time must be considered in LPM3 and LPM4 for baud rates above 1 MHz.
(2) Pulses on the UART receive input (UCxRX) shorter than the UART receive deglitch time are suppressed. To ensure that pulses are correctly recognized, their duration should exceed the maximum specification of the deglitch time.

USCI (SPI Master Mode)

over recommended ranges of supply voltage and operating free-air temperature (unless otherwise noted) (see Figure 16 and Figure 17)

PARAMETER		TEST CONDITIONS	V_{CC}	MIN	TYP	MAX	UNIT
f_{USCI}	USCI input clock frequency	SMCLK, duty cycle = 50% ± 10%				f_{SYSTEM}	MHz
$t_{SU,MI}$	SOMI input data setup time		3 V	75			ns
$t_{HD,MI}$	SOMI input data hold time		3 V	0			ns
$t_{VALID,MO}$	SIMO output data valid time	UCLK edge to SIMO valid, C_L = 20 pF	3 V			20	ns

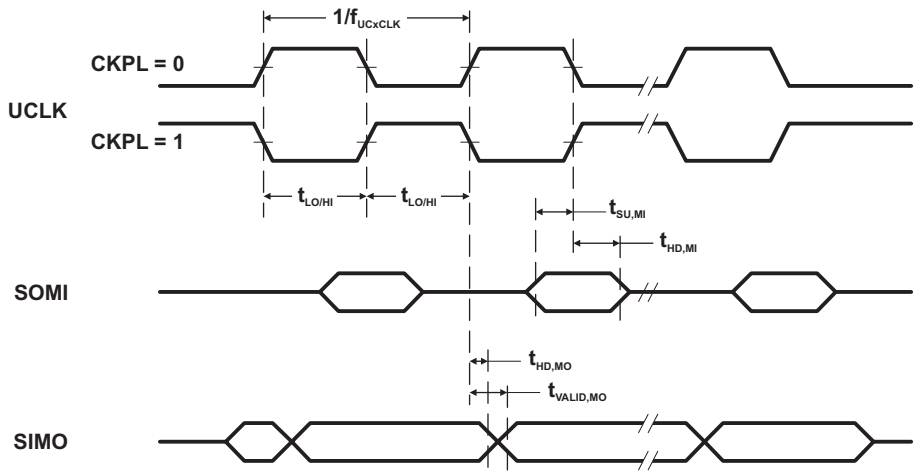

Figure 16. SPI Master Mode, CKPH = 0

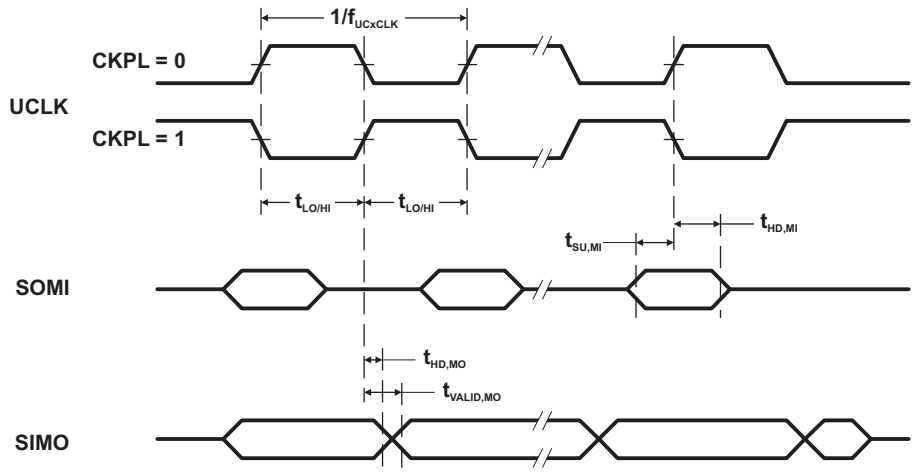

Figure 17. SPI Master Mode, CKPH = 1

USCI (SPI Slave Mode)

over recommended ranges of supply voltage and operating free-air temperature (unless otherwise noted) (see Figure 18 and Figure 19)

PARAMETER		TEST CONDITIONS	V_{CC}	MIN	TYP	MAX	UNIT
$t_{STE,LEAD}$	STE lead time, STE low to clock		3 V		50		ns
$t_{STE,LAG}$	STE lag time, Last clock to STE high		3 V	10			ns
$t_{STE,ACC}$	STE access time, STE low to SOMI data out		3 V		50		ns
$t_{STE,DIS}$	STE disable time, STE high to SOMI high impedance		3 V		50		ns
$t_{SU,SI}$	SIMO input data setup time		3 V	15			ns
$t_{HD,SI}$	SIMO input data hold time		3 V	10			ns
$t_{VALID,SO}$	SOMI output data valid time	UCLK edge to SOMI valid, C_L = 20 pF	3 V		50	75	ns

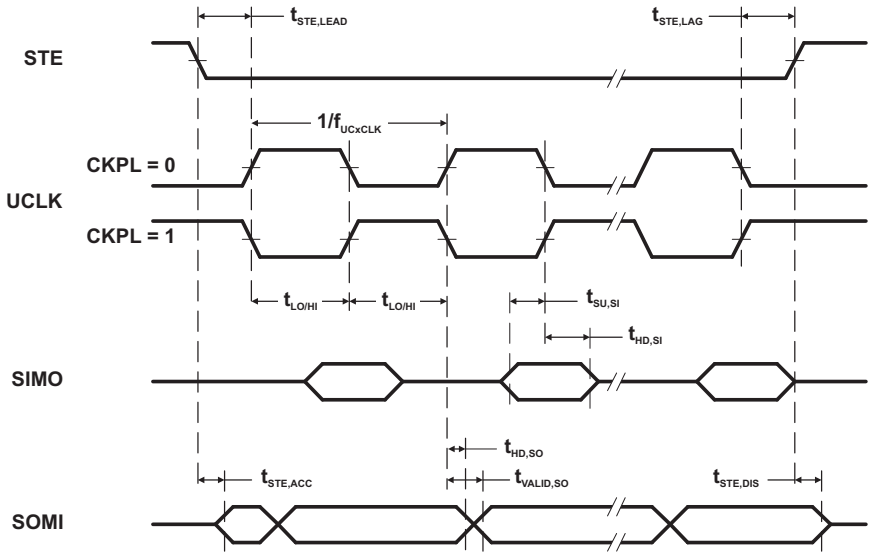

Figure 18. SPI Slave Mode, CKPH = 0

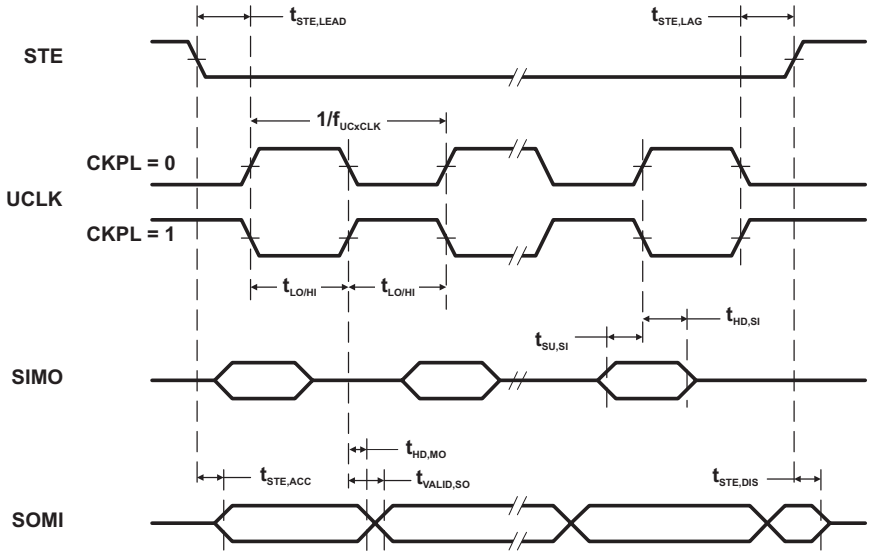

Figure 19. SPI Slave Mode, CKPH = 1

Copyright © 2011–2013, Texas Instruments Incorporated

USCI (I2C Mode)

over recommended ranges of supply voltage and operating free-air temperature (unless otherwise noted) (see Figure 20)

PARAMETER		TEST CONDITIONS	V_{CC}	MIN	TYP	MAX	UNIT
f_{USCI}	USCI input clock frequency	SMCLK, duty cycle = 50% ± 10%				f_{SYSTEM}	MHz
f_{SCL}	SCL clock frequency		3 V	0		400	kHz
$t_{HD,STA}$	Hold time (repeated) START	f_{SCL} ≤ 100 kHz	3 V	4.0			µs
		f_{SCL} > 100 kHz		0.6			
$t_{SU,STA}$	Setup time for a repeated START	f_{SCL} ≤ 100 kHz	3 V	4.7			µs
		f_{SCL} > 100 kHz		0.6			
$t_{HD,DAT}$	Data hold time		3 V	0			ns
$t_{SU,DAT}$	Data setup time		3 V	250			ns
$t_{SU,STO}$	Setup time for STOP		3 V	4.0			µs
t_{SP}	Pulse width of spikes suppressed by input filter		3 V	50	100	600	ns

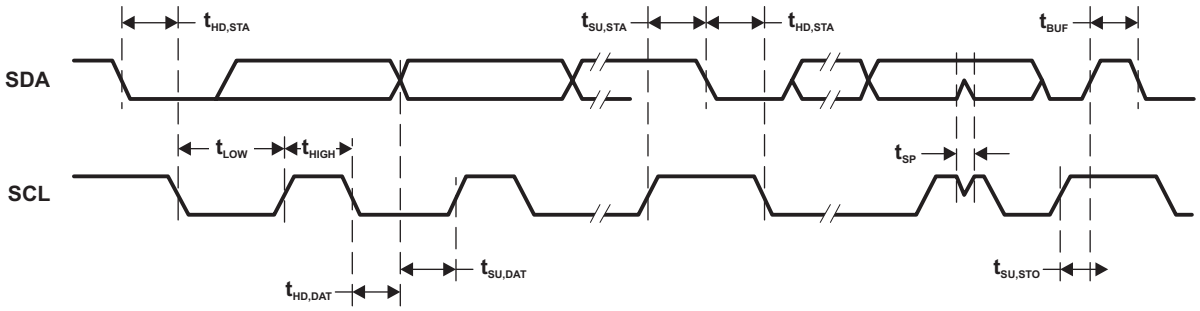

Figure 20. I2C Mode Timing

Comparator_A+

over recommended ranges of supply voltage and operating free-air temperature (unless otherwise noted)

PARAMETER		TEST CONDITIONS	V_{CC}	MIN	TYP	MAX	UNIT
$I_{(DD)}$ (1)		CAON = 1, CARSEL = 0, CAREF = 0	3 V		45		µA
$I_{(Refladder/RefDiode)}$		CAON = 1, CARSEL = 0, CAREF = 1, 2, or 3, No load at CA0 and CA1	3 V		45		µA
$V_{(IC)}$	Common–mode input voltage	CAON = 1	3 V	0		V_{CC}-1	V
$V_{(Ref025)}$	(Voltage at 0.25 V_{CC} node) / V_{CC}	PCA0 = 1, CARSEL = 1, CAREF = 1, No load at CA0 and CA1	3 V		0.24		
$V_{(Ref050)}$	(Voltage at 0.5 V_{CC} node) / V_{CC}	PCA0 = 1, CARSEL = 1, CAREF = 2, No load at CA0 and CA1	3 V		0.48		
$V_{(RefVT)}$	See Figure 21 and Figure 22	PCA0 = 1, CARSEL = 1, CAREF = 3, No load at CA0 and CA1, TA = 85°C	3 V		490		mV
$V_{(offset)}$	Offset voltage (2)		3 V		±10		mV
V_{hys}	Input hysteresis	CAON = 1	3 V		0.7		mV
$t_{(response)}$	Response time (low-high and high-low)	T_A = 25°C, Overdrive 10 mV, Without filter: CAF = 0	3 V		120		ns
		T_A = 25°C, Overdrive 10 mV, With filter: CAF = 1			1.5		µs

(1) The leakage current for the Comparator_A+ terminals is identical to $I_{lkg(Px.y)}$ specification.
(2) The input offset voltage can be cancelled by using the CAEX bit to invert the Comparator_A+ inputs on successive measurements. The two successive measurements are then summed together.

Copyright © 2011–2013, Texas Instruments Incorporated

Typical Characteristics – Comparator_A+

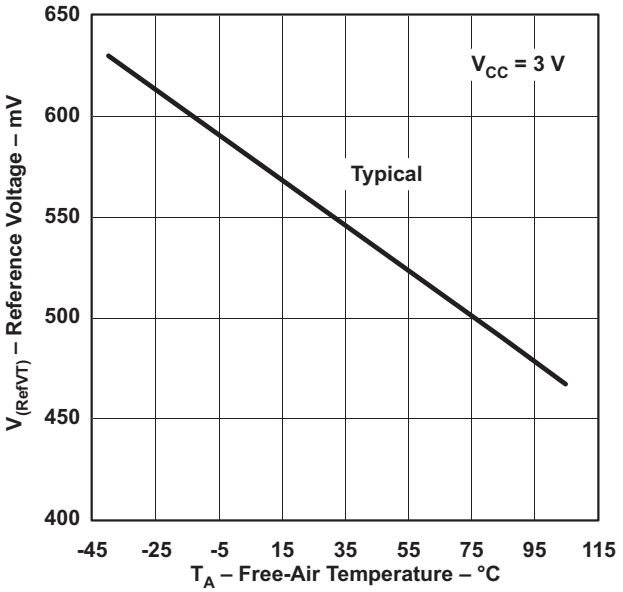

Figure 21. $V_{(RefVT)}$ vs Temperature, V_{CC} = 3 V

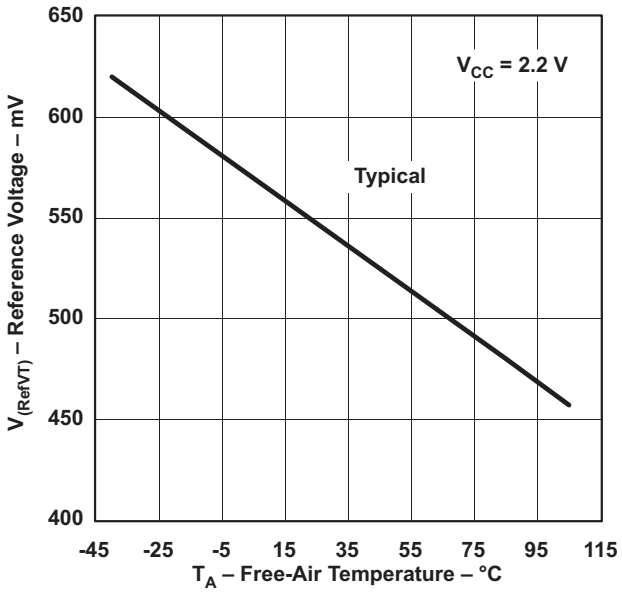

Figure 22. $V_{(RefVT)}$ vs Temperature, V_{CC} = 2.2 V

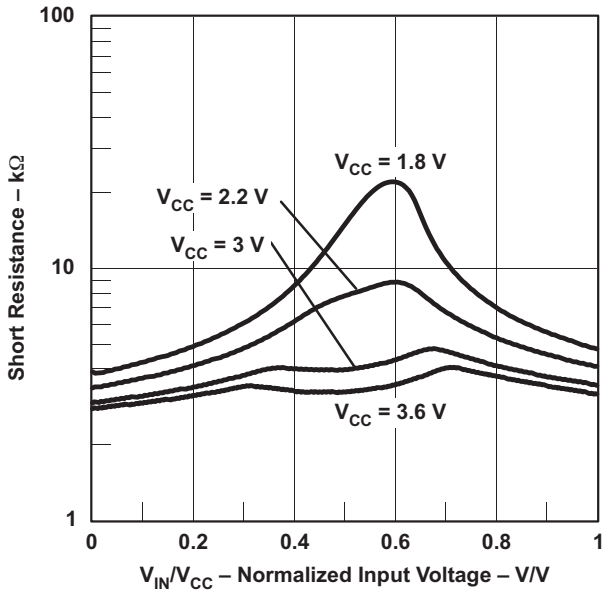

Figure 23. Short Resistance vs V_{IN}/V_{CC}

Copyright © 2011–2013, Texas Instruments Incorporated

10-Bit ADC, Power Supply and Input Range Conditions (MSP430G2x53 Only)

over recommended ranges of supply voltage and operating free-air temperature (unless otherwise noted)[1]

PARAMETER		TEST CONDITIONS	T_A	V_{CC}	MIN	TYP	MAX	UNIT
V_{CC}	Analog supply voltage	V_{SS} = 0 V			2.2		3.6	V
V_{Ax}	Analog input voltage[2]	All Ax terminals, Analog inputs selected in ADC10AE register		3 V	0		V_{CC}	V
I_{ADC10}	ADC10 supply current[3]	$f_{ADC10CLK}$ = 5.0 MHz, ADC10ON = 1, REFON = 0, ADC10SHT0 = 1, ADC10SHT1 = 0, ADC10DIV = 0	25°C	3 V		0.6		mA
I_{REF+}	Reference supply current, reference buffer disabled[4]	$f_{ADC10CLK}$ = 5.0 MHz, ADC10ON = 0, REF2_5V = 0, REFON = 1, REFOUT = 0	25°C	3 V		0.25		mA
		$f_{ADC10CLK}$ = 5.0 MHz, ADC10ON = 0, REF2_5V = 1, REFON = 1, REFOUT = 0				0.25		
$I_{REFB,0}$	Reference buffer supply current with ADC10SR = 0[4]	$f_{ADC10CLK}$ = 5.0 MHz, ADC10ON = 0, REFON = 1, REF2_5V = 0, REFOUT = 1, ADC10SR = 0	25°C	3 V		1.1		mA
$I_{REFB,1}$	Reference buffer supply current with ADC10SR = 1[4]	$f_{ADC10CLK}$ = 5.0 MHz, ADC10ON = 0, REFON = 1, REF2_5V = 0, REFOUT = 1, ADC10SR = 1	25°C	3 V		0.5		mA
C_I	Input capacitance	Only one terminal Ax can be selected at one time	25°C	3 V			27	pF
R_I	Input MUX ON resistance	0 V ≤ V_{Ax} ≤ V_{CC}	25°C	3 V		1000		Ω

(1) The leakage current is defined in the leakage current table with Px.y/Ax parameter.
(2) The analog input voltage range must be within the selected reference voltage range V_{R+} to V_{R-} for valid conversion results.
(3) The internal reference supply current is not included in current consumption parameter I_{ADC10}.
(4) The internal reference current is supplied via terminal V_{CC}. Consumption is independent of the ADC10ON control bit, unless a conversion is active. The REFON bit enables the built-in reference to settle before starting an A/D conversion.

Copyright © 2011–2013, Texas Instruments Incorporated

10-Bit ADC, Built-In Voltage Reference (MSP430G2x53 Only)

over recommended ranges of supply voltage and operating free-air temperature (unless otherwise noted)

PARAMETER		TEST CONDITIONS	V_{CC}	MIN	TYP	MAX	UNIT
$V_{CC,REF+}$	Positive built-in reference analog supply voltage range	I_{VREF+} ≤ 1 mA, REF2_5V = 0		2.2			V
		I_{VREF+} ≤ 1 mA, REF2_5V = 1		2.9			
V_{REF+}	Positive built-in reference voltage	I_{VREF+} ≤ I_{VREF+}max, REF2_5V = 0	3 V	1.41	1.5	1.59	V
		I_{VREF+} ≤ I_{VREF+}max, REF2_5V = 1		2.35	2.5	2.65	
$I_{LD,VREF+}$	Maximum VREF+ load current		3 V			±1	mA
	VREF+ load regulation	I_{VREF+} = 500 µA ± 100 µA, Analog input voltage V_{Ax} ≯ 0.75 V, REF2_5V = 0	3 V			±2	LSB
		I_{VREF+} = 500 µA ± 100 µA, Analog input voltage V_{Ax} ≯ 1.25 V, REF2_5V = 1				±2	
	V_{REF+} load regulation response time	I_{VREF+} = 100 µA→900 µA, V_{Ax} ≯ 0.5 × VREF+, Error of conversion result ≤ 1 LSB, ADC10SR = 0	3 V			400	ns
C_{VREF+}	Maximum capacitance at pin VREF+	I_{VREF+} ≤ ±1 mA, REFON = 1, REFOUT = 1	3 V			100	pF
TC_{REF+}	Temperature coefficient (1)	I_{VREF+} = const with 0 mA ≤ I_{VREF+} ≤ 1 mA	3 V			±100	ppm/°C
t_{REFON}	Settling time of internal reference voltage to 99.9% VREF	I_{VREF+} = 0.5 mA, REF2_5V = 0, REFON = 0 → 1	3.6 V			30	µs
$t_{REFBURST}$	Settling time of reference buffer to 99.9% VREF	I_{VREF+} = 0.5 mA, REF2_5V = 1, REFON = 1, REFBURST = 1, ADC10SR = 0	3 V			2	µs

(1) Calculated using the box method: (MAX(-40 to 85°C) – MIN(-40 to 85°C)) / MIN(-40 to 85°C) / (85°C – (–40°C))

Copyright © 2011–2013, Texas Instruments Incorporated

10-Bit ADC, External Reference[1] (MSP430G2x53 Only)

over recommended ranges of supply voltage and operating free-air temperature (unless otherwise noted)

PARAMETER		TEST CONDITIONS	V_{CC}	MIN	TYP	MAX	UNIT
VEREF+	Positive external reference input voltage range [2]	VEREF+ > VEREF–, SREF1 = 1, SREF0 = 0		1.4		V_{CC}	V
		VEREF– ≤ VEREF+ ≤ V_{CC} – 0.15 V, SREF1 = 1, SREF0 = 1 [3]		1.4		3	
VEREF–	Negative external reference input voltage range [4]	VEREF+ > VEREF–		0		1.2	V
ΔVEREF	Differential external reference input voltage range, ΔVEREF = VEREF+ – VEREF–	VEREF+ > VEREF– [5]		1.4		V_{CC}	V
I_{VEREF+}	Static input current into VEREF+	0 V ≤ VEREF+ ≤ V_{CC}, SREF1 = 1, SREF0 = 0	3 V		±1		µA
		0 V ≤ VEREF+ ≤ V_{CC} – 0.15 V ≤ 3 V, SREF1 = 1, SREF0 = 1 [3]	3 V		0		
$I_{VEREF–}$	Static input current into VEREF–	0 V ≤ VEREF– ≤ V_{CC}	3 V		±1		µA

(1) The external reference is used during conversion to charge and discharge the capacitance array. The input capacitance, C_I, is also the dynamic load for an external reference during conversion. The dynamic impedance of the reference supply should follow the recommendations on analog-source impedance to allow the charge to settle for 10-bit accuracy.
(2) The accuracy limits the minimum positive external reference voltage. Lower reference voltage levels may be applied with reduced accuracy requirements.
(3) Under this condition the external reference is internally buffered. The reference buffer is active and requires the reference buffer supply current I_{REFB}. The current consumption can be limited to the sample and conversion period with REBURST = 1.
(4) The accuracy limits the maximum negative external reference voltage. Higher reference voltage levels may be applied with reduced accuracy requirements.
(5) The accuracy limits the minimum external differential reference voltage. Lower differential reference voltage levels may be applied with reduced accuracy requirements.

10-Bit ADC, Timing Parameters (MSP430G2x53 Only)

over recommended ranges of supply voltage and operating free-air temperature (unless otherwise noted)

PARAMETER		TEST CONDITIONS		V_{CC}	MIN	TYP	MAX	UNIT
$f_{ADC10CLK}$	ADC10 input clock frequency	For specified performance of ADC10 linearity parameters	ADC10SR = 0	3 V	0.45		6.3	MHz
			ADC10SR = 1		0.45		1.5	
$f_{ADC10OSC}$	ADC10 built-in oscillator frequency	ADC10DIVx = 0, ADC10SSELx = 0, $f_{ADC10CLK}$ = $f_{ADC10OSC}$		3 V	3.7		6.3	MHz
$t_{CONVERT}$	Conversion time	ADC10 built-in oscillator, ADC10SSELx = 0, $f_{ADC10CLK}$ = $f_{ADC10OSC}$		3 V	2.06		3.51	µs
		$f_{ADC10CLK}$ from ACLK, MCLK, or SMCLK: ADC10SSELx ≠ 0			13 × ADC10DIV × 1/$f_{ADC10CLK}$			
$t_{ADC10ON}$	Turn-on settling time of the ADC	[1]					100	ns

(1) The condition is that the error in a conversion started after $t_{ADC10ON}$ is less than ±0.5 LSB. The reference and input signal are already settled.

10-Bit ADC, Linearity Parameters (MSP430G2x53 Only)

over recommended ranges of supply voltage and operating free-air temperature (unless otherwise noted)

PARAMETER		TEST CONDITIONS	V_{CC}	MIN	TYP	MAX	UNIT
E_I	Integral linearity error		3 V			±1	LSB
E_D	Differential linearity error		3 V			±1	LSB
E_O	Offset error	Source impedance R_S < 100 Ω	3 V			±1	LSB
E_G	Gain error		3 V		±1.1	±2	LSB
E_T	Total unadjusted error		3 V		±2	±5	LSB

Copyright © 2011–2013, Texas Instruments Incorporated

10-Bit ADC, Temperature Sensor and Built-In V_{MID} (MSP430G2x53 Only)

over recommended ranges of supply voltage and operating free-air temperature (unless otherwise noted)

PARAMETER		TEST CONDITIONS	V_{CC}	MIN	TYP	MAX	UNIT
I_{SENSOR}	Temperature sensor supply current (1)	REFON = 0, INCHx = 0Ah, T_A = 25°C	3 V		60		µA
TC_{SENSOR}		ADC10ON = 1, INCHx = 0Ah (2)	3 V		3.55		mV/°C
$t_{Sensor(sample)}$	Sample time required if channel 10 is selected (3)	ADC10ON = 1, INCHx = 0Ah, Error of conversion result ≤ 1 LSB	3 V	30			µs
I_{VMID}	Current into divider at channel 11	ADC10ON = 1, INCHx = 0Bh	3 V			(4)	µA
V_{MID}	V_{CC} divider at channel 11	ADC10ON = 1, INCHx = 0Bh, $V_{MID} \neq 0.5 \times V_{CC}$	3 V		1.5		V
$t_{VMID(sample)}$	Sample time required if channel 11 is selected (5)	ADC10ON = 1, INCHx = 0Bh, Error of conversion result ≤ 1 LSB	3 V	1220			ns

(1) The sensor current I_{SENSOR} is consumed if (ADC10ON = 1 and REFON = 1) or (ADC10ON = 1 and INCH = 0Ah and sample signal is high). When REFON = 1, I_{SENSOR} is included in I_{REF+}. When REFON = 0, I_{SENSOR} applies during conversion of the temperature sensor input (INCH = 0Ah).
(2) The following formula can be used to calculate the temperature sensor output voltage:
$V_{Sensor,typ} = TC_{Sensor}$ (273 + T [°C]) + $V_{Offset,sensor}$ [mV] or
$V_{Sensor,typ} = TC_{Sensor}$ T [°C] + $V_{Sensor}(T_A = 0°C)$ [mV]
(3) The typical equivalent impedance of the sensor is 51 kΩ. The sample time required includes the sensor-on time $t_{SENSOR(on)}$.
(4) No additional current is needed. The V_{MID} is used during sampling.
(5) The on-time $t_{VMID(on)}$ is included in the sampling time $t_{VMID(sample)}$; no additional on time is needed.

Flash Memory

over recommended ranges of supply voltage and operating free-air temperature (unless otherwise noted)

PARAMETER		TEST CONDITIONS	V_{CC}	MIN	TYP	MAX	UNIT
$V_{CC(PGM/ERASE)}$	Program and erase supply voltage			2.2		3.6	V
f_{FTG}	Flash timing generator frequency			257		476	kHz
I_{PGM}	Supply current from V_{CC} during program		2.2 V, 3.6 V		1	5	mA
I_{ERASE}	Supply current from V_{CC} during erase		2.2 V, 3.6 V		1	7	mA
t_{CPT}	Cumulative program time (1)		2.2 V, 3.6 V			10	ms
$t_{CMErase}$	Cumulative mass erase time		2.2 V, 3.6 V	20			ms
	Program/erase endurance			10^4	10^5		cycles
$t_{Retention}$	Data retention duration	T_J = 25°C		100			years
t_{Word}	Word or byte program time	(2)			30		t_{FTG}
$t_{Block, 0}$	Block program time for first byte or word	(2)			25		t_{FTG}
$t_{Block, 1-63}$	Block program time for each additional byte or word	(2)			18		t_{FTG}
$t_{Block, End}$	Block program end-sequence wait time	(2)			6		t_{FTG}
$t_{Mass\ Erase}$	Mass erase time	(2)			10593		t_{FTG}
$t_{Seg\ Erase}$	Segment erase time	(2)			4819		t_{FTG}

(1) The cumulative program time must not be exceeded when writing to a 64-byte flash block. This parameter applies to all programming methods: individual word/byte write and block write modes.
(2) These values are hardwired into the Flash Controller's state machine ($t_{FTG} = 1/f_{FTG}$).

Copyright © 2011–2013, Texas Instruments Incorporated

RAM

over recommended ranges of supply voltage and operating free-air temperature (unless otherwise noted)

PARAMETER		TEST CONDITIONS	MIN	MAX	UNIT
$V_{(RAMh)}$	RAM retention supply voltage [1]	CPU halted	1.6		V

(1) This parameter defines the minimum supply voltage V_{CC} when the data in RAM remains unchanged. No program execution should happen during this supply voltage condition.

JTAG and Spy-Bi-Wire Interface

over recommended ranges of supply voltage and operating free-air temperature (unless otherwise noted)

PARAMETER		TEST CONDITIONS	V_{CC}	MIN	TYP	MAX	UNIT
f_{SBW}	Spy-Bi-Wire input frequency		2.2 V	0		20	MHz
$t_{SBW,Low}$	Spy-Bi-Wire low clock pulse duration		2.2 V	0.025		15	µs
$t_{SBW,En}$	Spy-Bi-Wire enable time (TEST high to acceptance of first clock edge[1])		2.2 V			1	µs
$t_{SBW,Ret}$	Spy-Bi-Wire return to normal operation time		2.2 V	15		100	µs
f_{TCK}	TCK input frequency[2]		2.2 V	0		5	MHz
$R_{Internal}$	Internal pulldown resistance on TEST		2.2 V	25	60	90	kΩ

(1) Tools accessing the Spy-Bi-Wire interface need to wait for the maximum $t_{SBW,En}$ time after pulling the TEST/SBWTCK pin high before applying the first SBWTCK clock edge.
(2) f_{TCK} may be restricted to meet the timing requirements of the module selected.

JTAG Fuse[1]

over recommended ranges of supply voltage and operating free-air temperature (unless otherwise noted)

PARAMETER		TEST CONDITIONS	MIN	MAX	UNIT
$V_{CC(FB)}$	Supply voltage during fuse-blow condition	T_A = 25°C	2.5		V
V_{FB}	Voltage level on TEST for fuse blow		6	7	V
I_{FB}	Supply current into TEST during fuse blow			100	mA
t_{FB}	Time to blow fuse			1	ms

(1) Once the fuse is blown, no further access to the JTAG/Test, Spy-Bi-Wire, and emulation feature is possible, and JTAG is switched to bypass mode.

Copyright © 2011–2013, Texas Instruments Incorporated

PORT SCHEMATICS

Port P1 Pin Schematic: P1.0 to P1.2, Input/Output With Schmitt Trigger

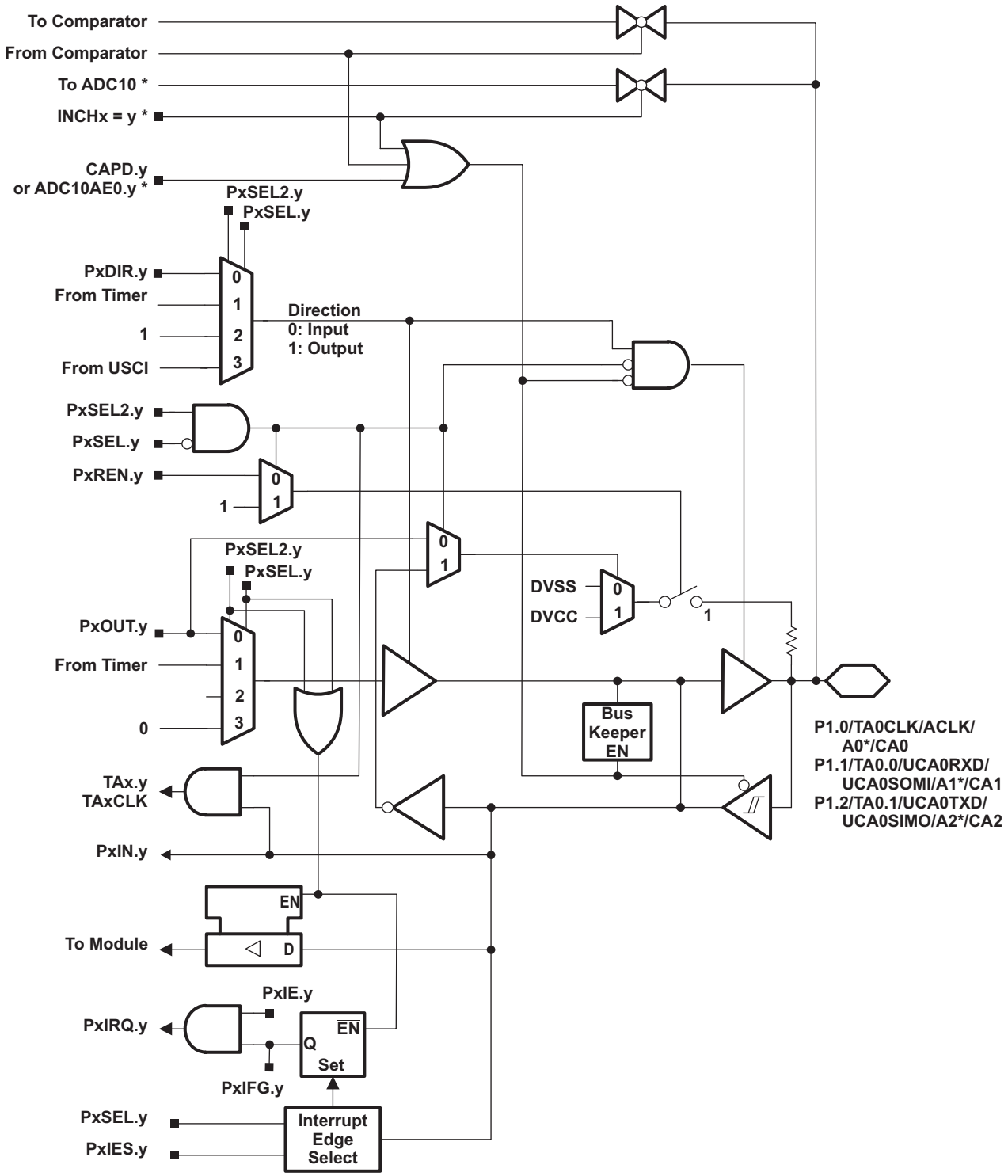

*** Note: MSP430G2x53 devices only. MSP430G2x13 devices have no ADC10.**

Copyright © 2011–2013, Texas Instruments Incorporated

Table 16. Port P1 (P1.0 to P1.2) Pin Functions

PIN NAME (P1.x)	x	FUNCTION	CONTROL BITS AND SIGNALS (1)				
			P1DIR.x	P1SEL.x	P1SEL2.x	ADC10AE.x INCH.x=1 (2)	CAPD.y
P1.0/	0	P1.x (I/O)	I: 0; O: 1	0	0	0	0
TA0CLK/		TA0.TACLK	0	1	0	0	0
ACLK/		ACLK	1	1	0	0	0
A0 (2)/		A0	X	X	X	1 (y = 0)	0
CA0/		CA0	X	X	X	0	1 (y = 0)
Pin Osc		Capacitive sensing	X	0	1	0	0
P1.1/	1	P1.x (I/O)	I: 0; O: 1	0	0	0	0
TA0.0/		TA0.0	1	1	0	0	0
		TA0.CCI0A	0	1	0	0	0
UCA0RXD/		UCA0RXD	from USCI	1	1	0	0
UCA0SOMI/		UCA0SOMI	from USCI	1	1	0	0
A1 (2)/		A1	X	X	X	1 (y = 1)	0
CA1/		CA1	X	X	X	0	1 (y = 1)
Pin Osc		Capacitive sensing	X	0	1	0	0
P1.2/	2	P1.x (I/O)	I: 0; O: 1	0	0	0	0
TA0.1/		TA0.1	1	1	0	0	0
		TA0.CCI1A	0	1	0	0	0
UCA0TXD/		UCA0TXD	from USCI	1	1	0	0
UCA0SIMO/		UCA0SIMO	from USCI	1	1	0	0
A2 (2)/		A2	X	X	X	1 (y = 2)	0
CA2/		CA2	X	X	X	0	1 (y = 2)
Pin Osc		Capacitive sensing	X	0	1	0	0

(1) X = don't care
(2) MSP430G2x53 devices only

Port P1 Pin Schematic: P1.3, Input/Output With Schmitt Trigger

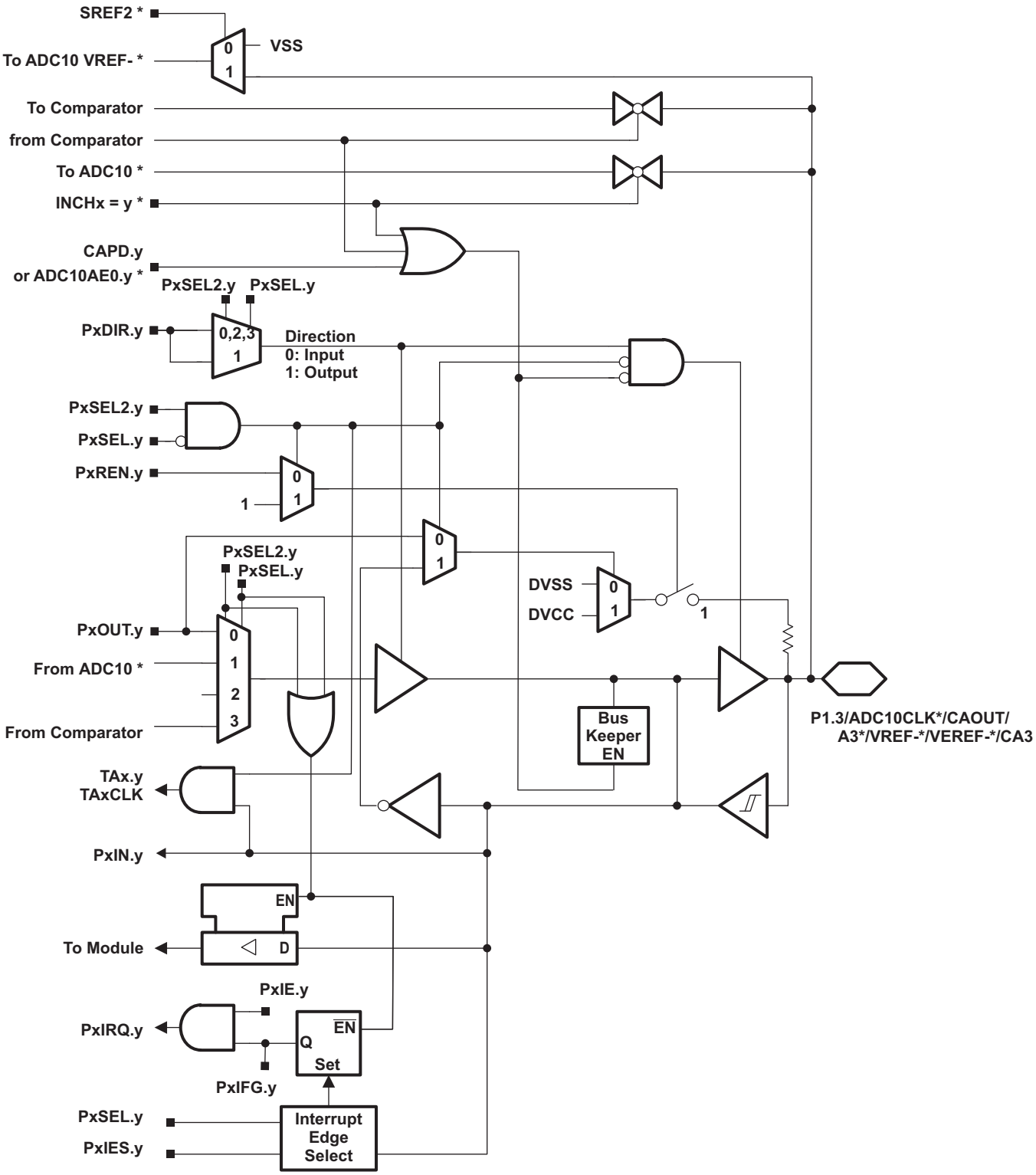

*** Note: MSP430G2x53 devices only. MSP430G2x13 devices have no ADC10.**

Copyright © 2011–2013, Texas Instruments Incorporated

Table 17. Port P1 (P1.3) Pin Functions

PIN NAME (P1.x)	x	FUNCTION	CONTROL BITS AND SIGNALS[1]				
			P1DIR.x	P1SEL.x	P1SEL2.x	ADC10AE.x INCH.x=1[2]	CAPD.y
P1.3/	3	P1.x (I/O)	I: 0; O: 1	0	0	0	0
ADC10CLK[2]/		ADC10CLK	1	1	0	0	0
CAOUT/		CAOUT	1	1	1	0	0
A3[2]/		A3	X	X	X	1 (y = 3)	0
VREF-[2]/		VREF-	X	X	X	1	0
VEREF-[2]/		VEREF-	X	X	X	1	0
CA3/		CA3	X	X	X	0	1 (y = 3)
Pin Osc		Capacitive sensing	X	0	1	0	0

(1) X = don't care
(2) MSP430G2x53 devices only

Port P1 Pin Schematic: P1.4, Input/Output With Schmitt Trigger

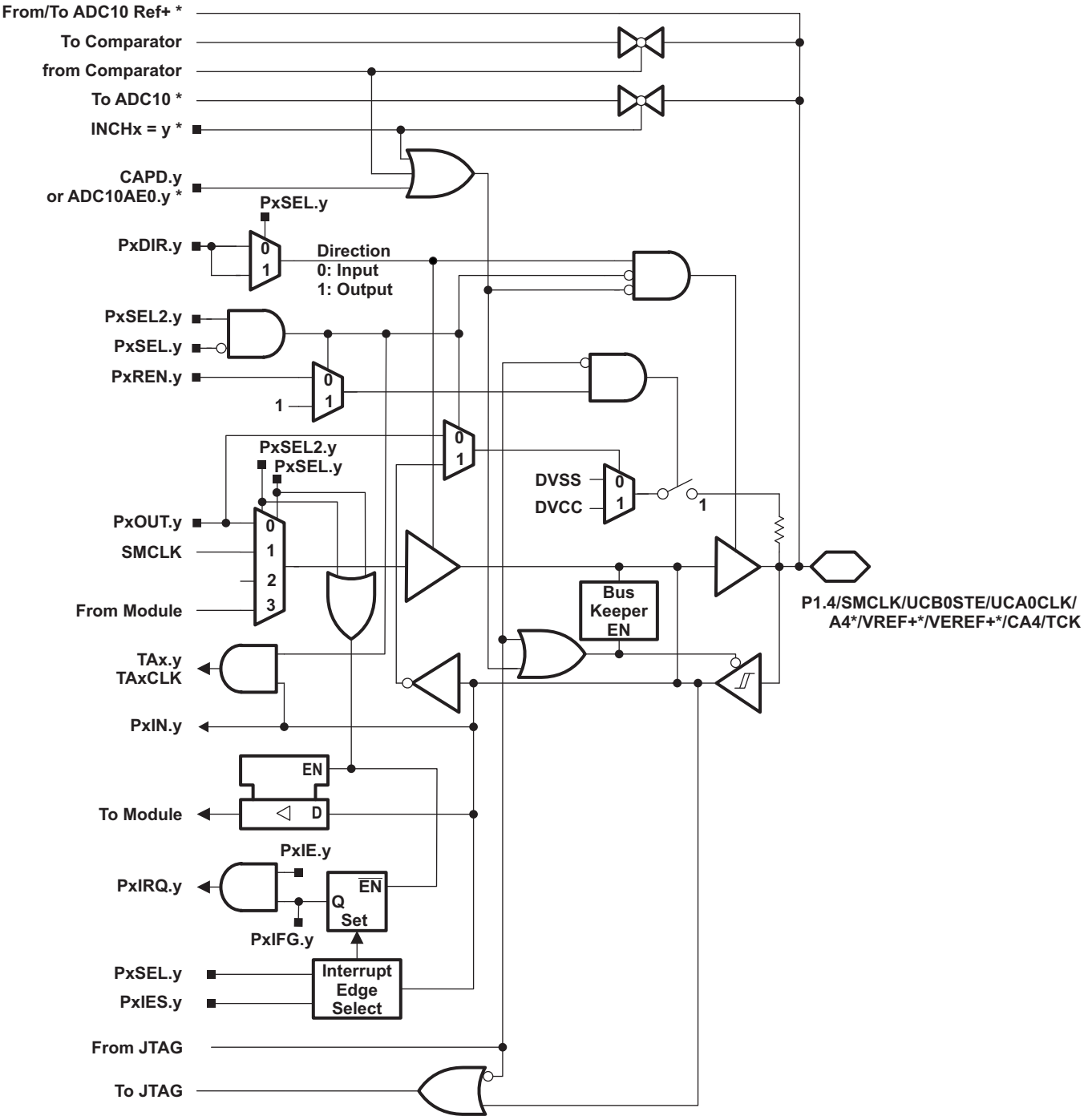

* Note: MSP430G2x52 devices only. MSP430G2x12 devices have no ADC10.

Copyright © 2011–2013, Texas Instruments Incorporated

Table 18. Port P1 (P1.4) Pin Functions

PIN NAME (P1.x)	x	FUNCTION	CONTROL BITS AND SIGNALS[1]					
			P1DIR.x	P1SEL.x	P1SEL2.x	ADC10AE.x INCH.x=1[2]	JTAG Mode	CAPD.y
P1.4/	4	P1.x (I/O)	I: 0; O: 1	0	0	0	0	0
SMCLK/		SMCLK	1	1	0	0	0	0
UCB0STE/		UCB0STE	from USCI	1	1	0	0	0
UCA0CLK/		UCA0CLK	from USCI	1	1	0	0	0
VREF+[2]/		VREF+	X	X	X	1	0	0
VEREF+[2]/		VEREF+	X	X	X	1	0	0
A4[2]/		A4	X	X	X	1 (y = 4)	0	0
CA4		CA4	X	X	X	0	0	1 (y = 4)
TCK/		TCK	X	X	X	0	1	0
Pin Osc		Capacitive sensing	X	0	1	0	0	0

(1) X = don't care
(2) MSP430G2x53 devices only

Port P1 Pin Schematic: P1.5 to P1.7, Input/Output With Schmitt Trigger

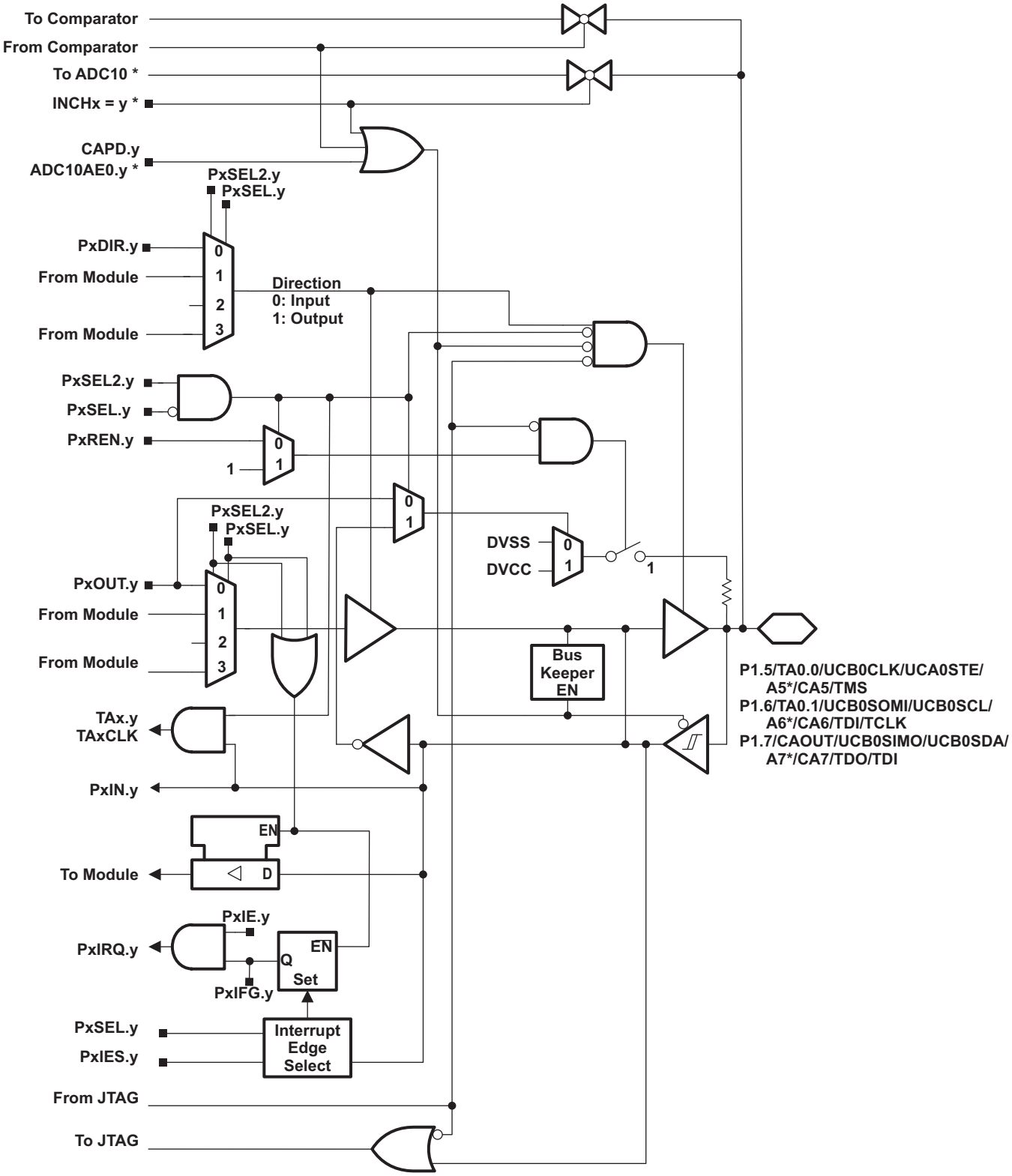

* Note: MSP430G2x53 devices only. MSP430G2x13 devices have no ADC10.

Copyright © 2011–2013, Texas Instruments Incorporated

Table 19. Port P1 (P1.5 to P1.7) Pin Functions

PIN NAME (P1.x)	x	FUNCTION	CONTROL BITS AND SIGNALS[1]					
			P1DIR.x	P1SEL.x	P1SEL2.x	ADC10AE.x INCH.x=1[2]	JTAG Mode	CAPD.y
P1.5/	5	P1.x (I/O)	I: 0; O: 1	0	0	0	0	0
TA0.0/		TA0.0	1	1	0	0	0	0
UCB0CLK/		UCB0CLK	from USCI	1	1	0	0	0
UCA0STE/		UCA0STE	from USCI	1	1	0	0	0
A5[2]/		A5	X	X	X	1 (y = 5)	0	0
CA5		CA5	X	X	X	0	0	1 (y = 5)
TMS		TMS	X	X	X	0	1	0
Pin Osc		Capacitive sensing	X	0	1	0	0	0
P1.6/	6	P1.x (I/O)	I: 0; O: 1	0	0	0	0	0
TA0.1/		TA0.1	1	1	0	0	0	0
UCB0SOMI/		UCB0SOMI	from USCI	1	1	0	0	0
UCB0SCL/		UCB0SCL	from USCI	1	1	0	0	0
A6[2]/		A6	X	X	X	1 (y = 6)	0	0
CA6		CA6	X	X	X	0	0	1 (y = 6)
TDI/TCLK/		TDI/TCLK	X	X	X	0	1	0
Pin Osc		Capacitive sensing	X	0	1	0	0	0
P1.7/	7	P1.x (I/O)	I: 0; O: 1	0	0	0	0	0
UCB0SIMO/		UCB0SIMO	from USCI	1	1	0	0	0
UCB0SDA/		UCB0SDA	from USCI	1	1	0	0	0
A7[2]/		A7	X	X	X	1 (y = 7)	0	0
CA7		CA7	X	X	X	0	0	1 (y = 7)
CAOUT		CAOUT	1	1	0	0	0	0
TDO/TDI/		TDO/TDI	X	X	X	0	1	0
Pin Osc		Capacitive sensing	X	0	1	0	0	0

(1) X = don't care
(2) MSP430G2x53 devices only

Copyright © 2011–2013, Texas Instruments Incorporated

Port P2 Pin Schematic: P2.0 to P2.5, Input/Output With Schmitt Trigger

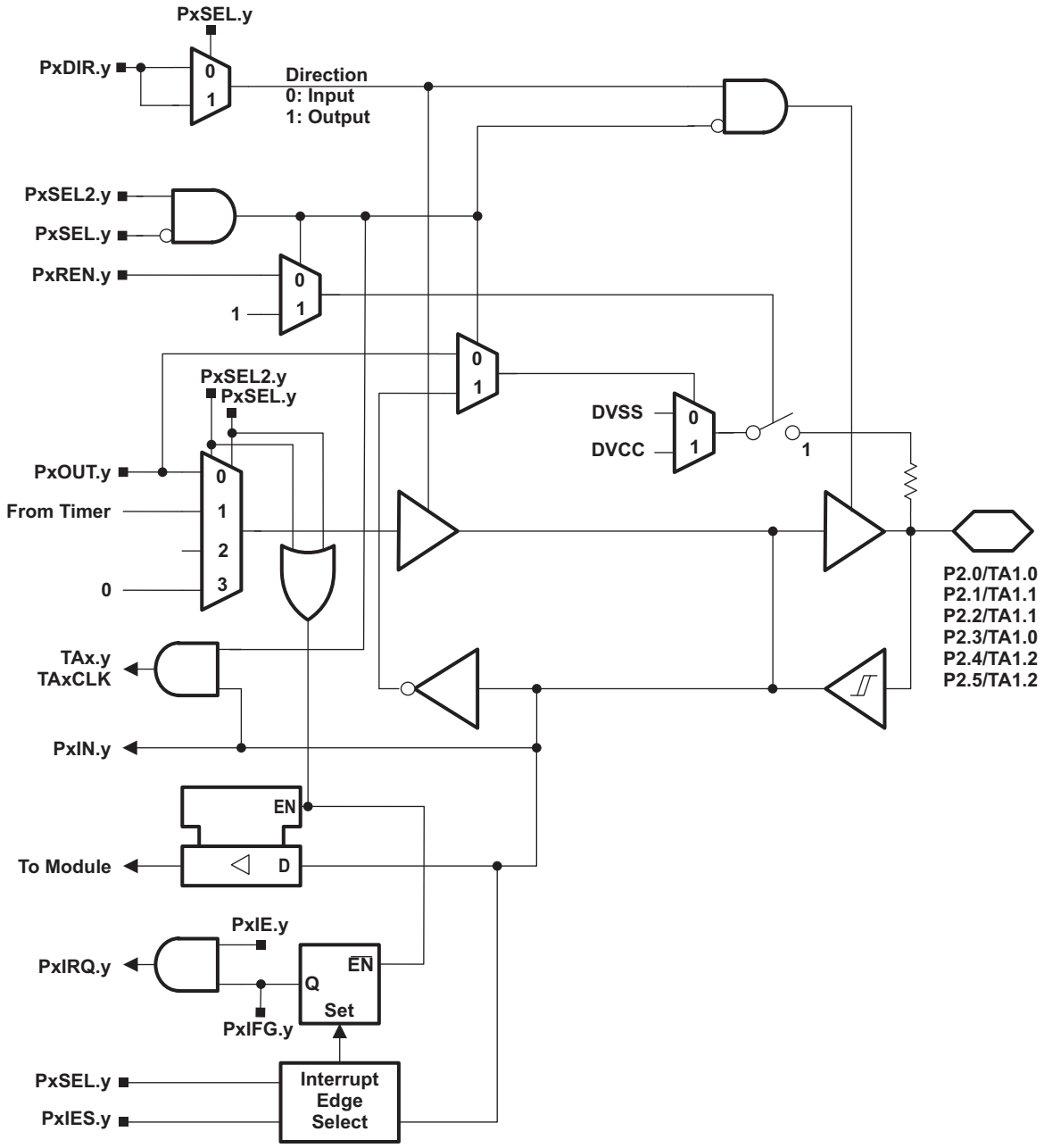

Copyright © 2011–2013, Texas Instruments Incorporated

Table 20. Port P2 (P2.0 to P2.5) Pin Functions

PIN NAME (P2.x)	x	FUNCTION	CONTROL BITS AND SIGNALS[1]		
			P2DIR.x	P2SEL.x	P2SEL2.x
P2.0/	0	P2.x (I/O)	I: 0; O: 1	0	0
TA1.0/		Timer1_A3.CCI0A	0	1	0
		Timer1_A3.TA0	1	1	0
Pin Osc		Capacitive sensing	X	0	1
P2.1/	1	P2.x (I/O)	I: 0; O: 1	0	0
TA1.1/		Timer1_A3.CCI1A	0	1	0
		Timer1_A3.TA1	1	1	0
Pin Osc		Capacitive sensing	X	0	1
P2.2/	2	P2.x (I/O)	I: 0; O: 1	0	0
TA1.1/		Timer1_A3.CCI1B	0	1	0
		Timer1_A3.TA1	1	1	0
Pin Osc		Capacitive sensing	X	0	1
P2.3/	3	P2.x (I/O)	I: 0; O: 1	0	0
TA1.0/		Timer1_A3.CCI0B	0	1	0
		Timer1_A3.TA0	1	1	0
Pin Osc		Capacitive sensing	X	0	1
P2.4/	4	P2.x (I/O)	I: 0; O: 1	0	0
TA1.2/		Timer1_A3.CCI2A	0	1	0
		Timer1_A3.TA2	1	1	0
Pin Osc		Capacitive sensing	X	0	1
P2.5/	5	P2.x (I/O)	I: 0; O: 1	0	0
TA1.2/		Timer1_A3.CCI2B	0	1	0
		Timer1_A3.TA2	1	1	0
Pin Osc		Capacitive sensing	X	0	1

(1) X = don't care

Port P2 Pin Schematic: P2.6, Input/Output With Schmitt Trigger

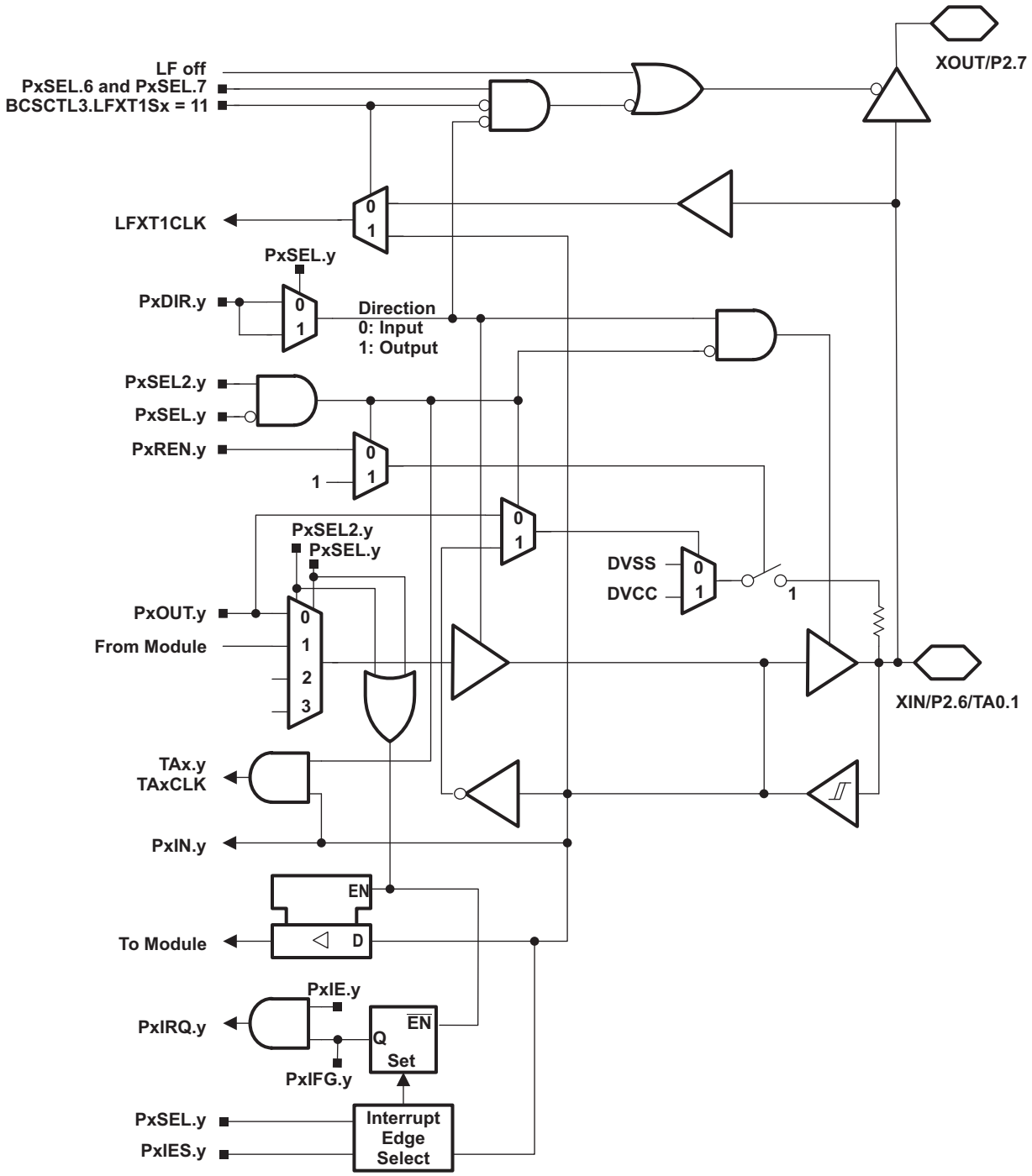

Copyright © 2011–2013, Texas Instruments Incorporated

Table 21. Port P2 (P2.6) Pin Functions

PIN NAME (P2.x)	x	FUNCTION	CONTROL BITS AND SIGNALS[1]		
			P2DIR.x	P2SEL.6 P2SEL.7	P2SEL2.6 P2SEL2.7
XIN	6	XIN	0	1 1	0 0
P2.6		P2.x (I/O)	I: 0; O: 1	0 X	0 0
TA0.1		Timer0_A3.TA1	1	1 0	0 0
Pin Osc		Capacitive sensing	X	0 X	1 X

(1) X = don't care

Port P2 Pin Schematic: P2.7, Input/Output With Schmitt Trigger

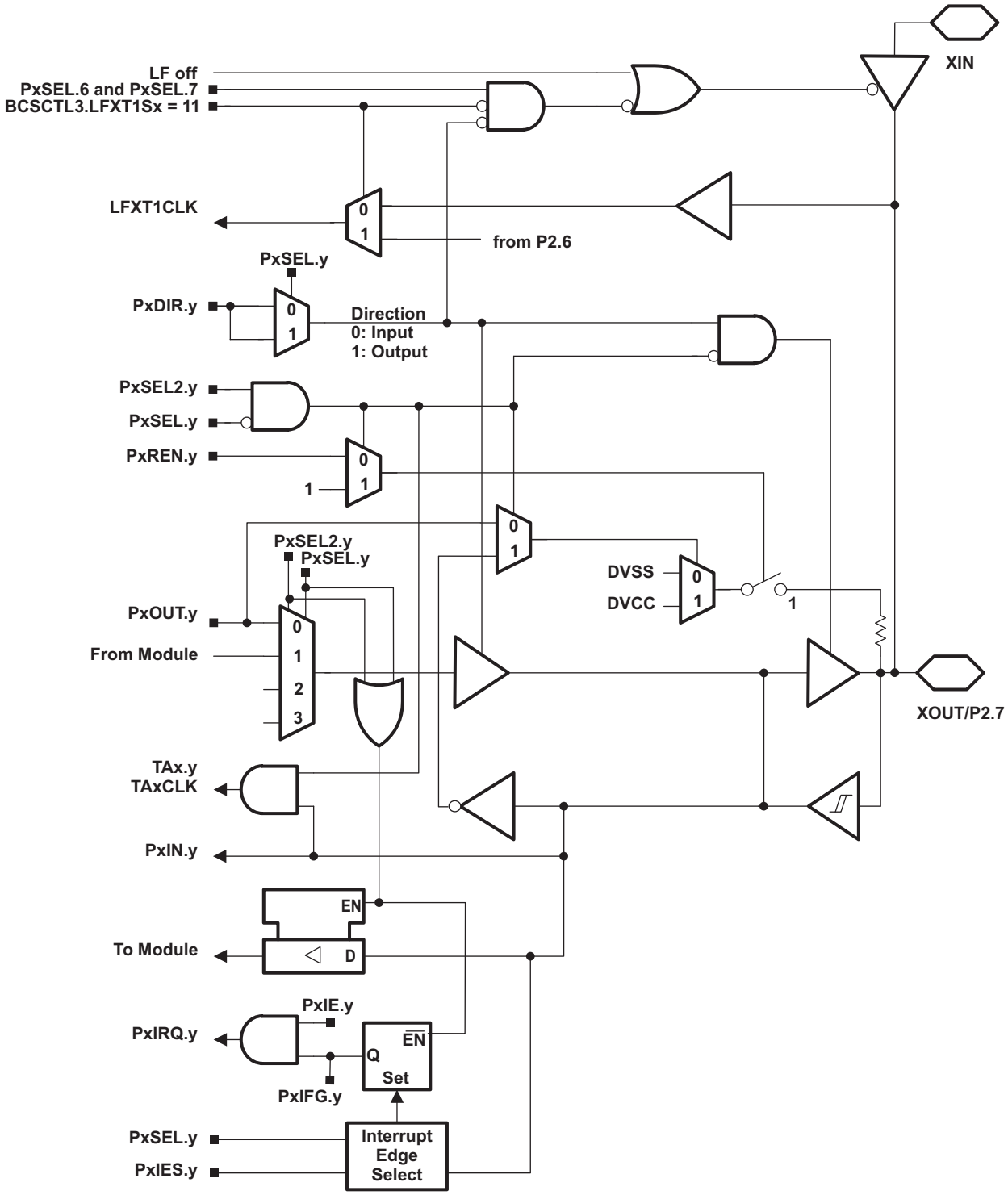

Copyright © 2011–2013, Texas Instruments Incorporated

Table 22. Port P2 (P2.7) Pin Functions

PIN NAME (P2.x)	x	FUNCTION	CONTROL BITS AND SIGNALS[1]		
			P2DIR.x	P2SEL.6 P2SEL.7	P2SEL2.6 P2SEL2.7
XOUT/	7	XOUT	1	1 1	0 0
P2.7/		P2.x (I/O)	I: 0; O: 1	0 X	0 0
Pin Osc		Capacitive sensing	X	0 X	1 X

(1) X = don't care

Port P3 Pin Schematic: P3.0 to P3.7, Input/Output With Schmitt Trigger (28-Pin PW and 32-Pin RHB Packages Only)

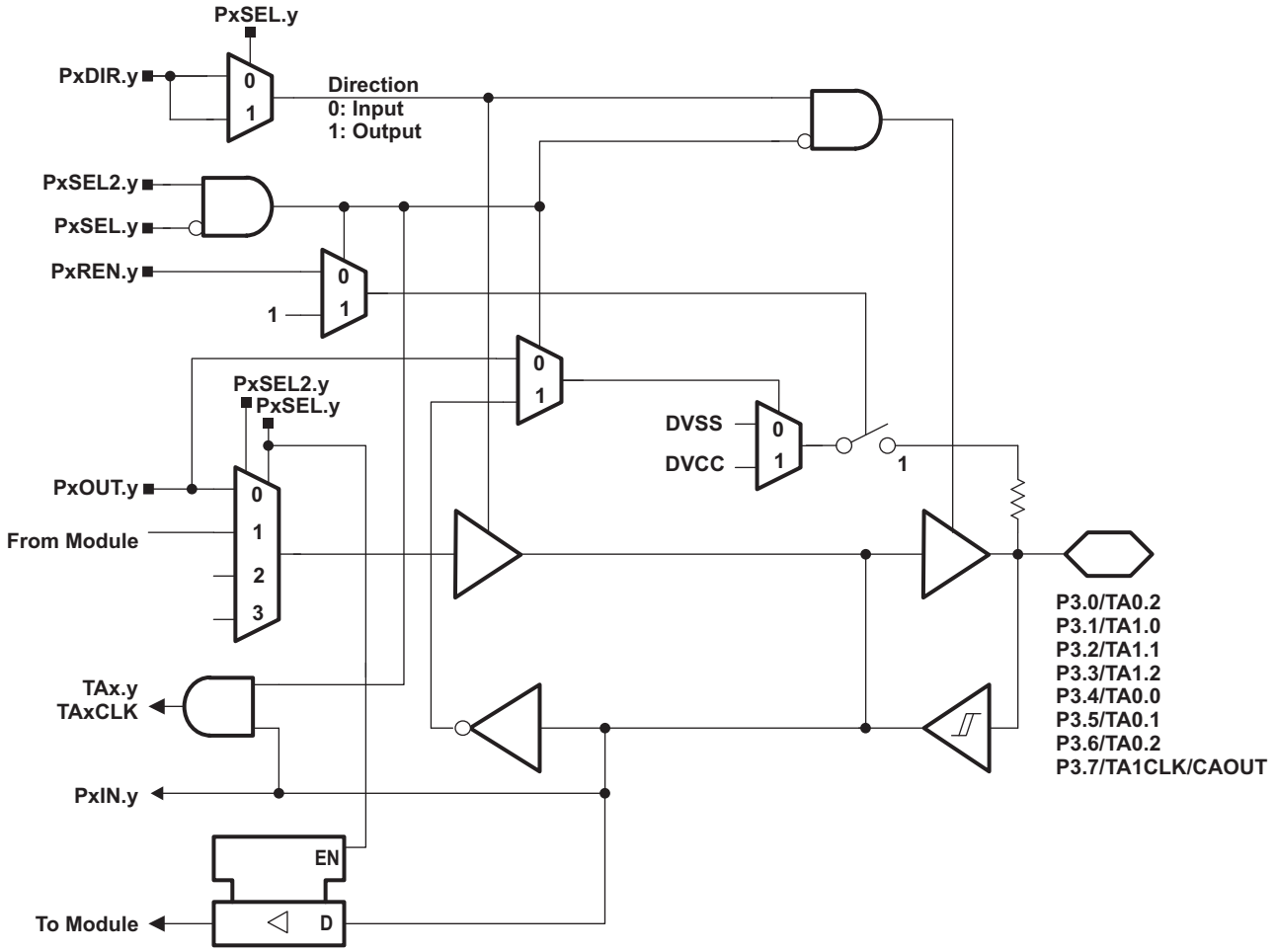

Copyright © 2011–2013, Texas Instruments Incorporated

Table 23. Port P3 (P3.0 to P3.7) Pin Functions (28-Pin PW and 32-Pin RHB Packages Only)

PIN NAME (P3.x)	x	FUNCTION	CONTROL BITS AND SIGNALS (1)		
			P3DIR.x	P3SEL.x	P3SEL2.x
P3.0/	0	P3.x (I/O)	I: 0; O: 1	0	0
TA0.2/		Timer0_A3.CCI2A	0	1	0
		Timer0_A3.TA2	1	1	0
Pin Osc		Capacitive sensing	X	0	1
P3.1/	1	P3.x (I/O)	I: 0; O: 1	0	0
TA1.0/		Timer1_A3.TA0	1	1	0
Pin Osc		Capacitive sensing	X	0	1
P3.2/	2	P3.x (I/O)	I: 0; O: 1	0	0
TA1.1/		Timer1_A3.TA1	1	1	0
Pin Osc		Capacitive sensing	X	0	1
P3.3/	3	P3.x (I/O)	I: 0; O: 1	0	0
TA1.2/		Timer1_A3.TA2	1	1	0
Pin Osc		Capacitive sensing	X	0	1
P3.4/	4	P3.x (I/O)	I: 0; O: 1	0	0
TA0.0/		Timer0_A3.TA0	1	1	0
Pin Osc		Capacitive sensing	X	0	1
P3.5/	5	P3.x (I/O)	I: 0; O: 1	0	0
TA0.1/		Timer0_A3.TA1	1	1	0
Pin Osc		Capacitive sensing	X	0	1
P3.6/	6	P3.x (I/O)	I: 0; O: 1	0	0
TA0.2/		Timer0_A3.TA2	1	1	0
Pin Osc		Capacitive sensing	X	0	1
P3.7/	7	P3.x (I/O)	I: 0; O: 1	0	0
TA1CLK/		Timer1_A3.TACLK	0	1	0
CAOUT/		Comparator output	1	1	0
Pin Osc		Capacitive sensing	X	0	1

(1) X = don't care

Copyright © 2011–2013, Texas Instruments Incorporated

REVISION HISTORY

REVISION	DESCRIPTION
SLAS735	Initial release
SLAS735A	Changed Control Bits / Signals column in Table 18 Changed Pin Name and Function columns in Table 23
SLAS735B	Changed Storage temperature range limit in Absolute Maximum Ratings Added BSL functions to P1.1 and P1.5 in Table 2. Added CAOUT information to Table 17.
SLAS735C	Changed T_{stg}, Programmed device, to -55°C to 150°C in Absolute Maximum Ratings. Changed TAG_ADC10_1 value to 0x10 in Table 10.
SLAS735D	Added AVCC (RHB package only, pin 29) to Table 2 Terminal Functions. Corrected typo in P3.7/TA1CLK/CAOUT description in Table 2. Corrected PW28 terminal assignment in Input and Output Pin Number columns in Table 13. Changed all port schematics (added buffer after PxOUT.y mux) in Port Schematics.
SLAS735E	Table 5 and Table 14, Corrected Timer_A register names.
SLAS735F	Added note on TC_{REF+} in 10-Bit ADC, Built-In Voltage Reference (MSP430G2x53 Only). Corrected signal names on Port P1 Pin Schematic: P1.4, Input/Output With Schmitt Trigger.
SLAS735G	Recommended Operating Conditions, Removed mention of USART module from f_{SYSTEM} description. Port P3 Pin Schematic: P3.0 to P3.7, Input/Output With Schmitt Trigger (28-Pin PW and 32-Pin RHB Packages Only), Added PW28 to available packages.
SLAS735H	Recommended Operating Conditions, Added test conditions for typical values. Pin-Oscillator Frequency – Ports Px, Corrected resistor value in note (1). POR, BOR, Added note (2).
SLAS735I	Throughout, Changed all variations of touch sense(1) to capacitive touch.
SLAS735J	Removed all information regarding MSP430G2113.

(1) TouchSense is a trademark of Immersion Corporation.

Copyright © 2011–2013, Texas Instruments Incorporated

PACKAGING INFORMATION

Orderable part number	Status (1)	Material type (2)	Package | Pins	Package qty | Carrier	RoHS (3)	Lead finish/ Ball material (4)	MSL rating/ Peak reflow (5)	Op temp (°C)	Part marking (6)
M430G2553IPW28RG4	Active	Production	TSSOP (PW) | 28	2000 | LARGE T&R	Yes	NIPDAU	Level-1-260C-UNLIM	-40 to 85	430G2553
M430G2553IPW28RG4.A	Active	Production	TSSOP (PW) | 28	2000 | LARGE T&R	Yes	NIPDAU	Level-1-260C-UNLIM	-40 to 85	430G2553
M430G2553IPW28RG4.B	Active	Production	TSSOP (PW) | 28	2000 | LARGE T&R	Yes	NIPDAU	Level-1-260C-UNLIM	-40 to 85	430G2553
M430G2553IRHB32RG4	Active	Production	VQFN (RHB) | 32	3000 | LARGE T&R	Yes	NIPDAU	Level-2-260C-1 YEAR	-40 to 85	MSP430 G2553
M430G2553IRHB32RG4.A	Active	Production	VQFN (RHB) | 32	3000 | LARGE T&R	Yes	NIPDAU	Level-2-260C-1 YEAR	-40 to 85	MSP430 G2553
M430G2553IRHB32RG4.B	Active	Production	VQFN (RHB) | 32	3000 | LARGE T&R	Yes	NIPDAU	Level-2-260C-1 YEAR	-40 to 85	MSP430 G2553
MSP430G2113IN20	Active	Production	PDIP (N) | 20	20 | TUBE	Yes	NIPDAU	Level-1-260C-UNLIM	-40 to 85	M430G2113
MSP430G2113IN20.A	Active	Production	PDIP (N) | 20	20 | TUBE	Yes	NIPDAU	Level-1-260C-UNLIM	-40 to 85	M430G2113
MSP430G2113IN20.B	Active	Production	PDIP (N) | 20	20 | TUBE	Yes	NIPDAU	Level-1-260C-UNLIM	-40 to 85	M430G2113
MSP430G2153IN20	Active	Production	PDIP (N) | 20	20 | TUBE	Yes	NIPDAU	Level-1-260C-UNLIM	-40 to 85	M430G2153
MSP430G2153IN20.A	Active	Production	PDIP (N) | 20	20 | TUBE	Yes	NIPDAU	Level-1-260C-UNLIM	-40 to 85	M430G2153
MSP430G2153IN20.B	Active	Production	PDIP (N) | 20	20 | TUBE	Yes	NIPDAU	Level-1-260C-UNLIM	-40 to 85	M430G2153
MSP430G2153IPW20	Active	Production	TSSOP (PW) | 20	70 | TUBE	Yes	NIPDAU	Level-1-260C-UNLIM	-40 to 85	430G2153
MSP430G2153IPW20.A	Active	Production	TSSOP (PW) | 20	70 | TUBE	Yes	NIPDAU	Level-1-260C-UNLIM	-40 to 85	430G2153
MSP430G2153IPW20.B	Active	Production	TSSOP (PW) | 20	70 | TUBE	Yes	NIPDAU	Level-1-260C-UNLIM	-40 to 85	430G2153
MSP430G2153IPW20R	Active	Production	TSSOP (PW) | 20	2000 | LARGE T&R	Yes	NIPDAU	Level-1-260C-UNLIM	-40 to 85	430G2153
MSP430G2153IPW20R.A	Active	Production	TSSOP (PW) | 20	2000 | LARGE T&R	Yes	NIPDAU	Level-1-260C-UNLIM	-40 to 85	430G2153
MSP430G2153IPW20R.B	Active	Production	TSSOP (PW) | 20	2000 | LARGE T&R	Yes	NIPDAU	Level-1-260C-UNLIM	-40 to 85	430G2153
MSP430G2153IPW28	Active	Production	TSSOP (PW) | 28	50 | TUBE	Yes	NIPDAU | NIPDAU	Level-1-260C-UNLIM	-40 to 85	430G2153
MSP430G2153IPW28.A	Active	Production	TSSOP (PW) | 28	50 | TUBE	Yes	NIPDAU	Level-1-260C-UNLIM	-40 to 85	430G2153
MSP430G2153IPW28.B	Active	Production	TSSOP (PW) | 28	50 | TUBE	Yes	NIPDAU	Level-1-260C-UNLIM	-40 to 85	430G2153
MSP430G2153IPW28R	Active	Production	TSSOP (PW) | 28	2000 | LARGE T&R	Yes	NIPDAU | NIPDAU	Level-1-260C-UNLIM	-40 to 85	430G2153
MSP430G2153IPW28R.A	Active	Production	TSSOP (PW) | 28	2000 | LARGE T&R	Yes	NIPDAU	Level-1-260C-UNLIM	-40 to 85	430G2153
MSP430G2153IPW28R.B	Active	Production	TSSOP (PW) | 28	2000 | LARGE T&R	Yes	NIPDAU	Level-1-260C-UNLIM	-40 to 85	430G2153
MSP430G2153IRHB32R	Active	Production	VQFN (RHB) | 32	3000 | LARGE T&R	Yes	NIPDAU	Level-2-260C-1 YEAR	-40 to 85	MSP430 G2153

Orderable part number	Status (1)	Material type (2)	Package | Pins	Package qty | Carrier	RoHS (3)	Lead finish/ Ball material (4)	MSL rating/ Peak reflow (5)	Op temp (°C)	Part marking (6)
MSP430G2153IRHB32R.A	Active	Production	VQFN (RHB) | 32	3000 | LARGE T&R	Yes	NIPDAU	Level-2-260C-1 YEAR	-40 to 85	MSP430 G2153
MSP430G2153IRHB32R.B	Active	Production	VQFN (RHB) | 32	3000 | LARGE T&R	Yes	NIPDAU	Level-2-260C-1 YEAR	-40 to 85	MSP430 G2153
MSP430G2153IRHB32T	Active	Production	VQFN (RHB) | 32	250 | SMALL T&R	Yes	NIPDAU	Level-2-260C-1 YEAR	-40 to 85	MSP430 G2153
MSP430G2153IRHB32T.A	Active	Production	VQFN (RHB) | 32	250 | SMALL T&R	Yes	NIPDAU	Level-2-260C-1 YEAR	-40 to 85	MSP430 G2153
MSP430G2153IRHB32T.B	Active	Production	VQFN (RHB) | 32	250 | SMALL T&R	Yes	NIPDAU	Level-2-260C-1 YEAR	-40 to 85	MSP430 G2153
MSP430G2213IN20	Active	Production	PDIP (N) | 20	20 | TUBE	Yes	NIPDAU	Level-1-260C-UNLIM	-40 to 85	M430G2213
MSP430G2213IN20.A	Active	Production	PDIP (N) | 20	20 | TUBE	Yes	NIPDAU	Level-1-260C-UNLIM	-40 to 85	M430G2213
MSP430G2213IN20.B	Active	Production	PDIP (N) | 20	20 | TUBE	Yes	NIPDAU	Level-1-260C-UNLIM	-40 to 85	M430G2213
MSP430G2213IPW20	Active	Production	TSSOP (PW) | 20	70 | TUBE	Yes	NIPDAU	Level-1-260C-UNLIM	-40 to 85	430G2213
MSP430G2213IPW20.A	Active	Production	TSSOP (PW) | 20	70 | TUBE	Yes	NIPDAU	Level-1-260C-UNLIM	-40 to 85	430G2213
MSP430G2213IPW20.B	Active	Production	TSSOP (PW) | 20	70 | TUBE	Yes	NIPDAU	Level-1-260C-UNLIM	-40 to 85	430G2213
MSP430G2213IPW20R	Active	Production	TSSOP (PW) | 20	2000 | LARGE T&R	Yes	NIPDAU	Level-1-260C-UNLIM	-40 to 85	430G2213
MSP430G2213IPW20R.A	Active	Production	TSSOP (PW) | 20	2000 | LARGE T&R	Yes	NIPDAU	Level-1-260C-UNLIM	-40 to 85	430G2213
MSP430G2213IPW20R.B	Active	Production	TSSOP (PW) | 20	2000 | LARGE T&R	Yes	NIPDAU	Level-1-260C-UNLIM	-40 to 85	430G2213
MSP430G2213IPW28	Active	Production	TSSOP (PW) | 28	50 | TUBE	Yes	NIPDAU | NIPDAU	Level-1-260C-UNLIM	-40 to 85	430G2213
MSP430G2213IPW28.A	Active	Production	TSSOP (PW) | 28	50 | TUBE	Yes	NIPDAU	Level-1-260C-UNLIM	-40 to 85	430G2213
MSP430G2213IPW28.B	Active	Production	TSSOP (PW) | 28	50 | TUBE	Yes	NIPDAU	Level-1-260C-UNLIM	-40 to 85	430G2213
MSP430G2213IRHB32R	Active	Production	VQFN (RHB) | 32	3000 | LARGE T&R	Yes	NIPDAU	Level-2-260C-1 YEAR	-40 to 85	MSP430 G2213
MSP430G2213IRHB32R.A	Active	Production	VQFN (RHB) | 32	3000 | LARGE T&R	Yes	NIPDAU	Level-2-260C-1 YEAR	-40 to 85	MSP430 G2213
MSP430G2213IRHB32R.B	Active	Production	VQFN (RHB) | 32	3000 | LARGE T&R	Yes	NIPDAU	Level-2-260C-1 YEAR	-40 to 85	MSP430 G2213
MSP430G2213IRHB32T	Active	Production	VQFN (RHB) | 32	250 | SMALL T&R	Yes	NIPDAU	Level-2-260C-1 YEAR	-40 to 85	MSP430 G2213
MSP430G2213IRHB32T.A	Active	Production	VQFN (RHB) | 32	250 | SMALL T&R	Yes	NIPDAU	Level-2-260C-1 YEAR	-40 to 85	MSP430 G2213
MSP430G2213IRHB32T.B	Active	Production	VQFN (RHB) | 32	250 | SMALL T&R	Yes	NIPDAU	Level-2-260C-1 YEAR	-40 to 85	MSP430 G2213

Orderable part number	Status (1)	Material type (2)	Package | Pins	Package qty | Carrier	RoHS (3)	Lead finish/ Ball material (4)	MSL rating/ Peak reflow (5)	Op temp (°C)	Part marking (6)
MSP430G2253IN20	Active	Production	PDIP (N) | 20	20 | TUBE	Yes	NIPDAU	Level-1-260C-UNLIM	-40 to 85	M430G2253
MSP430G2253IN20.A	Active	Production	PDIP (N) | 20	20 | TUBE	Yes	NIPDAU	Level-1-260C-UNLIM	-40 to 85	M430G2253
MSP430G2253IN20.B	Active	Production	PDIP (N) | 20	20 | TUBE	Yes	NIPDAU	Level-1-260C-UNLIM	-40 to 85	M430G2253
MSP430G2253IPW20	Active	Production	TSSOP (PW) | 20	70 | TUBE	Yes	NIPDAU	Level-1-260C-UNLIM	-40 to 85	430G2253
MSP430G2253IPW20.A	Active	Production	TSSOP (PW) | 20	70 | TUBE	Yes	NIPDAU	Level-1-260C-UNLIM	-40 to 85	430G2253
MSP430G2253IPW20.B	Active	Production	TSSOP (PW) | 20	70 | TUBE	Yes	NIPDAU	Level-1-260C-UNLIM	-40 to 85	430G2253
MSP430G2253IPW20R	Active	Production	TSSOP (PW) | 20	2000 | LARGE T&R	Yes	NIPDAU	Level-1-260C-UNLIM	-40 to 85	430G2253
MSP430G2253IPW20R.A	Active	Production	TSSOP (PW) | 20	2000 | LARGE T&R	Yes	NIPDAU	Level-1-260C-UNLIM	-40 to 85	430G2253
MSP430G2253IPW20R.B	Active	Production	TSSOP (PW) | 20	2000 | LARGE T&R	Yes	NIPDAU	Level-1-260C-UNLIM	-40 to 85	430G2253
MSP430G2253IPW28	Active	Production	TSSOP (PW) | 28	50 | TUBE	Yes	NIPDAU | NIPDAU	Level-1-260C-UNLIM	-40 to 85	430G2253
MSP430G2253IPW28.A	Active	Production	TSSOP (PW) | 28	50 | TUBE	Yes	NIPDAU	Level-1-260C-UNLIM	-40 to 85	430G2253
MSP430G2253IPW28.B	Active	Production	TSSOP (PW) | 28	50 | TUBE	Yes	NIPDAU	Level-1-260C-UNLIM	-40 to 85	430G2253
MSP430G2253IPW28R	Active	Production	TSSOP (PW) | 28	2000 | LARGE T&R	Yes	NIPDAU | NIPDAU	Level-1-260C-UNLIM	-40 to 85	430G2253
MSP430G2253IPW28R.A	Active	Production	TSSOP (PW) | 28	2000 | LARGE T&R	Yes	NIPDAU	Level-1-260C-UNLIM	-40 to 85	430G2253
MSP430G2253IPW28R.B	Active	Production	TSSOP (PW) | 28	2000 | LARGE T&R	Yes	NIPDAU	Level-1-260C-UNLIM	-40 to 85	430G2253
MSP430G2253IRHB32R	Active	Production	VQFN (RHB) | 32	3000 | LARGE T&R	Yes	NIPDAU	Level-2-260C-1 YEAR	-40 to 85	MSP430 G2253
MSP430G2253IRHB32R.A	Active	Production	VQFN (RHB) | 32	3000 | LARGE T&R	Yes	NIPDAU	Level-2-260C-1 YEAR	-40 to 85	MSP430 G2253
MSP430G2253IRHB32R.B	Active	Production	VQFN (RHB) | 32	3000 | LARGE T&R	Yes	NIPDAU	Level-2-260C-1 YEAR	-40 to 85	MSP430 G2253
MSP430G2253IRHB32T	Active	Production	VQFN (RHB) | 32	250 | SMALL T&R	Yes	NIPDAU	Level-2-260C-1 YEAR	-40 to 85	MSP430 G2253
MSP430G2253IRHB32T.A	Active	Production	VQFN (RHB) | 32	250 | SMALL T&R	Yes	NIPDAU	Level-2-260C-1 YEAR	-40 to 85	MSP430 G2253
MSP430G2253IRHB32T.B	Active	Production	VQFN (RHB) | 32	250 | SMALL T&R	Yes	NIPDAU	Level-2-260C-1 YEAR	-40 to 85	MSP430 G2253
MSP430G2313IN20	Active	Production	PDIP (N) | 20	20 | TUBE	Yes	NIPDAU	Level-1-260C-UNLIM	-40 to 85	M430G2313
MSP430G2313IN20.A	Active	Production	PDIP (N) | 20	20 | TUBE	Yes	NIPDAU	Level-1-260C-UNLIM	-40 to 85	M430G2313
MSP430G2313IN20.B	Active	Production	PDIP (N) | 20	20 | TUBE	Yes	NIPDAU	Level-1-260C-UNLIM	-40 to 85	M430G2313
MSP430G2313IPW20	Active	Production	TSSOP (PW) | 20	70 | TUBE	Yes	NIPDAU	Level-1-260C-UNLIM	-40 to 85	430G2313
MSP430G2313IPW20.A	Active	Production	TSSOP (PW) | 20	70 | TUBE	Yes	NIPDAU	Level-1-260C-UNLIM	-40 to 85	430G2313

Orderable part number	Status (1)	Material type (2)	Package | Pins	Package qty | Carrier	RoHS (3)	Lead finish/ Ball material (4)	MSL rating/ Peak reflow (5)	Op temp (°C)	Part marking (6)
MSP430G2313IPW20.B	Active	Production	TSSOP (PW) | 20	70 | TUBE	Yes	NIPDAU	Level-1-260C-UNLIM	-40 to 85	430G2313
MSP430G2313IPW20R	Active	Production	TSSOP (PW) | 20	2000 | LARGE T&R	Yes	NIPDAU	Level-1-260C-UNLIM	-40 to 85	430G2313
MSP430G2313IPW20R.A	Active	Production	TSSOP (PW) | 20	2000 | LARGE T&R	Yes	NIPDAU	Level-1-260C-UNLIM	-40 to 85	430G2313
MSP430G2313IPW20R.B	Active	Production	TSSOP (PW) | 20	2000 | LARGE T&R	Yes	NIPDAU	Level-1-260C-UNLIM	-40 to 85	430G2313
MSP430G2313IPW28	Active	Production	TSSOP (PW) | 28	50 | TUBE	Yes	NIPDAU | NIPDAU	Level-1-260C-UNLIM	-40 to 85	430G2313
MSP430G2313IPW28.A	Active	Production	TSSOP (PW) | 28	50 | TUBE	Yes	NIPDAU	Level-1-260C-UNLIM	-40 to 85	430G2313
MSP430G2313IPW28.B	Active	Production	TSSOP (PW) | 28	50 | TUBE	Yes	NIPDAU	Level-1-260C-UNLIM	-40 to 85	430G2313
MSP430G2313IRHB32R	Active	Production	VQFN (RHB) | 32	3000 | LARGE T&R	Yes	NIPDAU	Level-2-260C-1 YEAR	-40 to 85	MSP430 G2313
MSP430G2313IRHB32R.A	Active	Production	VQFN (RHB) | 32	3000 | LARGE T&R	Yes	NIPDAU	Level-2-260C-1 YEAR	-40 to 85	MSP430 G2313
MSP430G2313IRHB32R.B	Active	Production	VQFN (RHB) | 32	3000 | LARGE T&R	Yes	NIPDAU	Level-2-260C-1 YEAR	-40 to 85	MSP430 G2313
MSP430G2313IRHB32T	Active	Production	VQFN (RHB) | 32	250 | SMALL T&R	Yes	NIPDAU	Level-2-260C-1 YEAR	-40 to 85	MSP430 G2313
MSP430G2313IRHB32T.A	Active	Production	VQFN (RHB) | 32	250 | SMALL T&R	Yes	NIPDAU	Level-2-260C-1 YEAR	-40 to 85	MSP430 G2313
MSP430G2313IRHB32T.B	Active	Production	VQFN (RHB) | 32	250 | SMALL T&R	Yes	NIPDAU	Level-2-260C-1 YEAR	-40 to 85	MSP430 G2313
MSP430G2353IN20	Active	Production	PDIP (N) | 20	20 | TUBE	Yes	NIPDAU	Level-1-260C-UNLIM	-40 to 85	M430G2353
MSP430G2353IN20.A	Active	Production	PDIP (N) | 20	20 | TUBE	Yes	NIPDAU	Level-1-260C-UNLIM	-40 to 85	M430G2353
MSP430G2353IN20.B	Active	Production	PDIP (N) | 20	20 | TUBE	Yes	NIPDAU	Level-1-260C-UNLIM	-40 to 85	M430G2353
MSP430G2353IPW20	Active	Production	TSSOP (PW) | 20	70 | TUBE	Yes	NIPDAU	Level-1-260C-UNLIM	-40 to 85	430G2353
MSP430G2353IPW20.A	Active	Production	TSSOP (PW) | 20	70 | TUBE	Yes	NIPDAU	Level-1-260C-UNLIM	-40 to 85	430G2353
MSP430G2353IPW20.B	Active	Production	TSSOP (PW) | 20	70 | TUBE	Yes	NIPDAU	Level-1-260C-UNLIM	-40 to 85	430G2353
MSP430G2353IPW20R	Active	Production	TSSOP (PW) | 20	2000 | LARGE T&R	Yes	NIPDAU	Level-1-260C-UNLIM	-40 to 85	430G2353
MSP430G2353IPW20R.A	Active	Production	TSSOP (PW) | 20	2000 | LARGE T&R	Yes	NIPDAU	Level-1-260C-UNLIM	-40 to 85	430G2353
MSP430G2353IPW20R.B	Active	Production	TSSOP (PW) | 20	2000 | LARGE T&R	Yes	NIPDAU	Level-1-260C-UNLIM	-40 to 85	430G2353
MSP430G2353IPW28	Active	Production	TSSOP (PW) | 28	50 | TUBE	Yes	NIPDAU | NIPDAU	Level-1-260C-UNLIM	-40 to 85	430G2353
MSP430G2353IPW28.A	Active	Production	TSSOP (PW) | 28	50 | TUBE	Yes	NIPDAU	Level-1-260C-UNLIM	-40 to 85	430G2353
MSP430G2353IPW28.B	Active	Production	TSSOP (PW) | 28	50 | TUBE	Yes	NIPDAU	Level-1-260C-UNLIM	-40 to 85	430G2353
MSP430G2353IPW28R	Active	Production	TSSOP (PW) | 28	2000 | LARGE T&R	Yes	NIPDAU | NIPDAU	Level-1-260C-UNLIM	-40 to 85	430G2353

Orderable part number	Status (1)	Material type (2)	Package | Pins	Package qty | Carrier	RoHS (3)	Lead finish/ Ball material (4)	MSL rating/ Peak reflow (5)	Op temp (°C)	Part marking (6)
MSP430G2353IPW28R.A	Active	Production	TSSOP (PW) | 28	2000 | LARGE T&R	Yes	NIPDAU	Level-1-260C-UNLIM	-40 to 85	430G2353
MSP430G2353IPW28R.B	Active	Production	TSSOP (PW) | 28	2000 | LARGE T&R	Yes	NIPDAU	Level-1-260C-UNLIM	-40 to 85	430G2353
MSP430G2353IRHB32R	Active	Production	VQFN (RHB) | 32	3000 | LARGE T&R	Yes	NIPDAU	Level-2-260C-1 YEAR	-40 to 85	MSP430 G2353
MSP430G2353IRHB32R.A	Active	Production	VQFN (RHB) | 32	3000 | LARGE T&R	Yes	NIPDAU	Level-2-260C-1 YEAR	-40 to 85	MSP430 G2353
MSP430G2353IRHB32R.B	Active	Production	VQFN (RHB) | 32	3000 | LARGE T&R	Yes	NIPDAU	Level-2-260C-1 YEAR	-40 to 85	MSP430 G2353
MSP430G2353IRHB32T	Active	Production	VQFN (RHB) | 32	250 | SMALL T&R	Yes	NIPDAU	Level-2-260C-1 YEAR	-40 to 85	MSP430 G2353
MSP430G2353IRHB32T.A	Active	Production	VQFN (RHB) | 32	250 | SMALL T&R	Yes	NIPDAU	Level-2-260C-1 YEAR	-40 to 85	MSP430 G2353
MSP430G2353IRHB32T.B	Active	Production	VQFN (RHB) | 32	250 | SMALL T&R	Yes	NIPDAU	Level-2-260C-1 YEAR	-40 to 85	MSP430 G2353
MSP430G2413IN20	Active	Production	PDIP (N) | 20	20 | TUBE	Yes	NIPDAU	Level-1-260C-UNLIM	-40 to 85	M430G2413
MSP430G2413IN20.A	Active	Production	PDIP (N) | 20	20 | TUBE	Yes	NIPDAU	Level-1-260C-UNLIM	-40 to 85	M430G2413
MSP430G2413IN20.B	Active	Production	PDIP (N) | 20	20 | TUBE	Yes	NIPDAU	Level-1-260C-UNLIM	-40 to 85	M430G2413
MSP430G2413IPW20	Active	Production	TSSOP (PW) | 20	70 | TUBE	Yes	NIPDAU	Level-1-260C-UNLIM	-40 to 85	430G2413
MSP430G2413IPW20.A	Active	Production	TSSOP (PW) | 20	70 | TUBE	Yes	NIPDAU	Level-1-260C-UNLIM	-40 to 85	430G2413
MSP430G2413IPW20.B	Active	Production	TSSOP (PW) | 20	70 | TUBE	Yes	NIPDAU	Level-1-260C-UNLIM	-40 to 85	430G2413
MSP430G2413IPW20R	Active	Production	TSSOP (PW) | 20	2000 | LARGE T&R	Yes	NIPDAU	Level-1-260C-UNLIM	-40 to 85	430G2413
MSP430G2413IPW20R.A	Active	Production	TSSOP (PW) | 20	2000 | LARGE T&R	Yes	NIPDAU	Level-1-260C-UNLIM	-40 to 85	430G2413
MSP430G2413IPW20R.B	Active	Production	TSSOP (PW) | 20	2000 | LARGE T&R	Yes	NIPDAU	Level-1-260C-UNLIM	-40 to 85	430G2413
MSP430G2413IPW28	Active	Production	TSSOP (PW) | 28	50 | TUBE	Yes	NIPDAU | NIPDAU	Level-1-260C-UNLIM	-40 to 85	430G2413
MSP430G2413IPW28.A	Active	Production	TSSOP (PW) | 28	50 | TUBE	Yes	NIPDAU	Level-1-260C-UNLIM	-40 to 85	430G2413
MSP430G2413IPW28.B	Active	Production	TSSOP (PW) | 28	50 | TUBE	Yes	NIPDAU	Level-1-260C-UNLIM	-40 to 85	430G2413
MSP430G2413IPW28R	Active	Production	TSSOP (PW) | 28	2000 | LARGE T&R	Yes	NIPDAU | NIPDAU	Level-1-260C-UNLIM	-40 to 85	430G2413
MSP430G2413IPW28R.A	Active	Production	TSSOP (PW) | 28	2000 | LARGE T&R	Yes	NIPDAU	Level-1-260C-UNLIM	-40 to 85	430G2413
MSP430G2413IPW28R.B	Active	Production	TSSOP (PW) | 28	2000 | LARGE T&R	Yes	NIPDAU	Level-1-260C-UNLIM	-40 to 85	430G2413
MSP430G2413IRHB32R	Active	Production	VQFN (RHB) | 32	3000 | LARGE T&R	Yes	NIPDAU	Level-2-260C-1 YEAR	-40 to 85	MSP430 G2413
MSP430G2413IRHB32R.A	Active	Production	VQFN (RHB) | 32	3000 | LARGE T&R	Yes	NIPDAU	Level-2-260C-1 YEAR	-40 to 85	MSP430 G2413

Orderable part number	Status (1)	Material type (2)	Package | Pins	Package qty | Carrier	RoHS (3)	Lead finish/ Ball material (4)	MSL rating/ Peak reflow (5)	Op temp (°C)	Part marking (6)
MSP430G2413IRHB32R.B	Active	Production	VQFN (RHB) | 32	3000 | LARGE T&R	Yes	NIPDAU	Level-2-260C-1 YEAR	-40 to 85	MSP430 G2413
MSP430G2413IRHB32T	Active	Production	VQFN (RHB) | 32	250 | SMALL T&R	Yes	NIPDAU	Level-2-260C-1 YEAR	-40 to 85	MSP430 G2413
MSP430G2413IRHB32T.A	Active	Production	VQFN (RHB) | 32	250 | SMALL T&R	Yes	NIPDAU	Level-2-260C-1 YEAR	-40 to 85	MSP430 G2413
MSP430G2413IRHB32T.B	Active	Production	VQFN (RHB) | 32	250 | SMALL T&R	Yes	NIPDAU	Level-2-260C-1 YEAR	-40 to 85	MSP430 G2413
MSP430G2453IN20	Active	Production	PDIP (N) | 20	20 | TUBE	Yes	NIPDAU	Level-1-260C-UNLIM	-40 to 85	M430G2453
MSP430G2453IN20.A	Active	Production	PDIP (N) | 20	20 | TUBE	Yes	NIPDAU	Level-1-260C-UNLIM	-40 to 85	M430G2453
MSP430G2453IN20.B	Active	Production	PDIP (N) | 20	20 | TUBE	Yes	NIPDAU	Level-1-260C-UNLIM	-40 to 85	M430G2453
MSP430G2453IPW20	Active	Production	TSSOP (PW) | 20	70 | TUBE	Yes	NIPDAU	Level-1-260C-UNLIM	-40 to 85	430G2453
MSP430G2453IPW20.A	Active	Production	TSSOP (PW) | 20	70 | TUBE	Yes	NIPDAU	Level-1-260C-UNLIM	-40 to 85	430G2453
MSP430G2453IPW20.B	Active	Production	TSSOP (PW) | 20	70 | TUBE	Yes	NIPDAU	Level-1-260C-UNLIM	-40 to 85	430G2453
MSP430G2453IPW20R	Active	Production	TSSOP (PW) | 20	2000 | LARGE T&R	Yes	NIPDAU	Level-1-260C-UNLIM	-40 to 85	430G2453
MSP430G2453IPW20R.A	Active	Production	TSSOP (PW) | 20	2000 | LARGE T&R	Yes	NIPDAU	Level-1-260C-UNLIM	-40 to 85	430G2453
MSP430G2453IPW20R.B	Active	Production	TSSOP (PW) | 20	2000 | LARGE T&R	Yes	NIPDAU	Level-1-260C-UNLIM	-40 to 85	430G2453
MSP430G2453IPW28	Active	Production	TSSOP (PW) | 28	50 | TUBE	Yes	NIPDAU | NIPDAU	Level-1-260C-UNLIM	-40 to 85	430G2453
MSP430G2453IPW28.A	Active	Production	TSSOP (PW) | 28	50 | TUBE	Yes	NIPDAU	Level-1-260C-UNLIM	-40 to 85	430G2453
MSP430G2453IPW28.B	Active	Production	TSSOP (PW) | 28	50 | TUBE	Yes	NIPDAU	Level-1-260C-UNLIM	-40 to 85	430G2453
MSP430G2453IPW28R	Active	Production	TSSOP (PW) | 28	2000 | LARGE T&R	Yes	NIPDAU | NIPDAU	Level-1-260C-UNLIM	-40 to 85	430G2453
MSP430G2453IPW28R.A	Active	Production	TSSOP (PW) | 28	2000 | LARGE T&R	Yes	NIPDAU	Level-1-260C-UNLIM	-40 to 85	430G2453
MSP430G2453IPW28R.B	Active	Production	TSSOP (PW) | 28	2000 | LARGE T&R	Yes	NIPDAU	Level-1-260C-UNLIM	-40 to 85	430G2453
MSP430G2453IRHB32R	Active	Production	VQFN (RHB) | 32	3000 | LARGE T&R	Yes	NIPDAU	Level-2-260C-1 YEAR	-40 to 85	MSP430 G2453
MSP430G2453IRHB32R.A	Active	Production	VQFN (RHB) | 32	3000 | LARGE T&R	Yes	NIPDAU	Level-2-260C-1 YEAR	-40 to 85	MSP430 G2453
MSP430G2453IRHB32R.B	Active	Production	VQFN (RHB) | 32	3000 | LARGE T&R	Yes	NIPDAU	Level-2-260C-1 YEAR	-40 to 85	MSP430 G2453
MSP430G2453IRHB32T	Active	Production	VQFN (RHB) | 32	250 | SMALL T&R	Yes	NIPDAU	Level-2-260C-1 YEAR	-40 to 85	MSP430 G2453
MSP430G2453IRHB32T.A	Active	Production	VQFN (RHB) | 32	250 | SMALL T&R	Yes	NIPDAU	Level-2-260C-1 YEAR	-40 to 85	MSP430 G2453

Orderable part number	Status (1)	Material type (2)	Package | Pins	Package qty | Carrier	RoHS (3)	Lead finish/ Ball material (4)	MSL rating/ Peak reflow (5)	Op temp (°C)	Part marking (6)
MSP430G2453IRHB32T.B	Active	Production	VQFN (RHB) | 32	250 | SMALL T&R	Yes	NIPDAU	Level-2-260C-1 YEAR	-40 to 85	MSP430 G2453
MSP430G2513IN20	Active	Production	PDIP (N) | 20	20 | TUBE	Yes	NIPDAU	Level-1-260C-UNLIM	-40 to 85	M430G2513
MSP430G2513IN20.A	Active	Production	PDIP (N) | 20	20 | TUBE	Yes	NIPDAU	Level-1-260C-UNLIM	-40 to 85	M430G2513
MSP430G2513IN20.B	Active	Production	PDIP (N) | 20	20 | TUBE	Yes	NIPDAU	Level-1-260C-UNLIM	-40 to 85	M430G2513
MSP430G2513IPW20	Active	Production	TSSOP (PW) | 20	70 | TUBE	Yes	NIPDAU	Level-1-260C-UNLIM	-40 to 85	430G2513
MSP430G2513IPW20.A	Active	Production	TSSOP (PW) | 20	70 | TUBE	Yes	NIPDAU	Level-1-260C-UNLIM	-40 to 85	430G2513
MSP430G2513IPW20.B	Active	Production	TSSOP (PW) | 20	70 | TUBE	Yes	NIPDAU	Level-1-260C-UNLIM	-40 to 85	430G2513
MSP430G2513IPW20R	Active	Production	TSSOP (PW) | 20	2000 | LARGE T&R	Yes	NIPDAU	Level-1-260C-UNLIM	-40 to 85	430G2513
MSP430G2513IPW20R.A	Active	Production	TSSOP (PW) | 20	2000 | LARGE T&R	Yes	NIPDAU	Level-1-260C-UNLIM	-40 to 85	430G2513
MSP430G2513IPW20R.B	Active	Production	TSSOP (PW) | 20	2000 | LARGE T&R	Yes	NIPDAU	Level-1-260C-UNLIM	-40 to 85	430G2513
MSP430G2513IPW28	Active	Production	TSSOP (PW) | 28	50 | TUBE	Yes	NIPDAU | NIPDAU	Level-1-260C-UNLIM	-40 to 85	430G2513
MSP430G2513IPW28.A	Active	Production	TSSOP (PW) | 28	50 | TUBE	Yes	NIPDAU	Level-1-260C-UNLIM	-40 to 85	430G2513
MSP430G2513IPW28.B	Active	Production	TSSOP (PW) | 28	50 | TUBE	Yes	NIPDAU	Level-1-260C-UNLIM	-40 to 85	430G2513
MSP430G2513IPW28R	Active	Production	TSSOP (PW) | 28	2000 | LARGE T&R	Yes	NIPDAU | NIPDAU	Level-1-260C-UNLIM	-40 to 85	430G2513
MSP430G2513IPW28R.A	Active	Production	TSSOP (PW) | 28	2000 | LARGE T&R	Yes	NIPDAU	Level-1-260C-UNLIM	-40 to 85	430G2513
MSP430G2513IPW28R.B	Active	Production	TSSOP (PW) | 28	2000 | LARGE T&R	Yes	NIPDAU	Level-1-260C-UNLIM	-40 to 85	430G2513
MSP430G2513IRHB32R	Active	Production	VQFN (RHB) | 32	3000 | LARGE T&R	Yes	NIPDAU	Level-2-260C-1 YEAR	-40 to 85	MSP430 G2513
MSP430G2513IRHB32R.A	Active	Production	VQFN (RHB) | 32	3000 | LARGE T&R	Yes	NIPDAU	Level-2-260C-1 YEAR	-40 to 85	MSP430 G2513
MSP430G2513IRHB32R.B	Active	Production	VQFN (RHB) | 32	3000 | LARGE T&R	Yes	NIPDAU	Level-2-260C-1 YEAR	-40 to 85	MSP430 G2513
MSP430G2513IRHB32T	Active	Production	VQFN (RHB) | 32	250 | SMALL T&R	Yes	NIPDAU	Level-2-260C-1 YEAR	-40 to 85	MSP430 G2513
MSP430G2513IRHB32T.A	Active	Production	VQFN (RHB) | 32	250 | SMALL T&R	Yes	NIPDAU	Level-2-260C-1 YEAR	-40 to 85	MSP430 G2513
MSP430G2513IRHB32T.B	Active	Production	VQFN (RHB) | 32	250 | SMALL T&R	Yes	NIPDAU	Level-2-260C-1 YEAR	-40 to 85	MSP430 G2513
MSP430G2553CY.A	Active	Production	DIESALE (Y) | 0	405 | NOT REQUIRED	Yes	Call TI	N/A for Pkg Type	0 to 70	
MSP430G2553CY.B	Active	Production	DIESALE (Y) | 0	405 | NOT REQUIRED	Yes	Call TI	N/A for Pkg Type	0 to 70	
MSP430G2553IN20	Active	Production	PDIP (N) | 20	20 | TUBE	Yes	NIPDAU	Level-1-260C-UNLIM	-40 to 85	M430G2553

Orderable part number	Status (1)	Material type (2)	Package | Pins	Package qty | Carrier	RoHS (3)	Lead finish/ Ball material (4)	MSL rating/ Peak reflow (5)	Op temp (°C)	Part marking (6)
MSP430G2553IN20.A	Active	Production	PDIP (N) | 20	20 | TUBE	Yes	NIPDAU	Level-1-260C-UNLIM	-40 to 85	M430G2553
MSP430G2553IN20.B	Active	Production	PDIP (N) | 20	20 | TUBE	Yes	NIPDAU	Level-1-260C-UNLIM	-40 to 85	M430G2553
MSP430G2553IPW20	Active	Production	TSSOP (PW) | 20	70 | TUBE	Yes	NIPDAU	Level-1-260C-UNLIM	-40 to 85	430G2553
MSP430G2553IPW20.A	Active	Production	TSSOP (PW) | 20	70 | TUBE	Yes	NIPDAU	Level-1-260C-UNLIM	-40 to 85	430G2553
MSP430G2553IPW20.B	Active	Production	TSSOP (PW) | 20	70 | TUBE	Yes	NIPDAU	Level-1-260C-UNLIM	-40 to 85	430G2553
MSP430G2553IPW20R	Active	Production	TSSOP (PW) | 20	2000 | LARGE T&R	Yes	NIPDAU	Level-1-260C-UNLIM	-40 to 85	430G2553
MSP430G2553IPW20R.A	Active	Production	TSSOP (PW) | 20	2000 | LARGE T&R	Yes	NIPDAU	Level-1-260C-UNLIM	-40 to 85	430G2553
MSP430G2553IPW20R.B	Active	Production	TSSOP (PW) | 20	2000 | LARGE T&R	Yes	NIPDAU	Level-1-260C-UNLIM	-40 to 85	430G2553
MSP430G2553IPW28	Active	Production	TSSOP (PW) | 28	50 | TUBE	Yes	NIPDAU | NIPDAU	Level-1-260C-UNLIM	-40 to 85	430G2553
MSP430G2553IPW28.A	Active	Production	TSSOP (PW) | 28	50 | TUBE	Yes	NIPDAU	Level-1-260C-UNLIM	-40 to 85	430G2553
MSP430G2553IPW28.B	Active	Production	TSSOP (PW) | 28	50 | TUBE	Yes	NIPDAU	Level-1-260C-UNLIM	-40 to 85	430G2553
MSP430G2553IPW28R	Active	Production	TSSOP (PW) | 28	2000 | LARGE T&R	Yes	NIPDAU | NIPDAU	Level-1-260C-UNLIM	-40 to 85	430G2553
MSP430G2553IPW28R.A	Active	Production	TSSOP (PW) | 28	2000 | LARGE T&R	Yes	NIPDAU	Level-1-260C-UNLIM	-40 to 85	430G2553
MSP430G2553IPW28R.B	Active	Production	TSSOP (PW) | 28	2000 | LARGE T&R	Yes	NIPDAU	Level-1-260C-UNLIM	-40 to 85	430G2553
MSP430G2553IRHB32R	Active	Production	VQFN (RHB) | 32	3000 | LARGE T&R	Yes	NIPDAU	Level-2-260C-1 YEAR	-40 to 85	MSP430 G2553
MSP430G2553IRHB32R.A	Active	Production	VQFN (RHB) | 32	3000 | LARGE T&R	Yes	NIPDAU	Level-2-260C-1 YEAR	-40 to 85	MSP430 G2553
MSP430G2553IRHB32R.B	Active	Production	VQFN (RHB) | 32	3000 | LARGE T&R	Yes	NIPDAU	Level-2-260C-1 YEAR	-40 to 85	MSP430 G2553
MSP430G2553IRHB32T	Active	Production	VQFN (RHB) | 32	250 | SMALL T&R	Yes	NIPDAU	Level-2-260C-1 YEAR	-40 to 85	MSP430 G2553
MSP430G2553IRHB32T.A	Active	Production	VQFN (RHB) | 32	250 | SMALL T&R	Yes	NIPDAU	Level-2-260C-1 YEAR	-40 to 85	MSP430 G2553
MSP430G2553IRHB32T.B	Active	Production	VQFN (RHB) | 32	250 | SMALL T&R	Yes	NIPDAU	Level-2-260C-1 YEAR	-40 to 85	MSP430 G2553

(1) **Status:** For more details on status, see our product life cycle.

(2) **Material type:** When designated, preproduction parts are prototypes/experimental devices, and are not yet approved or released for full production. Testing and final process, including without limitation quality assurance, reliability performance testing, and/or process qualification, may not yet be complete, and this item is subject to further changes or possible discontinuation. If available for ordering, purchases will be subject to an additional waiver at checkout, and are intended for early internal evaluation purposes only. These items are sold without warranties of any kind.

(3) **RoHS values:** Yes, No, RoHS Exempt. See the TI RoHS Statement for additional information and value definition.

(4) **Lead finish/Ball material:** Parts may have multiple material finish options. Finish options are separated by a vertical ruled line. Lead finish/Ball material values may wrap to two lines if the finish value exceeds the maximum column width.

(5) **MSL rating/Peak reflow:** The moisture sensitivity level ratings and peak solder (reflow) temperatures. In the event that a part has multiple moisture sensitivity ratings, only the lowest level per JEDEC standards is shown. Refer to the shipping label for the actual reflow temperature that will be used to mount the part to the printed circuit board.

(6) **Part marking:** There may be an additional marking, which relates to the logo, the lot trace code information, or the environmental category of the part.

Multiple part markings will be inside parentheses. Only one part marking contained in parentheses and separated by a "~" will appear on a part. If a line is indented then it is a continuation of the previous line and the two combined represent the entire part marking for that device.

Important Information and Disclaimer: The information provided on this page represents TI's knowledge and belief as of the date that it is provided. TI bases its knowledge and belief on information provided by third parties, and makes no representation or warranty as to the accuracy of such information. Efforts are underway to better integrate information from third parties. TI has taken and continues to take reasonable steps to provide representative and accurate information but may not have conducted destructive testing or chemical analysis on incoming materials and chemicals. TI and TI suppliers consider certain information to be proprietary, and thus CAS numbers and other limited information may not be available for release.

In no event shall TI's liability arising out of such information exceed the total purchase price of the TI part(s) at issue in this document sold by TI to Customer on an annual basis.

OTHER QUALIFIED VERSIONS OF MSP430G2453, MSP430G2553 :

- Automotive : MSP430G2453-Q1, MSP430G2553-Q1

NOTE: Qualified Version Definitions:

- Automotive - Q100 devices qualified for high-reliability automotive applications targeting zero defects

TAPE AND REEL INFORMATION

REEL DIMENSIONS

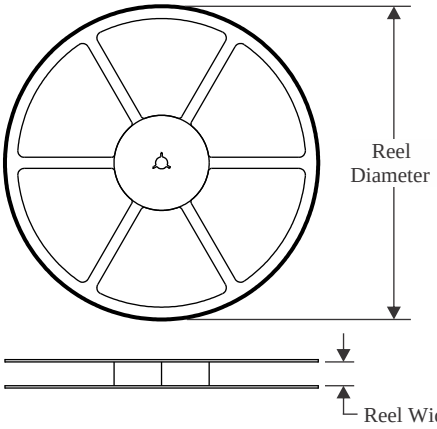

TAPE DIMENSIONS

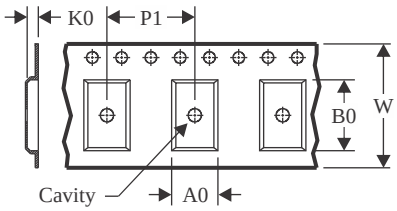

A0	Dimension designed to accommodate the component width
B0	Dimension designed to accommodate the component length
K0	Dimension designed to accommodate the component thickness
W	Overall width of the carrier tape
P1	Pitch between successive cavity centers

QUADRANT ASSIGNMENTS FOR PIN 1 ORIENTATION IN TAPE

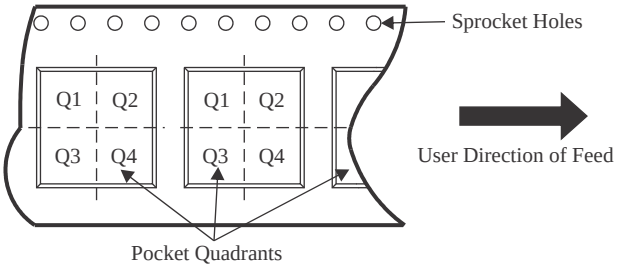

*All dimensions are nominal

Device	Package Type	Package Drawing	Pins	SPQ	Reel Diameter (mm)	Reel Width W1 (mm)	A0 (mm)	B0 (mm)	K0 (mm)	P1 (mm)	W (mm)	Pin1 Quadrant
M430G2553IPW28RG4	TSSOP	PW	28	2000	330.0	16.4	6.75	10.1	1.8	12.0	16.0	Q1
M430G2553IRHB32RG4	VQFN	RHB	32	3000	330.0	12.4	5.3	5.3	1.1	8.0	12.0	Q2
MSP430G2153IPW20R	TSSOP	PW	20	2000	330.0	16.4	6.95	7.1	1.6	8.0	16.0	Q1
MSP430G2153IPW28R	TSSOP	PW	28	2000	330.0	16.4	6.75	10.1	1.8	12.0	16.0	Q1
MSP430G2153IRHB32R	VQFN	RHB	32	3000	330.0	12.4	5.3	5.3	1.1	8.0	12.0	Q2
MSP430G2153IRHB32T	VQFN	RHB	32	250	180.0	12.4	5.3	5.3	1.1	8.0	12.0	Q2
MSP430G2213IPW20R	TSSOP	PW	20	2000	330.0	16.4	6.95	7.0	1.4	8.0	16.0	Q1
MSP430G2213IRHB32R	VQFN	RHB	32	3000	330.0	12.4	5.3	5.3	1.1	8.0	12.0	Q2
MSP430G2213IRHB32T	VQFN	RHB	32	250	180.0	12.4	5.3	5.3	1.1	8.0	12.0	Q2
MSP430G2253IPW20R	TSSOP	PW	20	2000	330.0	16.4	6.95	7.1	1.6	8.0	16.0	Q1
MSP430G2253IPW28R	TSSOP	PW	28	2000	330.0	16.4	6.75	10.1	1.8	12.0	16.0	Q1
MSP430G2253IRHB32R	VQFN	RHB	32	3000	330.0	12.4	5.3	5.3	1.1	8.0	12.0	Q2
MSP430G2253IRHB32T	VQFN	RHB	32	250	180.0	12.4	5.3	5.3	1.1	8.0	12.0	Q2
MSP430G2313IPW20R	TSSOP	PW	20	2000	330.0	16.4	6.95	7.1	1.6	8.0	16.0	Q1
MSP430G2313IRHB32R	VQFN	RHB	32	3000	330.0	12.4	5.3	5.3	1.1	8.0	12.0	Q2
MSP430G2313IRHB32T	VQFN	RHB	32	250	180.0	12.4	5.3	5.3	1.1	8.0	12.0	Q2

Device	Package Type	Package Drawing	Pins	SPQ	Reel Diameter (mm)	Reel Width W1 (mm)	A0 (mm)	B0 (mm)	K0 (mm)	P1 (mm)	W (mm)	Pin1 Quadrant
MSP430G2353IPW20R	TSSOP	PW	20	2000	330.0	16.4	6.95	7.1	1.6	8.0	16.0	Q1
MSP430G2353IPW28R	TSSOP	PW	28	2000	330.0	16.4	6.75	10.1	1.8	12.0	16.0	Q1
MSP430G2353IRHB32R	VQFN	RHB	32	3000	330.0	12.4	5.3	5.3	1.1	8.0	12.0	Q2
MSP430G2353IRHB32T	VQFN	RHB	32	250	180.0	12.4	5.3	5.3	1.1	8.0	12.0	Q2
MSP430G2413IPW20R	TSSOP	PW	20	2000	330.0	16.4	6.95	7.1	1.6	8.0	16.0	Q1
MSP430G2413IPW28R	TSSOP	PW	28	2000	330.0	16.4	6.75	10.1	1.8	12.0	16.0	Q1
MSP430G2413IRHB32R	VQFN	RHB	32	3000	330.0	12.4	5.3	5.3	1.1	8.0	12.0	Q2
MSP430G2413IRHB32R	VQFN	RHB	32	3000	330.0	12.4	5.3	5.3	1.1	8.0	12.0	Q2
MSP430G2413IRHB32T	VQFN	RHB	32	250	180.0	12.4	5.3	5.3	1.1	8.0	12.0	Q2
MSP430G2453IPW20R	TSSOP	PW	20	2000	330.0	16.4	6.95	7.1	1.6	8.0	16.0	Q1
MSP430G2453IPW28R	TSSOP	PW	28	2000	330.0	16.4	6.75	10.1	1.8	12.0	16.0	Q1
MSP430G2453IRHB32R	VQFN	RHB	32	3000	330.0	12.4	5.3	5.3	1.1	8.0	12.0	Q2
MSP430G2453IRHB32T	VQFN	RHB	32	250	180.0	12.4	5.3	5.3	1.1	8.0	12.0	Q2
MSP430G2513IPW20R	TSSOP	PW	20	2000	330.0	16.4	6.95	7.1	1.6	8.0	16.0	Q1
MSP430G2513IPW28R	TSSOP	PW	28	2000	330.0	16.4	6.75	10.1	1.8	12.0	16.0	Q1
MSP430G2513IRHB32R	VQFN	RHB	32	3000	330.0	12.4	5.3	5.3	1.1	8.0	12.0	Q2
MSP430G2513IRHB32T	VQFN	RHB	32	250	180.0	12.4	5.3	5.3	1.1	8.0	12.0	Q2
MSP430G2553IPW20R	TSSOP	PW	20	2000	330.0	16.4	6.95	7.0	1.4	8.0	16.0	Q1
MSP430G2553IPW28R	TSSOP	PW	28	2000	330.0	16.4	6.75	10.1	1.8	12.0	16.0	Q1
MSP430G2553IRHB32R	VQFN	RHB	32	3000	330.0	12.4	5.3	5.3	1.1	8.0	12.0	Q2
MSP430G2553IRHB32R	VQFN	RHB	32	3000	330.0	12.4	5.3	5.3	1.1	8.0	12.0	Q2
MSP430G2553IRHB32T	VQFN	RHB	32	250	180.0	12.4	5.3	5.3	1.1	8.0	12.0	Q2

TAPE AND REEL BOX DIMENSIONS

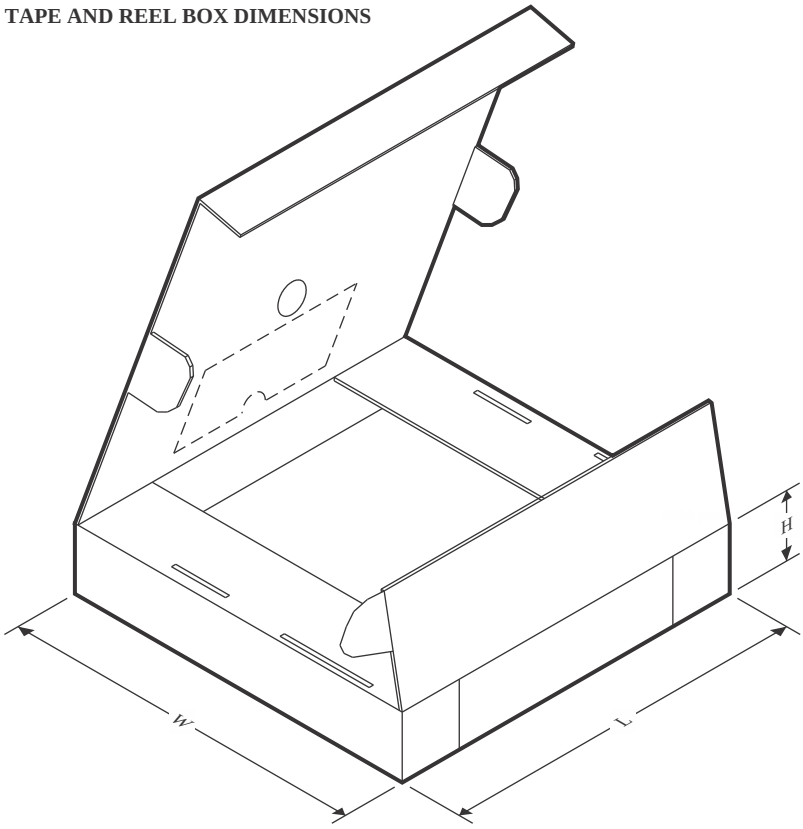

*All dimensions are nominal

Device	Package Type	Package Drawing	Pins	SPQ	Length (mm)	Width (mm)	Height (mm)
M430G2553IPW28RG4	TSSOP	PW	28	2000	356.0	356.0	35.0
M430G2553IRHB32RG4	VQFN	RHB	32	3000	367.0	367.0	35.0
MSP430G2153IPW20R	TSSOP	PW	20	2000	356.0	356.0	35.0
MSP430G2153IPW28R	TSSOP	PW	28	2000	356.0	356.0	35.0
MSP430G2153IRHB32R	VQFN	RHB	32	3000	367.0	367.0	35.0
MSP430G2153IRHB32T	VQFN	RHB	32	250	210.0	185.0	35.0
MSP430G2213IPW20R	TSSOP	PW	20	2000	356.0	356.0	35.0
MSP430G2213IRHB32R	VQFN	RHB	32	3000	367.0	367.0	35.0
MSP430G2213IRHB32T	VQFN	RHB	32	250	210.0	185.0	35.0
MSP430G2253IPW20R	TSSOP	PW	20	2000	356.0	356.0	35.0
MSP430G2253IPW28R	TSSOP	PW	28	2000	356.0	356.0	35.0
MSP430G2253IRHB32R	VQFN	RHB	32	3000	367.0	367.0	35.0
MSP430G2253IRHB32T	VQFN	RHB	32	250	210.0	185.0	35.0
MSP430G2313IPW20R	TSSOP	PW	20	2000	356.0	356.0	35.0
MSP430G2313IRHB32R	VQFN	RHB	32	3000	367.0	367.0	35.0
MSP430G2313IRHB32T	VQFN	RHB	32	250	210.0	185.0	35.0
MSP430G2353IPW20R	TSSOP	PW	20	2000	356.0	356.0	35.0
MSP430G2353IPW28R	TSSOP	PW	28	2000	356.0	356.0	35.0

Device	Package Type	Package Drawing	Pins	SPQ	Length (mm)	Width (mm)	Height (mm)
MSP430G2353IRHB32R	VQFN	RHB	32	3000	367.0	367.0	35.0
MSP430G2353IRHB32T	VQFN	RHB	32	250	210.0	185.0	35.0
MSP430G2413IPW20R	TSSOP	PW	20	2000	356.0	356.0	35.0
MSP430G2413IPW28R	TSSOP	PW	28	2000	356.0	356.0	35.0
MSP430G2413IRHB32R	VQFN	RHB	32	3000	367.0	367.0	35.0
MSP430G2413IRHB32R	VQFN	RHB	32	3000	367.0	367.0	35.0
MSP430G2413IRHB32T	VQFN	RHB	32	250	210.0	185.0	35.0
MSP430G2453IPW20R	TSSOP	PW	20	2000	356.0	356.0	35.0
MSP430G2453IPW28R	TSSOP	PW	28	2000	356.0	356.0	35.0
MSP430G2453IRHB32R	VQFN	RHB	32	3000	367.0	367.0	35.0
MSP430G2453IRHB32T	VQFN	RHB	32	250	210.0	185.0	35.0
MSP430G2513IPW20R	TSSOP	PW	20	2000	356.0	356.0	35.0
MSP430G2513IPW28R	TSSOP	PW	28	2000	356.0	356.0	35.0
MSP430G2513IRHB32R	VQFN	RHB	32	3000	367.0	367.0	35.0
MSP430G2513IRHB32T	VQFN	RHB	32	250	210.0	185.0	35.0
MSP430G2553IPW20R	TSSOP	PW	20	2000	356.0	356.0	35.0
MSP430G2553IPW28R	TSSOP	PW	28	2000	356.0	356.0	35.0
MSP430G2553IRHB32R	VQFN	RHB	32	3000	367.0	367.0	35.0
MSP430G2553IRHB32R	VQFN	RHB	32	3000	367.0	367.0	35.0
MSP430G2553IRHB32T	VQFN	RHB	32	250	210.0	185.0	35.0

TUBE

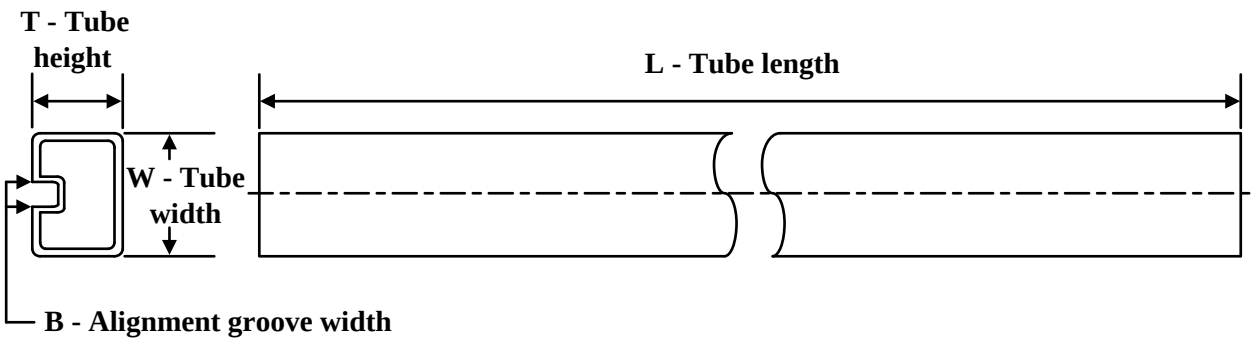

*All dimensions are nominal

Device	Package Name	Package Type	Pins	SPQ	L (mm)	W (mm)	T (µm)	B (mm)
MSP430G2153IN20	N	PDIP	20	20	506	13.97	11230	4.32
MSP430G2153IN20.A	N	PDIP	20	20	506	13.97	11230	4.32
MSP430G2153IN20.B	N	PDIP	20	20	506	13.97	11230	4.32
MSP430G2153IPW20	PW	TSSOP	20	70	530	10.2	3600	3.5
MSP430G2153IPW20	PW	TSSOP	20	70	530	10.2	3600	3.5
MSP430G2153IPW20.A	PW	TSSOP	20	70	530	10.2	3600	3.5
MSP430G2153IPW20.A	PW	TSSOP	20	70	530	10.2	3600	3.5
MSP430G2153IPW20.B	PW	TSSOP	20	70	530	10.2	3600	3.5
MSP430G2153IPW20.B	PW	TSSOP	20	70	530	10.2	3600	3.5
MSP430G2153IPW28	PW	TSSOP	28	50	530	10.2	3600	3.5
MSP430G2153IPW28	PW	TSSOP	28	50	530	10.2	3600	3.5
MSP430G2153IPW28.A	PW	TSSOP	28	50	530	10.2	3600	3.5
MSP430G2153IPW28.A	PW	TSSOP	28	50	530	10.2	3600	3.5
MSP430G2153IPW28.B	PW	TSSOP	28	50	530	10.2	3600	3.5
MSP430G2153IPW28.B	PW	TSSOP	28	50	530	10.2	3600	3.5
MSP430G2213IN20	N	PDIP	20	20	506	13.97	11230	4.32
MSP430G2213IN20.A	N	PDIP	20	20	506	13.97	11230	4.32
MSP430G2213IN20.B	N	PDIP	20	20	506	13.97	11230	4.32
MSP430G2213IPW20	PW	TSSOP	20	70	530	10.2	3600	3.5
MSP430G2213IPW20	PW	TSSOP	20	70	530	10.2	3600	3.5
MSP430G2213IPW20.A	PW	TSSOP	20	70	530	10.2	3600	3.5
MSP430G2213IPW20.A	PW	TSSOP	20	70	530	10.2	3600	3.5
MSP430G2213IPW20.B	PW	TSSOP	20	70	530	10.2	3600	3.5
MSP430G2213IPW20.B	PW	TSSOP	20	70	530	10.2	3600	3.5
MSP430G2213IPW28	PW	TSSOP	28	50	530	10.2	3600	3.5
MSP430G2213IPW28	PW	TSSOP	28	50	530	10.2	3600	3.5
MSP430G2213IPW28.A	PW	TSSOP	28	50	530	10.2	3600	3.5
MSP430G2213IPW28.A	PW	TSSOP	28	50	530	10.2	3600	3.5
MSP430G2213IPW28.B	PW	TSSOP	28	50	530	10.2	3600	3.5

Device	Package Name	Package Type	Pins	SPQ	L (mm)	W (mm)	T (µm)	B (mm)
MSP430G2213IPW28.B	PW	TSSOP	28	50	530	10.2	3600	3.5
MSP430G2253IN20	N	PDIP	20	20	506	13.97	11230	4.32
MSP430G2253IN20.A	N	PDIP	20	20	506	13.97	11230	4.32
MSP430G2253IN20.B	N	PDIP	20	20	506	13.97	11230	4.32
MSP430G2253IPW20	PW	TSSOP	20	70	530	10.2	3600	3.5
MSP430G2253IPW20	PW	TSSOP	20	70	530	10.2	3600	3.5
MSP430G2253IPW20.A	PW	TSSOP	20	70	530	10.2	3600	3.5
MSP430G2253IPW20.A	PW	TSSOP	20	70	530	10.2	3600	3.5
MSP430G2253IPW20.B	PW	TSSOP	20	70	530	10.2	3600	3.5
MSP430G2253IPW20.B	PW	TSSOP	20	70	530	10.2	3600	3.5
MSP430G2253IPW28	PW	TSSOP	28	50	530	10.2	3600	3.5
MSP430G2253IPW28	PW	TSSOP	28	50	530	10.2	3600	3.5
MSP430G2253IPW28.A	PW	TSSOP	28	50	530	10.2	3600	3.5
MSP430G2253IPW28.A	PW	TSSOP	28	50	530	10.2	3600	3.5
MSP430G2253IPW28.B	PW	TSSOP	28	50	530	10.2	3600	3.5
MSP430G2253IPW28.B	PW	TSSOP	28	50	530	10.2	3600	3.5
MSP430G2313IN20	N	PDIP	20	20	506	13.97	11230	4.32
MSP430G2313IN20.A	N	PDIP	20	20	506	13.97	11230	4.32
MSP430G2313IN20.B	N	PDIP	20	20	506	13.97	11230	4.32
MSP430G2313IPW20	PW	TSSOP	20	70	530	10.2	3600	3.5
MSP430G2313IPW20	PW	TSSOP	20	70	530	10.2	3600	3.5
MSP430G2313IPW20.A	PW	TSSOP	20	70	530	10.2	3600	3.5
MSP430G2313IPW20.A	PW	TSSOP	20	70	530	10.2	3600	3.5
MSP430G2313IPW20.B	PW	TSSOP	20	70	530	10.2	3600	3.5
MSP430G2313IPW20.B	PW	TSSOP	20	70	530	10.2	3600	3.5
MSP430G2313IPW28	PW	TSSOP	28	50	530	10.2	3600	3.5
MSP430G2313IPW28	PW	TSSOP	28	50	530	10.2	3600	3.5
MSP430G2313IPW28.A	PW	TSSOP	28	50	530	10.2	3600	3.5
MSP430G2313IPW28.A	PW	TSSOP	28	50	530	10.2	3600	3.5
MSP430G2313IPW28.B	PW	TSSOP	28	50	530	10.2	3600	3.5
MSP430G2313IPW28.B	PW	TSSOP	28	50	530	10.2	3600	3.5
MSP430G2353IN20	N	PDIP	20	20	506	13.97	11230	4.32
MSP430G2353IN20.A	N	PDIP	20	20	506	13.97	11230	4.32
MSP430G2353IN20.B	N	PDIP	20	20	506	13.97	11230	4.32
MSP430G2353IPW20	PW	TSSOP	20	70	530	10.2	3600	3.5
MSP430G2353IPW20	PW	TSSOP	20	70	530	10.2	3600	3.5
MSP430G2353IPW20.A	PW	TSSOP	20	70	530	10.2	3600	3.5
MSP430G2353IPW20.A	PW	TSSOP	20	70	530	10.2	3600	3.5
MSP430G2353IPW20.B	PW	TSSOP	20	70	530	10.2	3600	3.5
MSP430G2353IPW20.B	PW	TSSOP	20	70	530	10.2	3600	3.5
MSP430G2353IPW28	PW	TSSOP	28	50	530	10.2	3600	3.5
MSP430G2353IPW28	PW	TSSOP	28	50	530	10.2	3600	3.5
MSP430G2353IPW28.A	PW	TSSOP	28	50	530	10.2	3600	3.5

Device	Package Name	Package Type	Pins	SPQ	L (mm)	W (mm)	T (µm)	B (mm)
MSP430G2353IPW28.A	PW	TSSOP	28	50	530	10.2	3600	3.5
MSP430G2353IPW28.B	PW	TSSOP	28	50	530	10.2	3600	3.5
MSP430G2353IPW28.B	PW	TSSOP	28	50	530	10.2	3600	3.5
MSP430G2413IN20	N	PDIP	20	20	506	13.97	11230	4.32
MSP430G2413IN20.A	N	PDIP	20	20	506	13.97	11230	4.32
MSP430G2413IN20.B	N	PDIP	20	20	506	13.97	11230	4.32
MSP430G2413IPW20	PW	TSSOP	20	70	530	10.2	3600	3.5
MSP430G2413IPW20	PW	TSSOP	20	70	530	10.2	3600	3.5
MSP430G2413IPW20.A	PW	TSSOP	20	70	530	10.2	3600	3.5
MSP430G2413IPW20.A	PW	TSSOP	20	70	530	10.2	3600	3.5
MSP430G2413IPW20.B	PW	TSSOP	20	70	530	10.2	3600	3.5
MSP430G2413IPW20.B	PW	TSSOP	20	70	530	10.2	3600	3.5
MSP430G2413IPW28	PW	TSSOP	28	50	530	10.2	3600	3.5
MSP430G2413IPW28	PW	TSSOP	28	50	530	10.2	3600	3.5
MSP430G2413IPW28.A	PW	TSSOP	28	50	530	10.2	3600	3.5
MSP430G2413IPW28.A	PW	TSSOP	28	50	530	10.2	3600	3.5
MSP430G2413IPW28.B	PW	TSSOP	28	50	530	10.2	3600	3.5
MSP430G2413IPW28.B	PW	TSSOP	28	50	530	10.2	3600	3.5
MSP430G2453IN20	N	PDIP	20	20	506	13.97	11230	4.32
MSP430G2453IN20.A	N	PDIP	20	20	506	13.97	11230	4.32
MSP430G2453IN20.B	N	PDIP	20	20	506	13.97	11230	4.32
MSP430G2453IPW20	PW	TSSOP	20	70	530	10.2	3600	3.5
MSP430G2453IPW20	PW	TSSOP	20	70	530	10.2	3600	3.5
MSP430G2453IPW20.A	PW	TSSOP	20	70	530	10.2	3600	3.5
MSP430G2453IPW20.A	PW	TSSOP	20	70	530	10.2	3600	3.5
MSP430G2453IPW20.B	PW	TSSOP	20	70	530	10.2	3600	3.5
MSP430G2453IPW20.B	PW	TSSOP	20	70	530	10.2	3600	3.5
MSP430G2453IPW28	PW	TSSOP	28	50	530	10.2	3600	3.5
MSP430G2453IPW28	PW	TSSOP	28	50	530	10.2	3600	3.5
MSP430G2453IPW28.A	PW	TSSOP	28	50	530	10.2	3600	3.5
MSP430G2453IPW28.A	PW	TSSOP	28	50	530	10.2	3600	3.5
MSP430G2453IPW28.B	PW	TSSOP	28	50	530	10.2	3600	3.5
MSP430G2453IPW28.B	PW	TSSOP	28	50	530	10.2	3600	3.5
MSP430G2513IN20	N	PDIP	20	20	506	13.97	11230	4.32
MSP430G2513IN20.A	N	PDIP	20	20	506	13.97	11230	4.32
MSP430G2513IN20.B	N	PDIP	20	20	506	13.97	11230	4.32
MSP430G2513IPW20	PW	TSSOP	20	70	530	10.2	3600	3.5
MSP430G2513IPW20	PW	TSSOP	20	70	530	10.2	3600	3.5
MSP430G2513IPW20.A	PW	TSSOP	20	70	530	10.2	3600	3.5
MSP430G2513IPW20.A	PW	TSSOP	20	70	530	10.2	3600	3.5
MSP430G2513IPW20.B	PW	TSSOP	20	70	530	10.2	3600	3.5
MSP430G2513IPW20.B	PW	TSSOP	20	70	530	10.2	3600	3.5
MSP430G2513IPW28	PW	TSSOP	28	50	530	10.2	3600	3.5

Device	Package Name	Package Type	Pins	SPQ	L (mm)	W (mm)	T (µm)	B (mm)
MSP430G2513IPW28	PW	TSSOP	28	50	530	10.2	3600	3.5
MSP430G2513IPW28.A	PW	TSSOP	28	50	530	10.2	3600	3.5
MSP430G2513IPW28.A	PW	TSSOP	28	50	530	10.2	3600	3.5
MSP430G2513IPW28.B	PW	TSSOP	28	50	530	10.2	3600	3.5
MSP430G2513IPW28.B	PW	TSSOP	28	50	530	10.2	3600	3.5
MSP430G2553IN20	N	PDIP	20	20	506	13.97	11230	4.32
MSP430G2553IN20.A	N	PDIP	20	20	506	13.97	11230	4.32
MSP430G2553IN20.B	N	PDIP	20	20	506	13.97	11230	4.32
MSP430G2553IPW20	PW	TSSOP	20	70	530	10.2	3600	3.5
MSP430G2553IPW20	PW	TSSOP	20	70	530	10.2	3600	3.5
MSP430G2553IPW20.A	PW	TSSOP	20	70	530	10.2	3600	3.5
MSP430G2553IPW20.A	PW	TSSOP	20	70	530	10.2	3600	3.5
MSP430G2553IPW20.B	PW	TSSOP	20	70	530	10.2	3600	3.5
MSP430G2553IPW20.B	PW	TSSOP	20	70	530	10.2	3600	3.5
MSP430G2553IPW28	PW	TSSOP	28	50	530	10.2	3600	3.5
MSP430G2553IPW28	PW	TSSOP	28	50	530	10.2	3600	3.5
MSP430G2553IPW28.A	PW	TSSOP	28	50	530	10.2	3600	3.5
MSP430G2553IPW28.A	PW	TSSOP	28	50	530	10.2	3600	3.5
MSP430G2553IPW28.B	PW	TSSOP	28	50	530	10.2	3600	3.5
MSP430G2553IPW28.B	PW	TSSOP	28	50	530	10.2	3600	3.5

N (R–PDIP–T**) PLASTIC DUAL–IN–LINE PACKAGE

16 PINS SHOWN

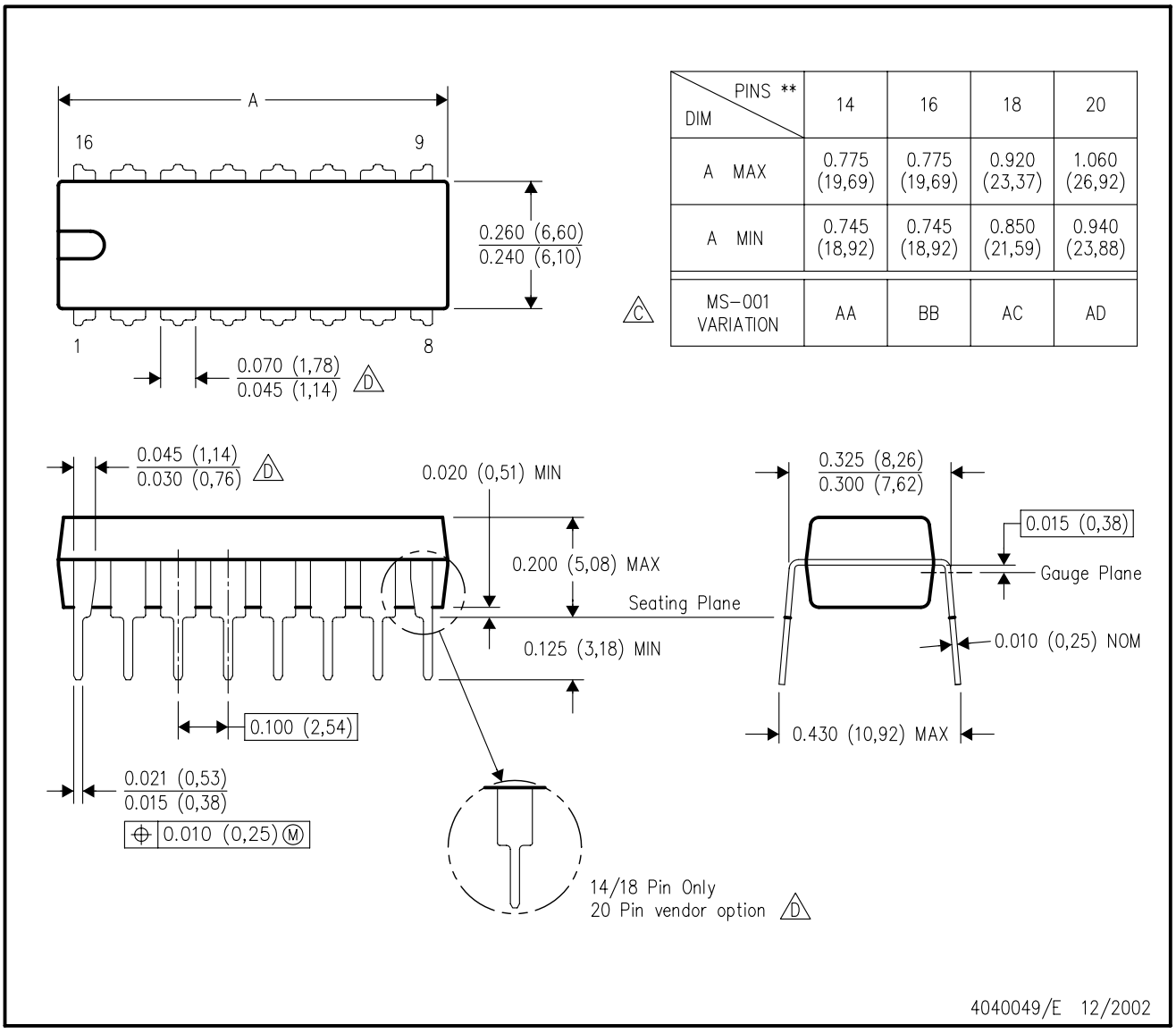

DIM \ PINS **	14	16	18	20
A MAX	0.775 (19,69)	0.775 (19,69)	0.920 (23,37)	1.060 (26,92)
A MIN	0.745 (18,92)	0.745 (18,92)	0.850 (21,59)	0.940 (23,88)
MS–001 VARIATION (C)	AA	BB	AC	AD

NOTES:
A. All linear dimensions are in inches (millimeters).
B. This drawing is subject to change without notice.
C. Falls within JEDEC MS–001, except 18 and 20 pin minimum body length (Dim A).
D. The 20 pin end lead shoulder width is a vendor option, either half or full width.

PW (R-PDSO-G28) PLASTIC SMALL OUTLINE

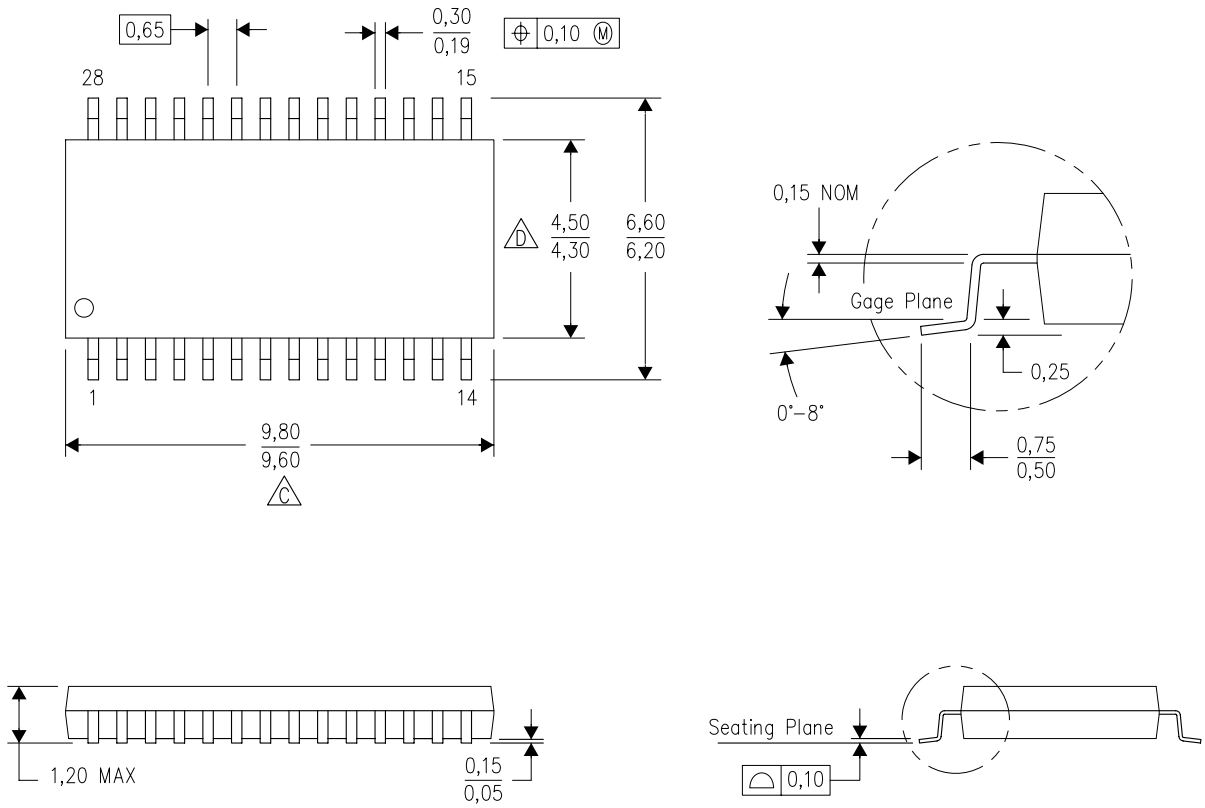

NOTES:
A. All linear dimensions are in millimeters. Dimensioning and tolerancing per ASME Y14.5M–1994.
B. This drawing is subject to change without notice.
C. Body length does not include mold flash, protrusions, or gate burrs. Mold flash, protrusions, or gate burrs shall not exceed 0,15 each side.
D. Body width does not include interlead flash. Interlead flash shall not exceed 0,25 each side.
E. Falls within JEDEC MO-153

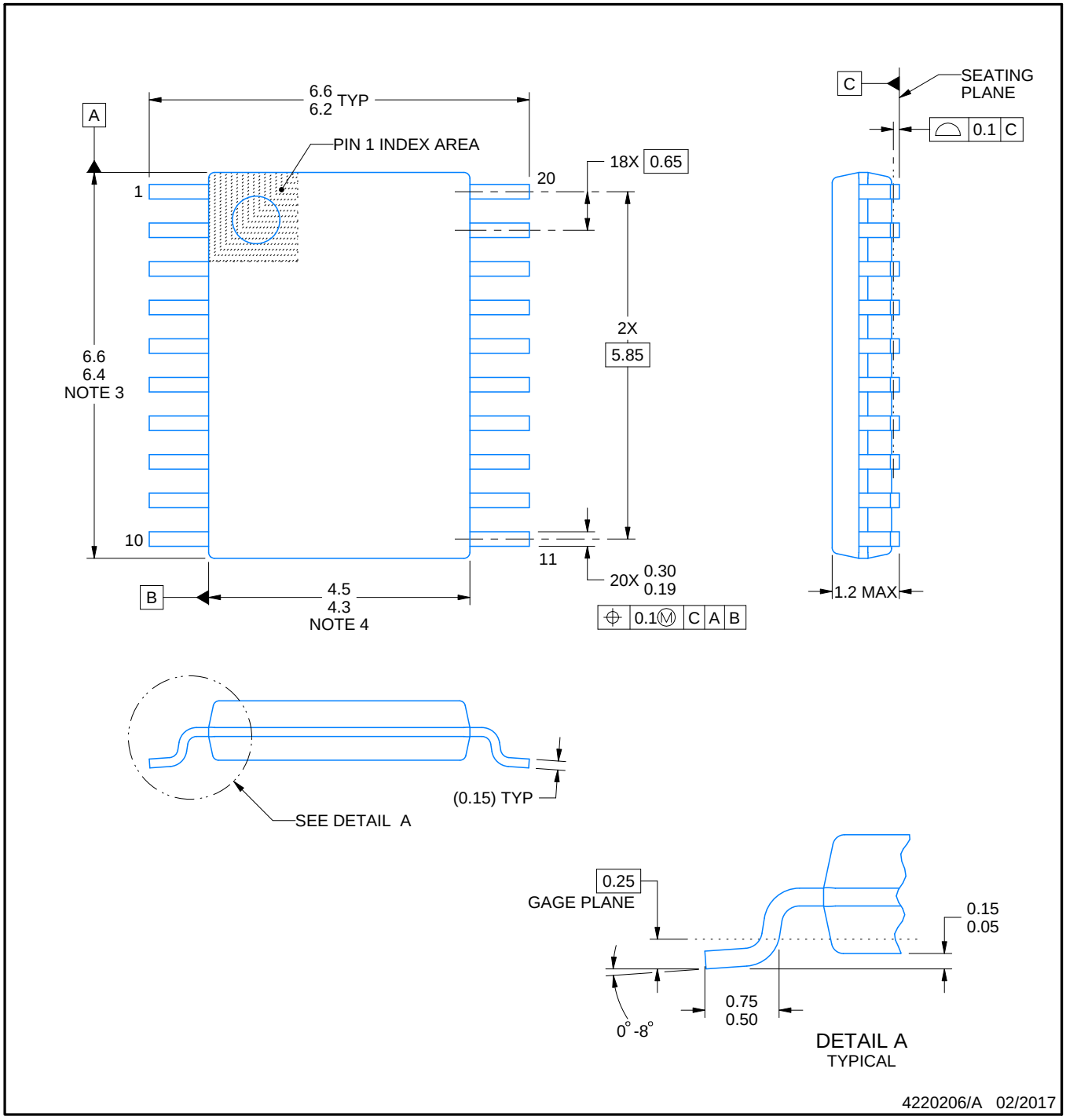

NOTES:

1. All linear dimensions are in millimeters. Any dimensions in parenthesis are for reference only. Dimensioning and tolerancing per ASME Y14.5M.
2. This drawing is subject to change without notice.
3. This dimension does not include mold flash, protrusions, or gate burrs. Mold flash, protrusions, or gate burrs shall not exceed 0.15 mm per side.
4. This dimension does not include interlead flash. Interlead flash shall not exceed 0.25 mm per side.
5. Reference JEDEC registration MO-153.

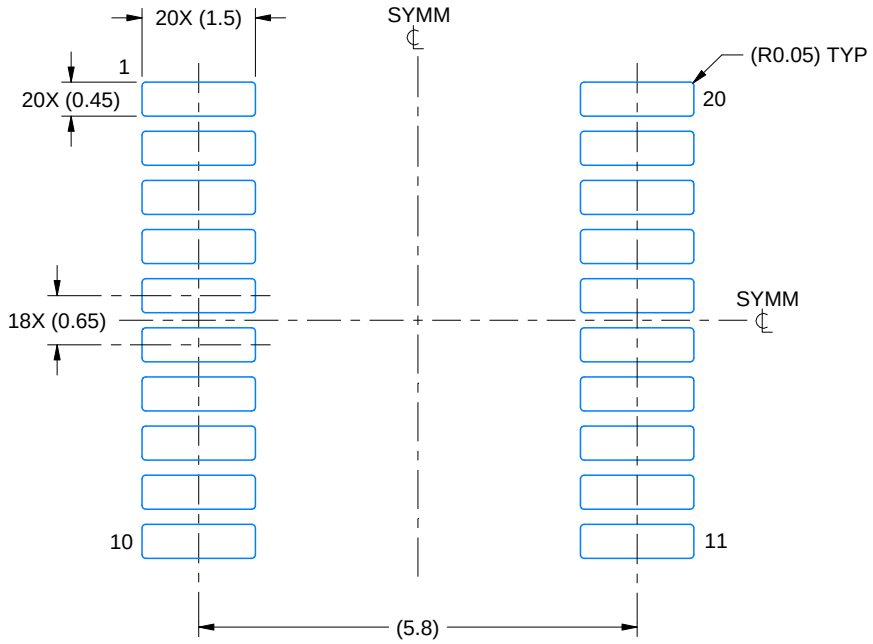

LAND PATTERN EXAMPLE
EXPOSED METAL SHOWN
SCALE: 10X

NON-SOLDER MASK DEFINED (PREFERRED)

SOLDER MASK DEFINED

SOLDER MASK DETAILS

4220206/A 02/2017

NOTES: (continued)

6. Publication IPC-7351 may have alternate designs.
7. Solder mask tolerances between and around signal pads can vary based on board fabrication site.

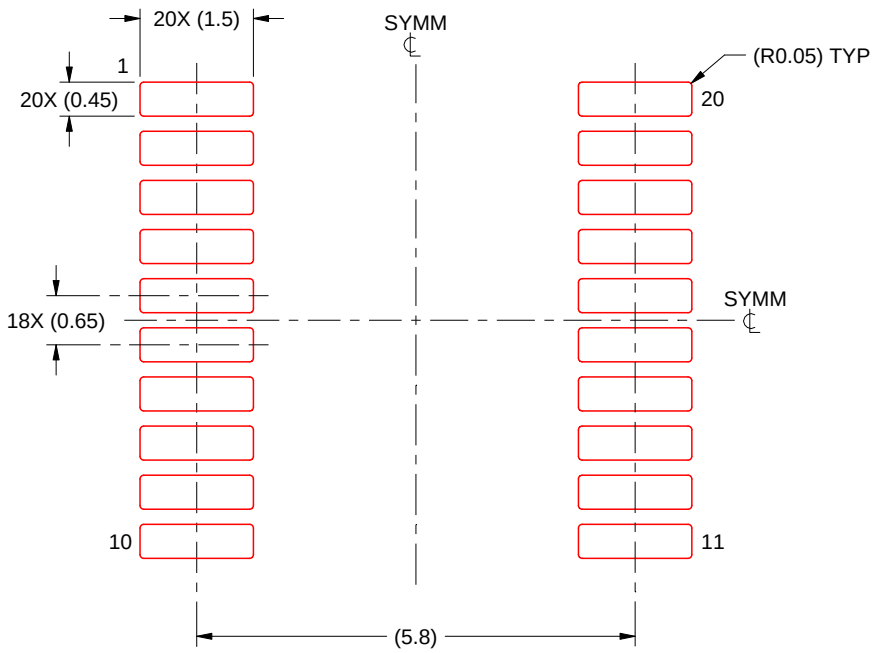

SOLDER PASTE EXAMPLE
BASED ON 0.125 mm THICK STENCIL
SCALE: 10X

4220206/A 02/2017

NOTES: (continued)

8. Laser cutting apertures with trapezoidal walls and rounded corners may offer better paste release. IPC-7525 may have alternate design recommendations.
9. Board assembly site may have different recommendations for stencil design.

GENERIC PACKAGE VIEW

RHB 32

VQFN - 1 mm max height

5 x 5, 0.5 mm pitch

PLASTIC QUAD FLATPACK - NO LEAD

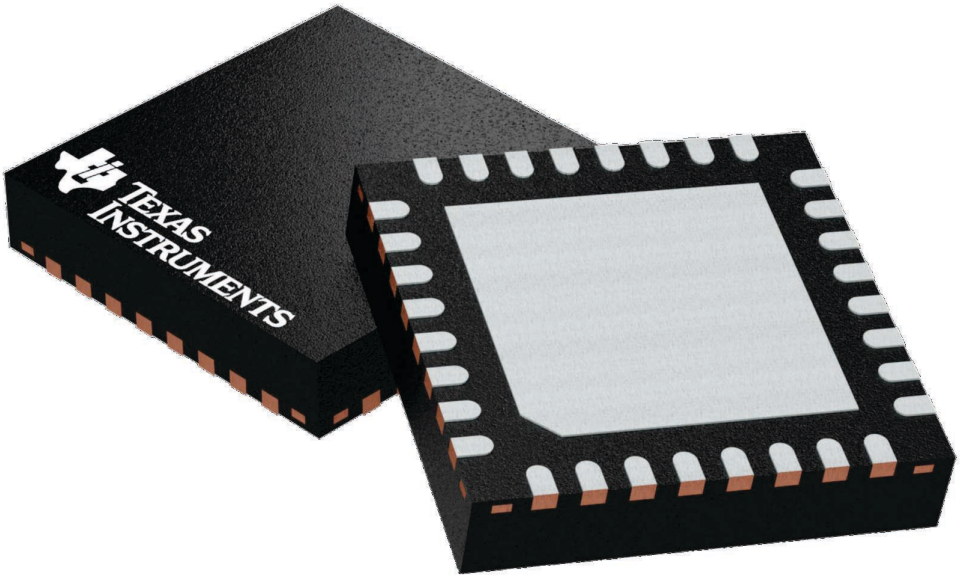

Images above are just a representation of the package family, actual package may vary.
Refer to the product data sheet for package details.

4224745/A

RHB0032E

PACKAGE OUTLINE

VQFN - 1 mm max height

PLASTIC QUAD FLATPACK - NO LEAD

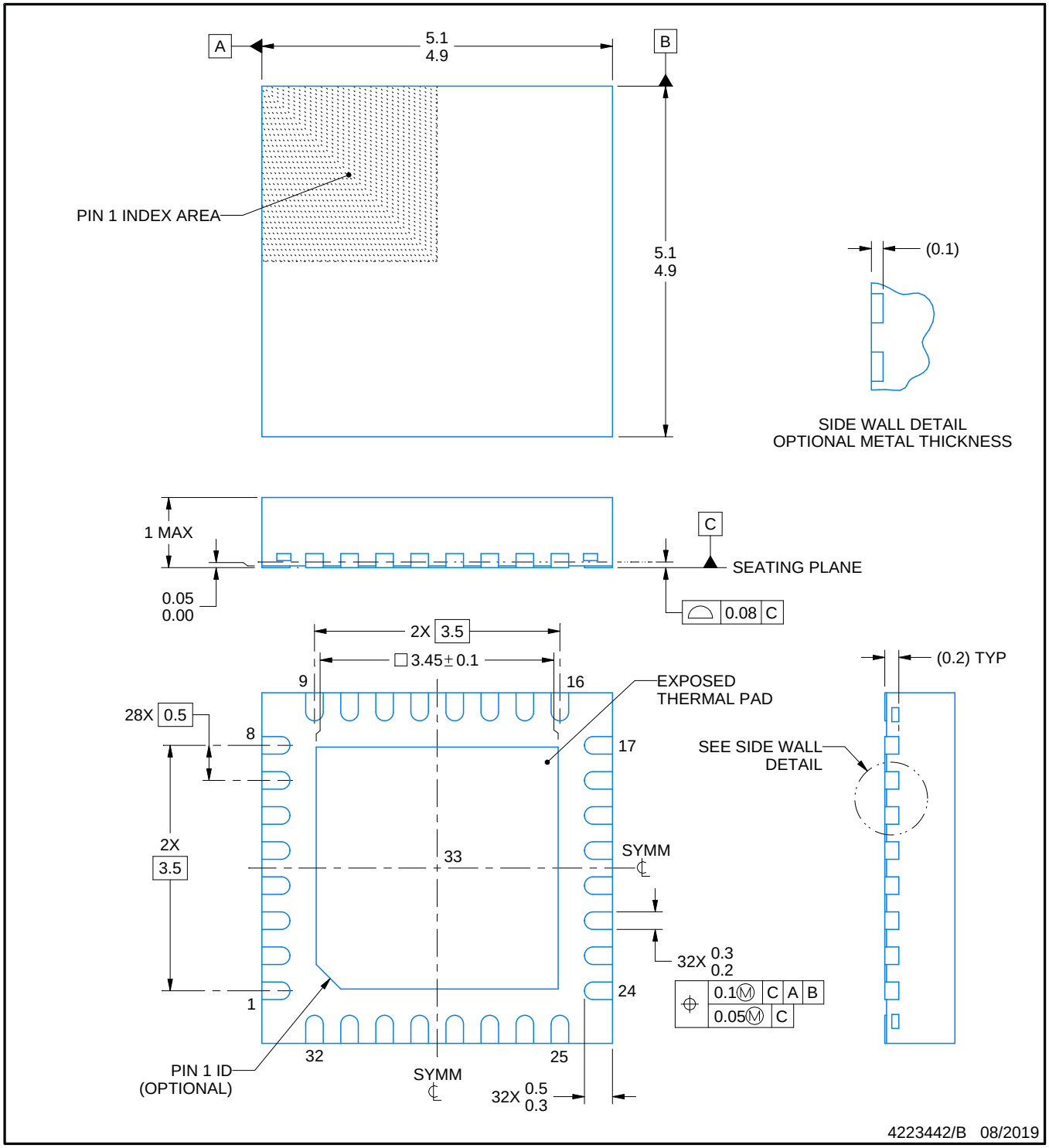

NOTES:

1. All linear dimensions are in millimeters. Any dimensions in parenthesis are for reference only. Dimensioning and tolerancing per ASME Y14.5M.
2. This drawing is subject to change without notice.
3. The package thermal pad must be soldered to the printed circuit board for thermal and mechanical performance.

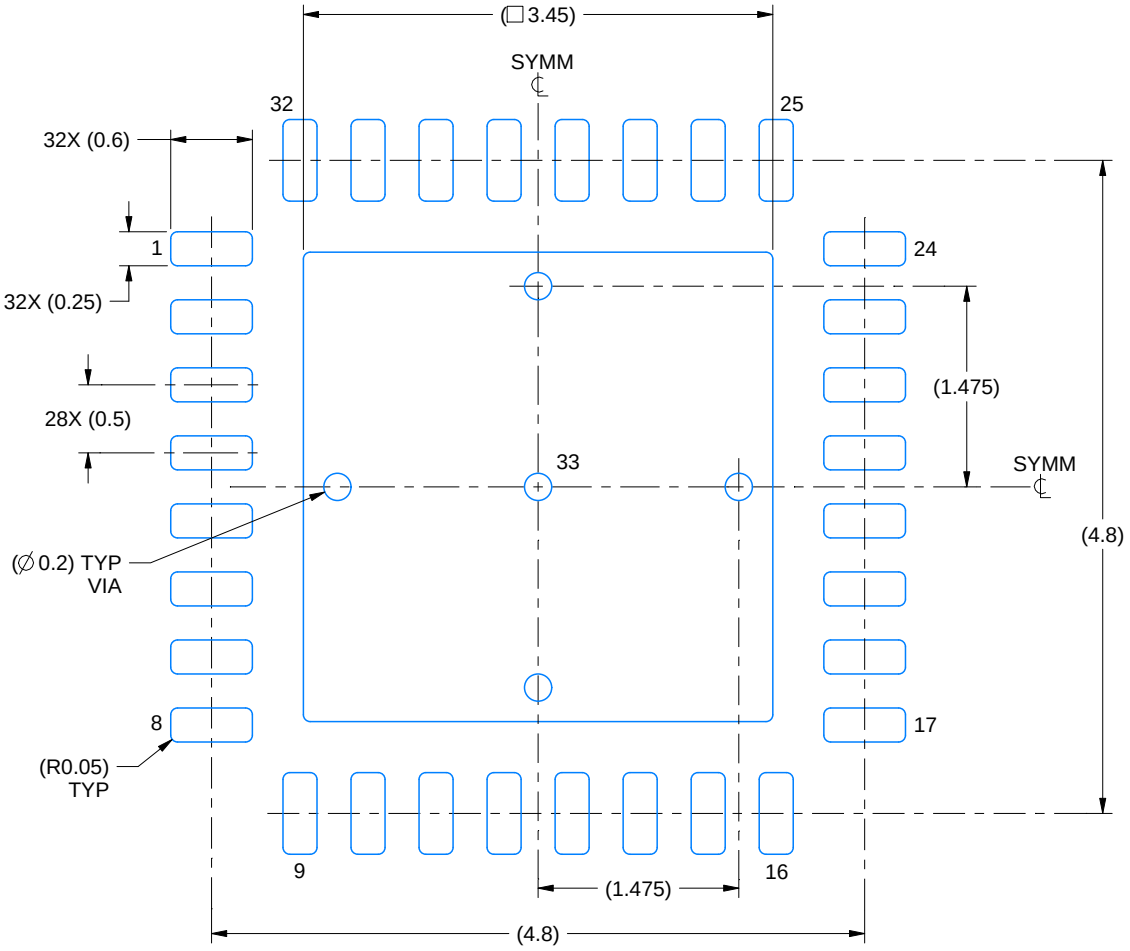

LAND PATTERN EXAMPLE
SCALE:18X

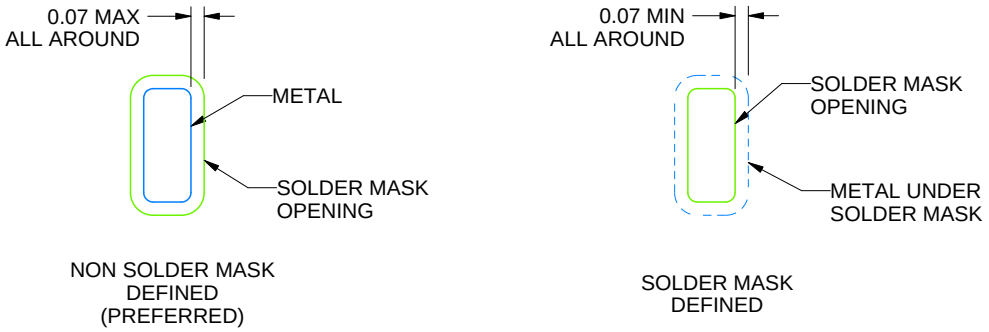

SOLDER MASK DETAILS

4223442/B 08/2019

NOTES: (continued)

4. This package is designed to be soldered to a thermal pad on the board. For more information, see Texas Instruments literature number SLUA271 (www.ti.com/lit/slua271).
5. Vias are optional depending on application, refer to device data sheet. If any vias are implemented, refer to their locations shown on this view. It is recommended that vias under paste be filled, plugged or tented.

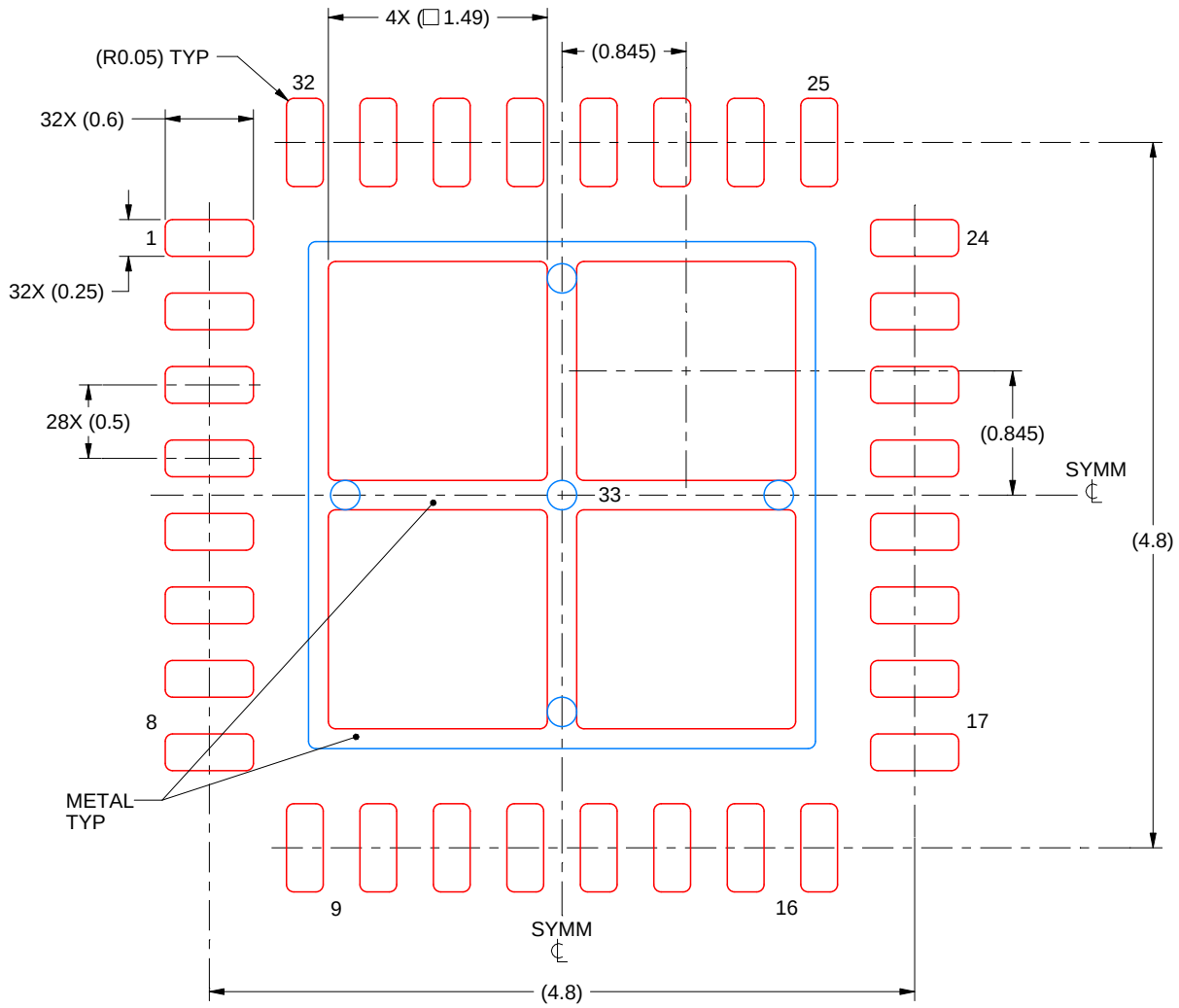

SOLDER PASTE EXAMPLE
BASED ON 0.125 mm THICK STENCIL

EXPOSED PAD 33:
75% PRINTED SOLDER COVERAGE BY AREA UNDER PACKAGE
SCALE:20X

4223442/B 08/2019

NOTES: (continued)

6. Laser cutting apertures with trapezoidal walls and rounded corners may offer better paste release. IPC-7525 may have alternate design recommendations.

IMPORTANT NOTICE AND DISCLAIMER

TI PROVIDES TECHNICAL AND RELIABILITY DATA (INCLUDING DATA SHEETS), DESIGN RESOURCES (INCLUDING REFERENCE DESIGNS), APPLICATION OR OTHER DESIGN ADVICE, WEB TOOLS, SAFETY INFORMATION, AND OTHER RESOURCES “AS IS” AND WITH ALL FAULTS, AND DISCLAIMS ALL WARRANTIES, EXPRESS AND IMPLIED, INCLUDING WITHOUT LIMITATION ANY IMPLIED WARRANTIES OF MERCHANTABILITY, FITNESS FOR A PARTICULAR PURPOSE OR NON-INFRINGEMENT OF THIRD PARTY INTELLECTUAL PROPERTY RIGHTS.

These resources are intended for skilled developers designing with TI products. You are solely responsible for (1) selecting the appropriate TI products for your application, (2) designing, validating and testing your application, and (3) ensuring your application meets applicable standards, and any other safety, security, regulatory or other requirements.

These resources are subject to change without notice. TI grants you permission to use these resources only for development of an application that uses the TI products described in the resource. Other reproduction and display of these resources is prohibited. No license is granted to any other TI intellectual property right or to any third party intellectual property right. TI disclaims responsibility for, and you will fully indemnify TI and its representatives against, any claims, damages, costs, losses, and liabilities arising out of your use of these resources.

TI’s products are provided subject to TI’s Terms of Sale or other applicable terms available either on ti.com or provided in conjunction with such TI products. TI’s provision of these resources does not expand or otherwise alter TI’s applicable warranties or warranty disclaimers for TI products.

TI objects to and rejects any additional or different terms you may have proposed.

Mailing Address: Texas Instruments, Post Office Box 655303, Dallas, Texas 75265
Copyright © 2025, Texas Instruments Incorporated