LSF0204-Q1 Automotive Qualified 4-Bit Auto-Bidirectional Multi-Voltage Level Translator

1 Features

- AEC-Q100 qualified for automotive applications
  - Temperature grade 1: –40°C ≤ T_A ≤ 125°C
  - Device HBM ESD classification level 2
  - CDM ESD classification level C6
- Provides auto-bidirectional voltage translation without direction pin
- Supports open drain or push-pull applications such as I^2C, I2S, SPI, UART, JTAG, MDIO, SDIO, and GPIO
- Supports up to 100-MHz up translation and greater than 100-MHz down translation at ≤ 30-pF capacitor load and up to 40-MHz up/down translation at 50-pF capacitor load
- Supports I_{off}, partial power down mode (see *Section 7.3*)
- Allows bidirectional voltage level translation between
  - 0.95 V ↔ 1.8, 2.5, 3.3, 5.5 V
  - 1.2 V ↔ 1.8, 2.5, 3.3, 5.5 V
  - 1.8 V ↔ 2.5, 3.3, 5.5 V
  - 2.5 V ↔ 3.3, 5.5 V
  - 3.3 V ↔ 5.5 V
- 5-V tolerance on I/O ports
- Low R_{on} enables better signal integrity
- Flow-through pinout for easy PCB trace routing
- Latch-up performance exceeds 100 mA per JESD17

2 Applications

- I2S, JTAG, SPI, SDIO, UART, I^2C, MDIO, PMBus, SMBus and other interfaces
- Infotainment head unit
- Graphical cluster
- ADAS fusion
- ADAS front camera
- HEV battery management system

3 Description

The LSF0204-Q1 is automotive qualified four channel auto bidirectional voltage translator that operate from 0.8 V to 4.5 V (Vref_A) and 1.8 V to 5.5 V (Vref_B). This range allows for bidirectional voltage translations between 0.8 V and 5.5 V without the need for a direction pin.

When the An or Bn port is LOW, the switch is in the ON-state and a low resistance connection exists between the An and Bn ports. The low R_{on} of the switch allows connections to be made with minimal propagation delay and minimal signal distortion. The voltage on the A or B side will be limited to Vref_A and can be pulled up to any level between Vref_A and 5.5 V

The supply voltage (V_{PUn}) for each channel may be individually set up with a pull up resistor. For example, CH1 may be used in up-translation mode (1.2 V ↔ 3.3 V) and CH2 in down-translation mode (2.5 V ↔ 1.8 V).

When EN is HIGH, the translator switch is on, and the An I/O is connected to the Bn I/O, respectively, allowing bidirectional data flow between ports. When EN is LOW, the translator switch is off, and a high-impedance state exists between ports. The EN input circuit is designed to be supplied by Vref_A. EN must be LOW to ensure the high-impedance state during power-up or power-down.

Device Information(1)

PART NUMBER	PACKAGE	BODY SIZE (NOM)
LSF0204QPWRQ1	TSSOP (14)	5.00 mm × 4.40 mm

(1) For all available packages, see the orderable addendum at the end of the datasheet.

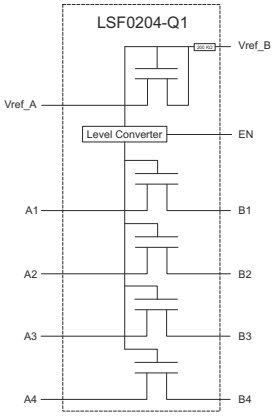

Simplified Schematic

An IMPORTANT NOTICE at the end of this data sheet addresses availability, warranty, changes, use in safety-critical applications, intellectual property matters and other important disclaimers. PRODUCTION DATA.

Table of Contents

1 Features....1
2 Applications....1
3 Description....1
4 Revision History....2
5 Pin Configuration and Functions....3
6 Specifications....4
6.1 Absolute Maximum Ratings....4
6.2 ESD Ratings....4
6.3 Recommended Operating Conditions....4
6.4 Thermal Information....4
6.5 Electrical Characteristics....5
6.6 Switching Characteristics: AC Performance (Translating Down, 3.3 V to 1.8 V)....6
6.7 Switching Characteristics: AC Performance (Translating Down, 3.3 V to 1.2 V)....6
6.8 Switching Characteristics: AC Performance (Translating Up, 1.8 V to 3.3 V)....7
6.9 Switching Characteristics: AC Performance (Translating Up, 1.2 V to 1.8 V)....7
6.10 Typical Characteristics....8
7 Detailed Description....11
7.1 Overview....11
7.2 Functional Block Diagram....11
7.3 Feature Description....12
7.4 Device Functional Modes....12
8 Application and Implementation....13
8.1 Application Information....13
8.2 Typical Applications....13
9 Power Supply Recommendations....17
10 Layout....17
10.1 Layout Guidelines....17
10.2 Layout Example....17
11 Device and Documentation Support....18
11.1 Documentation Support....18
11.2 Receiving Notification of Documentation Updates....18
11.3 Support Resources....18
11.4 Trademarks....18
11.5 Electrostatic Discharge Caution....18
11.6 Glossary....18
12 Mechanical, Packaging, and Orderable Information....18

4 Revision History

NOTE: Page numbers for previous revisions may differ from page numbers in the current version.

Changes from Revision A (September 2018) to Revision B (April 2021)	Page
• Updated the numbering format for tables, figures, and cross-references throughout the document	1
• Updated the *Bidrectional Translation* section to include inclusive terminology	14

Changes from Revision * (June 2018) to Revision A (September 2018)	Page
• Changed product status from Advanced Information to Production Data	1

Copyright © 2021 Texas Instruments Incorporated

5 Pin Configuration and Functions

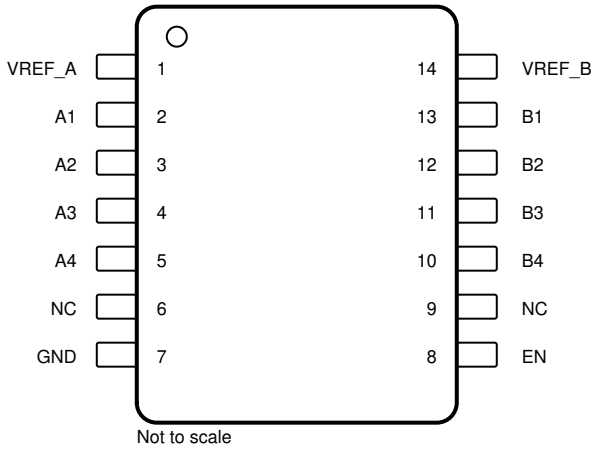

Figure 5-1. PW Package
14-Pin TSSOP
Top View

Table 5-1. Pin Functions 2

PIN		I/O	DESCRIPTION
NAME	NO.		
VREF_A	1	—	Reference supply voltage; see Section 8 section
A1	2	I/O	Input/output 1.
A2	3	I/O	Input/output 2.
A3	4	I/O	Input/output 3.
A4	5	I/O	Input/output 4.
NC	6	—	No connection. Not internally connected.
GND	7	—	Ground
EN	8	I	Translation enable input, EN is active-high
NC	9	—	No connection. Not internally connected.
B4	10	I/O	Input/output 4.
B3	11	I/O	Input/output 3.
B2	12	I/O	Input/output 2.
B1	13	I/O	Input/output 1.
VREF_B	14	—	Reference supply voltage; see Section 8 section

Copyright © 2021 Texas Instruments Incorporated

6 Specifications

6.1 Absolute Maximum Ratings

over operating free-air temperature range (unless otherwise noted) [(1)]

		MIN	MAX	UNIT
Input voltage, V_I [(2)]		–0.5	7	V
Input and output voltage, $V_{I/O}$ [(2)]		–0.5	7	V
Continuous channel current			128	mA
Input clamp current, I_{IK}	$V_I < 0$		–50	mA
Junction temperature, T_J			150	°C
Storage temperature, T_{stg}		–65	150	°C

(1) Stresses beyond those listed under *Absolute Maximum Ratings* may cause permanent damage to the device. These are stress ratings only, which do not imply functional operation of the device at these or any other conditions beyond those indicated under *Recommended Operating Conditions*. Exposure to absolute-maximum-rated conditions for extended periods may affect device reliability.

(2) The input and input/output negative-voltage ratings may be exceeded if the input and input/output clamp-current ratings are observed.

6.2 ESD Ratings

			VALUE	UNIT
$V_{(ESD)}$	Electrostatic discharge	Human-body model (HBM), per AEC Q100-002[(1)]	±2000	V
		Charged-device model (CDM), per AEC Q100-001	±1000	

(1) AEC Q100-002 indicates that HBM stressing shall be in accordance with the ANSI/ESDA/JEDEC JS-001 specification.

6.3 Recommended Operating Conditions

over operating free-air temperature range (unless otherwise noted)

		MIN	MAX	UNIT
$V_{I/O}$	Input/output voltage	0	5.5	V
$V_{ref_A/B/EN}$	Reference voltage	0	5.5	V
I_{PASS}	Pass transistor current		64	mA
T_A	Operating free-air temperature	–40	125	°C

6.4 Thermal Information

THERMAL METRIC[(1)]		LSF0204-Q1 PW (TSSOP) 14 PINS	UNIT
$R_{\theta JA}$	Junction-to-ambient thermal resistance	157.9	°C
$R_{\theta JC(top)}$	Junction-to-case (top) thermal resistance	82.3	°C
$R_{\theta JB}$	Junction-to-board thermal resistance	100.0	°C
ψ_{JT}	Junction-to-top characterization parameter	22.9	°C
ψ_{JB}	Junction-to-board characterization parameter	99.0	°C
$R_{\theta JC(bot)}$	Junction-to-case (bottom) thermal resistance	N/A	°C

(1) For more information about traditional and new thermal metrics, refer to the *Semiconductor and IC Package Thermal Metrics* application report.

Copyright © 2021 Texas Instruments Incorporated

6.5 Electrical Characteristics

over recommended operating free-air temperature range (unless otherwise noted)

PARAMETER		TEST CONDITIONS		MIN	TYP(1)	MAX	UNIT
V_{IK}	Input clamp voltage	I_I = -18 mA, V_{EN} = 0				–1.2	V
I_{IH}	I/O input high leakage	V_I = 5 V, V_{EN} = 0				5.0	µA
I_{CCBA}	Leakage from Vref_B to Vref_A	V_{ref_B} = 3.3 V, V_{ref_A} = 1.8 V, V_{EN} = V_{ref_A} I_O = 0, V_I = 3.3 V or GND				3.5	µA
I_{CCA} + I_{CCB} (3)	Total Current through GND	V_{ref_B} = 3.3 V, V_{ref_A} = 1.8 V, V_{EN} = V_{ref_A} I_O = 0, V_I = 3.3 V or GND			0.2		µA
I_{IN}	Control pin current	V_{ref_B} = 5.5 V, V_{ref_A} = 4.5 V, V_{EN} = 0 to V_{ref_A} I_O = 0				±1	µA
I_{off}	Power Off Leakage Current	V_{ref_B} = V_{ref_A} = 0 V, V_{EN} = GND I_O = 0, V_I = 5 V or GND				±1	µA
$C_{I(ref_A/B/EN)}$	Input capacitance	V_I = 3 V or 0			7		pF
$C_{io(off)}$	I/O pin off-state capacitance	V_O = 3 V or 0, VEN = 0			5.0	6.0	pF
$C_{io(on)}$	I/O pin on-state capacitance	V_O = 3 V or 0, VEN = Vref_A			10.5	13	pF
$V_{IH\ (EN\ pin)}$	High-level input voltage	V_{ref_A} = 1.5 V to 4.5 V		0.7×Vref_A			V
$V_{IL\ (EN\ pin)}$	Low-level input voltage	V_{ref_A} = 1.5 V to 4.5 V				0.3×Vref_A	V
$V_{IH\ (EN\ pin)}$	High-level input voltage	V_{ref_A}= 1.0 V to 1.5 V		0.8×Vref_A			V
$V_{IL\ (EN\ pin)}$	Low-level input voltage	V_{ref_A} = 1.0 V to 1.5 V				0.3×Vref_A	V
Δt/Δv (EN pin)	Input transition rise or fall rate for EN pin				10		ns/V
r_{on} (2)	On-state resistance	V_I = 0, I_O = 64 mA	V_{ref_A} = V_{EN} = 3.3 V; V_{ref_B} = 5 V		3		Ω
			V_{ref_A} = V_{EN} = 1.8 V; V_{ref_B} = 5 V		4		
		V_I = 0, I_O = 32 mA	V_{ref_A} = V_{EN} = 1.0 V; V_{ref_B} = 5 V		9		Ω
			V_{ref_A} = V_{EN} = 1.8 V; V_{ref_B} = 5 V		4		
		V_I = 0, I_O = 32 mA , V_{ref_A} = V_{EN} = 2.5 V; V_{ref_B} = 5 V			10		Ω
		V_I = 1.8 V, I_O = 15 mA, V_{ref_A} = V_{EN} = 3.3 V; V_{ref_B} = 5 V			5		Ω
		V_I = 1.0 V, I_O = 10 mA, V_{ref_A} = V_{EN} = 1.8 V; V_{ref_B} = 3.3 V			8		Ω
		V_I = 0 V, I_O = 10 mA, V_{ref_A} = V_{EN} = 1.0 V; V_{ref_B} = 3.3 V			6		Ω
		V_I = 0 V, I_O = 10 mA, V_{ref_A} = V_{EN} = 1.0 V; V_{ref_B} = 1.8 V			6		Ω

(1) All typical values are at T_A = 25°C.

(2) Measured by the voltage drop between the A and B terminals at the indicated current through the switch. On-state resistance is determined by the lowest voltage of the two (A or B) terminals.

(3) The actual supply current for LSF0204 is I_{CCA} + I_{CCB}; the leakage from Vref_B to Vref_A can be measured on Vref_A and Vref_B pin

6.6 Switching Characteristics: AC Performance (Translating Down, 3.3 V to 1.8 V)

over recommended operating free-air temperature range, V_{rev-A} = 1.8 V, V_{rev-B} = 3.3 V, V_{EN} = 1.8 V, Vpu_1 = 3.3 V, Vpu_2 = 1.8 V, R_L = NA, V_{IH} = 3.3 V, V_{IL} = 0 V_M = 1.15 V (unless otherwise noted)

PARAMETER		TEST CONDITION		MIN	TYP	MAX	UNIT
t_{PLH}	Propagation delay time (low-to-high output)	(Input) A or B-to-B or A (Output)	C_L = 50 pF		0.7	5.49	ns
			C_L = 30 pF		0.5	5.29	
			C_L = 15 pF		0.3	5.19	
t_{PHL}	Propagation delay time (high-to-low output)	(Input) A or B-to-B or A (Output)	C_L = 50 pF		0.9	4.9	ns
			C_L = 30 pF		0.7	4.7	
			C_L = 15 pF		0.5	4.5	
t_{PLZ}	Disable time (from low level)	(Input) A or B-to-B or A (Output)	C_L = 50 pF		13	18	ns
			C_L = 30 pF		12	16.5	
			C_L = 15 pF		11	15	
t_{PZL}	Disable time	(Input) A or B-to-B or A (Output)	C_L = 50 pF		33	45	ns
			C_L = 30 pF		30	40	
			C_L = 15 pF		23	37	
f_{MAX}	Maximum time	(Input) A or B-to-B or A (Output)	C_L = 50 pF		50		MHz
			C_L = 30 pF		100		
			C_L = 15 pF		100		

6.7 Switching Characteristics: AC Performance (Translating Down, 3.3 V to 1.2 V)

over recommended operating free-air temperature range V_{rev-A} = 1.2 V, V_{rev-B} = 3.3 V, V_{EN} = 1.2 V, Vpu_1 = 3.3 V, Vpu_2 = 1.2 V, R_L = NA, V_{IH} = 3.3V, V_{IL} = 0 V_M = 0.85 V (unless otherwise noted)

PARAMETER		TEST CONDITION		MIN	TYP	MAX	UNIT
t_{PLH}	Propagation delay time (low-to-high output)	(Input) A or B-to-B or A (Output)	C_L = 50 pF		0.8	4.1	ns
			C_L = 30 pF		0.5	3.9	
			C_L = 15 pF		0.3	3.8	
t_{PHL}	Propagation delay time (high-to-low output)	(Input) A or B-to-B or A (Output)	C_L = 50 pF		0.9	4.7	ns
			C_L = 30 pF		0.7	4.5	
			C_L = 15 pF		0.6	4.3	
f_{MAX}	Maximum time	(Input) A or B-to-B or A (Output)	C_L = 50 pF		50		MHz
			C_L = 30 pF		100		
			C_L = 15 pF		100		

Copyright © 2021 Texas Instruments Incorporated

6.8 Switching Characteristics: AC Performance (Translating Up, 1.8 V to 3.3 V)

over recommended operating free-air temperature range V_{rev-A} = 1.8 V, V_{rev-B} = 3.3 V, V_{EN} = 1.8 V, Vpu_1 = 3.3 V, Vpu_2 = 1.8V, R_L = 500 Ω, V_{IH} = 1.8V,$_{VIL}$ = 0 V_M = 0.9V (unless otherwise noted)

PARAMETER		TEST CONDITION		MIN	TYP	MAX	UNIT
t_{PLH}	Propagation delay time (low-to-high output)	(Input) A or B-to-B or A (Output)	C_L = 50 pF		0.6	5.7	ns
			C_L = 30 pF		0.4	5.3	
			C_L = 15 pF		0.2	5.13	
t_{PHL}	Propagation delay time (high-to-low output)	(Input) A or B-to-B or A (Output)	C_L = 50 pF		1.3	6.7	ns
			C_L = 30 pF		1	6.4	
			C_L = 15 pF		0.7	5.3	
t_{PLZ}	Disable time (from low level)	(Input) A or B-to-B or A (Output)	C_L = 50 pF		13	18	ns
			C_L = 30 pF		12	16.5	
			C_L = 15 pF		11	15	
t_{PZL}	Disable time	(Input) A or B-to-B or A (Output)	C_L = 50 pF		33	45	ns
			C_L = 30 pF		30	40	
			C_L = 15 pF		23	37	
f_{MAX}	Maximum time	(Input) A or B-to-B or A (Output)	C_L = 50 pF		50		MHz
			C_L = 30 pF		100		
			C_L = 15 pF		100		

6.9 Switching Characteristics: AC Performance (Translating Up, 1.2 V to 1.8 V)

over recommended operating free-air temperature range, V_{rev-A} = 1.2 V, V_{rev-B} = 1.8 V, V_{EN} = 1.2 V, Vpu_1 = 1.8 V, Vpu_2 = 1.2 V, R_L = 500 Ω, V_{IH} = 1.2V, V_{IL} = 0 V_M = 0.6 V (unless otherwise noted)

PARAMETER		TEST CONDITION		MIN	TYP	MAX	UNIT
t_{PLH}	Propagation delay time (low-to-high output)	(Input) A or B-to-B or A (Output)	C_L = 50 pF		0.65	7.25	ns
			C_L = 30 pF		0.4	7.05	
			C_L = 15 pF		0.2	6.85	
t_{PHL}	Propagation delay time (high-to-low output)	(Input) A or B-to-B or A (Output)	C_L = 50 pF		1.6	7.03	ns
			C_L = 30 pF		1.3	6.5	
			C_L = 15 pF		1	5.4	
f_{MAX}	Maximum time	(Input) A or B-to-B or A (Output)	C_L = 50 pF		50		MHz
			C_L = 30 pF		100		
			C_L = 15 pF		100		

Copyright © 2021 Texas Instruments Incorporated

6.10 Typical Characteristics

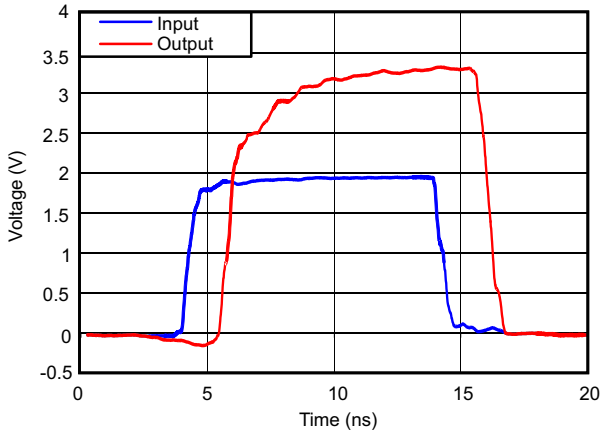

Figure 6-1. Signal Integrity (1.8 V to 3.3 V Translation Up at 50 MHz)

Copyright © 2021 Texas Instruments Incorporated

Parameter Measurement Information

The outputs are measured one at a time, with one transition per measurement. All input pulses are supplied by generators that have the following characteristics:

- PRR ≤ 10 MHz
- Z_O = 50 Ω
- T_r ≤ 2 ns
- T_f ≤ 2 ns

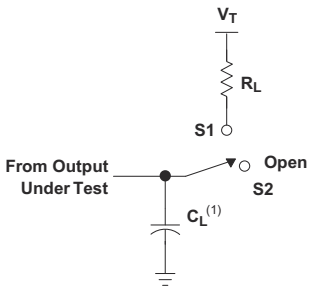

A. C_L includes probe and jig capacitance.

Figure 7-1. Load Circuit for Outputs

USAGE	SWITCH
Translating up	S1
Translating down	S2

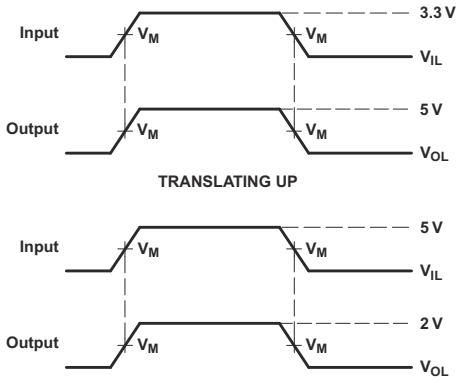

Figure 7-2. Translating Down

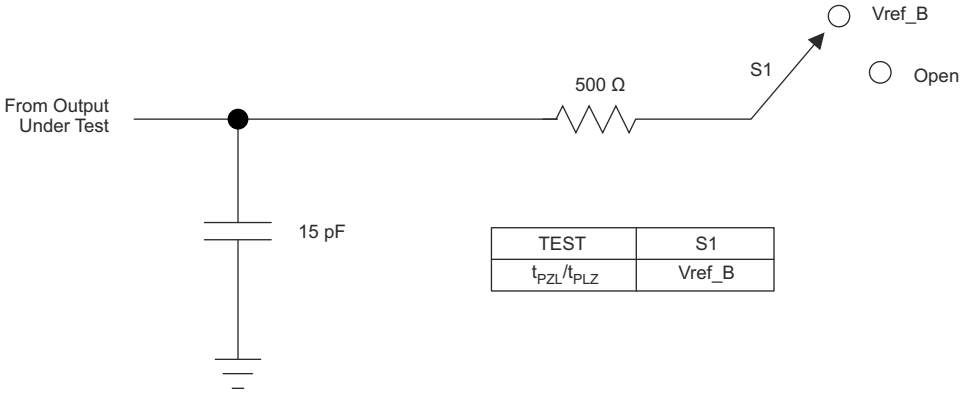

TEST	S1
t_{PZL}/t_{PLZ}	Vref_B

Figure 7-3. Load Circuit for Enable/Disable Time Measurement

7.1 Load Circuit AC Waveform for Outputs

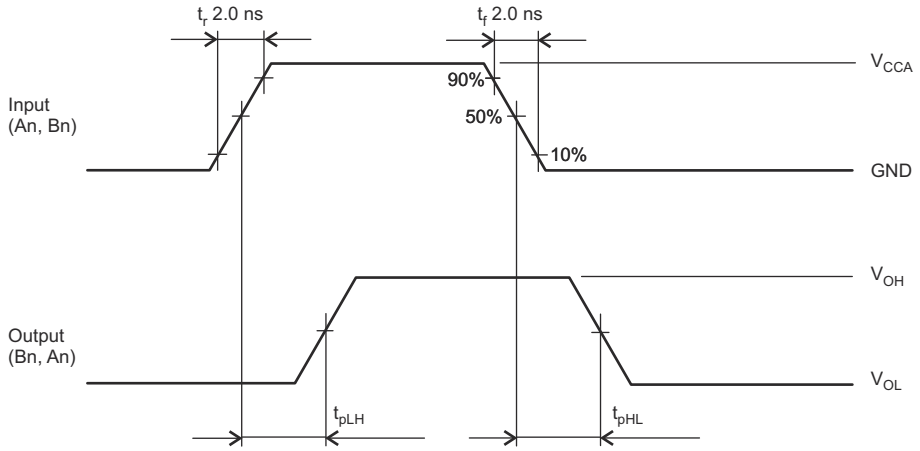

Figure 7-4. t_{PLH}, t_{PHL}

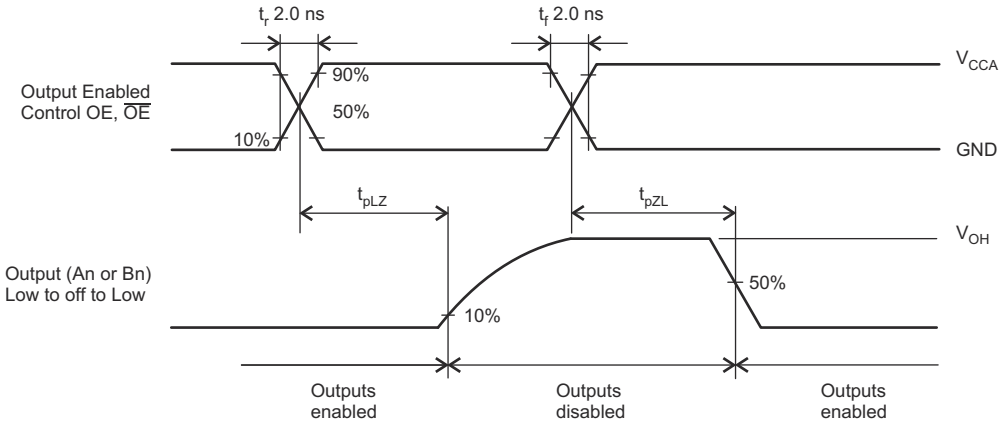

Figure 7-5. t_{PLZ}, t_{PZL}

Copyright © 2021 Texas Instruments Incorporated

7 Detailed Description

7.1 Overview

The LSF0204-Q1 may be used in level translation applications for interfacing devices or systems operating at different interface voltages. The LSF0204-Q1 is ideal for use in applications where an open-drain driver is connected to the data I/Os. LSF0204-Q1 can achieve 100 MHz data rate with the appropriate pull-up resistors and layout design. The LSF0204-Q1 can also be used in applications where a push-pull driver is connected to the data I/Os.

7.2 Functional Block Diagram

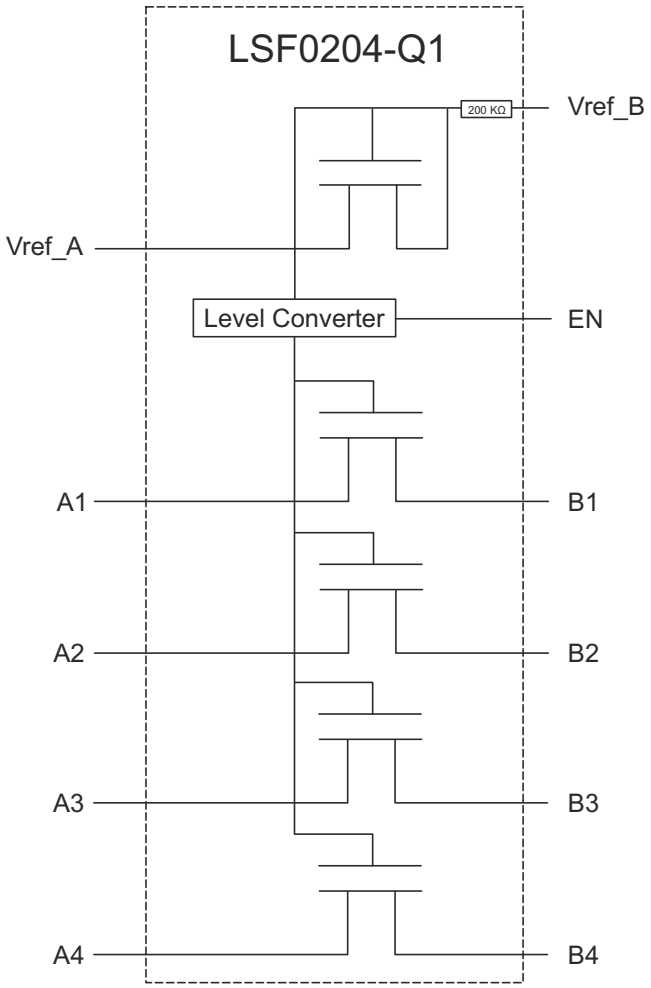

7.3 Feature Description

7.3.1 Auto-Bidirectional Voltage Translation Without DIR Pin Terminal

The LSF0204-Q1 device is an auto bidirectional voltage level translator that operates from 0.95 V to 4.5 V on Vref_A and 1.8 V to 5.5 V on Vref_B. This allows bidirectional voltage translation between 0.95 V and 5.5 V without the need for a direction pin in open-drain or push-pull applications.

7.3.2 Support Multiple High Speed Translation Interfaces

The LSF0204-Q1 device is able to perform voltage translation for open-drain interfaces such as I2C, MDIO, SMBUS, and PMBUS or push-pull interfaces such as I2S, SPI, UART, SDIO, and GPIO. The LSF0204-Q1 device supports level translation applications with transmission speeds greater than 100 MHz using a 200-Ω pullup resistor with a 15-pF capacitive load. See the *Down Translation with the LSF family* and *Up Translation with the LSF family* videos.

7.3.3 5-V Tolerance on IO Port and 125°C Support

The LSF0204-Q1, provides up to 5-V over-voltage tolerance on each of its IO channels. The device operating ambient temperature from –40°C to 125°C is critical in supporting automotive applications.

7.3.4 Channel Specific Translation

The LSF0204-Q1 can work as multi-voltage level translator using specific pullup voltage (Vpu) on each IO channel. Watch the *Multi-Voltage Translation with the LSF Family video*.

7.3.5 Ioff, Partial Power Down Mode

When V_{ref_A} or V_{ref_B} = 0, all the data IO pins are in high impedance.

EN logic circuit is referenced to V_{ref_A} supply. No power sequence is required to enable and operate LSF0204-Q1.

7.4 Device Functional Modes

Table 7-1 lists the device functional modes of the LSF0204-Q1 device.

Table 7-1. Function Table

INPUT EN[(1)] TERMINAL	FUNCTION
H	An = Bn
L	Hi-Z

(1) EN is controlled by V_{ref_A} logic levels.

Copyright © 2021 Texas Instruments Incorporated

8 Application and Implementation

Note

Information in the following applications sections is not part of the TI component specification, and TI does not warrant its accuracy or completeness. TI's customers are responsible for determining suitability of components for their purposes, as well as validating and testing their design implementation to confirm system functionality.

8.1 Application Information

LSF0204-Q1 performs voltage translation for open-drain or push-pull interface. Table 8-1 provides examples of interfaces as reference in regards to the different channel numbers that are supported by the LSF0204-Q1.

Table 8-1. Voltage Translator by Interface

PART NAME	CHANNEL NUMBER	INTERFACE
LSF0204-Q1	4	Open Drain : I^2C, MDIO, SMBus, PMBus, GPIO
		Push Pull: GPIO, SPI, I2S, UART, JTAG, SD

8.2 Typical Applications

8.2.1 I^2C, PMBus, SMBus, GPIO Application

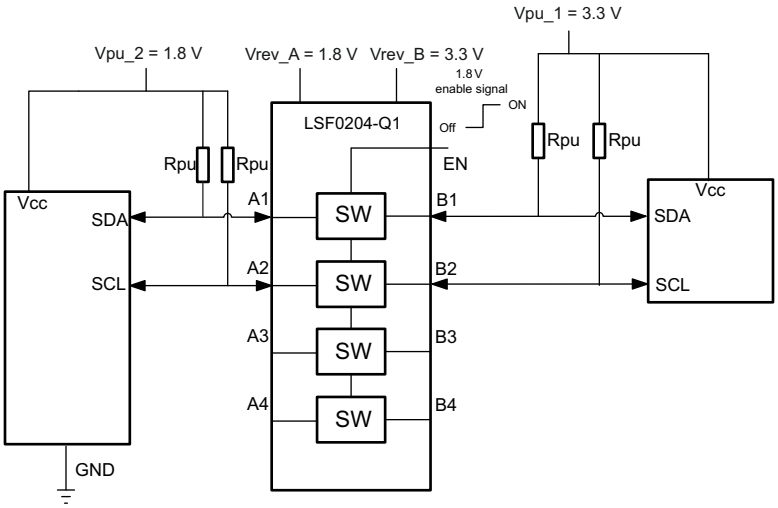

Figure 8-1. Bidirectional Translation to Multiple Voltage Levels

8.2.1.1 Design Requirements

8.2.1.1.1 Enable, Disable, and Reference Voltage Guidelines

The LSF0204-Q1 has an EN input that is used to disable the device by setting EN LOW, which places all I/Os in the high-impedance state. Since LSF0204-Q1 is switch-type voltage translator, the power consumption is very low. It is recommended to always enable LSF0204-Q1 for bidirectional application (I2C, SMBus, PMBus, or MDIO).

Table 8-2. Application Operating Condition

SYMBOL	PARAMETER	MIN	TYP	MAX	UNIT
Vref_A	Reference voltage (A)	0.8		4.5	V
Vref_B	Reference voltage (B)	Vref_A + 0.8		5.5	V
$V_{I(EN)}$ (1)	Input voltage on EN terminal	0		Vref_A	V
Vpu	Pull-up supply voltage	0		Vref_B	V

(1) Refer V_{IH} and V_{IL} for $V_{I(EN)}$

Vref_B is recommended to be 1.0 V higher than Vref_A for best signal integrity.

The LSF0204-Q1 device enables multi-voltage translation by using the desired pull up voltage on each of the channels.

Note

Vref_A must be set as lowest voltage level while using the device in multi-voltage translation application.

8.2.1.2 Detailed Design Procedure

8.2.1.2.1 Bidirectional Translation

The controller output driver may be push-pull (pull-up resistors may be required) or open-drain (pull-up resistors required) and the peripheral device output can be push-pull or open-drain (pull-up resistors are required to pull the Bn outputs to Vpu).

Note

However, if either output is push-pull, data must be unidirectional or the outputs must be 3-state and be controlled by some direction-control mechanism to prevent HIGH-to-LOW contentions in either direction. If both outputs are open-drain, no direction control is needed.

In Figure 8-1, the reference supply voltage (Vref_A) is connected to the processor core power supply voltage. When Vref_B is connected through to a 3.3 V Vpu power supply, and Vref_A is set 1.0 V. The output of A3 and B4 has a maximum output voltage equal to Vref_A, and the bidirectional interface (Ch1/2, MDIO) has a maximum output voltage equal to Vpu.

8.2.1.2.1.1 Pull-Up Resistor Sizing

The pull-up resistor value needs to limit the current through the pass transistor when it is in the ON state to about 15 mA. This ensures a pass voltage of 260 mV to 350 mV. If the current through the pass transistor is higher than 15 mA, the pass voltage also is higher in the ON state. To set the current through each pass transistor at 15 mA, to calculate the pull-up resistor value use Equation 1.

$$Rpu = (Vpu – 0.35\ V) / 0.015\ A \quad (1)$$

Table 8-3 summarizes resistor values, reference voltages, and currents at 15 mA, 10 mA, and 3 mA. The resistor value shown in the +10% column (or a larger value) should be used to ensure that the pass voltage of the transistor is 350 mV or less. The external driver must be able to sink the total current from the resistors on both sides of the LSF0204-Q1 device at 0.175 V, although the 15 mA applies only to current flowing through the LSF0204-Q1 device.

The LSF0204-Q1 does not provide any drive capability. Therefore higher frequency applications will require higher drive strength from the host side. No pullup resistor is needed on the host side (3.3 V) if the LSF0204-Q1 is being driven by standard CMOS totem pole output driver. Best practice is to minimize the trace length from the LSF0204-Q1 on the sink side (1.8 V) to minimize signal degradation.

Copyright © 2021 Texas Instruments Incorporated

Table 8-3. Pull-Up Resistor Values

PULLUP RESISTOR VALUE (Ω)						
V_{DPU}	15 mA		10mA		3 mA	
	NOMINAL	+10%(1)	NOMINAL	+10%(1)	NOMINAL	+10%(1)
5 V	310	341	465	512	1550	1705
3.3 V	197	217	295	325	983	1082
2.5 V	143	158	215	237	717	788
1.8 V	97	106	145	160	483	532
1.5 V	77	85	115	127	383	422
1.2 V	57	63	85	94	283	312

(1) +10% to compensate for V_{DD} range and resistor tolerance.

8.2.1.3 Application Curve

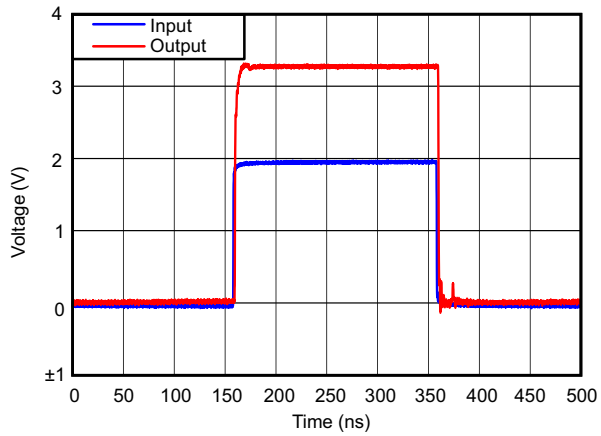

Figure 8-2. Captured Waveform From Above I²C Set-Up (1.8 V to 3.3 V at 2.5 MHz)

8.2.2 MDIO Application

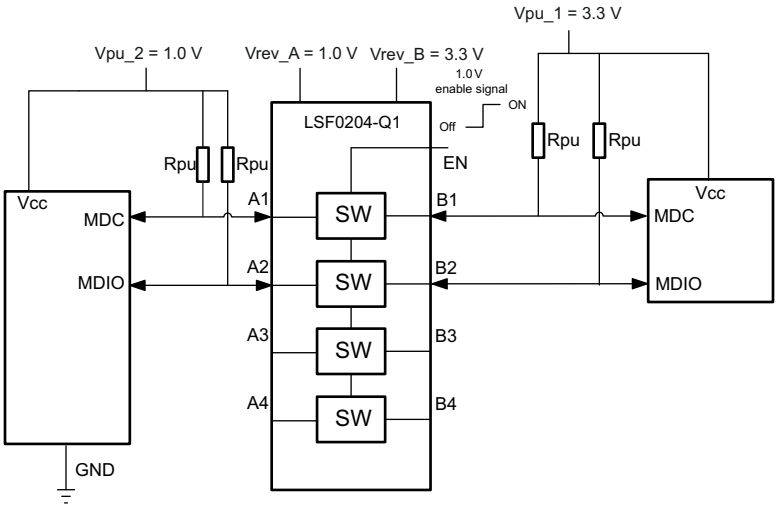

Figure 8-3. Typical Application Circuit (MDIO/Bidirectional Interface)

8.2.2.1 Design Requirements

See the *Design Requirements*.

8.2.2.2 Detailed Design Procedure

See the *Detailed Design Procedure*.

8.2.3 Multiple Voltage Translation in Single Device, Application

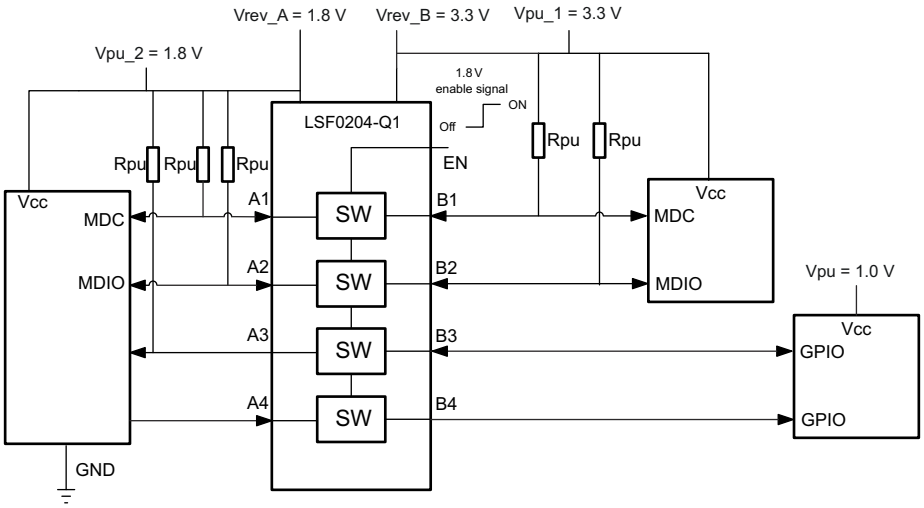

Figure 8-4. Bidirectional Translation to Multiple voltage levels

8.2.3.1 Design Requirements

See the *Design Requirements*.

8.2.3.2 Detailed Design Procedure

See the *Detailed Design Procedure*.

Copyright © 2021 Texas Instruments Incorporated

9 Power Supply Recommendations

There are no power sequence requirements for the LSF0204-Q1. See *Table 8-2* for recommended operating voltages for all supply and input pins.

10 Layout

10.1 Layout Guidelines

The signal integrity of the switch-type based LSF0204-Q1 level translator is dependent on the pull-up resistor and the PCB board parasitic capacitance. Consider the following recommendations when designing with the LSF0204-Q1:

- Minimize the trace length to reduce the parasitic capacitance
- The trace length should be less than half the time of flight to reduce ringing and line reflections or non-monotonic behavior in the switching region
- Minimize stubs on the signal path
- Place the LSF0204-Q1 device near the high voltage side

10.2 Layout Example

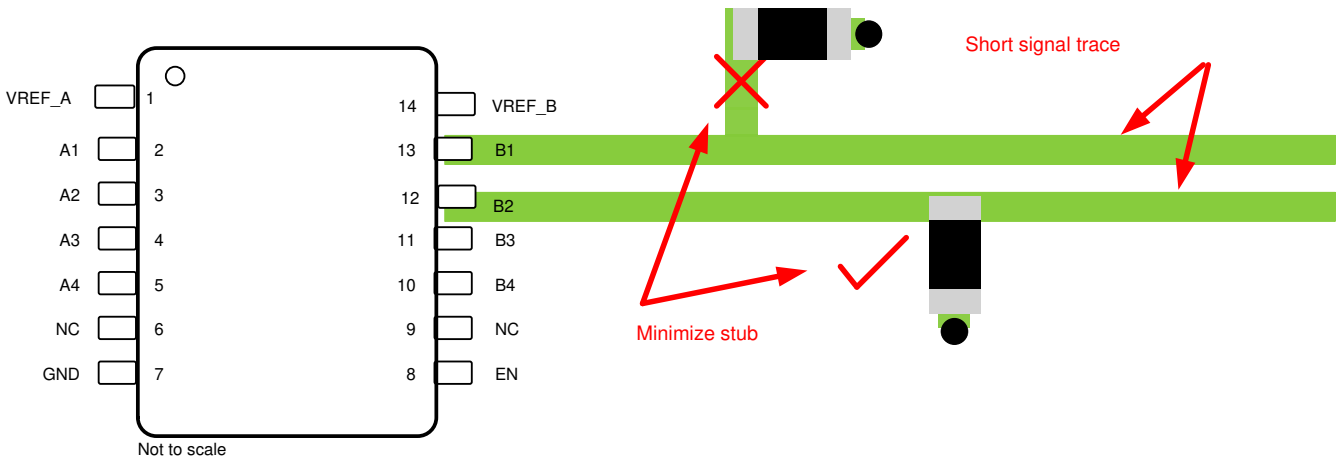

Figure 10-1. Short Trace Layout

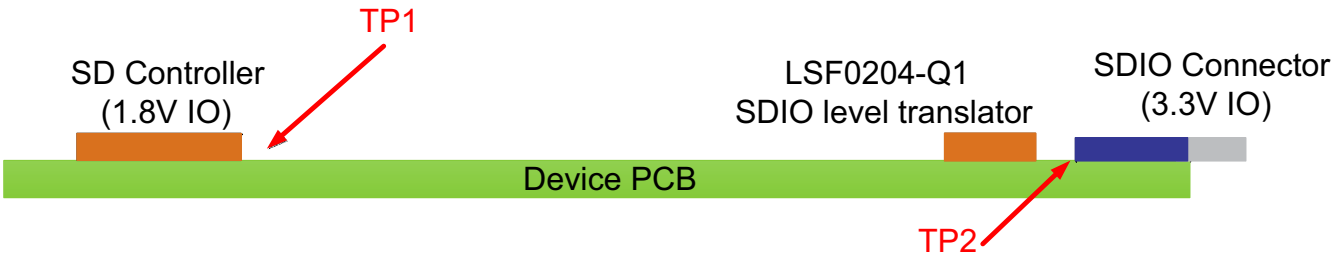

Figure 10-2. Device Placement

11 Device and Documentation Support

11.1 Documentation Support

11.1.1 Related Documentation

For related documentation see the following:

- Texas Instruments, TI Logic Minute: *Introduction – Voltage Level Translation with the LSF Family* video
- Texas Instruments, *Voltage-Level Translation with the LSF Family* application report
- Texas Instruments, *Biasing requirements for TXS, TXB, LSF Translators* application report
- Texas Instruments, *Factors affecting Vol for TXS and LSF translation devices* application report

11.2 Receiving Notification of Documentation Updates

To receive notification of documentation updates, navigate to the device product folder on ti.com. Click on *Subscribe to updates* to register and receive a weekly digest of any product information that has changed. For change details, review the revision history included in any revised document.

11.3 Support Resources

TI E2E™ support forums are an engineer's go-to source for fast, verified answers and design help — straight from the experts. Search existing answers or ask your own question to get the quick design help you need.

Linked content is provided "AS IS" by the respective contributors. They do not constitute TI specifications and do not necessarily reflect TI's views; see TI's Terms of Use.

11.4 Trademarks

TI E2E™ is a trademark of Texas Instruments.
All trademarks are the property of their respective owners.

11.5 Electrostatic Discharge Caution

This integrated circuit can be damaged by ESD. Texas Instruments recommends that all integrated circuits be handled with appropriate precautions. Failure to observe proper handling and installation procedures can cause damage.

ESD damage can range from subtle performance degradation to complete device failure. Precision integrated circuits may be more susceptible to damage because very small parametric changes could cause the device not to meet its published specifications.

11.6 Glossary

TI Glossary — This glossary lists and explains terms, acronyms, and definitions.

12 Mechanical, Packaging, and Orderable Information

The following pages include mechanical, packaging, and orderable information. This information is the most current data available for the designated devices. This data is subject to change without notice and revision of this document. For browser-based versions of this data sheet, refer to the left-hand navigation.

Copyright © 2021 Texas Instruments Incorporated

PACKAGING INFORMATION

Orderable part number	Status (1)	Material type (2)	Package | Pins	Package qty | Carrier	RoHS (3)	Lead finish/ Ball material (4)	MSL rating/ Peak reflow (5)	Op temp (°C)	Part marking (6)
LSF0204QPWRQ1	Active	Production	TSSOP (PW) | 14	2000 | LARGE T&R	Yes	NIPDAU	Level-1-260C-UNLIM	-40 to 125	LSF204Q
LSF0204QPWRQ1.B	Active	Production	TSSOP (PW) | 14	2000 | LARGE T&R	Yes	NIPDAU	Level-1-260C-UNLIM	-40 to 125	LSF204Q

(1) **Status:** For more details on status, see our product life cycle.

(2) **Material type:** When designated, preproduction parts are prototypes/experimental devices, and are not yet approved or released for full production. Testing and final process, including without limitation quality assurance, reliability performance testing, and/or process qualification, may not yet be complete, and this item is subject to further changes or possible discontinuation. If available for ordering, purchases will be subject to an additional waiver at checkout, and are intended for early internal evaluation purposes only. These items are sold without warranties of any kind.

(3) **RoHS values:** Yes, No, RoHS Exempt. See the TI RoHS Statement for additional information and value definition.

(4) **Lead finish/Ball material:** Parts may have multiple material finish options. Finish options are separated by a vertical ruled line. Lead finish/Ball material values may wrap to two lines if the finish value exceeds the maximum column width.

(5) **MSL rating/Peak reflow:** The moisture sensitivity level ratings and peak solder (reflow) temperatures. In the event that a part has multiple moisture sensitivity ratings, only the lowest level per JEDEC standards is shown. Refer to the shipping label for the actual reflow temperature that will be used to mount the part to the printed circuit board.

(6) **Part marking:** There may be an additional marking, which relates to the logo, the lot trace code information, or the environmental category of the part.

Multiple part markings will be inside parentheses. Only one part marking contained in parentheses and separated by a "~" will appear on a part. If a line is indented then it is a continuation of the previous line and the two combined represent the entire part marking for that device.

Important Information and Disclaimer: The information provided on this page represents TI's knowledge and belief as of the date that it is provided. TI bases its knowledge and belief on information provided by third parties, and makes no representation or warranty as to the accuracy of such information. Efforts are underway to better integrate information from third parties. TI has taken and continues to take reasonable steps to provide representative and accurate information but may not have conducted destructive testing or chemical analysis on incoming materials and chemicals. TI and TI suppliers consider certain information to be proprietary, and thus CAS numbers and other limited information may not be available for release.

In no event shall TI's liability arising out of such information exceed the total purchase price of the TI part(s) at issue in this document sold by TI to Customer on an annual basis.

OTHER QUALIFIED VERSIONS OF LSF0204-Q1 :

- Catalog : LSF0204

NOTE: Qualified Version Definitions:

- Catalog - TI's standard catalog product

TAPE AND REEL INFORMATION

REEL DIMENSIONS

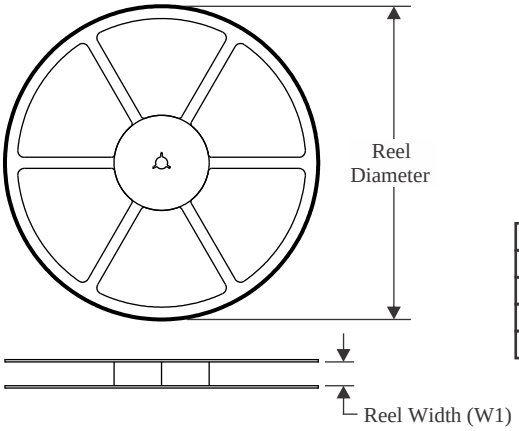

TAPE DIMENSIONS

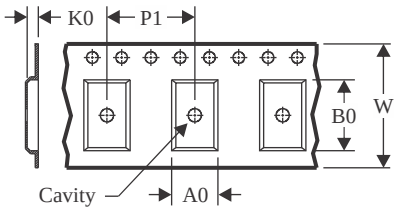

A0	Dimension designed to accommodate the component width
B0	Dimension designed to accommodate the component length
K0	Dimension designed to accommodate the component thickness
W	Overall width of the carrier tape
P1	Pitch between successive cavity centers

QUADRANT ASSIGNMENTS FOR PIN 1 ORIENTATION IN TAPE

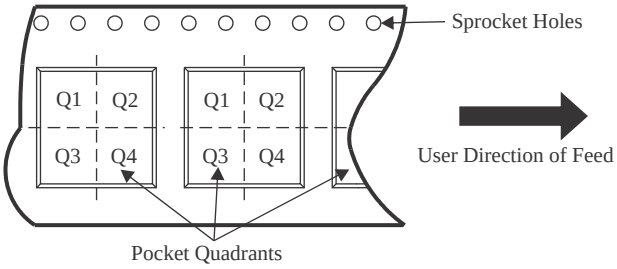

*All dimensions are nominal

Device	Package Type	Package Drawing	Pins	SPQ	Reel Diameter (mm)	Reel Width W1 (mm)	A0 (mm)	B0 (mm)	K0 (mm)	P1 (mm)	W (mm)	Pin1 Quadrant
LSF0204QPWRQ1	TSSOP	PW	14	2000	330.0	12.4	6.9	5.6	1.6	8.0	12.0	Q1

TAPE AND REEL BOX DIMENSIONS

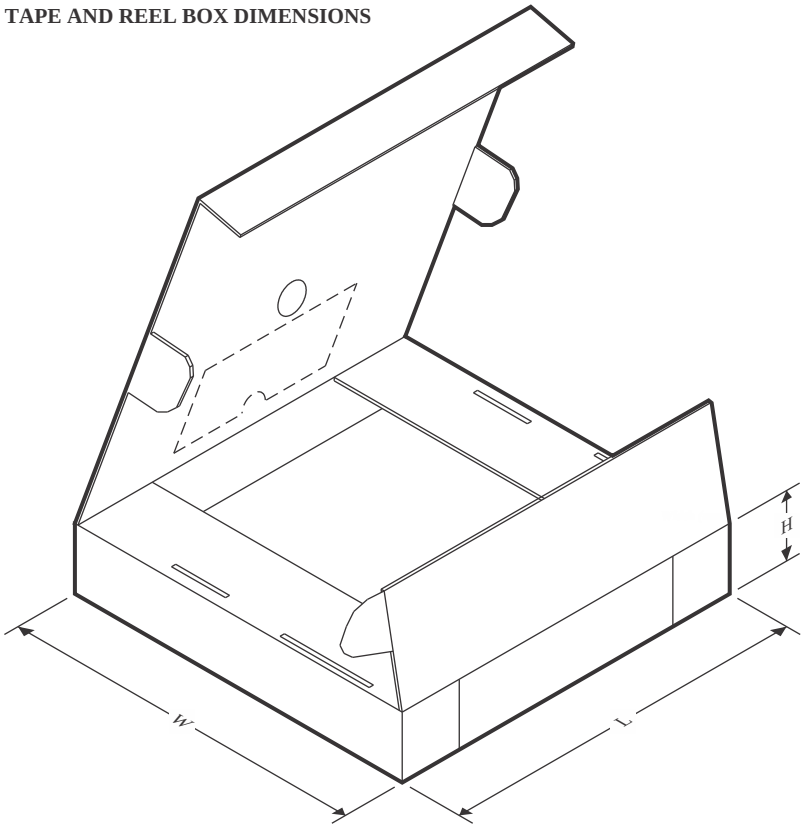

*All dimensions are nominal

Device	Package Type	Package Drawing	Pins	SPQ	Length (mm)	Width (mm)	Height (mm)
LSF0204QPWRQ1	TSSOP	PW	14	2000	356.0	356.0	35.0

PW0014A

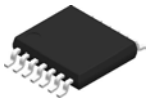

PACKAGE OUTLINE

TSSOP - 1.2 mm max height

SMALL OUTLINE PACKAGE

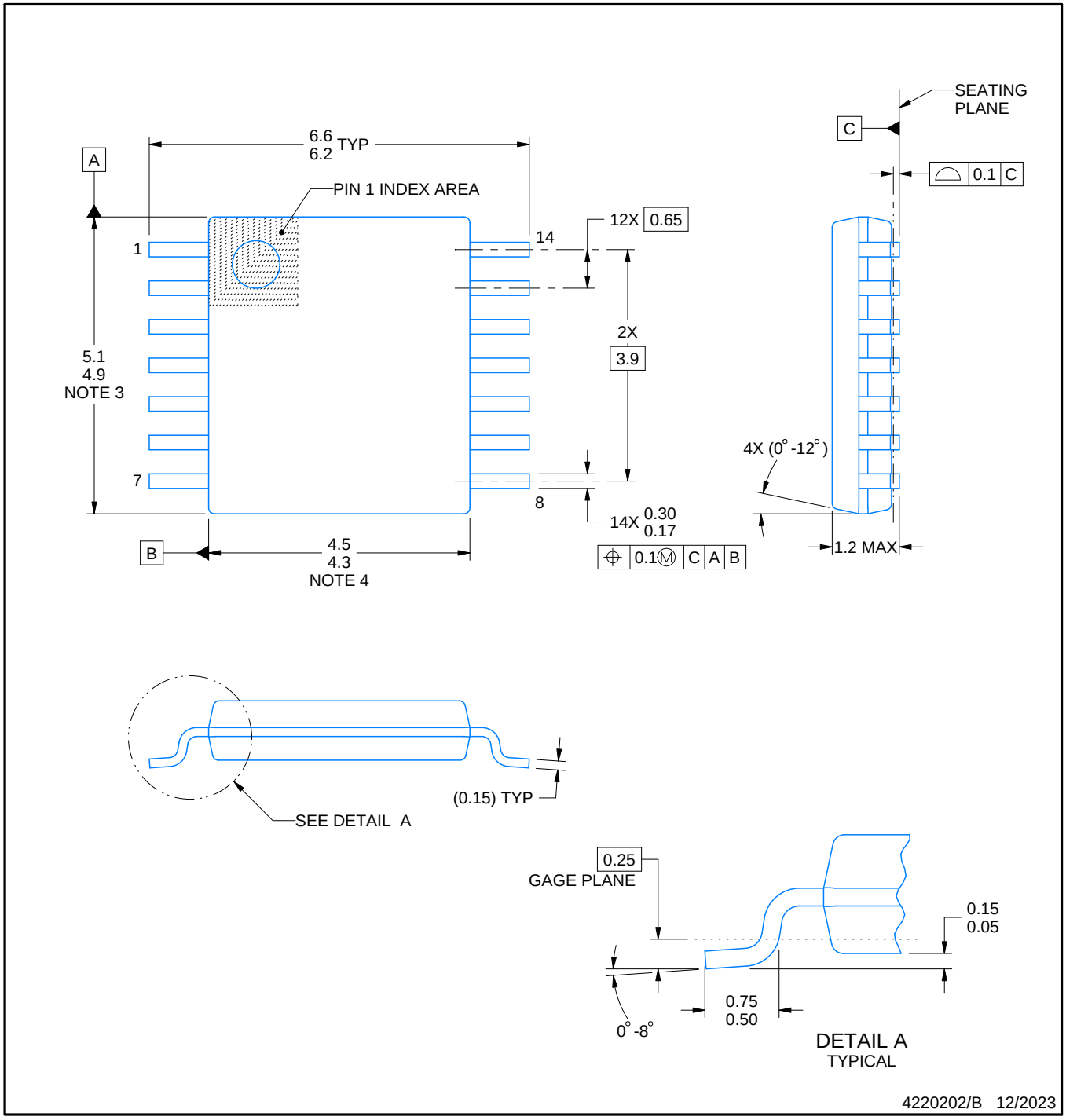

NOTES:

1. All linear dimensions are in millimeters. Any dimensions in parenthesis are for reference only. Dimensioning and tolerancing per ASME Y14.5M.
2. This drawing is subject to change without notice.
3. This dimension does not include mold flash, protrusions, or gate burrs. Mold flash, protrusions, or gate burrs shall not exceed 0.15 mm per side.
4. This dimension does not include interlead flash. Interlead flash shall not exceed 0.25 mm per side.
5. Reference JEDEC registration MO-153.

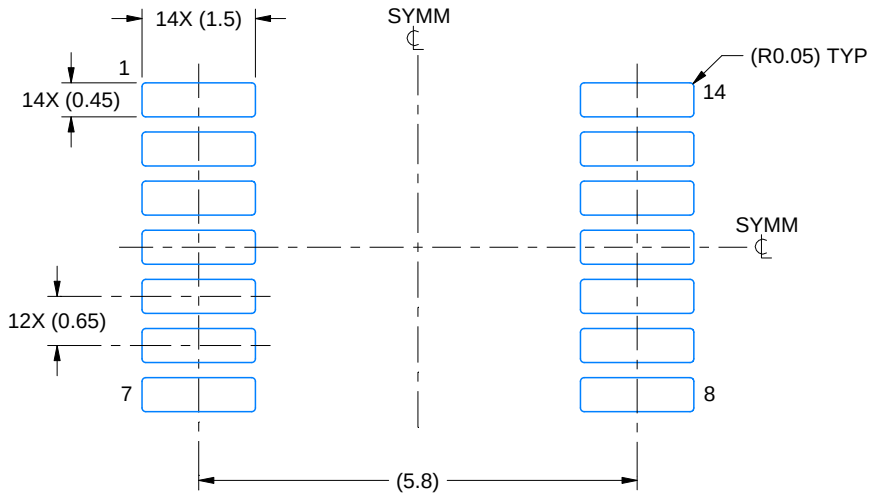

LAND PATTERN EXAMPLE
EXPOSED METAL SHOWN
SCALE: 10X

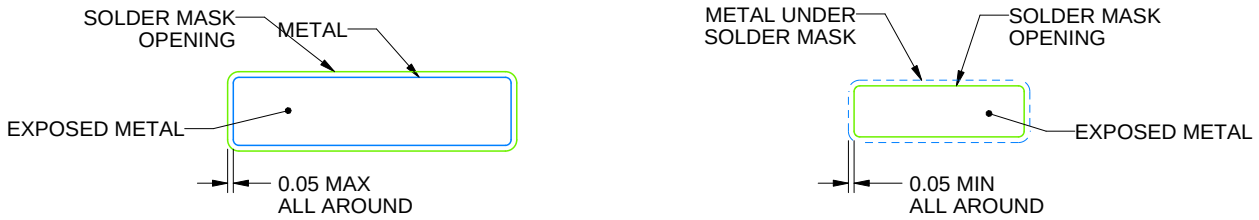

NON-SOLDER MASK DEFINED (PREFERRED)

SOLDER MASK DEFINED

SOLDER MASK DETAILS

4220202/B 12/2023

NOTES: (continued)

6. Publication IPC-7351 may have alternate designs.
7. Solder mask tolerances between and around signal pads can vary based on board fabrication site.

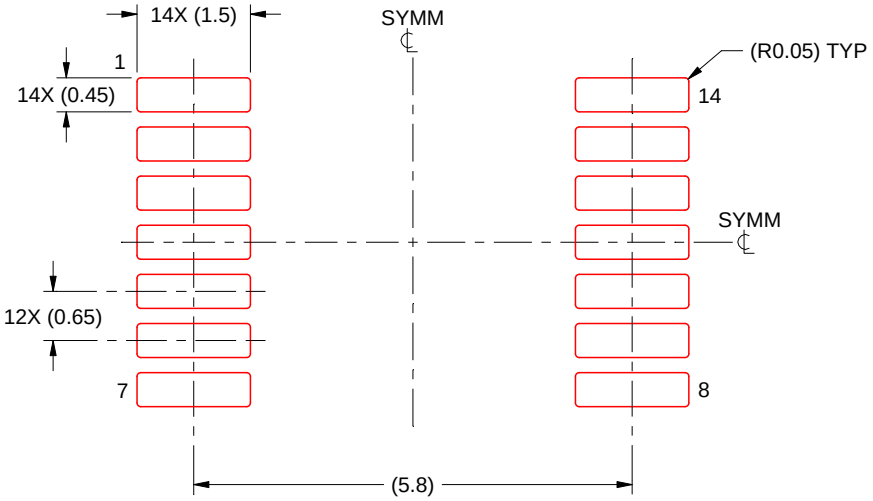

SOLDER PASTE EXAMPLE
BASED ON 0.125 mm THICK STENCIL
SCALE: 10X

4220202/B 12/2023

NOTES: (continued)

8. Laser cutting apertures with trapezoidal walls and rounded corners may offer better paste release. IPC-7525 may have alternate design recommendations.
9. Board assembly site may have different recommendations for stencil design.

IMPORTANT NOTICE AND DISCLAIMER

TI PROVIDES TECHNICAL AND RELIABILITY DATA (INCLUDING DATA SHEETS), DESIGN RESOURCES (INCLUDING REFERENCE DESIGNS), APPLICATION OR OTHER DESIGN ADVICE, WEB TOOLS, SAFETY INFORMATION, AND OTHER RESOURCES “AS IS” AND WITH ALL FAULTS, AND DISCLAIMS ALL WARRANTIES, EXPRESS AND IMPLIED, INCLUDING WITHOUT LIMITATION ANY IMPLIED WARRANTIES OF MERCHANTABILITY, FITNESS FOR A PARTICULAR PURPOSE OR NON-INFRINGEMENT OF THIRD PARTY INTELLECTUAL PROPERTY RIGHTS.

These resources are intended for skilled developers designing with TI products. You are solely responsible for (1) selecting the appropriate TI products for your application, (2) designing, validating and testing your application, and (3) ensuring your application meets applicable standards, and any other safety, security, regulatory or other requirements.

These resources are subject to change without notice. TI grants you permission to use these resources only for development of an application that uses the TI products described in the resource. Other reproduction and display of these resources is prohibited. No license is granted to any other TI intellectual property right or to any third party intellectual property right. TI disclaims responsibility for, and you will fully indemnify TI and its representatives against, any claims, damages, costs, losses, and liabilities arising out of your use of these resources.

TI’s products are provided subject to TI’s Terms of Sale or other applicable terms available either on ti.com or provided in conjunction with such TI products. TI’s provision of these resources does not expand or otherwise alter TI’s applicable warranties or warranty disclaimers for TI products.

TI objects to and rejects any additional or different terms you may have proposed.

Mailing Address: Texas Instruments, Post Office Box 655303, Dallas, Texas 75265
Copyright © 2025, Texas Instruments Incorporated