Dual FET Bus Switch 2.5-V/3.3-V Low-Voltage High-Bandwidth Bus Switch

Check for Samples: SN74CB3Q3306A-EP

FEATURES

- **High-Bandwidth Data Path (up to 500 MHz[1])**
- **5-V-Tolerant I/Os With Device Powered Up or Powered Down**
- **Low and Flat ON-State Resistance (r_{on}) Characteristics Over Operating Range (r_{on} = 4 Ω Typ)**
- **Rail-to-Rail Switching on Data I/O Ports**
  - **0- to 5-V Switching With 3.3-V V_{CC}**
  - **0- to 3.3-V Switching With 2.5-V V_{CC}**
- **Bidirectional Data Flow With Near-Zero Propagation Delay**
- **Low Input/Output Capacitance Minimizes Loading and Signal Distortion ($C_{io(OFF)}$ = 3.5 pF Typ)**
- **Fast Switching Frequency ($f_{\overline{OE}}$ = 20 MHz Max)**
- **Data and Control Inputs Provide Undershoot Clamp Diodes**
- **Low Power Consumption (I_{CC} = 0.25 mA Typ)**
- **V_{CC} Operating Range From 2.3 V to 3.6 V**
- **Data I/Os Support 0- to 5-V Signaling Levels (0.8 V, 1.2 V, 1.5 V, 1.8 V, 2.5 V, 3.3 V, 5 V)**
- **Control Inputs Can Be Driven by TTL or 5-V/3.3-V CMOS Outputs**
- **I_{off} Supports Partial-Power-Down Mode Operation**
- **Latch-Up Performance Exceeds 100 mA Per JESD 78, Class II**
- **ESD Performance Tested Per JESD 22**
  - **2000-V Human-Body Model (A114-B, Class II)**
  - **1000-V Charged-Device Model (C101)**
- **Supports Both Digital and Analog Applications: USB Interface, Differential Signal Interface, Bus Isolation, Low-Distortion Signal Gating**

(1) For additional information regarding the performance characteristics of the CB3Q family, refer to the TI application report, *CBT-C, CB3T, and CB3Q Signal-Switch Families*, literature number SCDA008.

SUPPORTS DEFENSE, AEROSPACE, AND MEDICAL APPLICATIONS

- **Controlled Baseline**
- **One Assembly and Test Site**
- **One Fabrication Site**
- **Available in Military (–55°C to 125°C) Temperature Range**
- **Extended Product Life Cycle**
- **Extended Product-Change Notification**
- **Product Traceability**

PW PACKAGE (TOP VIEW)

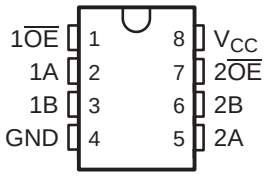

ORDERING INFORMATION

T_J	PACKAGE[1]		ORDERABLE PART NUMBER	TOP-SIDE MARKING	VID NUMBER
–55°C to 125°C	TSSOP – PW	Tube	CCB3Q3306AMPWEP	U306AM	V62/14606-01XE-T
		Tape and reel	CCB3Q3306AMPWREP		V62/14606-01XE

(1) Package drawings, standard packing quantities, thermal data, symbolization, and PCB design guidelines are available at www.ti.com/sc/package.

Please be aware that an important notice concerning availability, standard warranty, and use in critical applications of Texas Instruments semiconductor products and disclaimers thereto appears at the end of this data sheet.

PRODUCTION DATA information is current as of publication date. Products conform to specifications per the terms of the Texas Instruments standard warranty. Production processing does not necessarily include testing of all parameters.

Copyright © 2013, Texas Instruments Incorporated

These devices have limited built-in ESD protection. The leads should be shorted together or the device placed in conductive foam during storage or handling to prevent electrostatic damage to the MOS gates.

DESCRIPTION

The SN74CB3Q3306A is a high-bandwidth FET bus switch utilizing a charge pump to elevate the gate voltage of the pass transistor, providing a low and flat ON-state resistance (r_{on}). The low and flat ON-state resistance allows for minimal propagation delay and supports rail-to-rail switching on the data input/output (I/O) ports. The device also features low data I/O capacitance to minimize capacitive loading and signal distortion on the data bus. Specifically designed to support high-bandwidth applications, the SN74CB3Q3306A provides an optimized interface solution ideally suited for broadband communications, networking, and data-intensive computing systems.

The SN74CB3Q3306A is organized as two 1-bit switches with separate output-enable ($1\overline{OE}$, $2\overline{OE}$) inputs. It can be used as two 1-bit bus switches or as one 2-bit bus switch. When $\overline{OE}$ is low, the associated 1-bit bus switch is ON and the A port is connected to the B port, allowing bidirectional data flow between ports. When $\overline{OE}$ is high, the associated 1-bit bus switch is OFF, and a high-impedance state exists between the A and B ports.

This device is fully specified for partial-power-down applications using I_{off}. The I_{off} circuitry prevents damaging current backflow through the device when it is powered down. The device has isolation during power off.

To ensure the high-impedance state during power up or power down, $\overline{OE}$ should be tied to V_{CC} through a pullup resistor; the minimum value of the resistor is determined by the current-sinking capability of the driver.

Table 1. FUNCTION TABLE (EACH BUS SWITCH)

INPUT $\overline{OE}$	INPUT/OUTPUT A	FUNCTION
L	B	A port = B port
H	Z	Disconnect

LOGIC DIAGRAM (POSITIVE LOGIC)

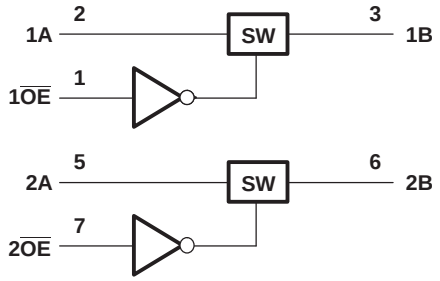

Copyright © 2013, Texas Instruments Incorporated

Figure 1. SIMPLIFIED SCHEMATIC, EACH FET SWITCH (SW)

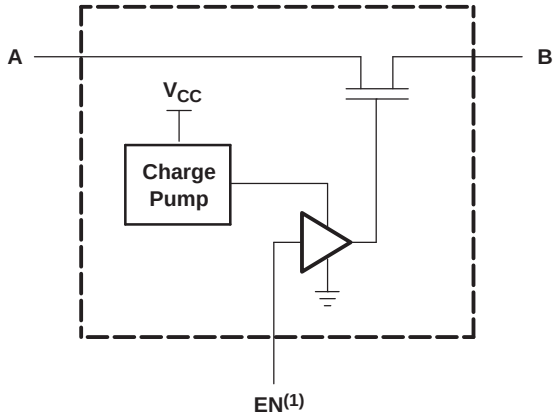

(1) EN is the internal enable signal applied to the switch.

ABSOLUTE MAXIMUM RATINGS(1)

over operating junction temperature range (unless otherwise noted)

			MIN	MAX	UNIT
V_{CC}	Supply voltage range		–0.5	4.6	V
V_{IN}	Control input voltage range(2) (3)		–0.5	7	V
$V_{I/O}$	Switch I/O voltage range(2) (3) (4)		–0.5	7	V
I_{IK}	Control input clamp current	$V_{IN} < 0$		–50	mA
$I_{I/OK}$	I/O port clamp current	$V_{I/O} < 0$		–50	mA
$I_{I/O}$	ON-state switch current(5)			±64	mA
	Continuous current through each V_{CC} or GND			±100	mA
T_J	Maximum junction temperature			150	°C
T_{stg}	Storage temperature range		–65	150	°C

(1) Stresses beyond those listed under "absolute maximum ratings" may cause permanent damage to the device. These are stress ratings only, and functional operation of the device at these or any other conditions beyond those indicated under "recommended operating conditions" is not implied. Exposure to absolute-maximum-rated conditions for extended periods may affect device reliability.
(2) All voltages are with respect to ground, unless otherwise specified.
(3) The input and output voltage ratings may be exceeded if the input and output clamp-current ratings are observed.
(4) V_I and V_O are used to denote specific conditions for $V_{I/O}$.
(5) I_I and I_O are used to denote specific conditions for $I_{I/O}$.

Copyright © 2013, Texas Instruments Incorporated

THERMAL INFORMATION

THERMAL METRIC[1]		SN74CB3Q3306A-EP PW 8 PINS	UNITS
θ_{JA}	Junction-to-ambient thermal resistance[2]	190.6	°C/W
θ_{JCtop}	Junction-to-case (top) thermal resistance[3]	74	
θ_{JB}	Junction-to-board thermal resistance[4]	119.4	
ψ_{JT}	Junction-to-top characterization parameter[5]	12	
ψ_{JB}	Junction-to-board characterization parameter[6]	117.7	
θ_{JCbot}	Junction-to-case (bottom) thermal resistance[7]	N/A	

(1) For more information about traditional and new thermal metrics, see the *IC Package Thermal Metrics* application report, SPRA953.
(2) The junction-to-ambient thermal resistance under natural convection is obtained in a simulation on a JEDEC-standard, high-K board, as specified in JESD51-7, in an environment described in JESD51-2a.
(3) The junction-to-case (top) thermal resistance is obtained by simulating a cold plate test on the package top. No specific JEDEC-standard test exists, but a close description can be found in the ANSI SEMI standard G30-88.
(4) The junction-to-board thermal resistance is obtained by simulating in an environment with a ring cold plate fixture to control the PCB temperature, as described in JESD51-8.
(5) The junction-to-top characterization parameter, ψ_{JT}, estimates the junction temperature of a device in a real system and is extracted from the simulation data for obtaining θ_{JA}, using a procedure described in JESD51-2a (sections 6 and 7).
(6) The junction-to-board characterization parameter, ψ_{JB}, estimates the junction temperature of a device in a real system and is extracted from the simulation data for obtaining θ_{JA} , using a procedure described in JESD51-2a (sections 6 and 7).
(7) The junction-to-case (bottom) thermal resistance is obtained by simulating a cold plate test on the exposed (power) pad. No specific JEDEC standard test exists, but a close description can be found in the ANSI SEMI standard G30-88.

RECOMMENDED OPERATING CONDITIONS[1]

			MIN	MAX	UNIT
V_{CC}	Supply voltage		2.3	3.6	V
V_{IH}	High-level control input voltage	V_{CC} = 2.3 V to 2.7 V	1.7	5.5	V
		V_{CC} = 2.7 V to 3.6 V	2	5.5	
V_{IL}	Low-level control input voltage	V_{CC} = 2.3 V to 2.7 V	0	0.7	V
		V_{CC} = 2.7 V to 3.6 V	0	0.8	
$V_{I/O}$	Data input/output voltage		0	5.5	V
T_J	Operating junction temperature		–55	125	°C

(1) All unused control inputs of the device must be held at V_{CC} or GND to ensure proper device operation. Refer to the TI application report, *Implications of Slow or Floating CMOS Inputs*, literature number SCBA004.

Copyright © 2013, Texas Instruments Incorporated

ELECTRICAL CHARACTERISTICS[1]

over recommended operating junction temperature range (unless otherwise noted)

PARAMETER		TEST CONDITIONS				MIN	TYP[2]	MAX	UNIT
V_{IK}		V_{CC} = 3.6 V,	I_I = –18 mA					–1.8	V
I_{IN}	Control inputs	V_{CC} = 3.6 V,	V_{IN} = 0 to 5.5 V					±1	μA
I_{OZ} [3]		V_{CC} = 3.6 V,	V_O = 0 to 5.5 V, V_I = 0,	Switch OFF, V_{IN} = V_{CC}				±1	μA
I_{off}		V_{CC} = 0,	V_O = 0 to 5.5 V,	V_I = 0				1	μA
I_{CC}		V_{CC} = 3.6 V,	$I_{I/O}$ = 0, Switch ON or OFF,	V_{IN} = V_{CC} or GND			0.25	0.7	mA
ΔI_{CC} [4]	Control inputs	V_{CC} = 3.6 V,	One input at 3 V,	Other inputs at V_{CC} or GND	T_J = -55°C to 85°C			25	μA
					T_J = 125°C			36	
I_{CCD} [5]	Per control input	V_{CC} = 3.6 V, Control input switching at 50% duty cycle	A and B ports open,				0.03		mA/MHz
C_{in}	Control inputs	V_{CC} = 3.3 V,	V_{IN} = 5.5 V, 3.3 V, or 0				2.5		pF
$C_{io(OFF)}$		V_{CC} = 3.3 V,	Switch OFF, V_{IN} = $V_{CC,}$	$V_{I/O}$ = 5.5 V, 3.3 V, or 0			3.5		pF
$C_{io(ON)}$		V_{CC} = 3.3 V,	Switch ON, V_{IN} = GND,	$V_{I/O}$ = 5.5 V, 3.3 V, or 0			8		pF
r_{on} [6]		V_{CC} = 2.3 V, TYP at V_{CC} = 2.5 V	V_I = 0,	I_O = 30 mA	T_J = -55°C to 85°C		4	8	Ω
					T_J = 125°C			10	
			V_I = 1.7 V,	I_O = –15 mA	T_J = -55°C to 85°C		5	9	
					T_J = 125°C			58	
		V_{CC} = 3 V	V_I = 0,	I_O = 30 mA	T_J = -55°C to 85°C		4	6	
					T_J = 125°C			8	
			V_I = 2.4 V,	I_O = –15 mA	T_J = -55°C to 85°C		5	8	
					T_J = 125°C			66	

(1) V_{IN} and I_{IN} refer to control inputs. V_I, V_O, I_I, and I_O refer to data pins.
(2) All typical values are at V_{CC} = 3.3 V (unless otherwise noted), T_A = 25°C.
(3) For I/O ports, the parameter I_{OZ} includes the input leakage current.
(4) This is the increase in supply current for each input that is at the specified TTL voltage level, rather than V_{CC} or GND.
(5) This parameter specifies the dynamic power-supply current associated with the operating frequency of a single control input (see Figure 4).
(6) Measured by the voltage drop between the A and B terminals at the indicated current through the switch. ON-state resistance is determined by the lower of the voltages of the two (A or B) terminals.

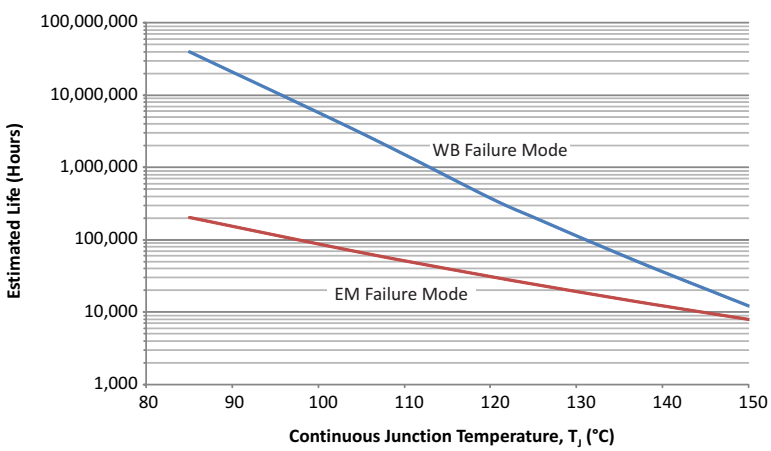

(1) See datasheet for absolute maximum and minimum recommended operating conditions.
(2) Silicon operating life design goal is 10 years at 105°C junction temperature (does not include package interconnect life).
(3) Enhanced plastic product disclaimer applies.

Figure 2. SN74CB3Q3306A-EP Operating Life Derating Chart

SWITCHING CHARACTERISTICS

over recommended operating junction temperature range (unless otherwise noted) (see Figure 5)

PARAMETER		FROM (INPUT)	TO (OUTPUT)	V_{CC} = 2.5 V ± 0.2 V		V_{CC} = 3.3 V ± 0.3 V		UNIT
				MIN	MAX	MIN	MAX	
$f_{\overline{OE}}$ (1)		$\overline{OE}$	A or B		10		20	MHz
t_{pd} (2)	T_J = -55° to 85°C	A or B	B or A		0.2		0.3	ns
	T_J = 125°C				1.2		2.3	
t_{en}		$\overline{OE}$	A or B	1.5	12	1.5	10	ns
t_{dis}		$\overline{OE}$	A or B	1	14	1	9	ns

(1) Maximum switching frequency for control input ($V_O > V_{CC}$, V_I = 5 V, $R_L \geq 1$ MΩ, C_L = 0)
(2) The propagation delay is the calculated RC time constant of the typical ON-state resistance of the switch and the specified load capacitance, when driven by an ideal voltage source (zero output impedance).

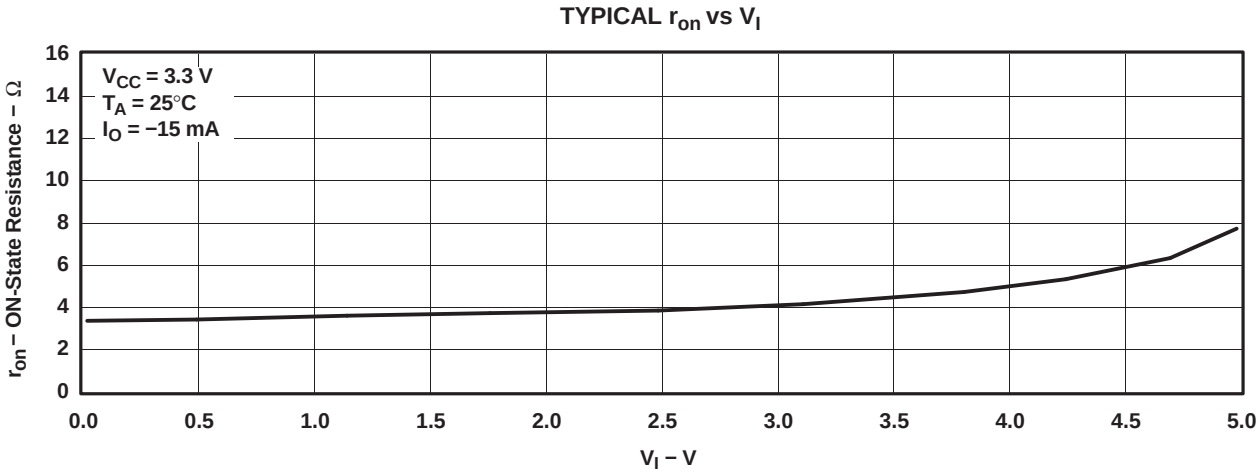

Figure 3. Typical r_{on} vs V_I

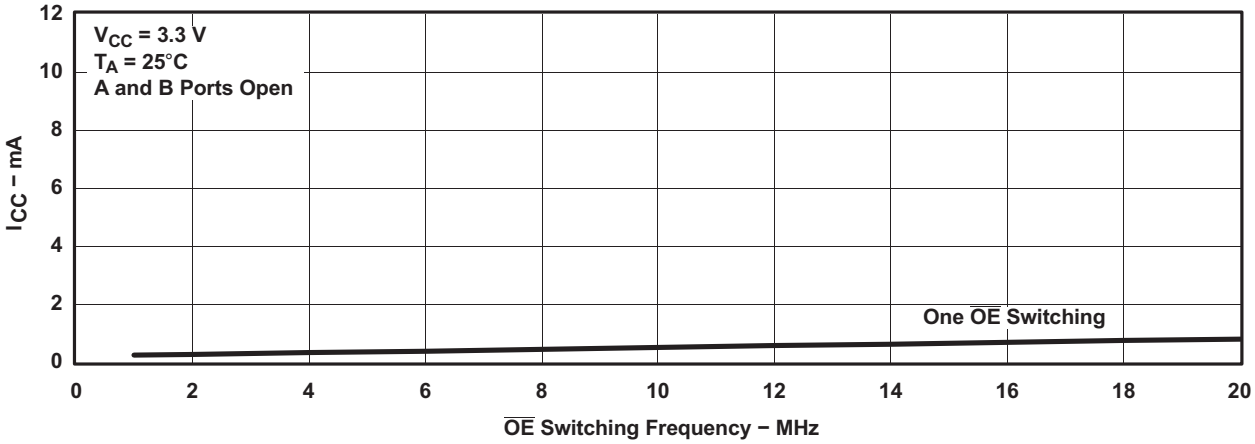

Figure 4. Typical I_{CC} vs $\overline{OE}$ Switching Frequency

Copyright © 2013, Texas Instruments Incorporated

PARAMETER MEASUREMENT INFORMATION

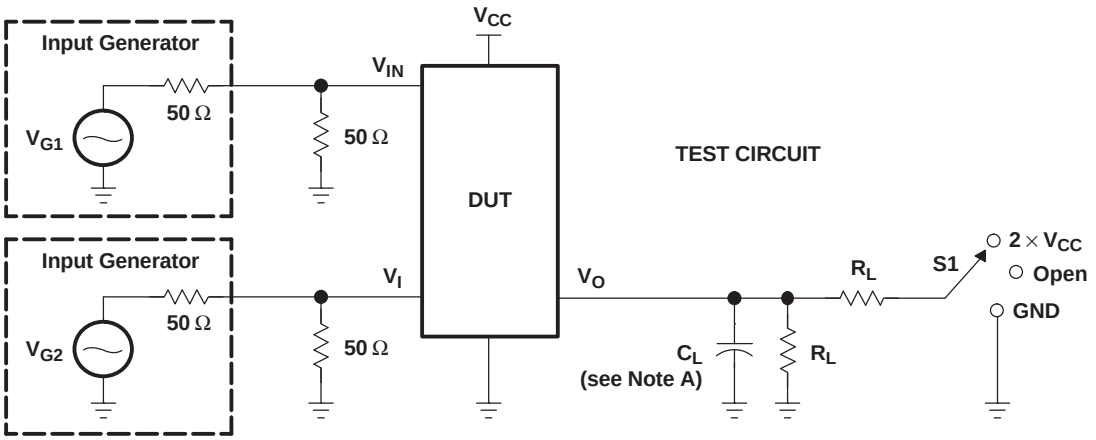

TEST	V_{CC}	S1	R_L	V_I	C_L	V_Δ
$t_{pd(s)}$	2.5 V ± 0.2 V 3.3 V ± 0.3 V	Open Open	500 Ω 500 Ω	V_{CC} or GND V_{CC} or GND	30 pF 50 pF	
t_{PLZ}/t_{PZL}	2.5 V ± 0.2 V 3.3 V ± 0.3 V	2 × V_{CC} 2 × V_{CC}	500 Ω 500 Ω	GND GND	30 pF 50 pF	0.15 V 0.3 V
t_{PHZ}/t_{PZH}	2.5 V ± 0.2 V 3.3 V ± 0.3 V	GND GND	500 Ω 500 Ω	V_{CC} V_{CC}	30 pF 50 pF	0.15 V 0.3 V

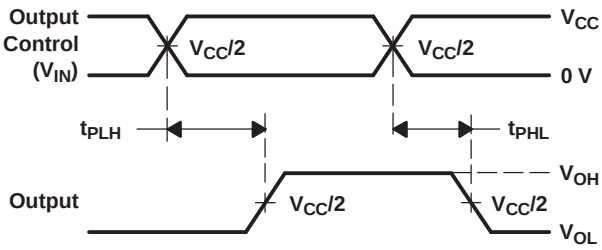

VOLTAGE WAVEFORMS
PROPAGATION DELAY TIMES ($t_{pd(s)}$)

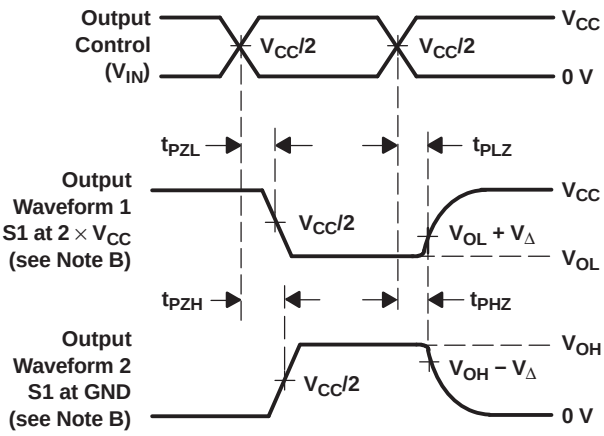

VOLTAGE WAVEFORMS
ENABLE AND DISABLE TIMES

NOTES:
A. C_L includes probe and jig capacitance.
B. Waveform 1 is for an output with internal conditions such that the output is low, except when disabled by the output control. Waveform 2 is for an output with internal conditions such that the output is high, except when disabled by the output control.
C. All input pulses are supplied by generators having the following characteristics: PRR ≤ 10 MHz, Z_O = 50 Ω, t_r ≤ 2.5 ns, t_f ≤ 2.5 ns.
D. The outputs are measured one at a time, with one transition per measurement.
E. t_{PLZ} and t_{PHZ} are the same as t_{dis}.
F. t_{PZL} and t_{PZH} are the same as t_{en}.
G. t_{PLH} and t_{PHL} are the same as $t_{pd(s)}$. The t_{pd} propagation delay is the calculated RC time constant of the typical ON-state resistance of the switch and the specified load capacitance, when driven by an ideal voltage source (zero output impedance).
H. All parameters and waveforms are not applicable to all devices.

Figure 5. Test Circuit and Voltage Waveforms

PACKAGING INFORMATION

Orderable part number	Status (1)	Material type (2)	Package | Pins	Package qty | Carrier	RoHS (3)	Lead finish/ Ball material (4)	MSL rating/ Peak reflow (5)	Op temp (°C)	Part marking (6)
CCB3Q3306AMPWEP	Active	Production	TSSOP (PW) | 8	150 | TUBE	Yes	NIPDAU	Level-1-260C-UNLIM	-55 to 125	U306AM
CCB3Q3306AMPWREP	Active	Production	TSSOP (PW) | 8	2000 | LARGE T&R	Yes	NIPDAU	Level-1-260C-UNLIM	-55 to 125	U306AM
V62/14606-01XE	Active	Production	TSSOP (PW) | 8	2000 | LARGE T&R	Yes	NIPDAU	Level-1-260C-UNLIM	-55 to 125	U306AM
V62/14606-01XE-T	Active	Production	TSSOP (PW) | 8	150 | TUBE	Yes	NIPDAU	Level-1-260C-UNLIM	-55 to 125	U306AM

(1) **Status:** For more details on status, see our product life cycle.

(2) **Material type:** When designated, preproduction parts are prototypes/experimental devices, and are not yet approved or released for full production. Testing and final process, including without limitation quality assurance, reliability performance testing, and/or process qualification, may not yet be complete, and this item is subject to further changes or possible discontinuation. If available for ordering, purchases will be subject to an additional waiver at checkout, and are intended for early internal evaluation purposes only. These items are sold without warranties of any kind.

(3) **RoHS values:** Yes, No, RoHS Exempt. See the TI RoHS Statement for additional information and value definition.

(4) **Lead finish/Ball material:** Parts may have multiple material finish options. Finish options are separated by a vertical ruled line. Lead finish/Ball material values may wrap to two lines if the finish value exceeds the maximum column width.

(5) **MSL rating/Peak reflow:** The moisture sensitivity level ratings and peak solder (reflow) temperatures. In the event that a part has multiple moisture sensitivity ratings, only the lowest level per JEDEC standards is shown. Refer to the shipping label for the actual reflow temperature that will be used to mount the part to the printed circuit board.

(6) **Part marking:** There may be an additional marking, which relates to the logo, the lot trace code information, or the environmental category of the part.

Multiple part markings will be inside parentheses. Only one part marking contained in parentheses and separated by a "~" will appear on a part. If a line is indented then it is a continuation of the previous line and the two combined represent the entire part marking for that device.

Important Information and Disclaimer: The information provided on this page represents TI's knowledge and belief as of the date that it is provided. TI bases its knowledge and belief on information provided by third parties, and makes no representation or warranty as to the accuracy of such information. Efforts are underway to better integrate information from third parties. TI has taken and continues to take reasonable steps to provide representative and accurate information but may not have conducted destructive testing or chemical analysis on incoming materials and chemicals. TI and TI suppliers consider certain information to be proprietary, and thus CAS numbers and other limited information may not be available for release.

In no event shall TI's liability arising out of such information exceed the total purchase price of the TI part(s) at issue in this document sold by TI to Customer on an annual basis.

OTHER QUALIFIED VERSIONS OF SN74CB3Q3306A-EP :

- Catalog : SN74CB3Q3306A

NOTE: Qualified Version Definitions:

- Catalog - TI's standard catalog product

TAPE AND REEL INFORMATION

REEL DIMENSIONS

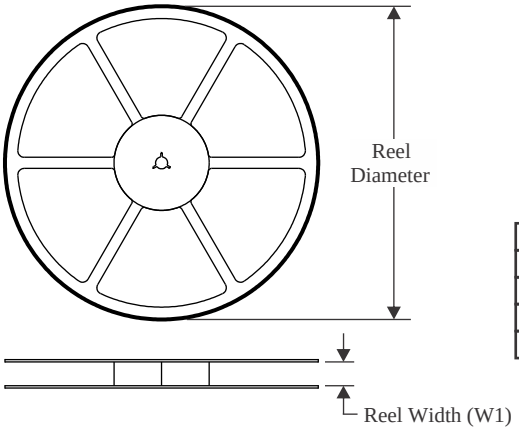

TAPE DIMENSIONS

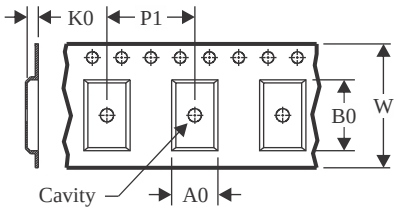

A0	Dimension designed to accommodate the component width
B0	Dimension designed to accommodate the component length
K0	Dimension designed to accommodate the component thickness
W	Overall width of the carrier tape
P1	Pitch between successive cavity centers

QUADRANT ASSIGNMENTS FOR PIN 1 ORIENTATION IN TAPE

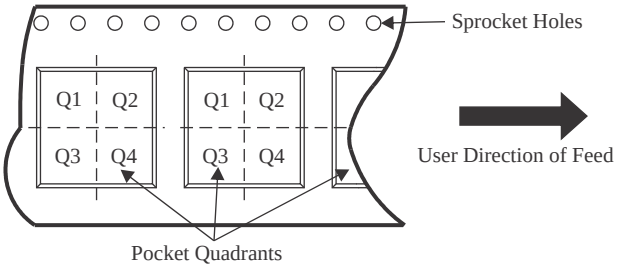

*All dimensions are nominal

Device	Package Type	Package Drawing	Pins	SPQ	Reel Diameter (mm)	Reel Width W1 (mm)	A0 (mm)	B0 (mm)	K0 (mm)	P1 (mm)	W (mm)	Pin1 Quadrant
CCB3Q3306AMPWREP	TSSOP	PW	8	2000	330.0	12.4	7.0	3.6	1.6	8.0	12.0	Q1

TAPE AND REEL BOX DIMENSIONS

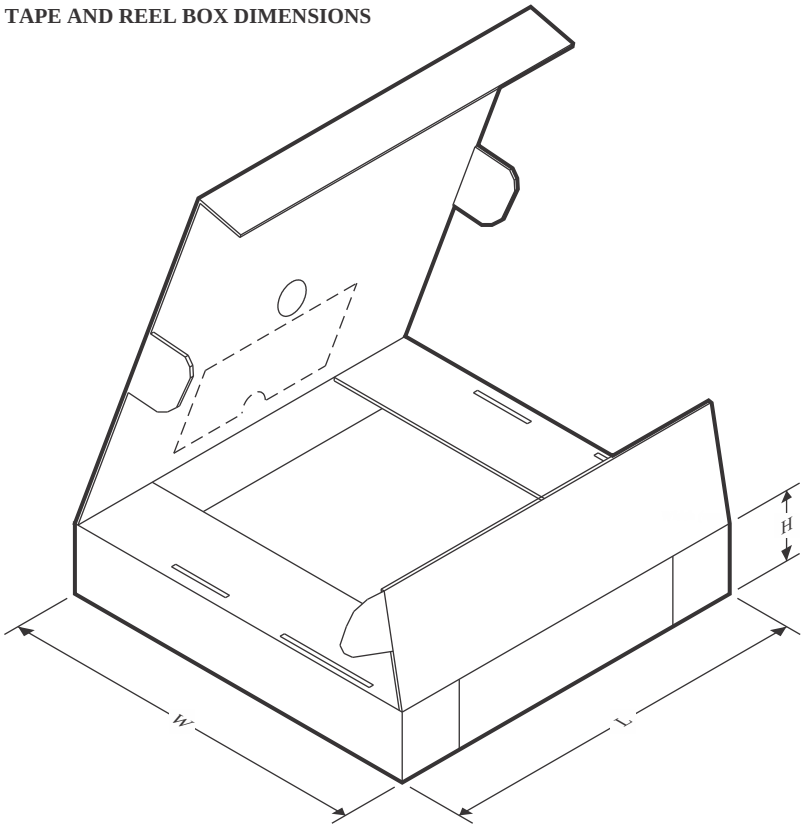

*All dimensions are nominal

Device	Package Type	Package Drawing	Pins	SPQ	Length (mm)	Width (mm)	Height (mm)
CCB3Q3306AMPWREP	TSSOP	PW	8	2000	356.0	356.0	35.0

TUBE

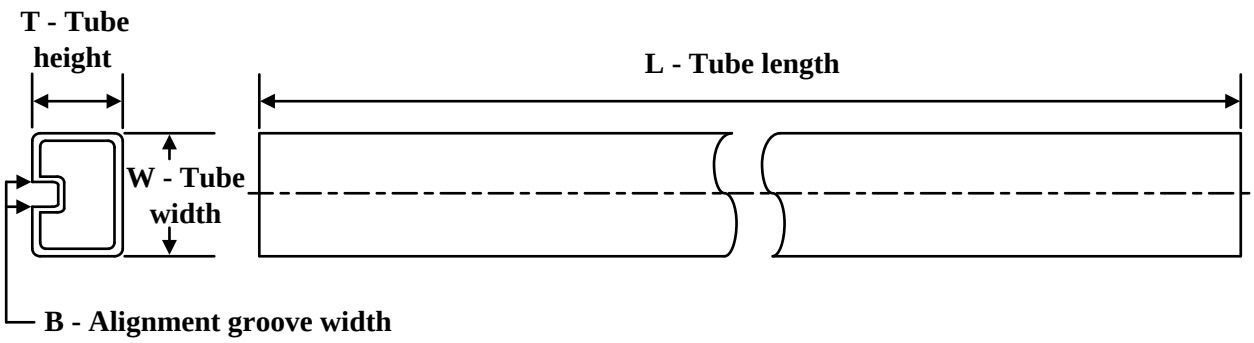

*All dimensions are nominal

Device	Package Name	Package Type	Pins	SPQ	L (mm)	W (mm)	T (µm)	B (mm)
CCB3Q3306AMPWEP	PW	TSSOP	8	150	530	10.2	3600	3.5
V62/14606-01XE-T	PW	TSSOP	8	150	530	10.2	3600	3.5

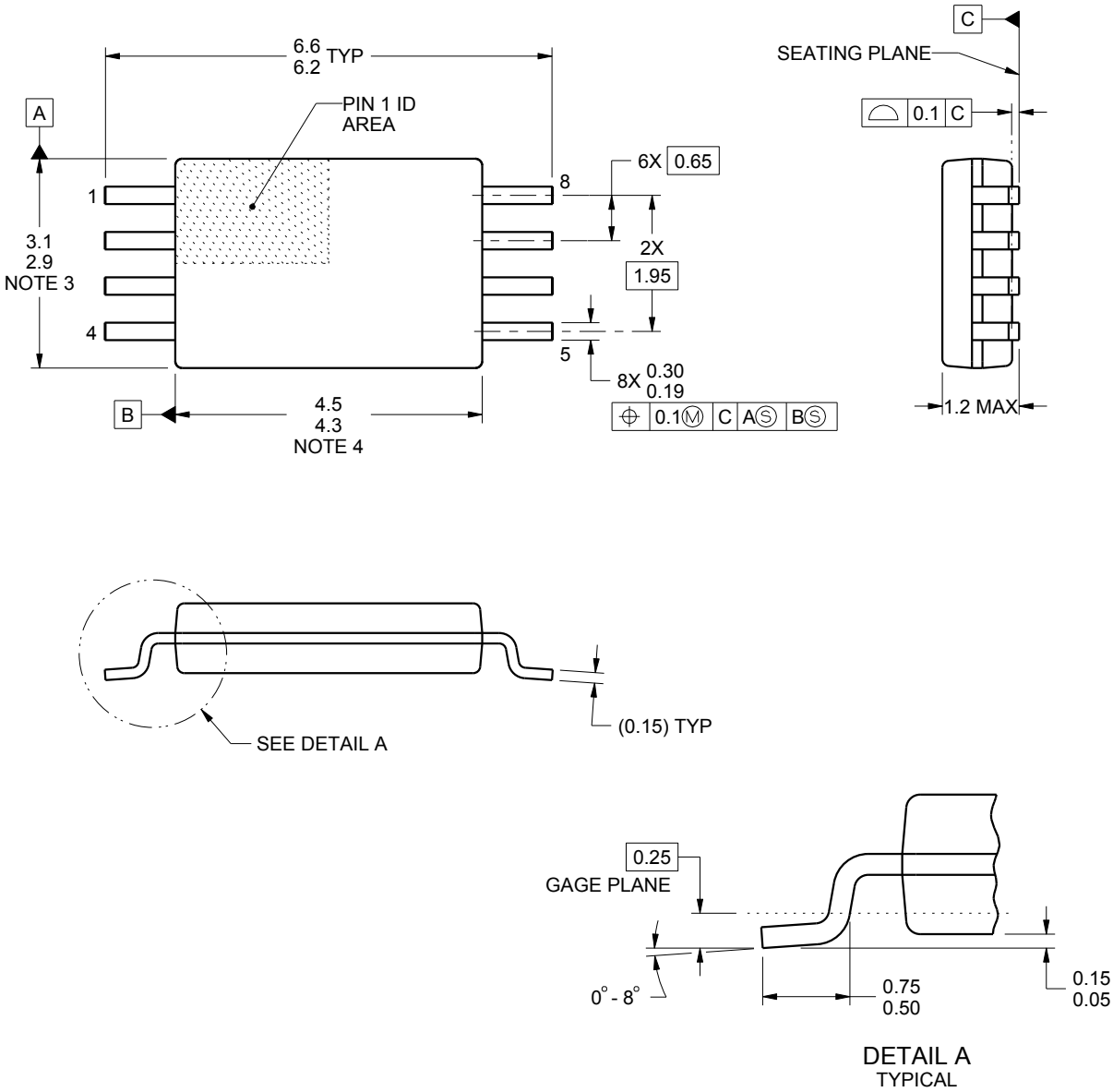

NOTES:

1. All linear dimensions are in millimeters. Any dimensions in parenthesis are for reference only. Dimensioning and tolerancing per ASME Y14.5M.
2. This drawing is subject to change without notice.
3. This dimension does not include mold flash, protrusions, or gate burrs. Mold flash, protrusions, or gate burrs shall not exceed 0.15 mm per side.
4. This dimension does not include interlead flash. Interlead flash shall not exceed 0.25 mm per side.
5. Reference JEDEC registration MO-153, variation AA.

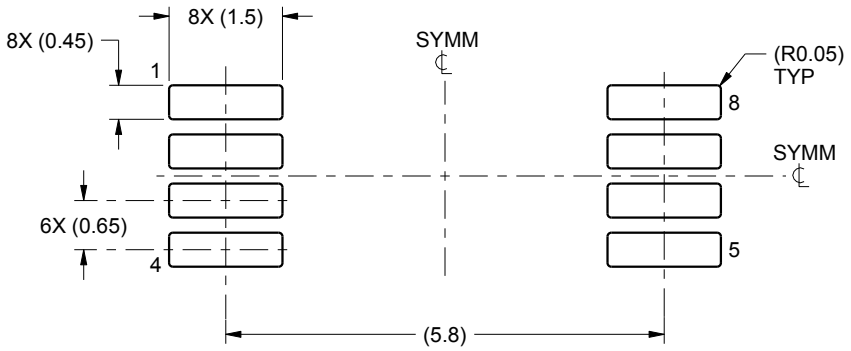

LAND PATTERN EXAMPLE
SCALE:10X

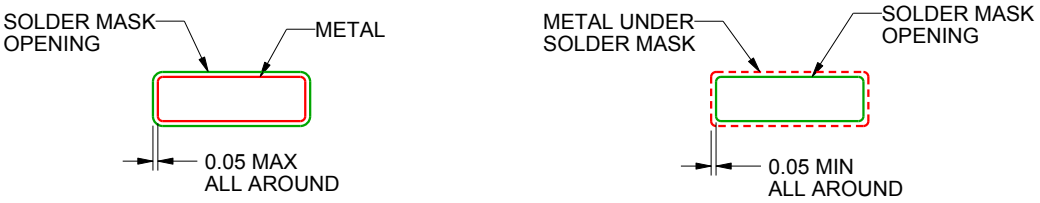

NON SOLDER MASK
DEFINED

SOLDER MASK
DEFINED

SOLDER MASK DETAILS
NOT TO SCALE

4221848/A 02/2015

NOTES: (continued)

6. Publication IPC-7351 may have alternate designs.
7. Solder mask tolerances between and around signal pads can vary based on board fabrication site.

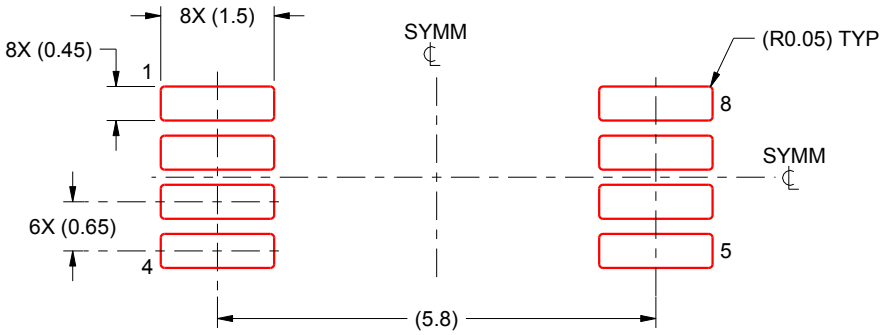

SOLDER PASTE EXAMPLE
BASED ON 0.125 mm THICK STENCIL
SCALE:10X

4221848/A 02/2015

NOTES: (continued)

8. Laser cutting apertures with trapezoidal walls and rounded corners may offer better paste release. IPC-7525 may have alternate design recommendations.
9. Board assembly site may have different recommendations for stencil design.

IMPORTANT NOTICE AND DISCLAIMER

TI PROVIDES TECHNICAL AND RELIABILITY DATA (INCLUDING DATA SHEETS), DESIGN RESOURCES (INCLUDING REFERENCE DESIGNS), APPLICATION OR OTHER DESIGN ADVICE, WEB TOOLS, SAFETY INFORMATION, AND OTHER RESOURCES “AS IS” AND WITH ALL FAULTS, AND DISCLAIMS ALL WARRANTIES, EXPRESS AND IMPLIED, INCLUDING WITHOUT LIMITATION ANY IMPLIED WARRANTIES OF MERCHANTABILITY, FITNESS FOR A PARTICULAR PURPOSE OR NON-INFRINGEMENT OF THIRD PARTY INTELLECTUAL PROPERTY RIGHTS.

These resources are intended for skilled developers designing with TI products. You are solely responsible for (1) selecting the appropriate TI products for your application, (2) designing, validating and testing your application, and (3) ensuring your application meets applicable standards, and any other safety, security, regulatory or other requirements.

These resources are subject to change without notice. TI grants you permission to use these resources only for development of an application that uses the TI products described in the resource. Other reproduction and display of these resources is prohibited. No license is granted to any other TI intellectual property right or to any third party intellectual property right. TI disclaims responsibility for, and you will fully indemnify TI and its representatives against, any claims, damages, costs, losses, and liabilities arising out of your use of these resources.

TI’s products are provided subject to TI’s Terms of Sale or other applicable terms available either on ti.com or provided in conjunction with such TI products. TI’s provision of these resources does not expand or otherwise alter TI’s applicable warranties or warranty disclaimers for TI products.

TI objects to and rejects any additional or different terms you may have proposed.

Mailing Address: Texas Instruments, Post Office Box 655303, Dallas, Texas 75265
Copyright © 2025, Texas Instruments Incorporated