2.7-V TO 5.5-V LOW-POWER DUAL 12-BIT DIGITAL-TO-ANALOG CONVERTER WITH INTERNAL REFERENCE AND POWER DOWN

FEATURES

- **Dual 12-Bit Voltage Output DAC**
- **Programmable Internal Reference**
- **Programmable Settling Time:**
  - **1 µs in Fast Mode,**
  - **3.5 µs in Slow Mode**
- **Compatible With TMS320 and SPI™ Serial Ports**
- **Differential Nonlinearity <0.5 LSB Typ**
- **Monotonic Over Temperature**

APPLICATIONS

- **Digital Servo Control Loops**
- **Digital Offset and Gain Adjustment**
- **Industrial Process Control**
- **Machine and Motion Control Devices**
- **Mass Storage Devices**

D, JG PACKAGE
(TOP VIEW)

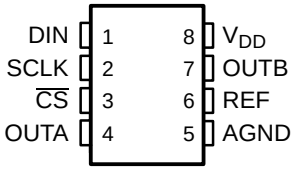

FK PACKAGE
(TOP VIEW)

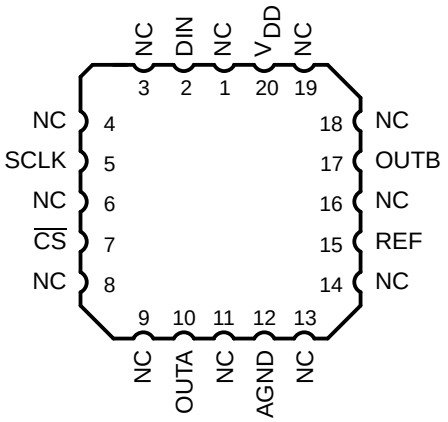

DESCRIPTION

The TLV5638 is a dual 12-bit voltage output DAC with a flexible 3-wire serial interface. The serial interface allows glueless interface to TMS320, SPI™, QSPI™, and Microwire™ serial ports. It is programmed with a 16-bit serial string containing 4 control and 12 data bits.

The resistor string output voltage is buffered by a x2 gain rail-to-rail output buffer. The buffer features a Class AB output stage to improve stability and reduce settling time. The programmable settling time of the DAC allows the designer to optimize speed vs power dissipation. With its on-chip programmable precision voltage reference, the TLV5638 simplifies overall system design.

Because of its ability to source up to 1 mA, the reference can also be used as a system reference. Implemented with a CMOS process, the device is designed for single supply operation from 2.7 V to 5.5 V. It is available in an 8-pin SOIC package to reduce board space in standard commercial, industrial, and automotive temperature ranges. It is also available in JG and FK packages in the military temperature range.

Please be aware that an important notice concerning availability, standard warranty, and use in critical applications of Texas Instruments semiconductor products and disclaimers thereto appears at the end of this data sheet.

SPI, QSPI are trademarks of Motorola, Inc.
Microwire is a trademark of National Semiconductor Corporation.

PRODUCTION DATA information is current as of publication date. Products conform to specifications per the terms of the Texas Instruments standard warranty. Production processing does not necessarily include testing of all parameters.

Copyright © 1999–2004, Texas Instruments Incorporated

This integrated circuit can be damaged by ESD. Texas Instruments recommends that all integrated circuits be handled with appropriate precautions. Failure to observe proper handling and installation procedures can cause damage.

ESD damage can range from subtle performance degradation to complete device failure. Precision integrated circuits may be more susceptible to damage because very small parametric changes could cause the device not to meet its published specifications.

AVAILABLE OPTIONS

T_A	PACKAGE		
	SOIC (D)	CERAMIC DIP (JG)	20 PAD LCCC (FK)
0°C to 70°C	TLV5638CD	—	—
40°C to 85°C	TLV5638ID	—	—
40°C to 125°C	TLV5638QD TLV5638QDR	—	—
55°C to 125°C	—	TLV5638MJG	TLV5638MFK

FUNCTIONAL BLOCK DIAGRAM

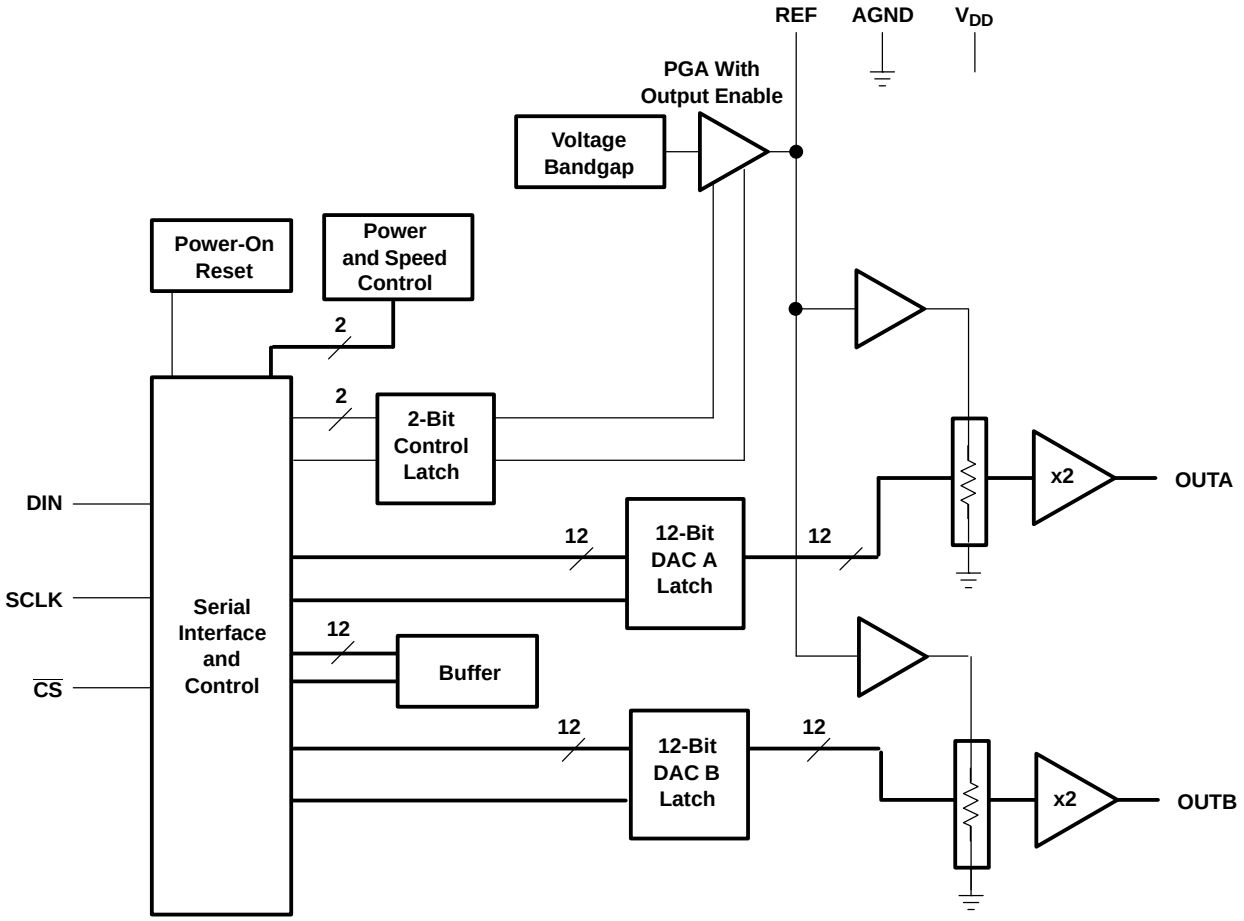

Terminal Functions

TERMINAL NAME	TERMINAL NO.	I/O/P	DESCRIPTION
AGND	5	P	Ground
$\overline{CS}$	3	I	Chip select. Digital input active low, used to enable/disable inputs
DIN	1	I	Digital serial data input
OUT A	4	O	DAC A analog voltage output
OUT B	7	O	DAC B analog voltage output
REF	6	I/O	Analog reference voltage input/output
SCLK	2	I	Digital serial clock input
V_{DD}	8	P	Positive power supply

ABSOLUTE MAXIMUM RATINGS

over operating free-air temperature range (unless otherwise noted)[1]

		UNIT
Supply voltage (V_{DD} to AGND)		7 V
Reference input voltage range		-0.3 V to V_{DD} + 0.3 V
Digital input voltage range		-0.3 V to V_{DD} + 0.3 V
Operating free-air temperature range, T_A	TLV5638C	0°C to 70°C
	TLV5638I	-40°C to 85°C
	TLV5638Q	-40°C to 125°C
	TLV5638M	-55°C to 125°C
Storage temperature range, T_{stg}		-65°C to 150°C
Lead temperature 1,6 mm (1/16 inch) from case for 10 seconds		260°C

(1) Stresses beyond those listed under„ absolute maximum ratings” may cause permanent damage to the device. These are stress ratings only, and functional operation of the device at these or any other conditions beyond those indicated under„ recommended operating conditions” is not implied. Exposure to absolute-maximum-rated conditions for extended periods may affect device reliability.

DISSIPATION RATING TABLE

PACKAGE	$T_A \leq$ 25°C POWER RATING	DERATING FACTOR ABOVE T_A= 25°C[1]	T_A= 70°C POWER RATING	T_A = 85°C POWER RATING	T_A = 125°C POWER RATING
D	635 mW	5.08 mW/°C	407 mW	330 mW	127 mW
FK	1375 mW	11.00 mW/°C	880 mW	715 mW	275 mW
JG	1050 mW	8.40 mW/°C	672 mW	546 mW	210 mW

(1) This is the inverse of the traditional Junction-to-Ambient thermal Resistance ($R\theta_{JA}$). Thermal Resistances are not production tested and are for informational purposes only.

RECOMMENDED OPERATING CONDITIONS

			MIN	NOM	MAX	UNIT
Supply voltage, V_{DD}	V_{DD} = 5 V		4.5	5	5.5	V
	V_{DD} = 3 V		2.7	3	3.3	V
Power on reset, POR			0.55 (1)		2 (1)	V
High-level digital input voltage, V_{IH}	V_{DD} = 2.7 V		2			V
	V_{DD} = 5.5 V		2.4			
Low-level digital input voltage, V_{IL}	V_{DD} = 2.7 V				0.6	V
	V_{DD} = 5.5 V	TLV5638C and TLV5638I			1	V
		TLV5638Q and TLV5638M			0.8	
Reference voltage, V_{ref} to REF terminal	V_{DD} = 5 V (2)		AGND	2.048	V_{DD}-1.5	V
Reference voltage, V_{ref} to REF terminal	V_{DD} = 3 V (2)		AGND	1.024	V_{DD}-1.5	V
Load resistance, R_L			2			kΩ
Load capacitance, C_L					100	pF
Clock frequency, f_{CLK}					20	MHz
Operating free-air temperature, T_A	TLV5638C		0		70	°C
	TLV5638I		40		85	
	TLV5638Q		40		125	
	TLV5638M		55		125	

(1) This parameter is not tested for Q and M suffix devices.
(2) Due to the x2 output buffer, a reference input voltage ≥ (V_{DD}-0.4 V)/2 causes clipping of the transfer function. The output buffer of the internal reference must be disabled, if an external reference is used.

ELECTRICAL CHARACTERISTICS

over recommended operating conditions, V_{ref} = 2.048 V, V_{ref}= 1.024 V (unless otherwise noted)

POWER SUPPLY							
PARAMETER		TEST CONDITIONS			TLV5638C, I TLV5638M		UNIT
					MIN	TYP	MAX	
I_{DD}	Power supply current	No load, All inputs = AGND or V_{DD}, DAC latch = 0x800	V_{DD}= 5 V, Int. ref.	Fast		4.3	7	mA
				Slow		2.2	3.6	
			V_{DD} = 3 V, Int. ref.	Fast		3.8	6.3	mA
				Slow		1.8	3.0	
			V_{DD} = 5 V, Ext. ref.	Fast		3.9	6.3	mA
				Slow		1.8	3.0	
			V_{DD} = 3 V, Ext. ref.	Fast		3.5	5.7	mA
				Slow		1.5	2.6	
	Power-down supply current					0.01	10	µA
PSRR	Power supply rejection ratio	Zero scale, (1)				65		dB
		Full scale, (2)				65		

(1) Power supply rejection ratio at zero scale is measured by varying V_{DD} and is given by: PSRR = 20 log [(E_{ZS}(V_{DD}max) - E_{ZS}(V_{DD}min))/V_{DD}max]
(2) Power supply rejection ratio at full scale is measured by varying V_{DD} and is given by: PSRR = 20 log [(E_G(V_{DD}max) - E_G(V_{DD}min))/V_{DD}max]

ELECTRICAL CHARACTERISTICS (Continued)

over recommended operating conditions, V_{ref} = 2.048 V, V_{ref}= 1.024 V (unless otherwise noted)

STATIC DAC SPECIFICATIONS							
PARAMETER		TEST CONDITIONS		MIN	TYP	MAX	UNIT
	Resolution			12			bits
INL	Integral nonlinearity, end point adjusted	See (1)	C and I suffixes		±1.7	±4	LSB
			Q and M suffixes		±1.7	±6	LSB
DNL	Differential nonlinearity	See (2)			±0.4	±1	LSB
E_{ZS}	Zero-scale error (offset error at zero scale)	See (3)				±24	mV
$E_{ZS}TC$	Zero-scale-error temperature coefficient	See (4)			10		ppm/°C
E_G	Gain error	See(5)				±0.6	% full scale V
E_GT_C	Gain error temperature coefficient	See (6)			10		ppm/°C
OUTPUT SPECIFICATIONS							
V_O	Output voltage	R_L= 10 kΩ		0		V_{DD}-0.4	V
	Output load regulation accuracy	V_O = 4.096 V, 2.048 V, R_L= 2 kΩ				±0.25	% full scale V
REFERENCE PIN CONFIGURED AS OUTPUT (REF)							
Vref(OUTL)	Low reference voltage			1.003	1.024	1.045	V
Vref(OUTH)	High reference voltage	V_{DD} > 4.75 V		2.027	2.048	2.069	V
Iref(source)	Output source current					1	mA
Iref(sink)	Output sink current			-1			mA
	Load capacitance					100	pF
PSRR	Power supply rejection ratio				-65		dB
REFERENCE PIN CONFIGURED AS INPUT (REF)							
V_I	Input voltage			0		V_{DD}-1.5	V
R_I	Input resistance				10		MΩ
C_I	Input capacitance				5		pF
	Reference input bandwidth	REF = 0.2 V_{pp} + 1.024 V dc	Fast		1.3		MHz
			Slow		525		kHz
	Reference feedthrough	REF = 1 V_{pp} at 1.024 V dc(7)			-80		dB
DIGITAL INPUTS							
I_{IH}	HIgh-level digital input current	V_I = V_{DD}				1	µA
I_{IL}	Low-level digital input current	V_I = 0 V		-1			µA
C_i	Input capacitance				8		pF

(1) The relative accuracy or integral nonlinearity (INL) sometimes referred to as linearity error, is the maximum deviation of the output from the line between zero and full scale excluding the effects of zero code and full-scale errors. Tested from code 32 to 4095.
(2) The differential nonlinearity (DNL) sometimes referred to as differential error, is the difference between the measured and ideal 1 LSB amplitude change of any two adjacent codes. Monotonic means the output voltage changes in the same direction (or remains constant) as a change in the digital input code.
(3) Zero-scale error is the deviation from zero voltage output when the digital input code is zero.
(4) Zero-scale-error temperature coefficient is given by: E_{ZS} TC = [E_{ZS} (T_{max}) - E_{ZS} (T_{min})]/V_{ref}× 10^6/(T_{max} - T_{min}).
(5) Gain error is the deviation from the ideal output (2V_{ref} - 1 LSB) with an output load of 10 kΩ excluding the effects of the zero-error.
(6) Gain temperature coefficient is given by: E_G TC = [E_G(T_{max}) - E_G (T_{min})]/V_{ref}× 10^6/(T_{max} - T_{min}).
(7) Reference feedthrough is measured at the DAC output with an input code = 0x000.

ELECTRICAL CHARACTERISTICS (Continued)

over recommended operating conditions, V_{ref} = 2.048 V, V_{ref}= 1.024 V (unless otherwise noted)

ANALOG OUTPUT DYNAMIC PERFORMANCE							
PARAMETER		TEST CONDITIONS		MIN	TYP	MAX	UNIT
$t_{s(FS)}$	Output settling time, full scale	R_L = 10 kΩ, C_L = 100 pF, See (1)	Fast		1	3	µs
			Slow		3.5	7	
$t_{s(CC)}$	Output settling time, code to code	R_L = 10 kΩ, C_L = 100 pF, See (2)	Fast		0.5	1.5	µs
			Slow		1	2	
SR	Slew rate	R_L = 10 kΩ, C_L = 100 pF, See (3)	Fast		12		V/µs
			Slow		1.8		
	Glitch energy	DIN = 0 to 1, FCLK = 100 kHz, $\overline{CS}$ = V_{DD}			5		nV-s
SNR	Signal-to-noise ratio	f_s = 480 kSPS, f_{out} = 1 kHz, R_L = 10 kΩ, C_L = 100 pF		69	74		dB
S/(N+D)	Signal-to-noise + distortion			58	67		
THD	Total harmonic distortion				69	57	
	Spurious free dynamic range			57	72		

(1) Settling time is the time for the output signal to remain within ±0.5 LSB of the final measured value for a digital input code change of 0x020 to 0xFDF and 0xFDF to 0x020 respectively. Not tested, assured by design.
(2) Settling time is the time for the output signal to remain within ± 0.5 LSB of the final measured value for a digital input code change of one count. Not tested, assured by design.
(3) Slew rate determines the time it takes for a change of the DAC output from 10% to 90% full-scale voltage.

DIGITAL INPUT TIMING REQUIREMENTS

		MIN	NOM	MAX	UNIT
$t_{su(CS-CK)}$	Setup time, $\overline{CS}$ low before first negative SCLK edge	10			ns
$t_{su(C16-CS)}$	Setup time, 16th negative SCLK edge (when D0 is sampled) before $\overline{CS}$ rising edge	10			ns
t_{wH}	SCLK pulse width high	25			ns
t_{wL}	SCLK pulse width low	25			ns
$t_{su(D)}$	Setup time, data ready before SCLK falling edge	10			ns
$t_{h(D)}$	Hold time, data held valid after SCLK falling edge	5			ns

PARAMETER MEASURMENT INFORMATION

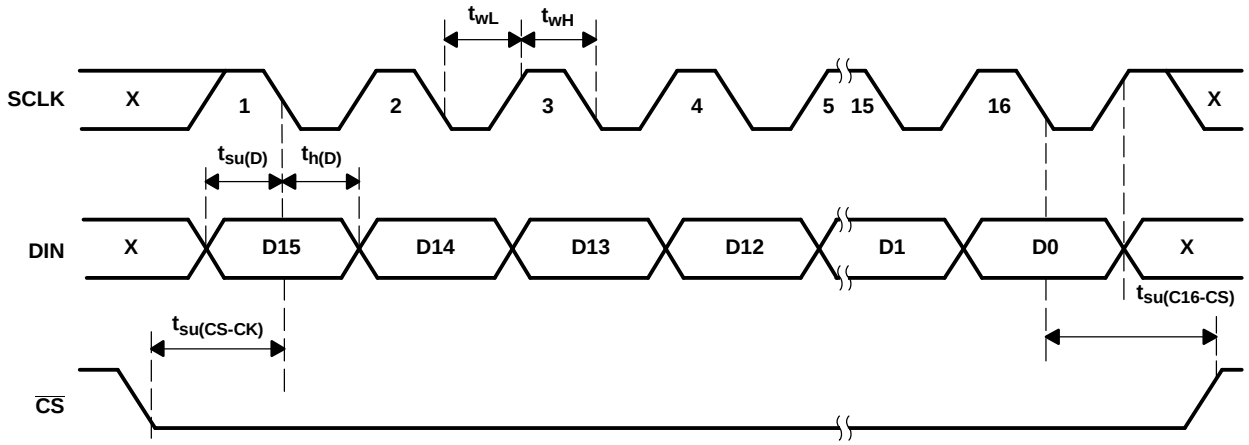

Figure 1. Timing Diagram

TYPICAL CHARACTERISTICS

POWER DOWN SUPPLY CURRENT vs TIME

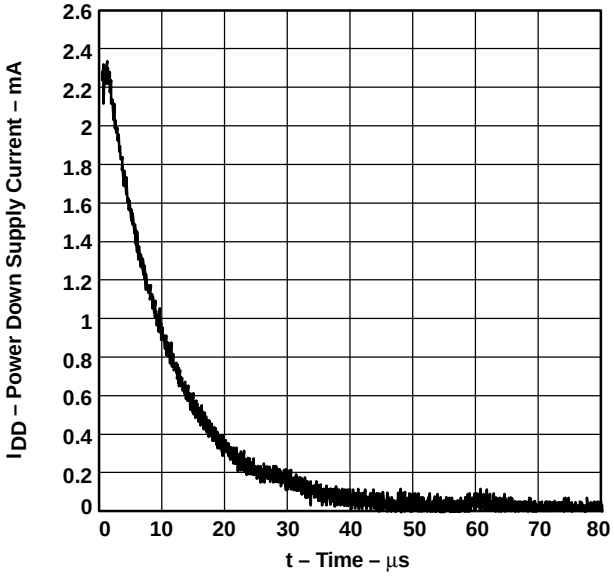

Figure 2.

SUPPLY CURRENT vs FREE-AIR TEMPERATURE

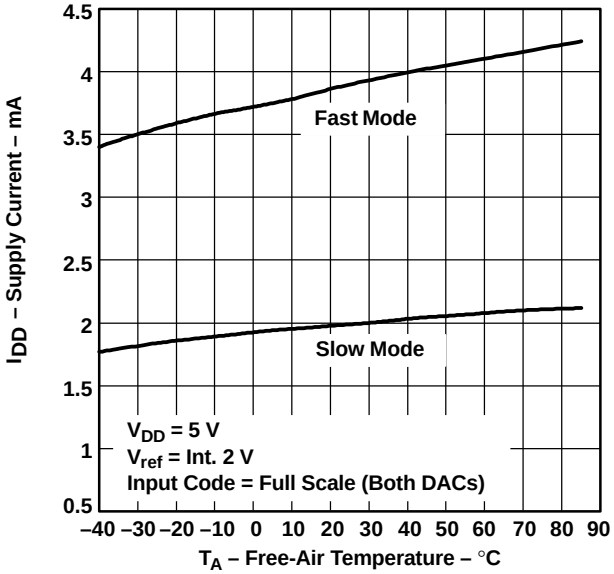

Figure 3.

SUPPLY CURRENT vs FREE-AIR TEMPERATURE

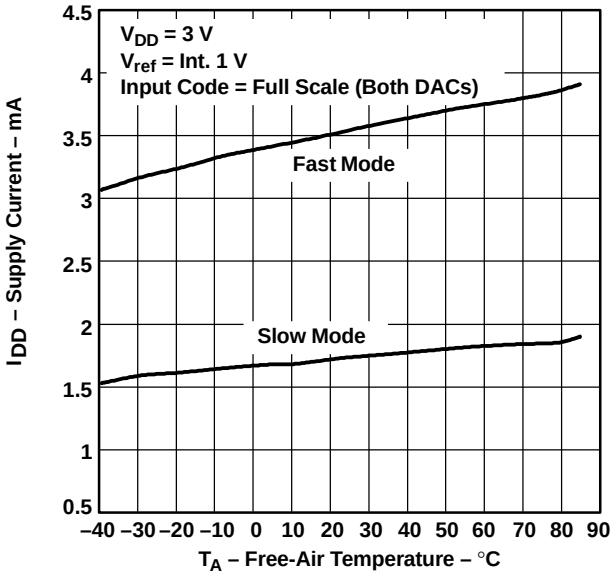

Figure 4.

OUTPUT VOLTAGE vs LOAD CURRENT

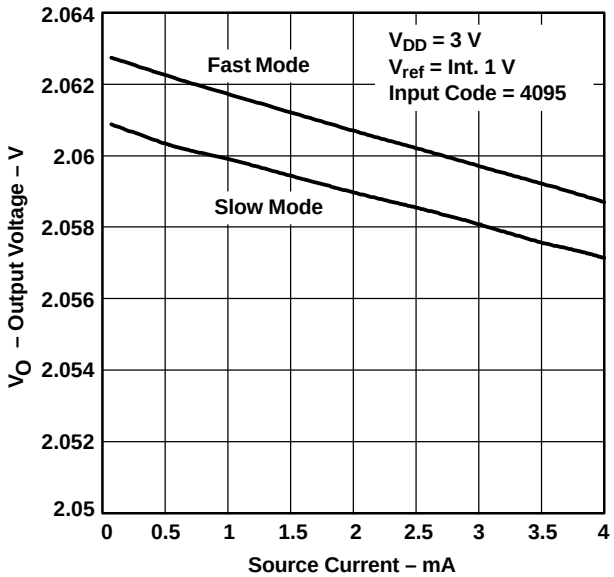

Figure 5.

TYPICAL CHARACTERISTICS (continued)

OUTPUT VOLTAGE vs LOAD CURRENT

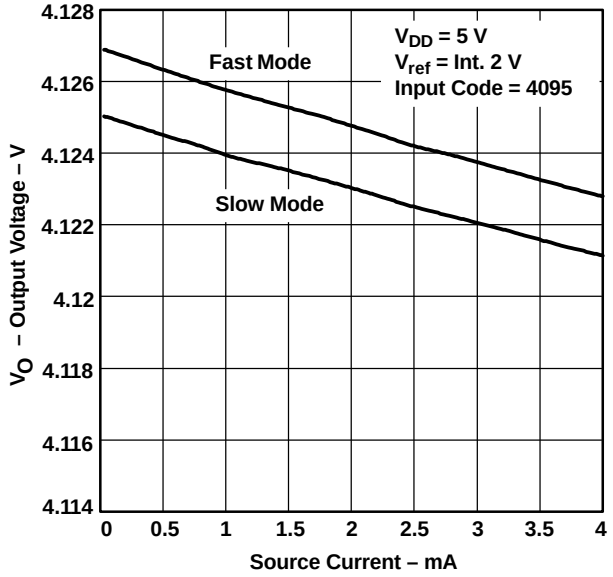

Figure 6.

OUTPUT VOLTAGE vs LOAD CURRENT

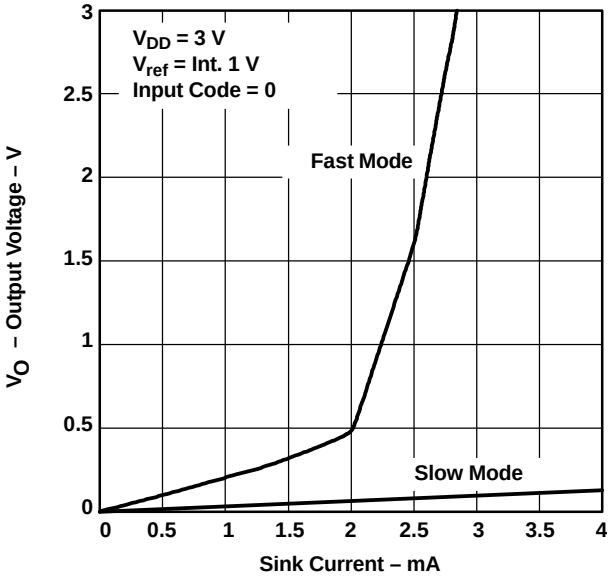

Figure 7.

OUTPUT VOLTAGE vs LOAD CURRENT

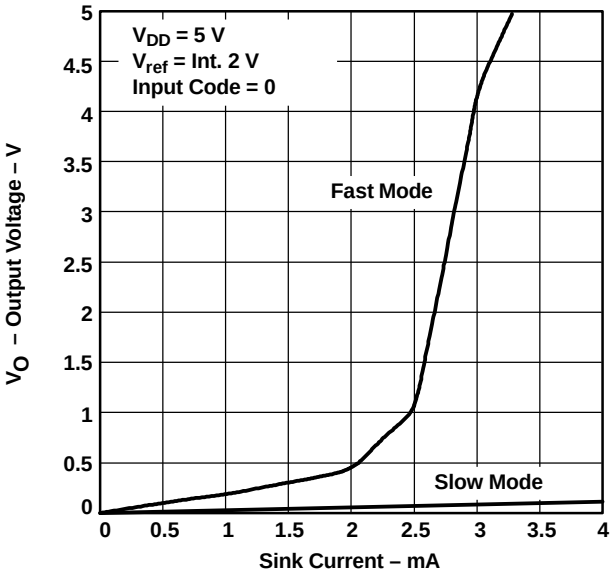

Figure 8.

TOTAL HARMONIC DISTORTION AND NOISE vs FREQUENCY

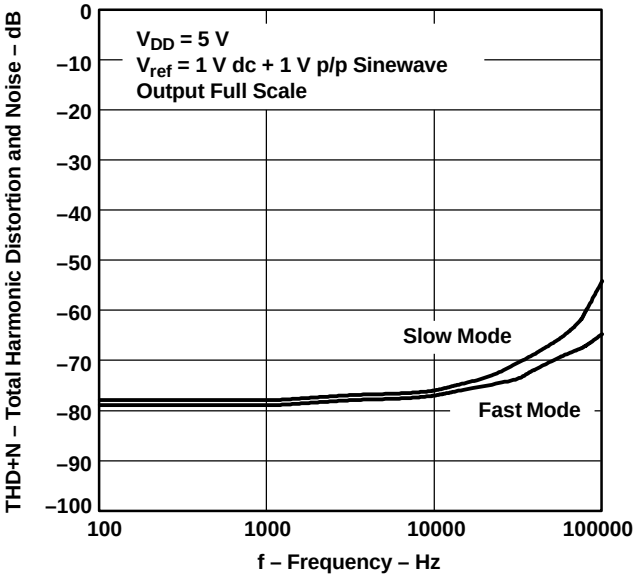

Figure 9.

TYPICAL CHARACTERISTICS (continued)

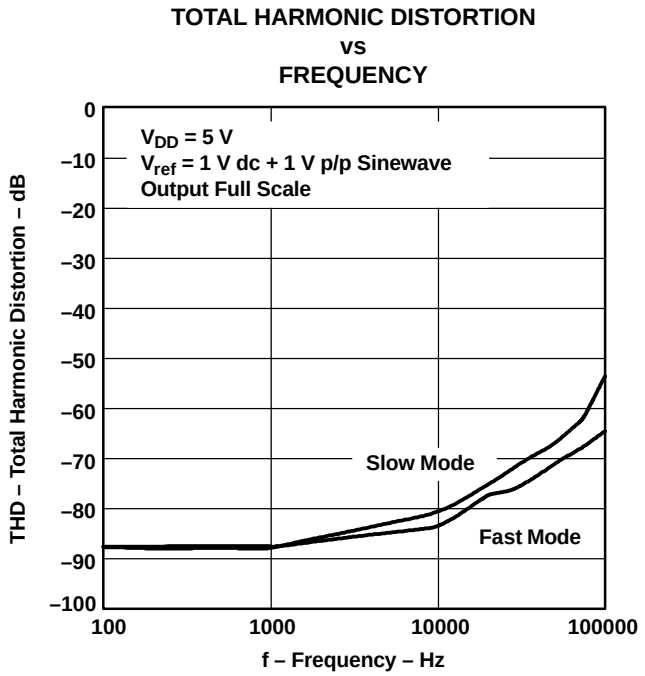

Figure 10.

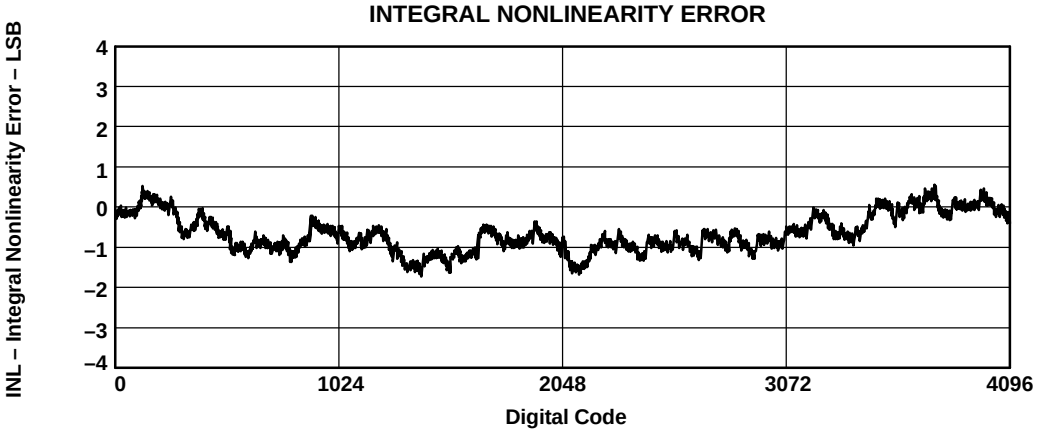

Figure 11.

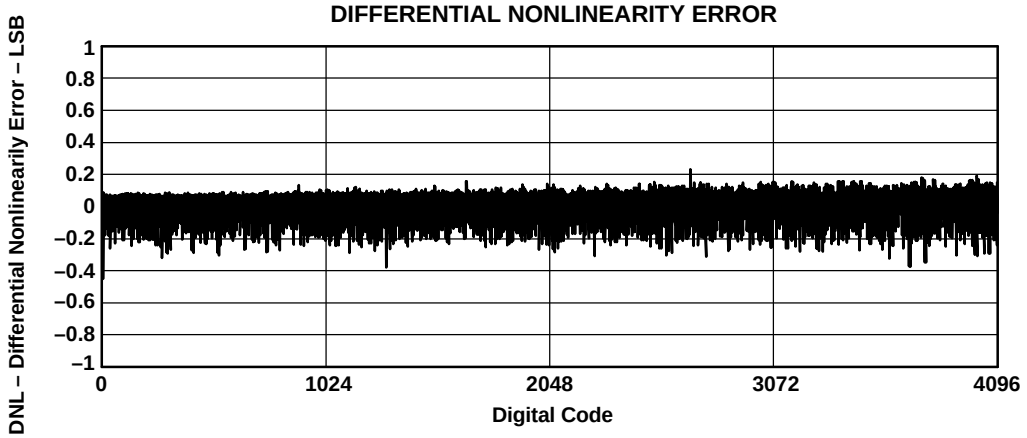

Figure 12.

APPLICATION INFORMATION

GENERAL FUNCTION

The TLV5638 is a dual 12-bit, single supply DAC, based on a resistor string architecture. It consists of a serial interface, a speed and power-down control logic, a programmable internal reference, a resistor string, and a rail-to-rail output buffer.

The output voltage (full scale determined by reference) is given by:

$$2\ \text{REF}\ \frac{\text{CODE}}{\text{0x1000}}\ [\text{V}]$$

Where REF is the reference voltage and CODE is the digital input value in the range 0x000 to 0xFFF. A power on reset initially puts the internal latches to a defined state (all bits zero).

SERIAL INTERFACE

A falling edge of $\overline{\text{CS}}$ starts shifting the data bit-per-bit (starting with the MSB) to the internal register on the falling edges of SCLK. After 16 bits have been transferred or $\overline{\text{CS}}$ rises, the content of the shift register is moved to the target latches (DAC A, DAC B, BUFFER, CONTROL), depending on the control bits within the data word.

Figure 13 shows examples of how to connect the TLV5638 to TMS320, SPI™, and Microwire™.

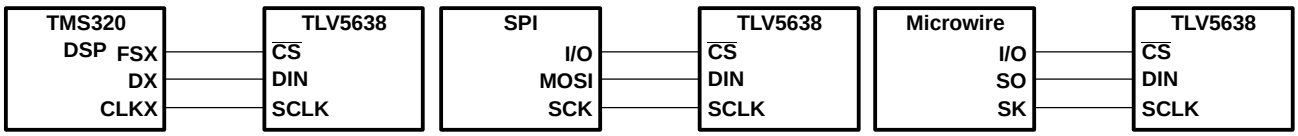

Figure 13. Three-Wire Interface

Notes on SPI™ and Microwire™: Before the controller starts the data transfer, the software has to generate a falling edge on the pin connected to $\overline{\text{CS}}$. If the word width is 8 bits (SPI™ and Microwire™), two write operations must be performed to program the TLV5638. After the write operation(s), the holding registers or the control register are updated automatically on the 16th positive clock edge.

SERIAL CLOCK FREQUENCY AND UPDATE RATE

The maximum serial clock frequency is given by:

$$f_{sclkmax} = \frac{1}{t_{whmin} + t_{wlmin}} = 20\ \text{MHz}$$

The maximum update rate is:

$$f_{updatemax} = \frac{1}{16\left(t_{whmin} + t_{wlmin}\right)} = 1.25\ \text{MHz}$$

Note, that the maximum update rate is just a theoretical value for the serial interface, as the settling time of the TLV5638 has to be considered, too.

APPLICATION INFORMATION (continued)

DATA FORMAT

The 16-bit data word for the TLV5638 consists of two parts:

- Program bits (D15..D12)
- New data (D11..D0)

D15	D14	D13	D12	D11	D10	D9	D8	D7	D6	D5	D4	D3	D2	D1	D0
R1	SPD	PWR	R0	12 Data bits											

SPD: Speed control bit 1 → fast mode 0 → slow mode

PWR: Power control bit 1 → power down 0 → normal operation

The following table lists the possible combination of the register select bits:

REGISTERED SELECT BITS

R1	R0	REGISTER
0	0	Write data to DAC B and BUFFER
0	1	Write data to BUFFER
1	0	Write data to DAC A and update DAC B with BUFFER content
1	1	Write data to control register

The meaning of the 12 data bits depends on the register. If one of the DAC registers or the BUFFER is selected, then the 12 data bits determine the new DAC value:

DATA BITS: DAC A, DAC B and BUFFER

D11	D10	D9	D8	D7	D6	D5	D4	D3	D2	D1	D0
New DAC Value											

If control is selected, then D1, D0 of the 12 data bits are used to program the reference voltage:

DATA BITS: CONTROL

D11	D10	D9	D8	D7	D6	D5	D4	D3	D2	D1	D0
X	X	X	X	X	X	X	X	X	X	REF1	REF0

REF1 and REF0 determine the reference source and, if internal reference is selected, the reference voltage.

REFERENCE BITS

REF1	REF0	REFERENCE
0	0	External
0	1	1.024 V
1	0	2.048 V
1	1	External

CAUTION:

If external reference voltage is applied to the REF pin, external reference MUST be selected.

EXAMPLES OF OPERATION:

1. Set DAC A output, select fast mode, select internal reference at 2.048 V:
   a. Set reference voltage to 2.048 V (CONTROL register)

D15	D14	D13	D12	D11	D10	D9	D8	D7	D6	D5	D4	D3	D2	D1	D0
1	1	0	1	0	0	0	0	0	0	0	0	0	0	1	0

   b. Write new DAC A value and update DAC A output:

D15	D14	D13	D12	D11	D10	D9	D8	D7	D6	D5	D4	D3	D2	D1	D0
1	1	0	0	New DAC A output value											

   The DAC A output is updated on the rising clock edge after D0 is sampled.

   To output data consecutively using the same DAC configuration, it is not necessary to program the CONTROL register again.

2. Set DAC B output, select fast mode, select external reference:
   a. Select external reference (CONTROL register):

D15	D14	D13	D12	D11	D10	D9	D8	D7	D6	D5	D4	D3	D2	D1	D0
1	1	0	1	0	0	0	0	0	0	0	0	0	0	0	0

   b. Write new DAC B value to BUFFER and update DAC B output:

D15	D14	D13	D12	D11	D10	D9	D8	D7	D6	D5	D4	D3	D2	D1	D0
0	1	0	0	New BUFFER content and DAC B output value											

   The DAC A output is updated on the rising clock edge after D0 is sampled.

   To output data consecutively using the same DAC configuration, it is not necessary to program the CONTROL register again.

3. Set DAC A value, set DAC B value, update both simultaneously, select slow mode, select internal reference at 1.024 V:
   a. Set reference voltage to 1.024 V (CONTROL register)

D15	D14	D13	D12	D11	D10	D9	D8	D7	D6	D5	D4	D3	D2	D1	D0
1	0	0	1	0	0	0	0	0	0	0	0	0	0	0	1

   b. Write data for DAC B to BUFFER:

D15	D14	D13	D12	D11	D10	D9	D8	D7	D6	D5	D4	D3	D2	D1	D0
0	0	0	1	New DAC B value											

   c. Write new DAC A value and update DAC A and B simultaneously:

D15	D14	D13	D12	D11	D10	D9	D8	D7	D6	D5	D4	D3	D2	D1	D0
1	0	0	0	New DAC A value											

   Both outputs are updated on the rising clock edge after D0 from the DAC A data word is sampled.

   To output data consecutively using the same DAC configuration, it is not necessary to program the CONTROL register again.

1. Set power-down mode:

D15	D14	D13	D12	D11	D10	D9	D8	D7	D6	D5	D4	D3	D2	D1	D0
X	X	1	X	X	X	X	X	X	X	X	X	X	X	X	X

X = Don't care

LINEARITY, OFFSET, AND GAIN ERROR USING SINGLE ENDED SUPPLIES

When an amplifier is operated from a single supply, the voltage offset can still be either positive or negative. With a positive offset, the output voltage changes on the first code change. With a negative offset, the output voltage may not change with the first code, depending on the magnitude of the offset voltage.

The output amplifier attempts to drive the output to a negative voltage. However, because the most negative supply rail is ground, the output cannot drive below ground and clamps the output at 0 V.

The output voltage then remains at zero until the input code value produces a sufficient positive output voltage to overcome the negative offset voltage, resulting in the transfer function shown in Figure 14.

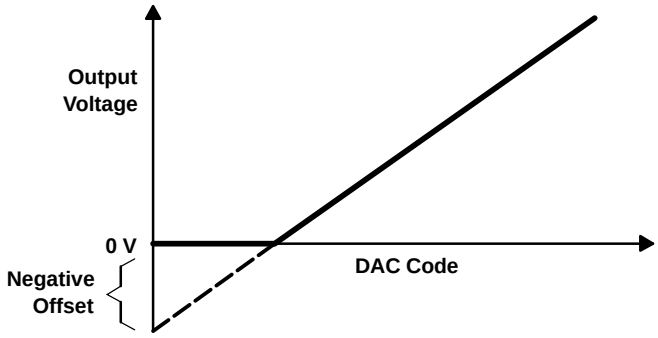

Figure 14. Effect of Negative Offset (Single Supply)

This offset error, not the linearity error, produces this breakpoint. The transfer function would have followed the dotted line if the output buffer could drive below the ground rail.

For a DAC, linearity is measured between zero-input code (all inputs 0) and full-scale code (all inputs 1) after offset and full scale are adjusted out or accounted for in some way. However, single supply operation does not allow for adjustment when the offset is negative due to the breakpoint in the transfer function. So the linearity is measured between full-scale code and the lowest code that produces a positive output voltage.

DEFINITIONS OF SPECIFICATIONS AND TERMINOLOGY

Integral Nonlinearity (INL)

The relative accuracy or integral nonlinearity (INL), sometimes referred to as linearity error, is the maximum deviation of the output from the line between zero and full scale excluding the effects of zero code and full-scale errors.

Differential Nonlinearity (DNL)

The differential nonlinearity (DNL), sometimes referred to as differential error, is the difference between the measured and ideal 1 LSB amplitude change of any two adjacent codes. Monotonic means the output voltage changes in the same direction (or remains constant) as a change in the digital input code.

Zero-Scale Error (E_{ZS})

Zero-scale error is defined as the deviation of the output from 0 V at a digital input value of 0.

Gain Error (E_G)

Gain error is the error in slope of the DAC transfer function.

Total Harmonic Distortion (THD)

THD is the ratio of the rms value of the first six harmonic components to the value of the fundamental signal. The value for THD is expressed in decibels.

Signal-to-Noise Ratio + Distortion (S/N+D)

S/N+D is the ratio of the rms value of the output signal to the rms sum of all other spectral components below the Nyquist frequency, including harmonics but excluding dc. The value for S/N+D is expressed in decibels.

Spurious Free Dynamic Range (SFDR)

Spurious free dynamic range is the difference between the rms value of the output signal and the rms value of the largest spurious signal within a specified bandwidth. The value for SFDR is expressed in decibels.

PACKAGING INFORMATION

Orderable part number	Status (1)	Material type (2)	Package | Pins	Package qty | Carrier	RoHS (3)	Lead finish/ Ball material (4)	MSL rating/ Peak reflow (5)	Op temp (°C)	Part marking (6)
5962-9957601Q2A	Active	Production	LCCC (FK) | 20	55 | TUBE	ROHS Exempt	SNPB	N/A for Pkg Type	-55 to 125	5962-9957601Q2A TLV5638 MFKB
5962-9957601QPA	Active	Production	CDIP (JG) | 8	50 | TUBE	No	SNPB	N/A for Pkg Type	-55 to 125	9957601QPA TLV5638M
TLV5638CD	Active	Production	SOIC (D) | 8	75 | TUBE	Yes	NIPDAU	Level-1-260C-UNLIM	0 to 70	5638C
TLV5638CD.A	Active	Production	SOIC (D) | 8	75 | TUBE	Yes	NIPDAU	Level-1-260C-UNLIM	0 to 70	5638C
TLV5638CDG4	Active	Production	SOIC (D) | 8	75 | TUBE	Yes	NIPDAU	Level-1-260C-UNLIM	0 to 70	5638C
TLV5638CDR	Active	Production	SOIC (D) | 8	2500 | LARGE T&R	Yes	NIPDAU	Level-1-260C-UNLIM	0 to 70	5638C
TLV5638CDR.A	Active	Production	SOIC (D) | 8	2500 | LARGE T&R	Yes	NIPDAU	Level-1-260C-UNLIM	0 to 70	5638C
TLV5638CDRG4	Active	Production	SOIC (D) | 8	2500 | LARGE T&R	Yes	NIPDAU	Level-1-260C-UNLIM	0 to 70	5638C
TLV5638ID	Active	Production	SOIC (D) | 8	75 | TUBE	Yes	NIPDAU	Level-1-260C-UNLIM	-40 to 85	5638I
TLV5638ID.A	Active	Production	SOIC (D) | 8	75 | TUBE	Yes	NIPDAU	Level-1-260C-UNLIM	-40 to 85	5638I
TLV5638IDG4	Active	Production	SOIC (D) | 8	75 | TUBE	Yes	NIPDAU	Level-1-260C-UNLIM	-40 to 85	5638I
TLV5638IDR	Active	Production	SOIC (D) | 8	2500 | LARGE T&R	Yes	NIPDAU	Level-1-260C-UNLIM	-40 to 85	5638I
TLV5638IDR.A	Active	Production	SOIC (D) | 8	2500 | LARGE T&R	Yes	NIPDAU	Level-1-260C-UNLIM	-40 to 85	5638I
TLV5638MFKB	Active	Production	LCCC (FK) | 20	55 | TUBE	ROHS Exempt	SNPB	N/A for Pkg Type	-55 to 125	5962-9957601Q2A TLV5638 MFKB
TLV5638MFKB.A	Active	Production	LCCC (FK) | 20	55 | TUBE	ROHS Exempt	SNPB	N/A for Pkg Type	-55 to 125	5962-9957601Q2A TLV5638 MFKB
TLV5638MJGB	Active	Production	CDIP (JG) | 8	50 | TUBE	No	SNPB	N/A for Pkg Type	-55 to 125	9957601QPA TLV5638M
TLV5638MJGB.A	Active	Production	CDIP (JG) | 8	50 | TUBE	No	SNPB	N/A for Pkg Type	-55 to 125	9957601QPA TLV5638M
TLV5638QD	Active	Production	SOIC (D) | 8	75 | TUBE	Yes	NIPDAU	Level-1-260C-UNLIM	-40 to 125	V5638
TLV5638QD.A	Active	Production	SOIC (D) | 8	75 | TUBE	Yes	NIPDAU	Level-1-260C-UNLIM	-40 to 125	V5638
TLV5638QDG4	Active	Production	SOIC (D) | 8	75 | TUBE	Yes	NIPDAU	Level-1-260C-UNLIM	-	V5638

Orderable part number	Status (1)	Material type (2)	Package | Pins	Package qty | Carrier	RoHS (3)	Lead finish/ Ball material (4)	MSL rating/ Peak reflow (5)	Op temp (°C)	Part marking (6)
TLV5638QDG4.A	Active	Production	SOIC (D) | 8	75 | TUBE	Yes	NIPDAU	Level-1-260C-UNLIM	-40 to 125	V5638
TLV5638QDR	Active	Production	SOIC (D) | 8	2500 | LARGE T&R	Yes	NIPDAU	Level-1-260C-UNLIM	-40 to 125	V5638
TLV5638QDR.A	Active	Production	SOIC (D) | 8	2500 | LARGE T&R	Yes	NIPDAU	Level-1-260C-UNLIM	-40 to 125	V5638
TLV5638QDRG4	Active	Production	SOIC (D) | 8	2500 | LARGE T&R	Yes	NIPDAU	Level-1-260C-UNLIM	-	V5638
TLV5638QDRG4.A	Active	Production	SOIC (D) | 8	2500 | LARGE T&R	Yes	NIPDAU	Level-1-260C-UNLIM	-40 to 125	V5638

(1) **Status:** For more details on status, see our product life cycle.

(2) **Material type:** When designated, preproduction parts are prototypes/experimental devices, and are not yet approved or released for full production. Testing and final process, including without limitation quality assurance, reliability performance testing, and/or process qualification, may not yet be complete, and this item is subject to further changes or possible discontinuation. If available for ordering, purchases will be subject to an additional waiver at checkout, and are intended for early internal evaluation purposes only. These items are sold without warranties of any kind.

(3) **RoHS values:** Yes, No, RoHS Exempt. See the TI RoHS Statement for additional information and value definition.

(4) **Lead finish/Ball material:** Parts may have multiple material finish options. Finish options are separated by a vertical ruled line. Lead finish/Ball material values may wrap to two lines if the finish value exceeds the maximum column width.

(5) **MSL rating/Peak reflow:** The moisture sensitivity level ratings and peak solder (reflow) temperatures. In the event that a part has multiple moisture sensitivity ratings, only the lowest level per JEDEC standards is shown. Refer to the shipping label for the actual reflow temperature that will be used to mount the part to the printed circuit board.

(6) **Part marking:** There may be an additional marking, which relates to the logo, the lot trace code information, or the environmental category of the part.

Multiple part markings will be inside parentheses. Only one part marking contained in parentheses and separated by a "~" will appear on a part. If a line is indented then it is a continuation of the previous line and the two combined represent the entire part marking for that device.

Important Information and Disclaimer: The information provided on this page represents TI's knowledge and belief as of the date that it is provided. TI bases its knowledge and belief on information provided by third parties, and makes no representation or warranty as to the accuracy of such information. Efforts are underway to better integrate information from third parties. TI has taken and continues to take reasonable steps to provide representative and accurate information but may not have conducted destructive testing or chemical analysis on incoming materials and chemicals. TI and TI suppliers consider certain information to be proprietary, and thus CAS numbers and other limited information may not be available for release.

In no event shall TI's liability arising out of such information exceed the total purchase price of the TI part(s) at issue in this document sold by TI to Customer on an annual basis.

OTHER QUALIFIED VERSIONS OF TLV5638, TLV5638M :

- Catalog : TLV5638
- Enhanced Product : TLV5638-EP, TLV5638-EP
- Military : TLV5638M

NOTE: Qualified Version Definitions:

- Catalog - TI's standard catalog product
- Enhanced Product - Supports Defense, Aerospace and Medical Applications
- Military - QML certified for Military and Defense Applications

TAPE AND REEL INFORMATION

REEL DIMENSIONS

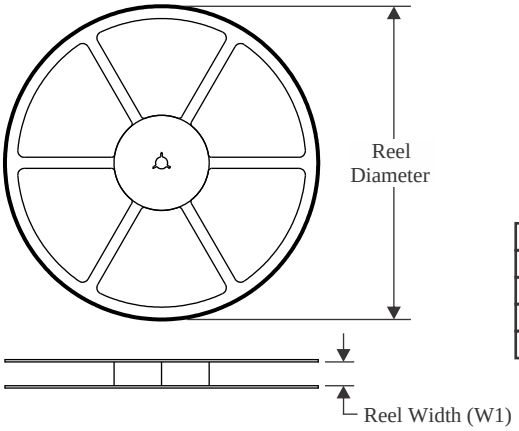

TAPE DIMENSIONS

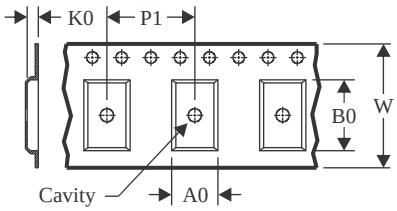

A0	Dimension designed to accommodate the component width
B0	Dimension designed to accommodate the component length
K0	Dimension designed to accommodate the component thickness
W	Overall width of the carrier tape
P1	Pitch between successive cavity centers

QUADRANT ASSIGNMENTS FOR PIN 1 ORIENTATION IN TAPE

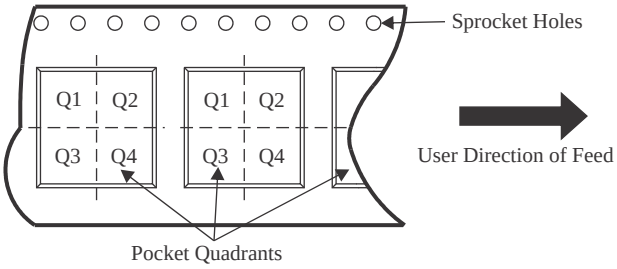

*All dimensions are nominal

Device	Package Type	Package Drawing	Pins	SPQ	Reel Diameter (mm)	Reel Width W1 (mm)	A0 (mm)	B0 (mm)	K0 (mm)	P1 (mm)	W (mm)	Pin1 Quadrant
TLV5638CDR	SOIC	D	8	2500	330.0	12.4	6.4	5.2	2.1	8.0	12.0	Q1
TLV5638IDR	SOIC	D	8	2500	330.0	12.4	6.4	5.2	2.1	8.0	12.0	Q1
TLV5638QDR	SOIC	D	8	2500	330.0	12.4	6.4	5.2	2.1	8.0	12.0	Q1

TAPE AND REEL BOX DIMENSIONS

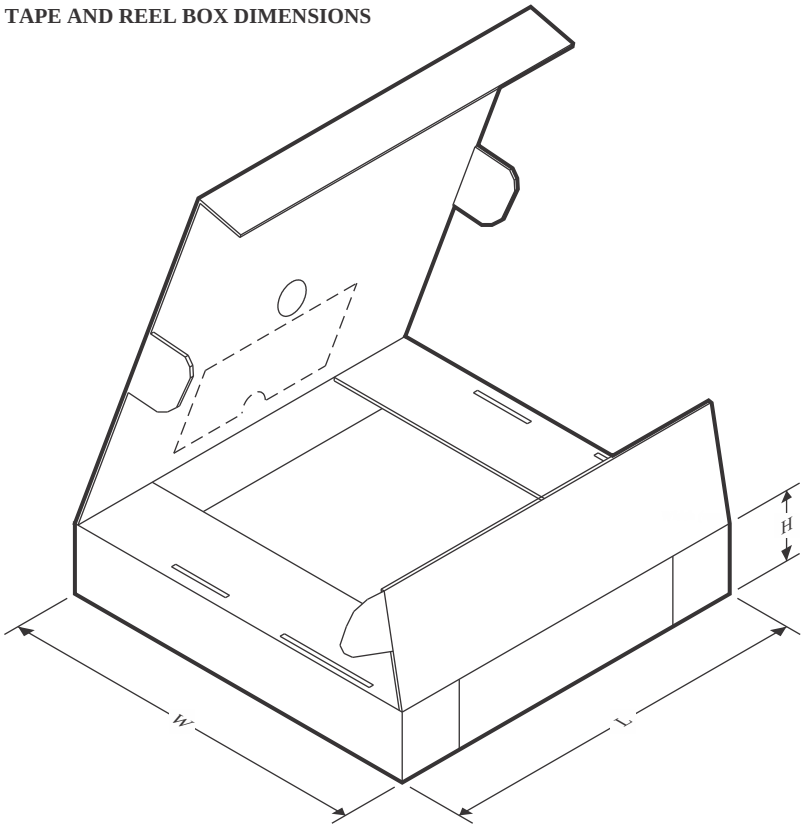

*All dimensions are nominal

Device	Package Type	Package Drawing	Pins	SPQ	Length (mm)	Width (mm)	Height (mm)
TLV5638CDR	SOIC	D	8	2500	350.0	350.0	43.0
TLV5638IDR	SOIC	D	8	2500	356.0	356.0	35.0
TLV5638QDR	SOIC	D	8	2500	350.0	350.0	43.0

TUBE

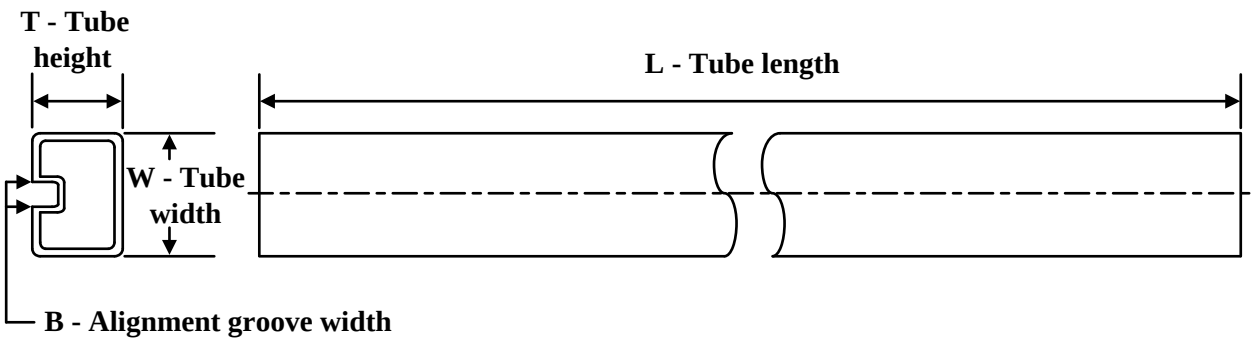

*All dimensions are nominal

Device	Package Name	Package Type	Pins	SPQ	L (mm)	W (mm)	T (µm)	B (mm)
5962-9957601Q2A	FK	LCCC	20	55	506.98	12.06	2030	NA
TLV5638CD	D	SOIC	8	75	505.46	6.76	3810	4
TLV5638CD.A	D	SOIC	8	75	505.46	6.76	3810	4
TLV5638CDG4	D	SOIC	8	75	505.46	6.76	3810	4
TLV5638ID	D	SOIC	8	75	506.6	8	3940	4.32
TLV5638ID.A	D	SOIC	8	75	506.6	8	3940	4.32
TLV5638IDG4	D	SOIC	8	75	506.6	8	3940	4.32
TLV5638MFKB	FK	LCCC	20	55	506.98	12.06	2030	NA
TLV5638MFKB.A	FK	LCCC	20	55	506.98	12.06	2030	NA
TLV5638QD	D	SOIC	8	75	505.46	6.76	3810	4
TLV5638QD.A	D	SOIC	8	75	505.46	6.76	3810	4
TLV5638QDG4	D	SOIC	8	75	505.46	6.76	3810	4
TLV5638QDG4.A	D	SOIC	8	75	505.46	6.76	3810	4

JG0008A

CDIP - 5.08 mm max height

CERAMIC DUAL IN-LINE PACKAGE

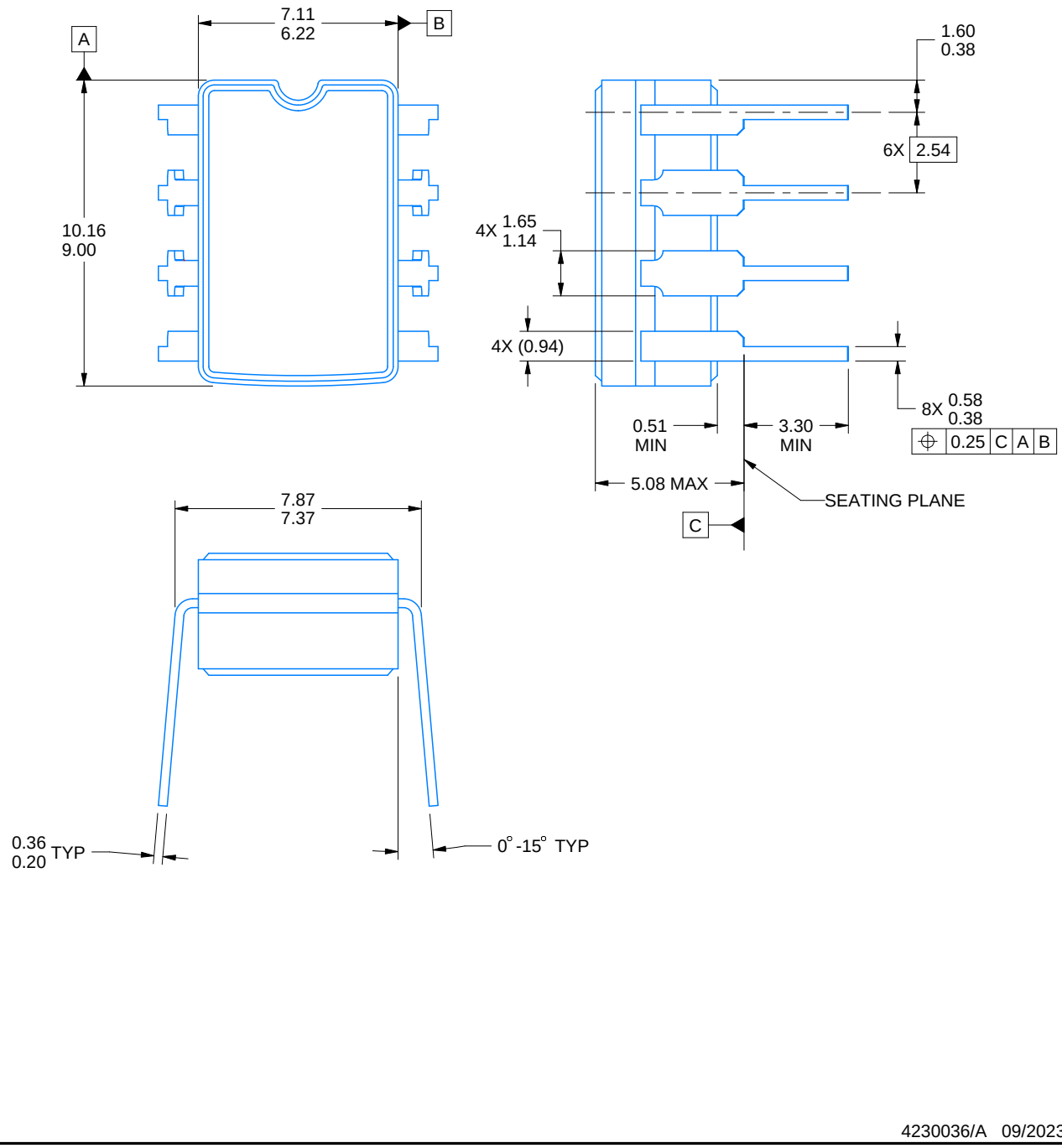

4230036/A 09/2023

NOTES:

1. All linear dimensions are in millimeters. Any dimensions in parenthesis are for reference only. Dimensioning and tolerancing per ASME Y14.5M.
2. This drawing is subject to change without notice.
3. This package can be hermetically sealed with a ceramic lid using glass frit.
4. Index point is provided on cap for terminal identification.
5. Falls within MIL STD 1835 GDIP1-T8

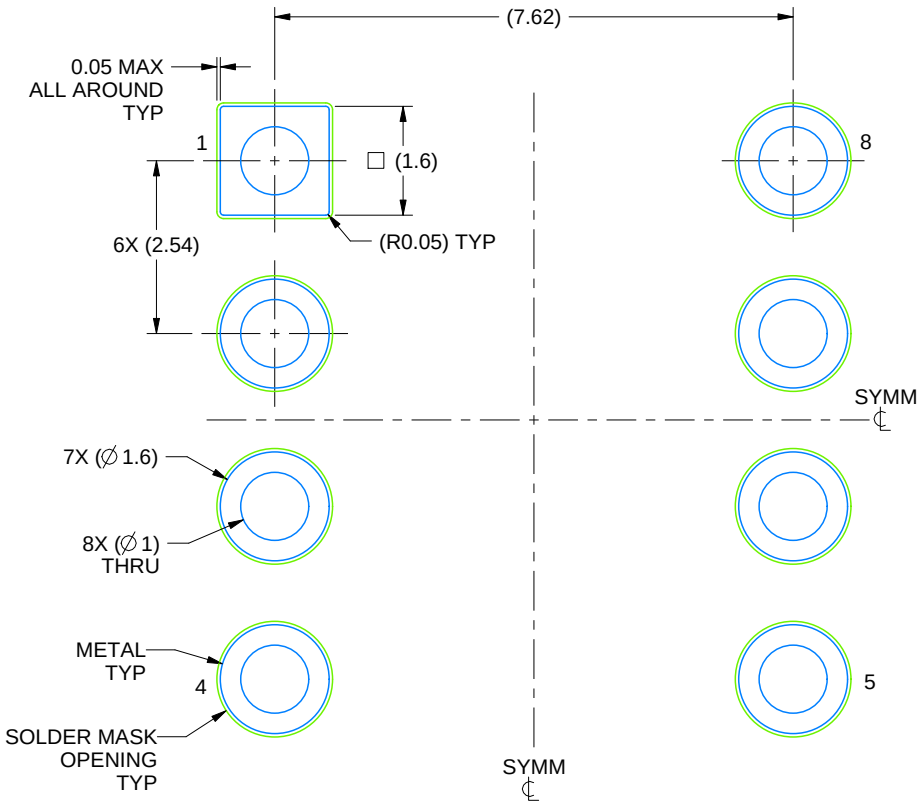

LAND PATTERN EXAMPLE
NON SOLDER MASK DEFINED
SCALE: 9X

4230036/A 09/2023

GENERIC PACKAGE VIEW

FK 20

LCCC - 2.03 mm max height

8.89 x 8.89, 1.27 mm pitch

LEADLESS CERAMIC CHIP CARRIER

This image is a representation of the package family, actual package may vary.
Refer to the product data sheet for package details.

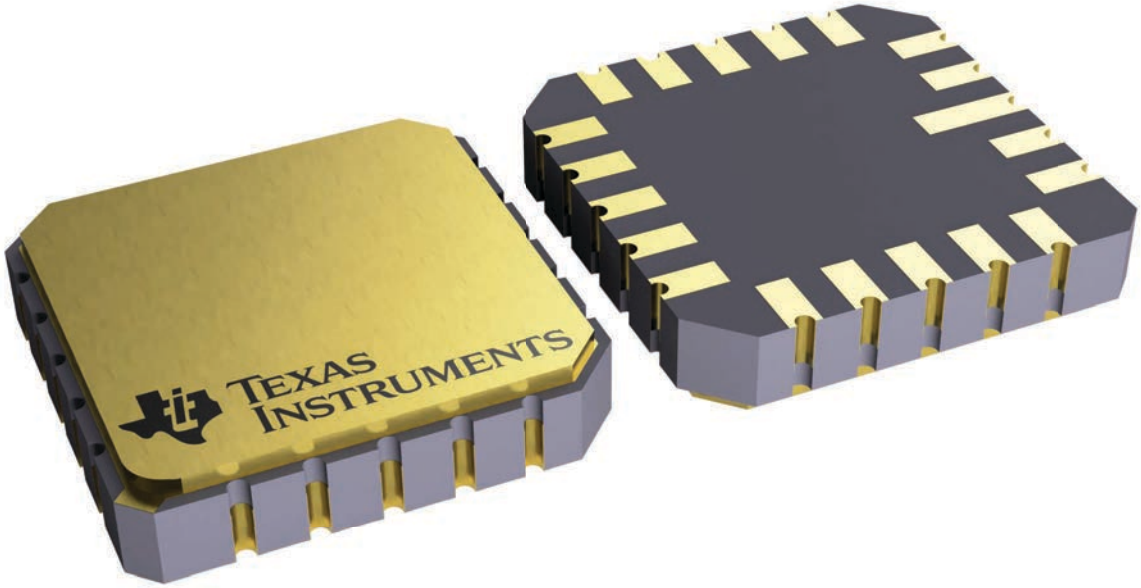

4229370VA\

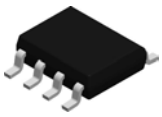

PACKAGE OUTLINE

D0008A

SOIC - 1.75 mm max height

SMALL OUTLINE INTEGRATED CIRCUIT

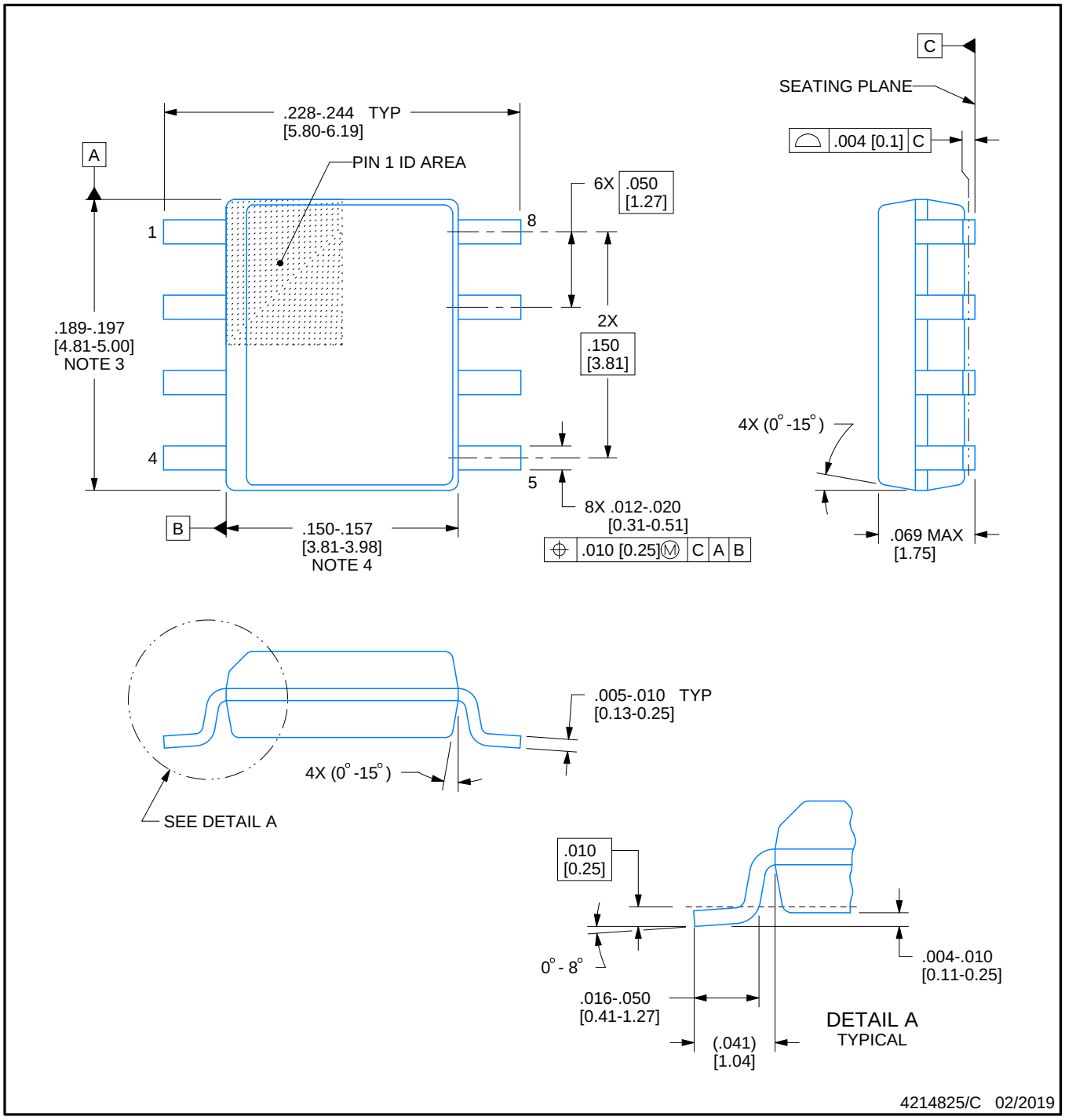

NOTES:

1. Linear dimensions are in inches [millimeters]. Dimensions in parenthesis are for reference only. Controlling dimensions are in inches. Dimensioning and tolerancing per ASME Y14.5M.
2. This drawing is subject to change without notice.
3. This dimension does not include mold flash, protrusions, or gate burrs. Mold flash, protrusions, or gate burrs shall not exceed .006 [0.15] per side.
4. This dimension does not include interlead flash.
5. Reference JEDEC registration MS-012, variation AA.

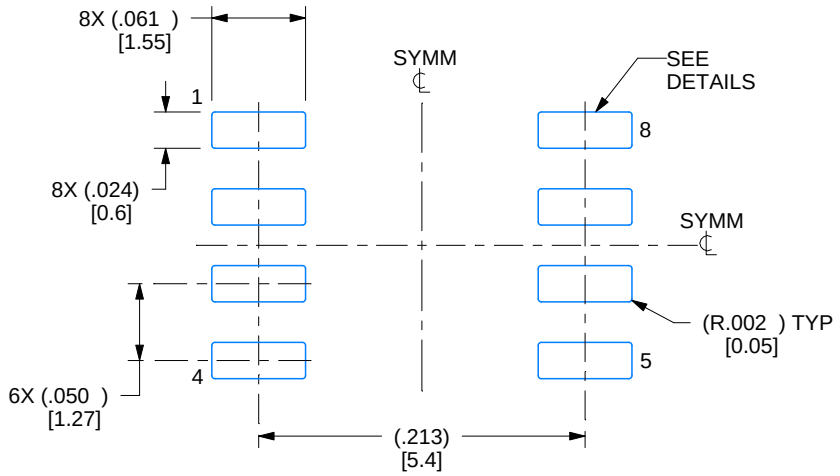

LAND PATTERN EXAMPLE
EXPOSED METAL SHOWN
SCALE:8X

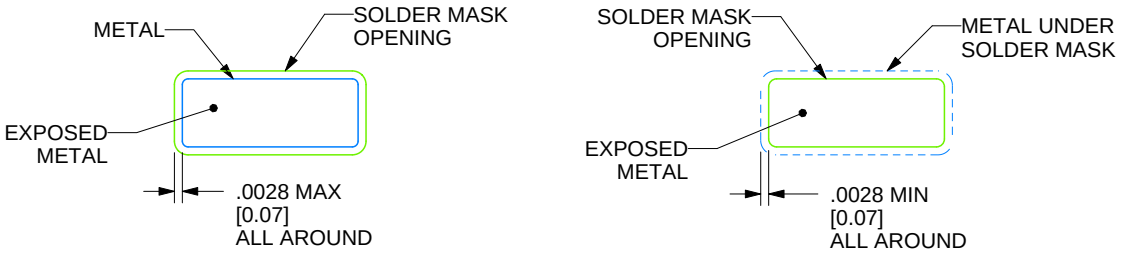

SOLDER MASK DETAILS

4214825/C 02/2019

NOTES: (continued)

6. Publication IPC-7351 may have alternate designs.
7. Solder mask tolerances between and around signal pads can vary based on board fabrication site.

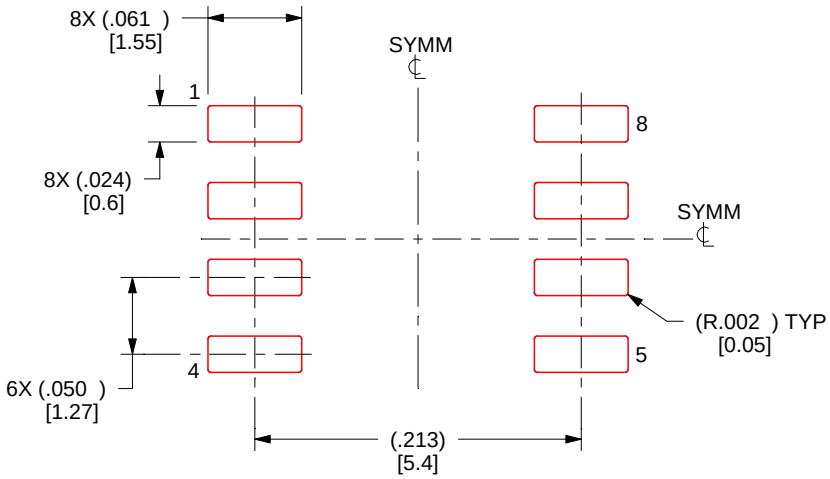

SOLDER PASTE EXAMPLE
BASED ON .005 INCH [0.125 MM] THICK STENCIL
SCALE:8X

4214825/C 02/2019

NOTES: (continued)

8. Laser cutting apertures with trapezoidal walls and rounded corners may offer better paste release. IPC-7525 may have alternate design recommendations.
9. Board assembly site may have different recommendations for stencil design.

IMPORTANT NOTICE AND DISCLAIMER

TI PROVIDES TECHNICAL AND RELIABILITY DATA (INCLUDING DATA SHEETS), DESIGN RESOURCES (INCLUDING REFERENCE DESIGNS), APPLICATION OR OTHER DESIGN ADVICE, WEB TOOLS, SAFETY INFORMATION, AND OTHER RESOURCES “AS IS” AND WITH ALL FAULTS, AND DISCLAIMS ALL WARRANTIES, EXPRESS AND IMPLIED, INCLUDING WITHOUT LIMITATION ANY IMPLIED WARRANTIES OF MERCHANTABILITY, FITNESS FOR A PARTICULAR PURPOSE OR NON-INFRINGEMENT OF THIRD PARTY INTELLECTUAL PROPERTY RIGHTS.

These resources are intended for skilled developers designing with TI products. You are solely responsible for (1) selecting the appropriate TI products for your application, (2) designing, validating and testing your application, and (3) ensuring your application meets applicable standards, and any other safety, security, regulatory or other requirements.

These resources are subject to change without notice. TI grants you permission to use these resources only for development of an application that uses the TI products described in the resource. Other reproduction and display of these resources is prohibited. No license is granted to any other TI intellectual property right or to any third party intellectual property right. TI disclaims responsibility for, and you will fully indemnify TI and its representatives against, any claims, damages, costs, losses, and liabilities arising out of your use of these resources.

TI’s products are provided subject to TI’s Terms of Sale or other applicable terms available either on ti.com or provided in conjunction with such TI products. TI’s provision of these resources does not expand or otherwise alter TI’s applicable warranties or warranty disclaimers for TI products.

TI objects to and rejects any additional or different terms you may have proposed.

Mailing Address: Texas Instruments, Post Office Box 655303, Dallas, Texas 75265
Copyright © 2025, Texas Instruments Incorporated