TPS251xx USB Dedicated Charging Port Controller

1 Features

- Supports USB DCP shorting D+ line to D– line per USB battery charging specification, revision 1.2 (BC1.2)
- Supports shorted mode (shorting D+ line to D– line) per Chinese Telecommunication Industry Standard YD/T 1591-2009
- Supports USB DCP applying 2.7 V on D+ Line and 2 V on D- line (or USB DCP applying 2 V on D+ line and 2.7 V on D– line) (TPS2513, TPS2514)
- Supports USB DCP applying 2.7 V on D+ line and 2.7 V on D- line (TPS2513A, TPS2514A)
- Supports USB DCP applying 1.2 V on D+ and D– Lines
- Automatically Switch D+ and D– Lines Connections for an Attached Device
- Dual USB Port Controller (TPS2513, TPS2513A)
- Single USB port controller (TPS2514, TPS2514A)
- Operating range: 4.5 V to 5.5 V
- Available in SOT23-6 package

2 Applications

- Vehicle USB power chargers
- AC-DC adapters with USB ports
- Other USB chargers

3 Description

The TPS251xx devices are USB dedicated charging port (DCP) controllers. An auto-detect feature monitors USB data line voltage, and automatically provides the correct electrical signatures on the data lines to charge compliant devices among the following dedicated charging schemes:

1. Divider 1 DCP, required to apply 2 V and 2.7 V on the D+ and D– Lines respectively (TPS2513, TPS2514)
2. Divider 2 DCP, required to apply 2.7 V and 2 V on the D+ and D– Lines respectively (TPS2513, TPS2514)
3. Divider 3 DCP, required to apply 2.7 V and 2.7 V on the D+ and D– Lines respectively (TPS2513A, TPS2514A)
4. BC1.2 DCP, required to short the D+ Line to the D– Line
5. Chinese Telecom Standard YD/T 1591-2009 Shorted Mode, required to short the D+ Line to the D– Line
6. 1.2 V on both D+ and D– Lines

Device Information(1)

PART NUMBER	PACKAGE	BODY SIZE (NOM)
TPS2513, TPS2514	SOT-23 (6)	2.90 mm x 1.60 mm

(1) For all available packages, see the orderable addendum at the end of the datasheet.

Simplified Schematic

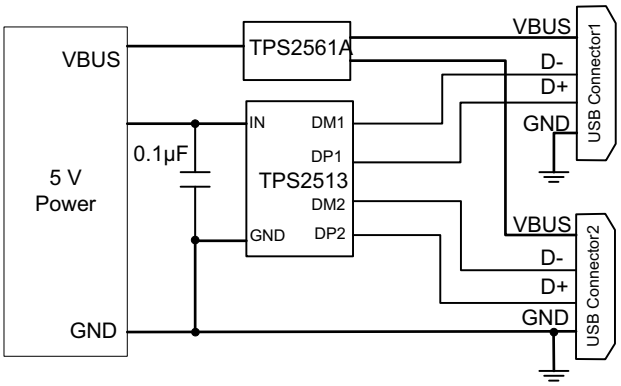

An IMPORTANT NOTICE at the end of this data sheet addresses availability, warranty, changes, use in safety-critical applications, intellectual property matters and other important disclaimers. PRODUCTION DATA.

Table of Contents

1 Features ... 1
2 Applications ... 1
3 Description ... 1
4 Revision History ... 2
5 Device Options ... 3
6 Pin Configuration and Functions ... 4
7 Specifications ... 5
7.1 Absolute Maximum Ratings ... 5
7.2 ESD Ratings ... 5
7.3 Recommended Operating Conditions ... 5
7.4 Thermal Information ... 5
7.5 Electrical Characteristics ... 6
7.6 Typical Characteristics ... 7
8 Detailed Description ... 9
8.1 Overview ... 9
8.2 Functional Block Diagrams ... 10
8.3 Feature Description ... 11
8.4 Device Functional Modes ... 12
9 Applications and Implementation ... 13
9.1 Application Information ... 13
9.2 Typical Applications ... 13
10 Power Supply Recommendations ... 15
11 Layout ... 15
11.1 Layout Guidelines ... 15
11.2 Layout Example ... 15
12 Device and Documentation Support ... 16
12.1 Related Links ... 16
12.2 Receiving Notification of Documentation Updates 16
12.3 Support Resources ... 16
12.4 Trademarks ... 16
12.5 Electrostatic Discharge Caution ... 16
12.6 Glossary ... 16
13 Mechanical, Packaging, and Orderable Information ... 16

4 Revision History

NOTE: Page numbers for previous revisions may differ from page numbers in the current version.

Changes from Revision C (December 2016) to Revision D	Page
• Changed DIVIDER 2 From: (D+/D– = 2 V/2.7 V) To: (D+/D– = 2.7V / 2V) in the *Device Options* table	3
• Changed DIVIDER 3 From: (D+/D– = 2 V/2.7 V) To: (D+/D– = 2.7 V/2.7 V) in the *Device Options* table	3
• Added title to Device Options table	3

Changes from Revision B (September 2013) to Revision C	Page
• Added *ESD Rating* table, *Feature Description* section, *Device Functional Modes*, *Application and Implementation* section, *Power Supply Recommendations* section, *Layout* section, *Device and Documentation Support* section, and *Mechanical, Packaging, and Orderable Information* section	1
• Changed DM1 output voltage parameter symbol in *Electrical Characteristics* From: V_{DM1_2V} To: $V_{DM1_2.7V}$	6
• Changed DM2 output voltage parameter symbol in *Electrical Characteristics* From: V_{DM2_2V} To: $V_{DM2_2.7V}$	6

Changes from Revision A (May 2013) to Revision B	Page
• Added TPS2513A and TPS2514A devices throughout data sheet	1
• Changed *Feature* list to specify TPS251, TPS2513A, TPS2514, and TPS2514A devices	1
• Changed list of charging scheme items in *Description*	1
• Changed Divider Mode section of the ELECTRICAL CHARACTERISTICS table to show values for the different devices	6
• Changed Functional Block Diagram for TPS2513, TPS2513A	10
• Changed Functional Block Diagram for TPS2514, TPS2514A	10
• Changed section title From: Divider 1 (DCP Applying 2 V on D+ Line and 2.7 V on D– Line) or Divider 2 (DCP Applying 2.7 V on D+ Line and 2 V on D– Line) To: Divider DCP	11
• Changed text in the Divider DCP paragraph	11
• Added Divider 3 DCP image	11
• Changed the DCP Auto-Detect section	12

Copyright © 2013–2020, Texas Instruments Incorporated

5 Device Options

Table 1. Device Options

DEVICE	NUMBER OF CONTROLLER	CHARGING SCHEMES (DCP_AUTO)			1.2-V MODE (D+/D– SHORTED AND BIAS TO 1.2 V)	BC1.2 AND YD/T 1591-2009 MODE (D+/D– SHORTED)
		DIVIDER 1 (D+/D– = 2 V/2.7 V)	DIVIDER 2 (D+/D– = 2.7V / 2V)	DIVIDER 3 (D+/D– = 2.7 V/2.7 V)		
TPS2513	Dual	Yes(1)	Yes	No	Yes	Yes
TPS2514	Single	Yes(1)	Yes	No		
TPS2513A	Dual	No	No	Yes		
TPS2514A	Single	No	No	Yes		

(1) See Figure 16

6 Pin Configuration and Functions

TPS2513x DBV Package
6-Pin SOT-23
Top View

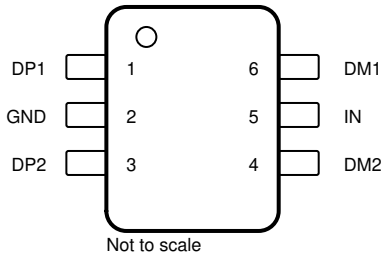

Pin Functions: TPS2513x

PIN		TYPE(1)	DESCRIPTION
NO.	NAME		
1	DP1	I/O	Connected to the D+ or D– line of USB connector, provide the correct voltage with attached portable equipment for DCP detection.
2	GND	G	Ground connection
3	DP2	I/O	Connected to the D+ or D– line of USB connector, provide the correct voltage with attached portable equipment for DCP detection.
4	DM2	I/O	Connected to the D+ or D– line of USB connector, provide the correct voltage with attached portable equipment for DCP detection.
5	IN	P	Power supply. Connect a ceramic capacitor with a value of 0.1-µF or greater from the IN pin to GND as close to the device as possible.
6	DM1	I/O	Connected to the D+ or D– line of USB connector, provide the correct voltage with attached portable equipment for DCP detection.

(1) G = Ground, I = Input, O = Output, P = Power

TPS2514x DBV Package
6-Pin SOT-23
Top View

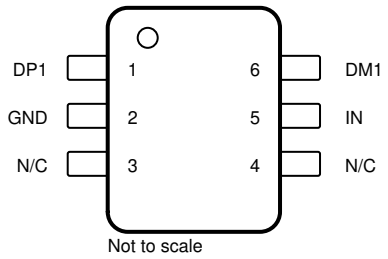

Pin Functions: TPS2514x

PIN		TYPE(1)	DESCRIPTION
NO.	NAME		
1	DP1	I/O	Connected to the D+ or D– line of USB connector, provide the correct voltage with attached portable equipment for DCP detection.
2	GND	G	Ground connection
3	N/C	—	No connect pin. Can be grounded or left floating.
4	N/C	—	No connect pin. Can be grounded or left floating.
5	IN	P	Power supply. Connect a ceramic capacitor with a value of 0.1-µF or greater from the IN pin to GND as close to the device as possible.
6	DM1	I/O	Connected to the D+ or D– line of USB connector, provide the correct voltage with attached portable equipment for DCP detection.

(1) G = Ground, I = Input, O = Output, P = Power

Copyright © 2013–2020, Texas Instruments Incorporated

7 Specifications

7.1 Absolute Maximum Ratings

over operating free-air temperature range (unless otherwise noted)[1]

		MIN	MAX	UNIT
Voltage	IN	–0.3	7	V
	DP1, DP2 output voltage, DM1, DM2 output voltage	–0.3	5.8	
	DP1, DP2 input voltage, DM1, DM2 input voltage	–0.3	5.8	
Continuous output sink current (DP1, DP2 input current, DM1, DM2 input current)			35	mA
Continuous output source current (DP1, DP2 output current, DM1, DM2 output current)			35	mA
Operating junction temperature, T_J		–40	125	°C
Storage temperature, T_{stg}		–65	150	°C

(1) Stresses beyond those listed under *Absolute Maximum Ratings* may cause permanent damage to the device. These are stress ratings only, which do not imply functional operation of the device at these or any other conditions beyond those indicated under *Recommended Operating Conditions*. Exposure to absolute-maximum-rated conditions for extended periods may affect device reliability.

7.2 ESD Ratings

			VALUE	UNIT
$V_{(ESD)}$ Electrostatic discharge	Human-body model (HBM), per ANSI/ESDA/JEDEC JS-001[1]	Pin 5	±2000	V
		Pins 1, 3, 4, 6	±6000	
	Charged-device model (CDM), per JEDEC specification JESD22-C101[2]		±500	

(1) JEDEC document JEP155 states that 500-V HBM allows safe manufacturing with a standard ESD control process.
(2) JEDEC document JEP157 states that 250-V CDM allows safe manufacturing with a standard ESD control process.

7.3 Recommended Operating Conditions

Voltages are referenced to GND (unless otherwise noted), positive current are into pins.

		MIN	MAX	UNIT
V_{IN}	Input voltage of IN	4.5	5.5	V
V_{DP1}	DP1 data line input voltage	0	5.5	V
V_{DM1}	DM1 data line input voltage	0	5.5	V
I_{DP1}	Continuous sink or source current		±10	mA
I_{DM1}	Continuous sink or source current		±10	mA
V_{DP2}	DP2 data line input voltage	0	5.5	V
V_{DM2}	DM2 data line input voltage	0	5.5	V
I_{DP2}	Continuous sink or source current		±10	mA
I_{DM2}	Continuous sink or source current		±10	mA
T_J	Operating junction temperature	–40	125	°C

7.4 Thermal Information

THERMAL METRIC[1]		TPS2513x, TPS2514x DBV (SOT-23) 6 PINS	UNIT
$R_{\theta JA}$	Junction-to-ambient thermal resistance	179.9	°C/W
$R_{\theta JC(top)}$	Junction-to-case (top) thermal resistance	117.5	°C/W
$R_{\theta JB}$	Junction-to-board thermal resistance	41.9	°C/W
ψ_{JT}	Junction-to-top characterization parameter	17.2	°C/W
ψ_{JB}	Junction-to-board characterization parameter	41.5	°C/W
$R_{\theta JC(bot)}$	Junction-to-case (bottom) thermal resistance	—	°C/W

(1) For more information about traditional and new thermal metrics, see the *IC Package Thermal Metrics* application report.

7.5 Electrical Characteristics

Conditions are –40°C ≤ (T_J = T_A) ≤ 125°C and 4.5 V ≤ V_{IN} ≤ 5.5 V. Positive current are into pins. Typical values are at 25°C. All voltages are with respect to GND (unless otherwise noted).

PARAMETER		TEST CONDITIONS	MIN	TYP	MAX	UNIT
UNDERVOLTAGE LOCKOUT						
V_{UVLO}	IN rising UVLO threshold voltage		3.9	4.1	4.3	V
	Hysteresis(1)			100		mV
SUPPLY CURRENT						
I_{IN}	IN supply current	4.5 V ≤ V_{IN} ≤ 5.5 V		155	200	µA
BC 1.2 DCP MODE (SHORT MODE)						
R_{DPM_SHORT1}	DP1 and DM1 shorting resistance	V_{DP1} = 0.8 V, I_{DM1} = 1 mA		157	200	Ω
R_{DCHG_SHORT1}	Resistance between DP1/DM1 and GND	V_{DP1} = 0.8 V	350	656	1150	kΩ
$V_{DPL_TH_DETACH1}$	Voltage threshold on DP1 (under which the device goes back to divider mode)		310	330	350	mV
$V_{DPL_TH_DETACH_HYS1}$	Hysteresis(1)			50		mV
R_{DPM_SHORT2}	DP2 and DM2 shorting resistance	V_{DP2} = 0.8V, I_{DM2} = 1 mA		157	200	Ω
R_{DCHG_SHORT2}	Resistance between DP2/DM2 and GND	V_{DP2} = 0.8 V	350	656	1150	kΩ
$V_{DPL_TH_DETACH2}$	Voltage threshold on DP2 (under which the device goes back to divider mode)		310	330	350	mV
$V_{DPL_TH_DETACH_HYS2}$	Hysteresis(1)			50		mV
DIVIDER MODE (TPS2513, TPS2514)						
$V_{DP1_2.7V}$	DP1 output voltage	V_{IN} = 5 V	2.57	2.7	2.84	V
V_{DM1_2V}	DM1 output voltage	V_{IN} = 5 V	1.9	2	2.1	V
R_{DP1_PAD1}	DP1 output impedance	I_{DP1} = –5 µA	24	30	36	kΩ
R_{DM1_PAD1}	DM1 output impedance	I_{DM1} = –5 µA	24	30	36	kΩ
$V_{DP2_2.7V}$	DP2 output voltage	V_{IN} = 5 V	2.57	2.7	2.84	V
V_{DM2_2V}	DM2 output voltage	V_{IN} = 5 V	1.9	2	2.1	V
R_{DP2_PAD1}	DP2 output impedance	I_{DP2} = –5 µA	24	30	36	kΩ
R_{DM2_PAD1}	DM2 output impedance	I_{DM2} = –5 µA	24	30	36	kΩ
DIVIDER MODE (TPS2513A, TPS2514A)						
$V_{DP1_2.7V}$	DP1 output voltage	V_{IN} = 5 V	2.57	2.7	2.84	V
$V_{DM1_2.7V}$	DM1 output voltage	V_{IN} = 5 V	2.57	2.7	2.84	V
R_{DP1_PAD1}	DP1 output impedance	I_{DP1} = –5 µA	24	30	36	kΩ
R_{DM1_PAD1}	DM1 output impedance	I_{DM1} = –5 µA	24	30	36	kΩ
$V_{DP2_2.7V}$	DP2 output voltage	V_{IN} = 5 V	2.57	2.7	2.84	V
$V_{DM2_2.7V}$	DM2 output voltage	V_{IN} = 5 V	2.57	2.7	2.84	V
R_{DP2_PAD1}	DP2 output impedance	I_{DP2} = –5 µA	24	30	36	kΩ
R_{DM2_PAD1}	DM2 output impedance	I_{DM2} = –5 µA	24	30	36	kΩ
1.2 V / 1.2 V MODE						
$V_{DP1_1.2V}$	DP1 output voltage	V_{IN} = 5 V	1.12	1.2	1.28	V
$V_{DM1_1.2V}$	DM1 output voltage	V_{IN} = 5 V	1.12	1.2	1.28	V
R_{DM1_PAD2}	DP1 output impedance	I_{DP1} = –5 µA	80	102	130	kΩ
R_{DP1_PAD2}	DM1 output impedance	I_{DM1} = –5 µA	80	102	130	kΩ
$V_{DP2_1.2V}$	DP2 output voltage	V_{IN} = 5 V	1.12	1.2	1.28	V
$V_{DM2_1.2V}$	DM2 output voltage	V_{IN} = 5 V	1.12	1.2	1.28	V
R_{DP2_PAD2}	DP2 output impedance	I_{DP2} = –5 µA	80	102	130	kΩ
R_{DM2_PAD2}	DM2 output impedance	I_{DM2} = –5 µA	80	102	130	kΩ

(1) Parameters provided for reference only, and do not constitute part of TI's published device specifications for purposes of TI's product warranty.

Copyright © 2013–2020, Texas Instruments Incorporated

7.6 Typical Characteristics

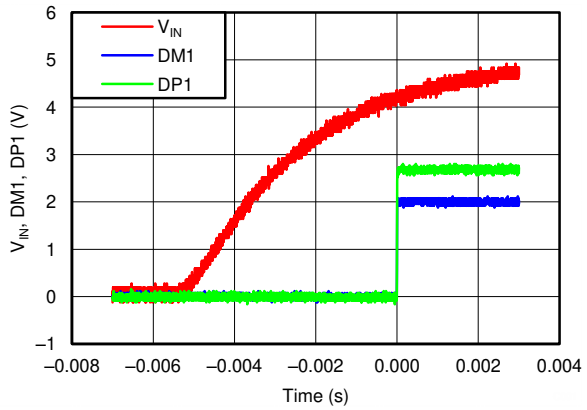

Figure 1. Power On (DM1 and DP1)

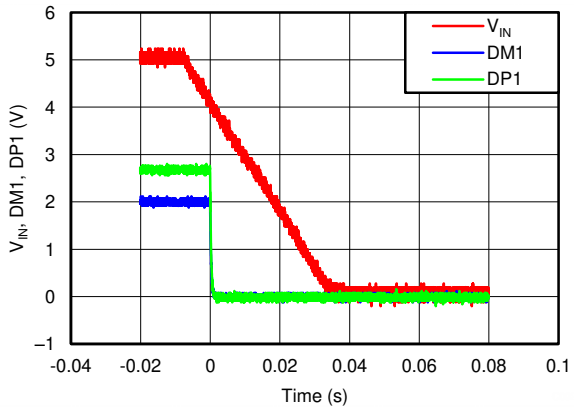

Figure 2. Power Off (DM1 and DP1)

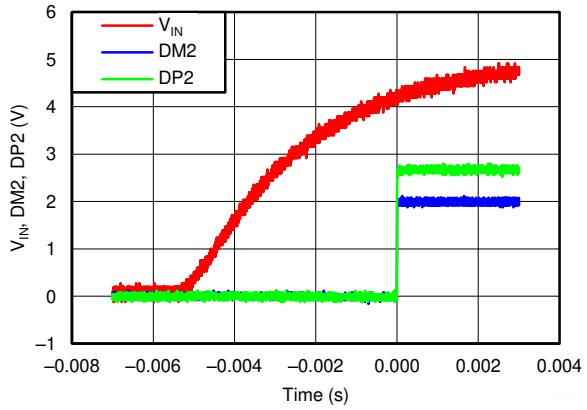

Figure 3. Power On (DM2 and DP2)

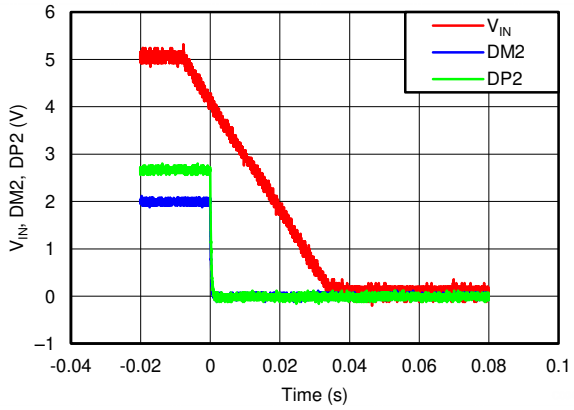

Figure 4. Power Off (DM2 and DP2)

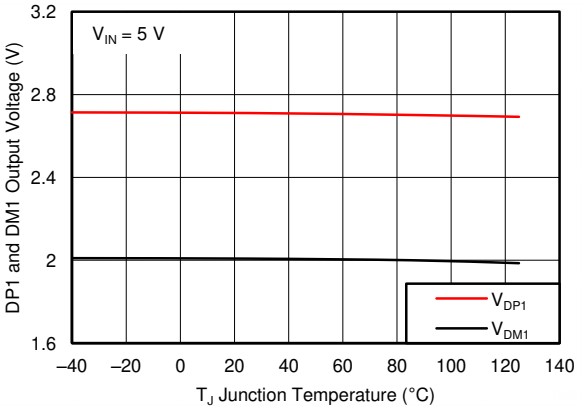

Figure 5. DP1 and DM1 Output Voltage vs Temperature

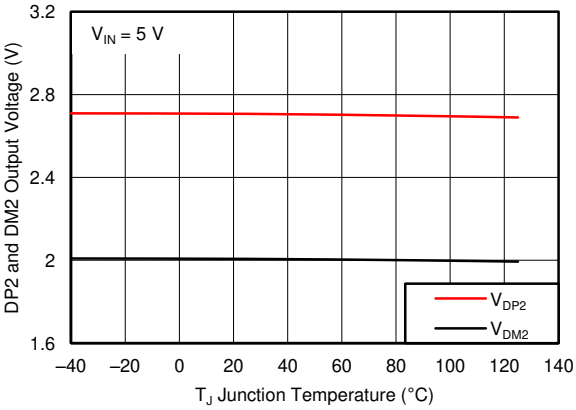

Figure 6. DP2 and DM2 Output Voltage vs Temperature

Typical Characteristics (continued)

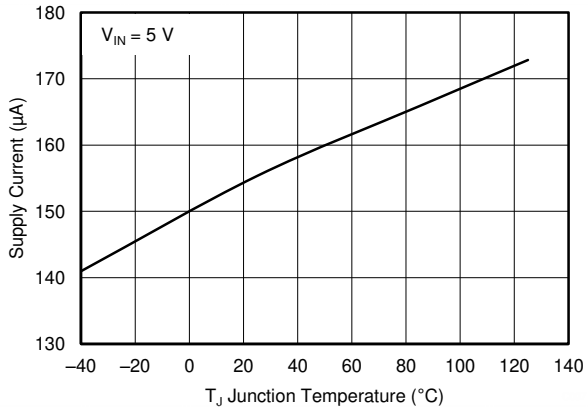

Figure 7. Supply Current vs Temperature

Copyright © 2013–2020, Texas Instruments Incorporated

8 Detailed Description

8.1 Overview

The following overview references various industry standards. TI always recommends consulting the latest standard to ensure the most recent and accurate information.

Rechargeable portable equipment requires an external power source to charge its batteries. USB ports are convenient locations for charging because of an available 5-V power source. Universally accepted standards are required to ensure host and client-side devices meet the power management requirements. Traditionally, USB host ports following the USB 2.0 Specification must provide at least 500 mA to downstream client-side devices. Because multiple USB devices can be attached to a single USB port through a bus-powered hub, it is the responsibility of the client-side device to negotiate the power allotment from the host to ensure the total current draw does not exceed 500 mA. In general, each USB device can subsequently request more current which is granted in steps of 100 mA, up 500 mA total. The host may grant or deny the request based on the available current.

Additionally, the success of the USB technology makes the micro-USB connector a popular choice for wall adapter cables. This allows a portable device to charge from both a wall adapter and USB port with only one connector.

One common difficulty has resulted from this. As USB charging has gained popularity, the 500-mA minimum defined by the USB 2.0 Specification or 900 mA defined in the USB 3.0 Specification, has become insufficient for many handsets, tablets and personal media players (PMP) which have a higher rated charging current. Wall adapters and car chargers can provide much more current than 500 mA or 900 mA to fast charge portable devices. Several new standards have been introduced defining protocol handshaking methods that allow host and client devices to acknowledge and draw additional current beyond the 500 mA (defined in the USB 2.0 Specification) or 900 mA (defined in the USB 3.0 Specification) minimum while using a single micro-USB input connector.

The devices support four of the most common protocols:

- USB Battery Charging Specification, Revision 1.2 (BC1.2)
- Chinese Telecommunications Industry Standard YD/T 1591-2009
- Divider mode
- 1.2 V on both D+ and D– lines

YD/T 1591-2009 is a subset of the BC1.2 specification supported by the vast majority of devices that implement USB charging. Divider and 1.2-V charging schemes are supported in devices from specific yet popular device makers. BC1.2 has three different port types, listed as follows.

- Standard downstream port (SDP)
- Charging downstream port (CDP)
- Dedicated charging port (DCP)

The BC1.2 Specification defines a charging port as a downstream facing USB port that provides power for charging portable equipment.

Table 2 shows different port operating modes according to the BC1.2 Specification.

Table 2. Operating Modes

PORT TYPE	SUPPORTS USB 2.0 COMMUNICATION	MAXIMUM ALLOWABLE CURRENT DRAWN BY PORTABLE EQUIPMENT (A)
SDP (USB 2.0)	Yes	0.5
SDP (USB 3.0)	Yes	0.9
CDP	Yes	1.5
DCP	No	1.5

The BC1.2 Specification defines the protocol necessary to allow portable equipment to determine what type of port it is connected to so that it can allot its maximum allowable current drawn. The hand-shaking process is two steps. During step one, the primary detection, the portable equipment outputs a nominal 0.6-V output on its D+ line and reads the voltage input on its D– line. The portable device concludes it is connected to a SDP if the voltage is less than the nominal data detect voltage of 0.3 V. The portable device concludes that it is connected to a Charging Port if the D– voltage is greater than the nominal data detect voltage of 0.3 V and less than 0.8 V. The second step, the secondary detection, is necessary for portable equipment to determine between a CDP and a DCP. The portable device outputs a nominal 0.6-V output on its D– line and reads the voltage input on its D+ line. The portable device concludes it is connected to a CDP if the data line being remains is less than the nominal data detect voltage of 0.3 V. The portable device concludes it is connected to a DCP if the data line being read is greater than the nominal data detect voltage of 0.3 V and less than 0.8 V.

8.2 Functional Block Diagrams

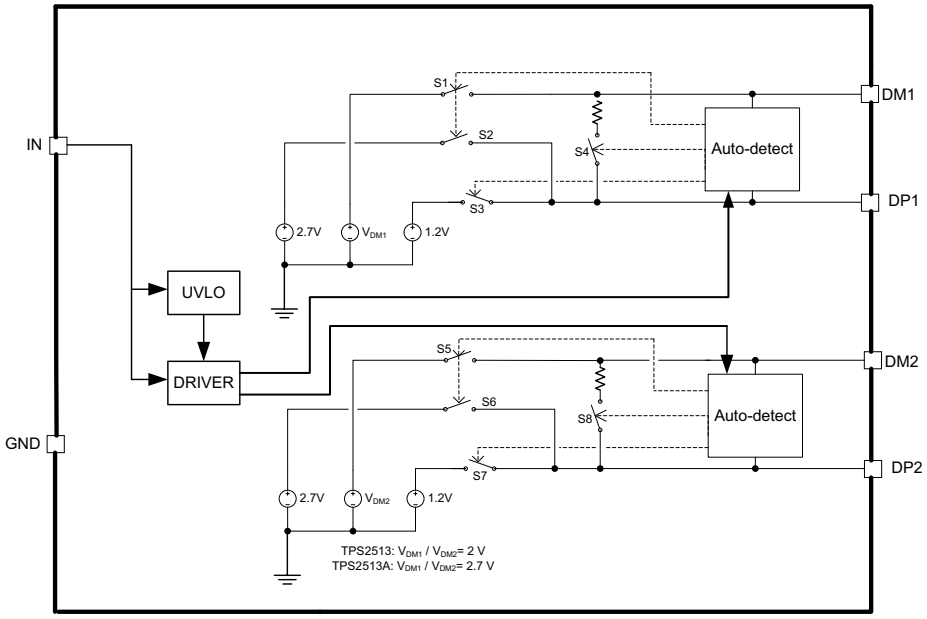

Figure 8. Functional Block Diagram, TPS2513, TPS2513A

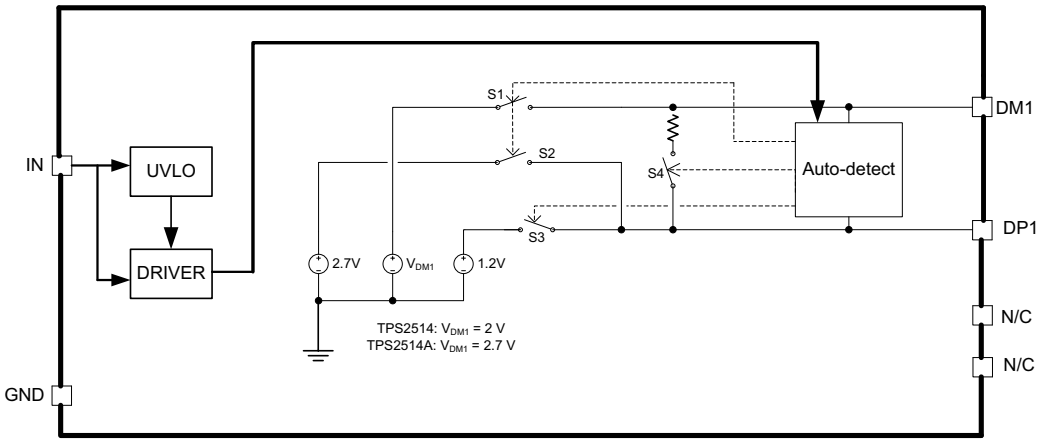

Figure 9. Functional Block Diagram, TPS2514, TPS2514A

Copyright © 2013–2020, Texas Instruments Incorporated

8.3 Feature Description

8.3.1 Dedicated Charging Port (DCP)

A dedicated charging port (DCP) is a downstream port on a device that outputs power through a USB connector but is not capable of enumerating a downstream device, which generally allows portable devices to fast charge at their maximum rated current. A USB charger is a device with a DCP, such as a wall adapter or car power adapter. A DCP is identified by the electrical characteristics of its data lines. The following DCP identification circuits are usually used to meet the handshaking detections of different portable devices.

8.3.2 Short the D+ Line to the D– Line

The USB BC1.2 Specification and the Chinese Telecommunications Industry Standard YD/T 1591-2009 define that the D+ and D– data lines must be shorted together with a maximum series impedance of 200 Ω. This is shown in Figure 10.

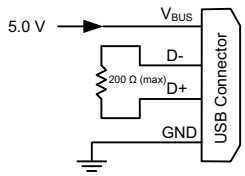

Figure 10. DCP Short Mode

8.3.3 Divider DCP

There are three charging schemes for divider DCP. They are named after Divider 1, Divider 2, and Divider 3 DCPs that are shown in Figure 11, Figure 12, and Figure 13. The Divider 1 charging scheme is used for 5-W adapters, and applies 2 V to the D+ line and 2.7 V to the D– data line. The Divider 2 charging scheme is used for 10-W adapters, and applies 2.7 V on the D+ line and 2 V is applied on the D– line. The Divider 3 charging scheme is used for 12-W adapters, and applies 2.7 V on D+ and D– lines.

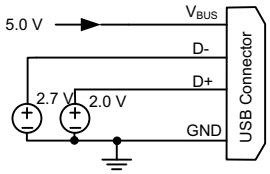

Figure 11. Divider 1 DCP

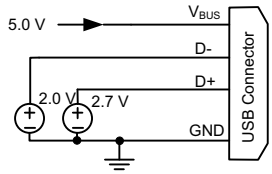

Figure 12. Divider 2 DCP

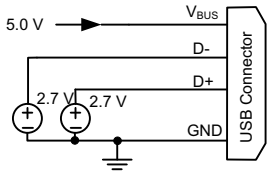

Figure 13. Divider 3 DCP

8.3.4 Applying 1.2 V to the D+ Line and 1.2 V to the D– Line

As shown in Figure 14, some tablet USB chargers require 1.2 V on the shorted data lines of the USB connector. The maximum resistance between the D+ line and the D– line is 200 Ω.

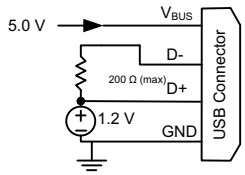

Figure 14. DCP Applying 1.2 V to the D+ Line and 1.2 V to the D– Line

The devices are USB dedicated charging port (DCP) controllers. Applications include vehicle power charger, wall adapters with USB DCP and other USB chargers. The device DCP controllers have the auto-detect feature that monitors the D+ and D– line voltages of the USB connector, providing the correct electrical signatures on the DP and DM pins for the correct detections of compliant portable devices to fast charge. These portable devices include smart phones, 5-V tablets and personal media players.

Feature Description (continued)

8.3.5 DCP Auto-Detect

The devices integrate an auto-detect feature to support divider mode, short mode and 1.2 V / 1.2 V modes. If a divider device is attached, 2.7 V is applied to the DP pin and 2 V is applied to the DM pin. If a BC1.2-compliant device is attached, the TPS2513 and TPS2514 automatically switches into short mode. If a device compliant with the 1.2 V / 1.2 V charging scheme is attached, 1.2 V is applied on both the DP pin and the DM pin. The functional diagram of DCP auto-detect feature (DM1 and DP1) is shown in Figure 15. DCP auto-detect feature (DM2 and DP2 of TPS2513) has the same functional configuration. For TPS2513A and TPS2514A, the devices also have DCP auto-detect feature and the auto-detect have the same functional configuration expect for the default mode is Divider 3 (D+/D– = 2.7 V / 2.7 V).

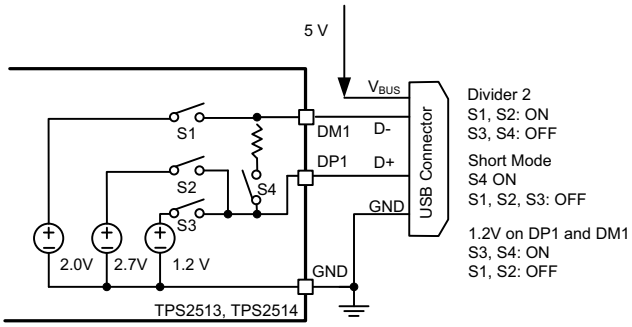

Figure 15. TPS2513 and TPS2514 DCP Auto-Detect Functional Diagram

8.3.6 Undervoltage Lockout (UVLO)

The undervoltage lockout (UVLO) circuit disables DP1, DM1, DP2 and DM2 output voltage until the input voltage reaches the UVLO turnon threshold. Built-in hysteresis prevents unwanted oscillations due to input voltage drop from large current surges.

8.4 Device Functional Modes

The devices operate in DCP mode and automatically monitor the voltage of the USB data lines, and provide the correct electronic signatures on the data lines to charge compliant devices.

Copyright © 2013–2020, Texas Instruments Incorporated

9 Applications and Implementation

NOTE

Information in the following applications sections is not part of the TI component specification, and TI does not warrant its accuracy or completeness. TI's customers are responsible for determining suitability of components for their purposes. Customers should validate and test their design implementation to confirm system functionality.

9.1 Application Information

The TPS251xx devices are USB dedicated charging port. The devices only provide the correct electrical signatures on the data lines of USB charger port and do not provide any power for the VBUS. Below is typical applications for USB charging ports.

9.2 Typical Applications

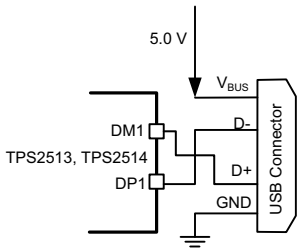

Figure 16. 5-W USB Charger Application

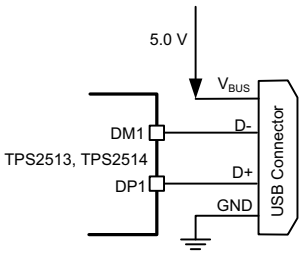

Figure 17. 10-W USB Charger Application

9.2.1 Design Requirements

Table 3 lists the design parameters for this example.

Table 3. Design Parameters

PARAMETER	VALUE
Input voltage, $V_{(IN)}$	5 V
Output voltage, $V_{(DC)}$	5 V
Maximum continuous output current, $I_{(OUT)}$	2.5 A

9.2.2 Detailed Design Procedure

9.2.2.1 Divide Mode Selection of 5-W and 10-W USB Chargers

The TPS2513 and TPS2514 provide two types of connections between the DP pin and the DM pin and between the D+ data line and the D– data line of the USB connector for a 5-W USB charger and a 10-W USB charger with a single USB port. For 5-W USB charger, the DP1 pin is connected to the D– line and the DM1 pin is connected to the D+ line. This is shown in Figure 16. For 10-W USB charger, the DP1 pin is connected to the D+ line and the DM1 pin is connected to the D– line. This is shown in Figure 17. Table 4 shows different charging schemes for both 5-W and 10-W USB charger solutions. DP2 and DM2 of TPS2513 also provides this two types of connections.

Table 4. Charging Schemes for 5-W And 10-W USB Chargers

USB CHARGER TYPE	CONTAINING CHARGING SCHEMES		
5-W	Divider 1	1.2 V on both D+ and D– Lines	BC1.2 DCP
10-W	Divider 2	1.2 V on both D+ and D– Lines	BC1.2 DCP

9.2.3 Application Curves

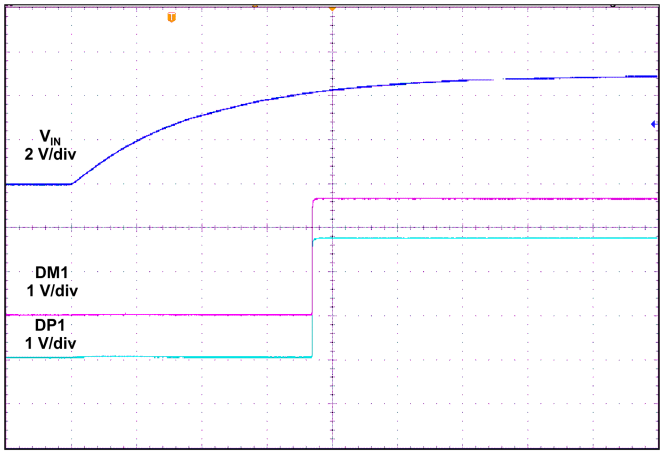

t - Time - 1 ms/div

Figure 18. POWER ON (DM1 and DP1)

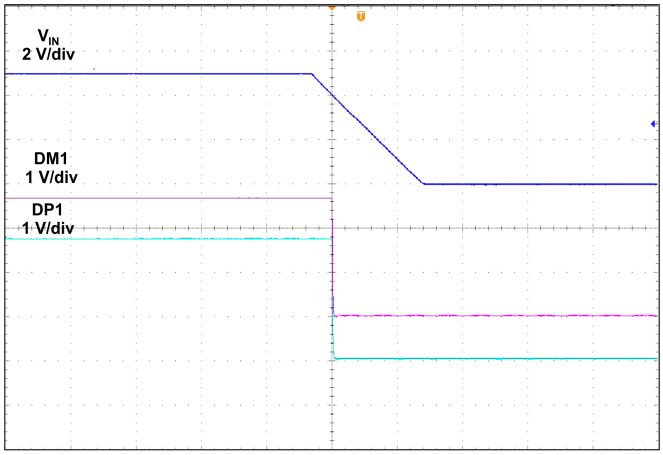

t - Time - 40 ms/div

Figure 19. POWER OFF (DM1 and DP1)

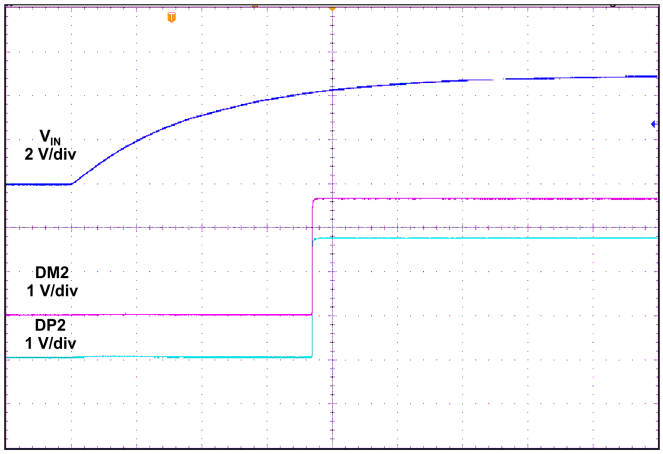

t - Time - 1 ms/div

Figure 20. POWER ON (DM2 and DP2)

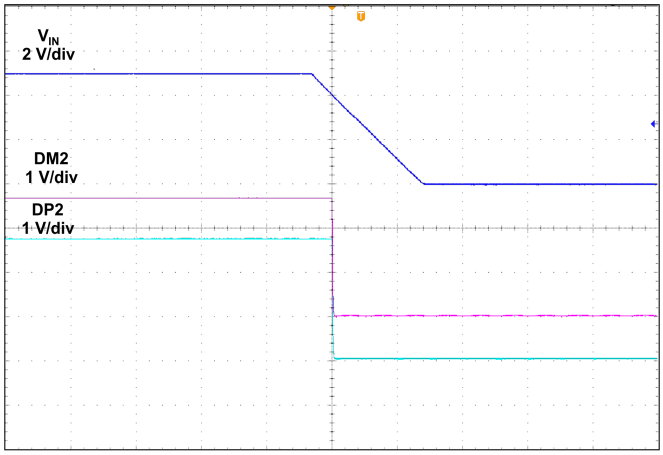

t - Time - 40 ms/div

Figure 21. POWER OFF (DM2 and DP2)

Copyright © 2013–2020, Texas Instruments Incorporated

10 Power Supply Recommendations

The devices are designed for a supply-voltage range of 4.5 V ≤ V_{IN} ≤ 5.5 V. If the input supply is placed more than a few inches from the device, an input ceramic bypass capacitor higher than 0.1 µF is recommended. The undervoltage lockout (UVLO) circuit disables DP1, DM1, DP2, and DM2 output voltage until the input voltage reaches the UVLO turnon threshold.

11 Layout

11.1 Layout Guidelines

Place the devices near the USB output connector and place the 0.1-µF bypass capacitor near the IN pin.

11.2 Layout Example

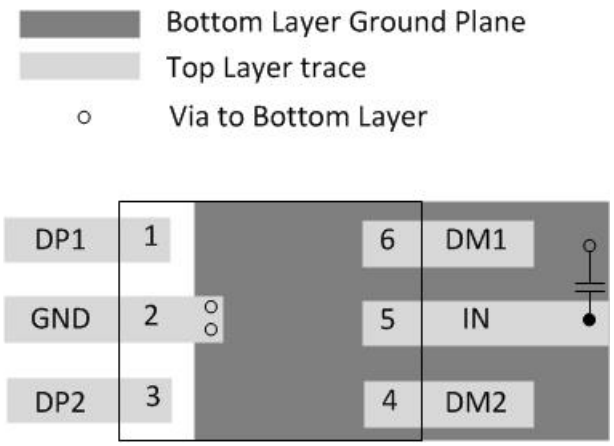

Figure 22. Layout Recommendation

12 Device and Documentation Support

12.1 Related Links

The table below lists quick access links. Categories include technical documents, support and community resources, tools and software, and quick access to sample or buy.

Table 5. Related Links

PARTS	PRODUCT FOLDER	SAMPLE & BUY	TECHNICAL DOCUMENTS	TOOLS & SOFTWARE	SUPPORT & COMMUNITY
TPS2513	Click here	Click here	Click here	Click here	Click here
TPS2513A	Click here	Click here	Click here	Click here	Click here
TPS2514	Click here	Click here	Click here	Click here	Click here
TPS2514A	Click here	Click here	Click here	Click here	Click here

12.2 Receiving Notification of Documentation Updates

To receive notification of documentation updates, navigate to the device product folder on ti.com. In the upper right corner, click on *Alert me* to register and receive a weekly digest of any product information that has changed. For change details, review the revision history included in any revised document.

12.3 Support Resources

TI E2E™ support forums are an engineer's go-to source for fast, verified answers and design help — straight from the experts. Search existing answers or ask your own question to get the quick design help you need.

Linked content is provided "AS IS" by the respective contributors. They do not constitute TI specifications and do not necessarily reflect TI's views; see TI's Terms of Use.

12.4 Trademarks

E2E is a trademark of Texas Instruments.
All other trademarks are the property of their respective owners.

12.5 Electrostatic Discharge Caution

These devices have limited built-in ESD protection. The leads should be shorted together or the device placed in conductive foam during storage or handling to prevent electrostatic damage to the MOS gates.

12.6 Glossary

SLYZ022 — *TI Glossary*.

This glossary lists and explains terms, acronyms, and definitions.

13 Mechanical, Packaging, and Orderable Information

The following pages include mechanical, packaging, and orderable information. This information is the most current data available for the designated devices. This data is subject to change without notice and revision of this document. For browser-based versions of this data sheet, refer to the left-hand navigation.

Copyright © 2013–2020, Texas Instruments Incorporated

PACKAGING INFORMATION

Orderable part number	Status (1)	Material type (2)	Package | Pins	Package qty | Carrier	RoHS (3)	Lead finish/ Ball material (4)	MSL rating/ Peak reflow (5)	Op temp (°C)	Part marking (6)
TPS2513ADBVR	Active	Production	SOT-23 (DBV) | 6	3000 | LARGE T&R	Yes	NIPDAU	Level-1-260C-UNLIM	-40 to 125	PB2Q
TPS2513ADBVR.A	Active	Production	SOT-23 (DBV) | 6	3000 | LARGE T&R	Yes	NIPDAU	Level-1-260C-UNLIM	-40 to 125	PB2Q
TPS2513ADBVRG4	Active	Production	SOT-23 (DBV) | 6	3000 | LARGE T&R	Yes	NIPDAU	Level-1-260C-UNLIM	-40 to 125	PB2Q
TPS2513ADBVRG4.A	Active	Production	SOT-23 (DBV) | 6	3000 | LARGE T&R	Yes	NIPDAU	Level-1-260C-UNLIM	-40 to 125	PB2Q
TPS2513ADBVT	Active	Production	SOT-23 (DBV) | 6	250 | SMALL T&R	Yes	NIPDAU	Level-1-260C-UNLIM	-40 to 125	PB2Q
TPS2513ADBVT.A	Active	Production	SOT-23 (DBV) | 6	250 | SMALL T&R	Yes	NIPDAU	Level-1-260C-UNLIM	-40 to 125	PB2Q
TPS2513DBVR	Active	Production	SOT-23 (DBV) | 6	3000 | LARGE T&R	Yes	NIPDAU | NIPDAU	Level-1-260C-UNLIM	-40 to 125	2513
TPS2513DBVR.A	Active	Production	SOT-23 (DBV) | 6	3000 | LARGE T&R	Yes	NIPDAU	Level-1-260C-UNLIM	-40 to 125	2513
TPS2513DBVT	Active	Production	SOT-23 (DBV) | 6	250 | SMALL T&R	Yes	NIPDAU | SN | NIPDAU	Level-1-260C-UNLIM	-40 to 125	2513
TPS2513DBVT.A	Active	Production	SOT-23 (DBV) | 6	250 | SMALL T&R	Yes	NIPDAU	Level-1-260C-UNLIM	-40 to 125	2513
TPS2514ADBVR	Active	Production	SOT-23 (DBV) | 6	3000 | LARGE T&R	Yes	NIPDAU	Level-1-260C-UNLIM	-40 to 125	PB3Q
TPS2514ADBVR.A	Active	Production	SOT-23 (DBV) | 6	3000 | LARGE T&R	Yes	NIPDAU	Level-1-260C-UNLIM	-40 to 125	PB3Q
TPS2514ADBVRG4	Active	Production	SOT-23 (DBV) | 6	3000 | LARGE T&R	Yes	NIPDAU	Level-1-260C-UNLIM	-40 to 125	PB3Q
TPS2514ADBVRG4.A	Active	Production	SOT-23 (DBV) | 6	3000 | LARGE T&R	Yes	NIPDAU	Level-1-260C-UNLIM	-40 to 125	PB3Q
TPS2514ADBVT	Active	Production	SOT-23 (DBV) | 6	250 | SMALL T&R	Yes	NIPDAU	Level-1-260C-UNLIM	-40 to 125	PB3Q
TPS2514ADBVT.A	Active	Production	SOT-23 (DBV) | 6	250 | SMALL T&R	Yes	NIPDAU	Level-1-260C-UNLIM	-40 to 125	PB3Q
TPS2514DBVR	Active	Production	SOT-23 (DBV) | 6	3000 | LARGE T&R	Yes	NIPDAU | SN | NIPDAU	Level-1-260C-UNLIM	-40 to 125	2514
TPS2514DBVR.A	Active	Production	SOT-23 (DBV) | 6	3000 | LARGE T&R	Yes	SN	Level-1-260C-UNLIM	-40 to 125	2514
TPS2514DBVRG4	Active	Production	SOT-23 (DBV) | 6	3000 | LARGE T&R	Yes	NIPDAU	Level-1-260C-UNLIM	-40 to 125	2514
TPS2514DBVRG4.A	Active	Production	SOT-23 (DBV) | 6	3000 | LARGE T&R	Yes	NIPDAU	Level-1-260C-UNLIM	-40 to 125	2514
TPS2514DBVT	Active	Production	SOT-23 (DBV) | 6	250 | SMALL T&R	Yes	NIPDAU | SN	Level-1-260C-UNLIM	-40 to 125	2514
TPS2514DBVT.A	Active	Production	SOT-23 (DBV) | 6	250 | SMALL T&R	Yes	SN	Level-1-260C-UNLIM	-40 to 125	2514

(1) **Status:** For more details on status, see our product life cycle.

(2) **Material type:** When designated, preproduction parts are prototypes/experimental devices, and are not yet approved or released for full production. Testing and final process, including without limitation quality assurance, reliability performance testing, and/or process qualification, may not yet be complete, and this item is subject to further changes or possible discontinuation. If available for ordering, purchases will be subject to an additional waiver at checkout, and are intended for early internal evaluation purposes only. These items are sold without warranties of any kind.

(3) **RoHS values:** Yes, No, RoHS Exempt. See the TI RoHS Statement for additional information and value definition.

(4) **Lead finish/Ball material:** Parts may have multiple material finish options. Finish options are separated by a vertical ruled line. Lead finish/Ball material values may wrap to two lines if the finish value exceeds the maximum column width.

(5) **MSL rating/Peak reflow:** The moisture sensitivity level ratings and peak solder (reflow) temperatures. In the event that a part has multiple moisture sensitivity ratings, only the lowest level per JEDEC standards is shown. Refer to the shipping label for the actual reflow temperature that will be used to mount the part to the printed circuit board.

(6) **Part marking:** There may be an additional marking, which relates to the logo, the lot trace code information, or the environmental category of the part.

Multiple part markings will be inside parentheses. Only one part marking contained in parentheses and separated by a "~" will appear on a part. If a line is indented then it is a continuation of the previous line and the two combined represent the entire part marking for that device.

Important Information and Disclaimer: The information provided on this page represents TI's knowledge and belief as of the date that it is provided. TI bases its knowledge and belief on information provided by third parties, and makes no representation or warranty as to the accuracy of such information. Efforts are underway to better integrate information from third parties. TI has taken and continues to take reasonable steps to provide representative and accurate information but may not have conducted destructive testing or chemical analysis on incoming materials and chemicals. TI and TI suppliers consider certain information to be proprietary, and thus CAS numbers and other limited information may not be available for release.

In no event shall TI's liability arising out of such information exceed the total purchase price of the TI part(s) at issue in this document sold by TI to Customer on an annual basis.

OTHER QUALIFIED VERSIONS OF TPS2513A, TPS2514A :

- Automotive : TPS2513A-Q1, TPS2514A-Q1

NOTE: Qualified Version Definitions:

- Automotive - Q100 devices qualified for high-reliability automotive applications targeting zero defects

TAPE AND REEL INFORMATION

REEL DIMENSIONS

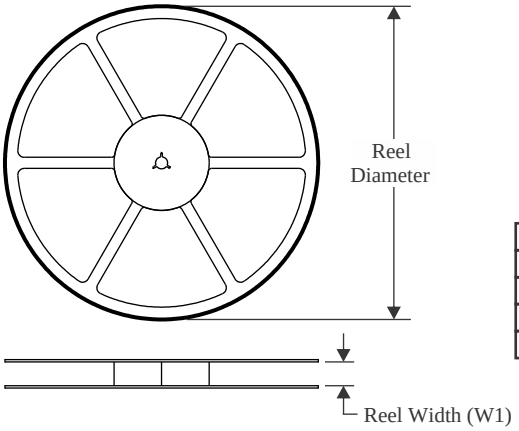

TAPE DIMENSIONS

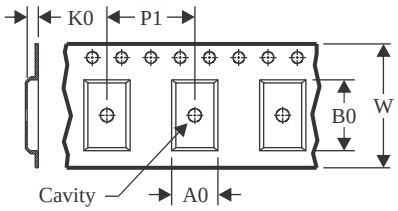

A0	Dimension designed to accommodate the component width
B0	Dimension designed to accommodate the component length
K0	Dimension designed to accommodate the component thickness
W	Overall width of the carrier tape
P1	Pitch between successive cavity centers

QUADRANT ASSIGNMENTS FOR PIN 1 ORIENTATION IN TAPE

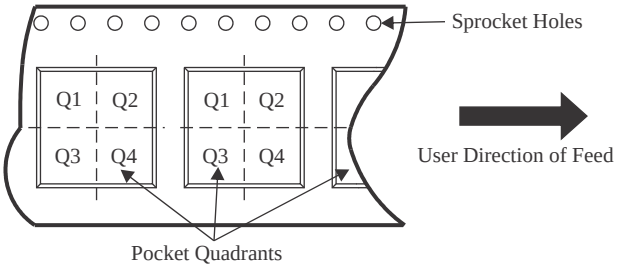

*All dimensions are nominal

Device	Package Type	Package Drawing	Pins	SPQ	Reel Diameter (mm)	Reel Width W1 (mm)	A0 (mm)	B0 (mm)	K0 (mm)	P1 (mm)	W (mm)	Pin1 Quadrant
TPS2513ADBVR	SOT-23	DBV	6	3000	178.0	9.0	3.23	3.17	1.37	4.0	8.0	Q3
TPS2513ADBVRG4	SOT-23	DBV	6	3000	178.0	9.0	3.23	3.17	1.37	4.0	8.0	Q3
TPS2513ADBVT	SOT-23	DBV	6	250	178.0	9.0	3.23	3.17	1.37	4.0	8.0	Q3
TPS2513DBVR	SOT-23	DBV	6	3000	178.0	9.0	3.23	3.17	1.37	4.0	8.0	Q3
TPS2513DBVT	SOT-23	DBV	6	250	178.0	9.0	3.23	3.17	1.37	4.0	8.0	Q3
TPS2514ADBVR	SOT-23	DBV	6	3000	178.0	9.0	3.23	3.17	1.37	4.0	8.0	Q3
TPS2514ADBVRG4	SOT-23	DBV	6	3000	178.0	9.0	3.23	3.17	1.37	4.0	8.0	Q3
TPS2514ADBVT	SOT-23	DBV	6	250	178.0	9.0	3.23	3.17	1.37	4.0	8.0	Q3
TPS2514DBVR	SOT-23	DBV	6	3000	180.0	8.4	3.2	3.2	1.4	4.0	8.0	Q3
TPS2514DBVRG4	SOT-23	DBV	6	3000	180.0	8.4	3.2	3.2	1.4	4.0	8.0	Q3
TPS2514DBVT	SOT-23	DBV	6	250	180.0	8.4	3.2	3.2	1.4	4.0	8.0	Q3

TAPE AND REEL BOX DIMENSIONS

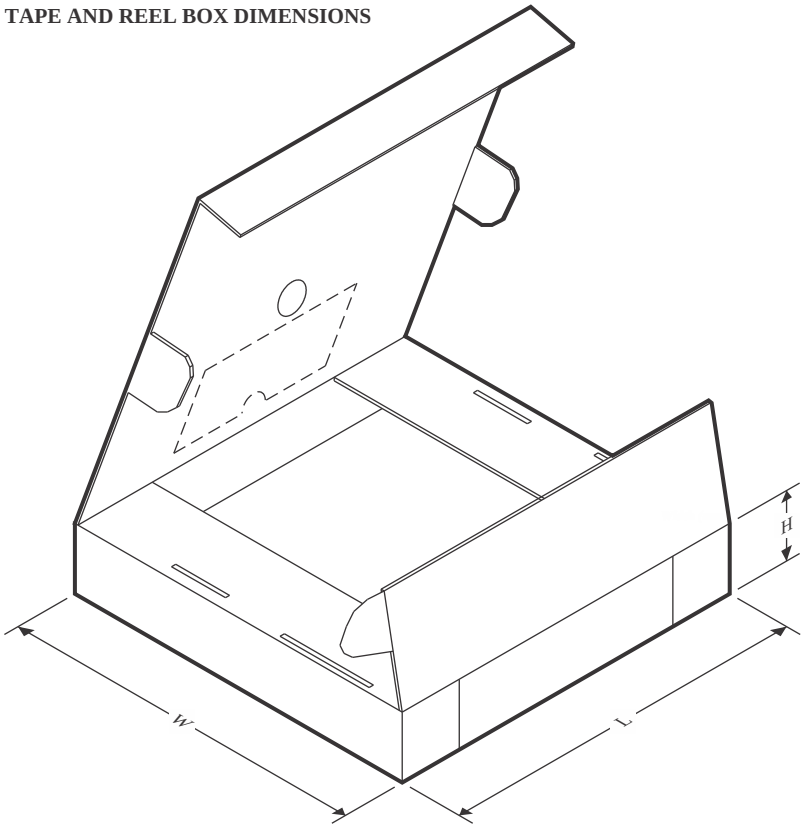

*All dimensions are nominal

Device	Package Type	Package Drawing	Pins	SPQ	Length (mm)	Width (mm)	Height (mm)
TPS2513ADBVR	SOT-23	DBV	6	3000	180.0	180.0	18.0
TPS2513ADBVRG4	SOT-23	DBV	6	3000	180.0	180.0	18.0
TPS2513ADBVT	SOT-23	DBV	6	250	180.0	180.0	18.0
TPS2513DBVR	SOT-23	DBV	6	3000	180.0	180.0	18.0
TPS2513DBVT	SOT-23	DBV	6	250	180.0	180.0	18.0
TPS2514ADBVR	SOT-23	DBV	6	3000	180.0	180.0	18.0
TPS2514ADBVRG4	SOT-23	DBV	6	3000	180.0	180.0	18.0
TPS2514ADBVT	SOT-23	DBV	6	250	180.0	180.0	18.0
TPS2514DBVR	SOT-23	DBV	6	3000	210.0	185.0	35.0
TPS2514DBVRG4	SOT-23	DBV	6	3000	210.0	185.0	35.0
TPS2514DBVT	SOT-23	DBV	6	250	210.0	185.0	35.0

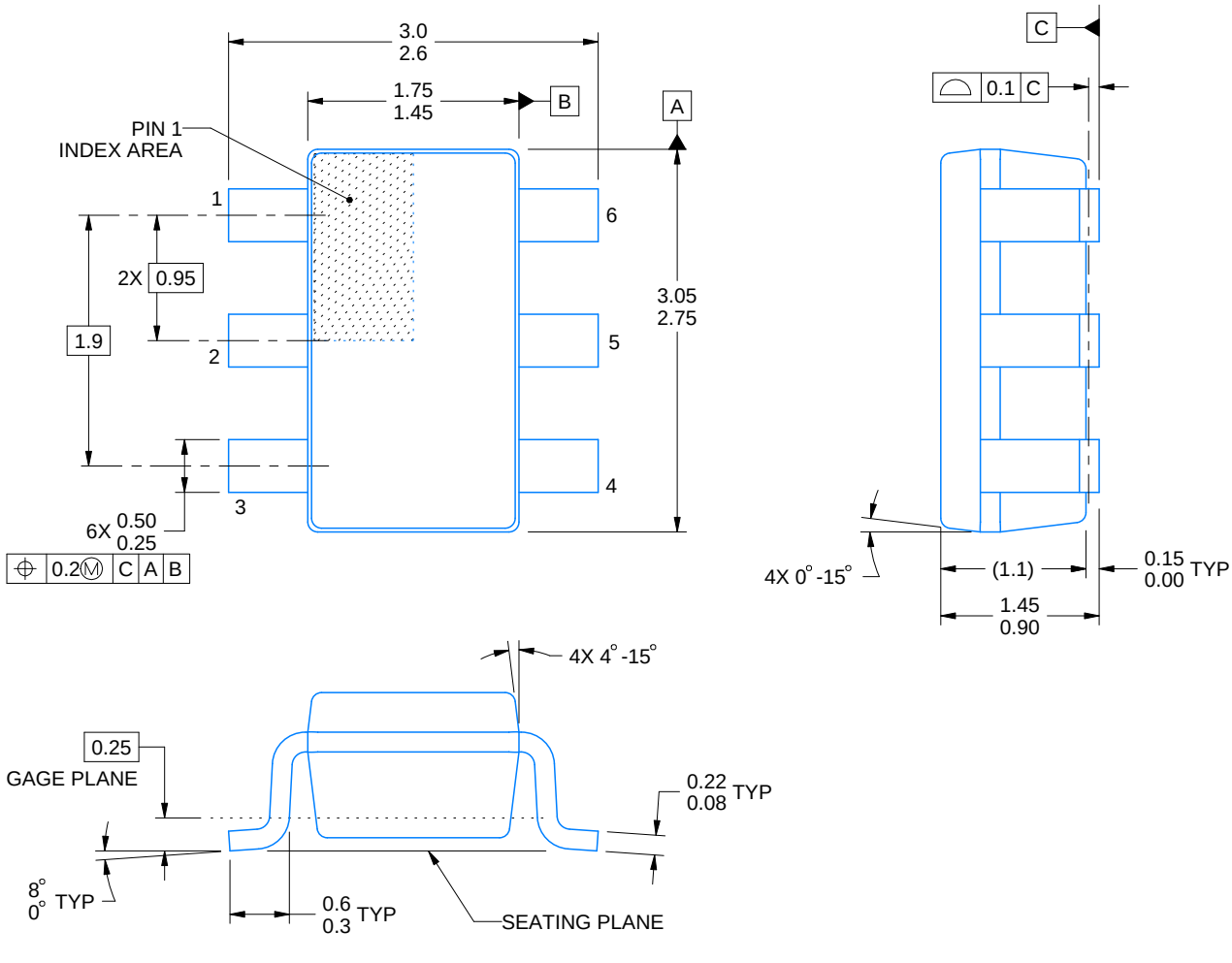

4214840/G 08/2024

NOTES:

1. All linear dimensions are in millimeters. Any dimensions in parenthesis are for reference only. Dimensioning and tolerancing per ASME Y14.5M.
2. This drawing is subject to change without notice.
3. Body dimensions do not include mold flash or protrusion. Mold flash and protrusion shall not exceed 0.25 per side.
4. Leads 1,2,3 may be wider than leads 4,5,6 for package orientation.
5. Refernce JEDEC MO-178.

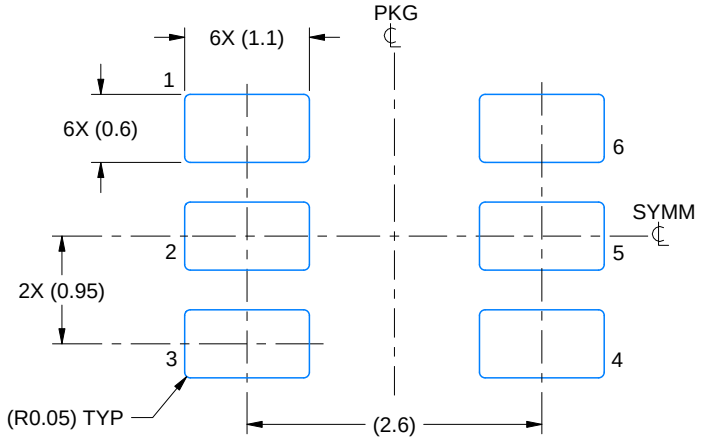

LAND PATTERN EXAMPLE
EXPOSED METAL SHOWN
SCALE:15X

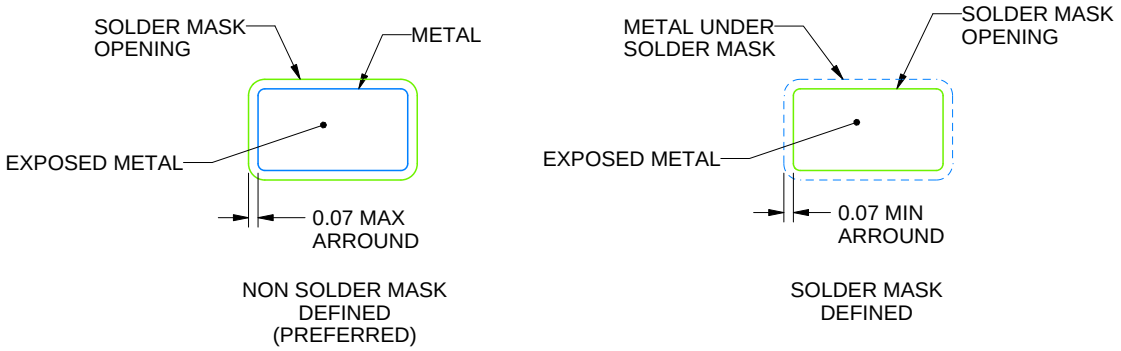

SOLDER MASK DETAILS

4214840/G 08/2024

NOTES: (continued)

6. Publication IPC-7351 may have alternate designs.
7. Solder mask tolerances between and around signal pads can vary based on board fabrication site.

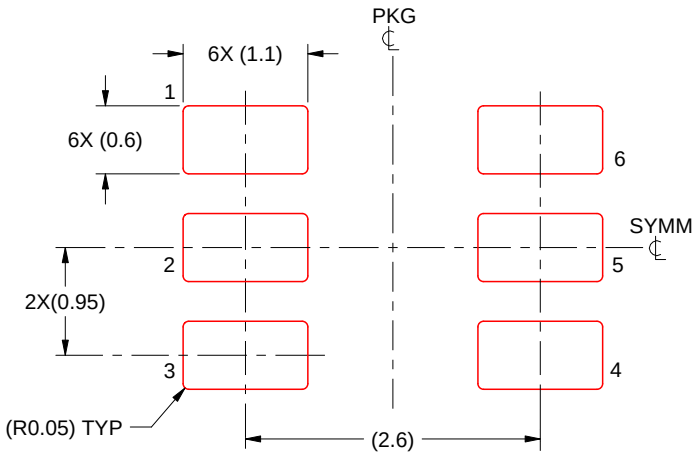

SOLDER PASTE EXAMPLE
BASED ON 0.125 mm THICK STENCIL
SCALE:15X

4214840/G 08/2024

NOTES: (continued)

8. Laser cutting apertures with trapezoidal walls and rounded corners may offer better paste release. IPC-7525 may have alternate design recommendations.
9. Board assembly site may have different recommendations for stencil design.

IMPORTANT NOTICE AND DISCLAIMER

TI PROVIDES TECHNICAL AND RELIABILITY DATA (INCLUDING DATA SHEETS), DESIGN RESOURCES (INCLUDING REFERENCE DESIGNS), APPLICATION OR OTHER DESIGN ADVICE, WEB TOOLS, SAFETY INFORMATION, AND OTHER RESOURCES “AS IS” AND WITH ALL FAULTS, AND DISCLAIMS ALL WARRANTIES, EXPRESS AND IMPLIED, INCLUDING WITHOUT LIMITATION ANY IMPLIED WARRANTIES OF MERCHANTABILITY, FITNESS FOR A PARTICULAR PURPOSE OR NON-INFRINGEMENT OF THIRD PARTY INTELLECTUAL PROPERTY RIGHTS.

These resources are intended for skilled developers designing with TI products. You are solely responsible for (1) selecting the appropriate TI products for your application, (2) designing, validating and testing your application, and (3) ensuring your application meets applicable standards, and any other safety, security, regulatory or other requirements.

These resources are subject to change without notice. TI grants you permission to use these resources only for development of an application that uses the TI products described in the resource. Other reproduction and display of these resources is prohibited. No license is granted to any other TI intellectual property right or to any third party intellectual property right. TI disclaims responsibility for, and you will fully indemnify TI and its representatives against, any claims, damages, costs, losses, and liabilities arising out of your use of these resources.

TI’s products are provided subject to TI’s Terms of Sale or other applicable terms available either on ti.com or provided in conjunction with such TI products. TI’s provision of these resources does not expand or otherwise alter TI’s applicable warranties or warranty disclaimers for TI products.

TI objects to and rejects any additional or different terms you may have proposed.

Mailing Address: Texas Instruments, Post Office Box 655303, Dallas, Texas 75265
Copyright © 2025, Texas Instruments Incorporated