LM2770 High Efficiency Switched Capacitor Step-Down DC/DC Regulator with Sleep Mode

Check for Samples: LM2770

FEATURES

- **High Efficiency Multi-Gain Architecture: Peak Power Efficiency >85%**
- **Output Voltage Pairs: 1.2V/1.5V and 1.2V/1.575V**
- **Dynamic Output Voltage Selection**
- **±3% Output Voltage Accuracy**
- **Output Currents up to 250mA**
- **2.7V to 5.5V Input Range**
- **Low-Supply-Current Sleep Mode**
- **55µA Quiescent Supply Current in Full-Power Mode**
- **Soft-Start**
- **Short-Circuit Protection in Full-Power Mode**
- **Current-Limit Protection in Sleep Mode**
- **WSON-10 Package (3mm × 3mm × 0.8mm)**

APPLICATIONS

- **DSP Power Supplies**
- **Baseband Power Supplies**
- **Mobile Phones and Pagers**
- **Portable Electronic Equipment**

DESCRIPTION

The LM2770 is a switched capacitor step-down regulator that is ideal for powering low-voltage applications in portable systems. The LM2770 can supply load currents up to 250mA and operates over an input voltage range of 2.7V to 5.5V. This makes the LM2770 a great choice for systems powered by 1-cell Li-Ion batteries and chargers. The output voltage of the LM2770 can be dynamically switched between two output levels with a logic input pin. Output voltage pairs currently available include 1.2V/1.5V and 1.2V/1.575V. Other pairs of voltage options can be developed upon request.

Typical Application Circuit

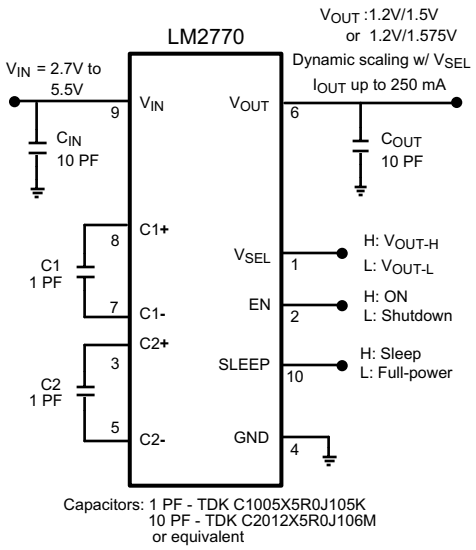

Figure 1.

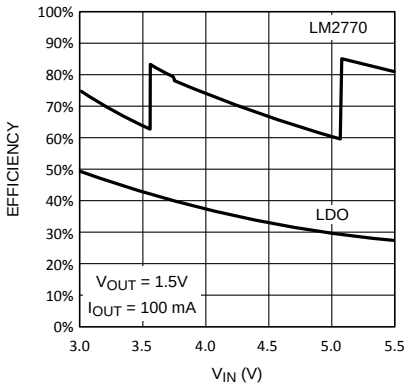

Figure 2. LM2770 Efficiency vs. Low-Dropout Linear Regulator (LDO) Efficiency

Please be aware that an important notice concerning availability, standard warranty, and use in critical applications of Texas Instruments semiconductor products and disclaimers thereto appears at the end of this data sheet.

All trademarks are the property of their respective owners.

PRODUCTION DATA information is current as of publication date. Products conform to specifications per the terms of the Texas Instruments standard warranty. Production processing does not necessarily include testing of all parameters.

Copyright © 2004–2013, Texas Instruments Incorporated

DESCRIPTION (CONTINUED)

LM2770 efficiency is superior to both fixed-gain switched capacitor buck regulators and low-dropout linear regulators (LDO's). Multiple fractional gains maximize power efficiency over the entire input voltage and output current ranges. The LM2770 can also be switched into a low-power sleep mode when load currents are light (≤ 20mA). In sleep mode, the charge pump is off, and the output is driven with a low-noise, low-power linear regulator.

Soft-start, short-circuit protection, current-limit protection, and thermal-shutdown protection are also included. The LM2770 is available in TI's small 10-pin Leadless Leadframe Package (WSON-10).

Connection Diagram

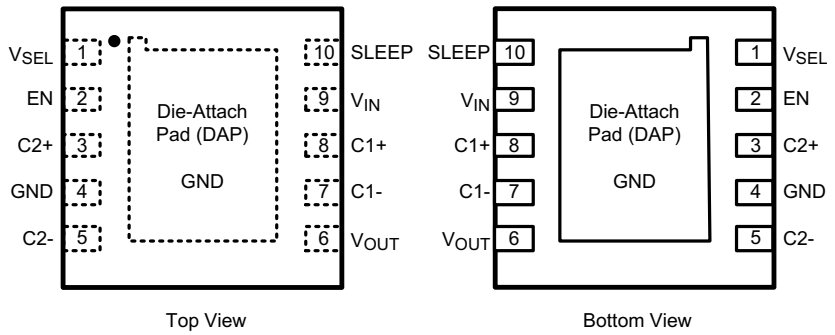

Figure 3. 10-Pin Non-Pullback Leadless Frame Package (WSON-10)
See Package Number DSC0010A

Pin Description

Pin #	Name	Description
1	V_{SEL}	Output Voltage Select Logic Input. If V_{SEL} is high, V_{OUT} = high voltage. If V_{SEL} is low, V_{OUT} = low voltage. (See Order Information for available voltage options)
2	EN	Enable Pin Logic Input. If high, part is enabled. If low, part is in shutdown.
3	C2+	Flying Capacitor 2: Positive Terminal
4	GND	Ground
5	C2-	Flying Capacitor 2: Negative terminal
10	SLEEP	Sleep Mode Logic Input. If high, the part operates in sleep mode, and the output is driven by a low power linear regulator. If low, the part operates in full-power mode, and the output is driven by the switched capacitor regulator
9	V_{IN}	Input Voltage. Recommended V_{IN} operating range: 2.7V to 5.5V
8	C1+	Flying Capacitor 1: Positive Terminal
7	C1-	Flying Capacitor 1: Negative Terminal
6	V_{OUT}	Output Voltage

These devices have limited built-in ESD protection. The leads should be shorted together or the device placed in conductive foam during storage or handling to prevent electrostatic damage to the MOS gates.

Copyright © 2004–2013, Texas Instruments Incorporated

Absolute Maximum Ratings[1][2][3]

V_{IN} Pin Voltage		-0.3V to 6.0V
EN, SLEEP, and V_{SEL} Pin Voltages		-0.3V to (V_{IN}+0.3V) w/ 6.0V max
Continuous Power Dissipation[4]		Internally Limited
V_{OUT} Short to GND Duration[5]		Infinite
Junction Temperature (T_{J-MAX})		150ºC
Storage Temperature Range		-65ºC to +150º C
Maximum Lead Temperature[6]		265ºC
ESD Rating[7]	Human Body Model	2.0kV
	Machine Model	200V

(1) Absolute Maximum Ratings indicate limits beyond which damage to the component may occur. Operating Ratings are conditions under which operation of the device is specified. Operating Ratings do not imply specified performance limits. For specified performance limits and associated test conditions, see the Electrical Characteristics tables.
(2) All voltages are with respect to the potential at the GND pin.
(3) If Military/Aerospace specified devices are required, please contact the Texas Instruments Sales Office/ Distributors for availability and specifications.
(4) Internal thermal shutdown circuitry protects the device from permanent damage. Thermal shutdown engages at T_J=150ºC (typ.) and disengages at T_J=140ºC (typ.).
(5) Short circuit protection circuitry protects the part from immediate destructive failure when V_{OUT} is shorted to GND. Applying a continuous GND short to the output may shorten the lifetime of the device.
(6) For detailed information on soldering requirements and recommendations, please refer to Texas Instruments' Application Note 1187 (Literature Number SNOA401): Leadless Leadframe Package (LLP).
(7) The Human body model is a 100pF capacitor discharged through a 1.5kΩ resistor into each pin. The machine model is a 200pF capacitor discharged directly into each pin. MIL-STD-883 3015.7

Operating Ratings[1][2]

Input Voltage Range	2.7V to 5.5V
Recommended Load Current Range	0mA to 250mA
Junction Temperature (T_J) Range	-30°C to +105°C
Ambient Temperature (T_A) Range[3]	-30°C to +85°C

(1) Absolute Maximum Ratings indicate limits beyond which damage to the component may occur. Operating Ratings are conditions under which operation of the device is specified. Operating Ratings do not imply specified performance limits. For specified performance limits and associated test conditions, see the Electrical Characteristics tables.
(2) All voltages are with respect to the potential at the GND pin.
(3) Maximum ambient temperature (T_{A-MAX}) is dependent on the maximum operating junction temperature ($T_{J-MAX-OP}$ = 105ºC), the maximum power dissipation of the device in the application (P_{D-MAX}), and the junction-to ambient thermal resistance of the part/package in the application (θ_{JA}), as given by the following equation: $T_{A-MAX} = T_{J-MAX-OP} - (\theta_{JA} \times P_{D-MAX})$.

Thermal Properties

Juntion-to-Ambient Thermal Resistance (θ_{JA}), WSON10 Package[1]	55°C/W

(1) Junction-to-ambient thermal resistance is highly application and board-layout dependent. In applications where high maximum power dissipation exists, special care must be paid to thermal dissipation issues.

Copyright © 2004–2013, Texas Instruments Incorporated

Electrical Characteristics[1][2]

Limits in standard typeface are for T_J = 25ºC. Limits in **boldface** type apply over the full operating junction temperature range (-30°C ≤ T_J ≤ +105°C) . Unless otherwise noted, specifications apply to the LM2770 Typical Application Circuit (pg. 1) with: V_{IN} = 3.6V; V(EN) = V_{SEL} = 1.8V, V(SLEEP) = 0V, C_{IN} = C_{OUT} = 10µF, C_1 = C_2 = 1.0µF.[3]

Symbol	Parameter	Condition	Min	Typ	Max	Units
Output Voltage Specifications: Specific to Individual LM2770 Options						
$V_{OUT-1215}$	LM2770-1215: 1.5V Output Voltage Regulation	V_{IN} = 3.5V, I_{OUT} = 150mA, V_{SEL} = 1.8V	1.443	1.495	1.547	V
		3.0V ≤ V_{IN} ≤ 4.5V I_{OUT} = 150mA, V_{SEL} = 1.8V	**1.420**	1.495	**1.570**	
		4.5V < V_{IN} ≤ 5.5V, I_{OUT} = 150mA, V_{SEL} = 1.8V	1.428	1.495	1.562	
	LM2770-1215: 1.2V Output Voltage Regulation	V_{IN} = 3.5V, I_{OUT} = 150mA, V_{SEL} = 0V	1.157	1.205	1.253	
		3.0V ≤ V_{IN} ≤ 4.5V I_{OUT} - 150mA, V_{SEL} =0V	**1.140**	1.205	**1.270**	
		4.5V < V_{IN} ≤ 5.5V, I_{OUT} = 150mA, V_{SEL} = 0V	1.135	1.205	1.275	
$V_{OUT-12157}$	LM2770-12157: 1.575V Output Voltage Regulation	V_{IN} = 3.5V, I_{OUT} = 150mA, V_{SEL} = 1.8V	1.528	1.575	1.622	V
		3.1V ≤ V_{IN} ≤ 4.5V I_{OUT} = 150mA, V_{SEL} = 1.8V	**1.500**	1.575	**1.650**	
		4.5V < V_{IN} ≤ 5.5V, I_{OUT} = 150mA, V_{SEL} = 1.8V	1.504	1.575	1.646	
	LM2770-12157: 1.2V Output Voltage Regulation	V_{IN} = 3.5V, I_{OUT} = 150mA, V_{SEL} = 0V	1.162	1.210	1.258	
		3.0V ≤ V_{IN} ≤ 4.5V I_{OUT} - 150mA, V_{SEL} =0V	**1.145**	1.210	**1.275**	
		4.5V < V_{IN} ≤ 5.5V, I_{OUT} = 150mA, V_{SEL} = 0V	1.145	1.210	1.275	
V_{OUT}/I_{OUT}	Load Regulation	I_{OUT} = 1mA to 250mA		0.18		mV/mA
$V_{LDO-1215}$	LM2770-1215: 1.5V Output Voltage Regulation - SLEEP Mode	3.0V ≤ V_{IN} ≤ 5.5V, 0mA ≤ I_{OUT} ≤ 20mA, V_{SEL}= 0V, V(SLEEP) = 1.8V	**1.435**	1.495	**1.555**	V
	LM2770-1215: 1.2V Output Voltage Regulation - SLEEP Mode	3.0V ≤ V_{IN} ≤ 5.5V, 0mA ≤ I_{OUT} ≤ 20mA, V_{SEL} = 0V, V(SLEEP) = 1.8V	**1.145**	1.205	**1.265**	
$V_{LDO-12157}$	LM2770-12157: 1.575V Output Voltage Regulation - SLEEP Mode	3.0V ≤ V_{IN} ≤ 5.5V, 0mA ≤ I_{OUT} ≤ 20mA, V_{SEL}= 0V, V(SLEEP) = 1.8V	**1.520**	1.575	**1.630**	V
	LM2770-12157: 1.2V Output Voltage Regulation - SLEEP Mode	3.0V ≤ V_{IN} ≤ 5.5V, 0mA ≤ I_{OUT} ≤ 20mA, V_{SEL} = 0V, V(SLEEP) = 1.8V	**1.150**	1.210	**1.270**	

(1) All voltages are with respect to the potential at the GND pin.
(2) Min and Max limits are specified by design, test, or statistical analysis. Typical numbers are not ensured, but do represent the most likely norm.
(3) C_{IN}, C_{OUT}, C_1, and C_2 : Low-ESR Surface-Mount Ceramic Capacitors (MLCCs) used in setting electrical characteristics.

Copyright © 2004–2013, Texas Instruments Incorporated

Electrical Characteristics[1][2] (continued)

Limits in standard typeface are for T_J = 25ºC. Limits in **boldface** type apply over the full operating junction temperature range (-30°C ≤ T_J ≤ +105°C) . Unless otherwise noted, specifications apply to the LM2770 Typical Application Circuit (pg. 1) with: V_{IN} = 3.6V; V(EN) = V_{SEL} = 1.8V, V(SLEEP) = 0V, C_{IN} = C_{OUT} = 10µF, C_1 = C_2 = 1.0µF.[3]

Symbol	Parameter	Condition	Min	Typ	Max	Units
Specifications Below Apply to All LM2770 Options						
E	Power Efficiency	V_{IN} = 3.6V, I_{OUT} = 150mA V_{OUT} =1.5V		82		%
E_{AVG}	Average Eficiency over Li-Ion Input Voltage Range[4]	3.0V ≤ V_{IN} ≤ 4.2V I_{OUT} = 200mA, V_{OUT} = 1.5V		73		%
I_Q	Quiescent Supply Current: Full-power Mode	2.7V ≤ V_{IN} ≤ 5.5V I_{OUT} = 0mA V(SLEEP) = 0V		55	**75**	µA
I_{SLEEP}	Quiescent Supply Current: Sleep Mode	2.7V ≤ V_{IN} ≤ 5.5V I_{OUT} = 0mA V(SLEEP) = 1.8V		50	**65**	µA
I_{SD}	Shutdown Current	2.7V ≤ V_{IN} ≤ 5.5V V(EN) = 0V		0.1	**0.5**	µA
I_{CL}	Current Limit - Sleep Mode	0V ≤ V_{OUT} ≤ 0.2V V(SLEEP) = 1.8V		60		mA
t_{ON}	Turn-on Time	V_{IN} = 3.6V, C_{OUT} = 10µF		200		µs
F_{SW}	Switching Frequency	2.7V ≤ V_{IN} ≤ 5.5V	**475**	700	**925**	kHz
Logic Pin Specifications: EN, ENA, ENB						
V_{IL}	Logic-low Input Voltage	2.7V ≤ V_{IN} ≤ 5.5V	**0**		**0.4**	V
V_{IH}	Logic-high Input Voltage	2.7V ≤ V_{IN} ≤ 5.5V	**1.0**		**V_{IN}**	V
I_{IH}	Logic-high Input Current: SLEEP and V_{SEL} pins	Logic Input = 3.0V		0.1		µA
I_{IH-EN}	Logic-high Input Current: EN pin[5]	V(EN) = 1.8V		6		µA
I_{IL}	Logic-low Input Current: All Logic Pins	Logic Input = 0V		0		µA

(4) Efficiency is measured versus V_{IN}, with V_{IN} being swept in small increments from 3.0V to 4.2V. The average is calculated from these measurement results. Weighting to account for battery voltage discharge characteristics (V_{BAT} vs. Time) is not done in computing the average.
(5) There is a 300kΩ pull-down resistor connected internally between the EN pin and GND.

Copyright © 2004–2013, Texas Instruments Incorporated

Block Diagram

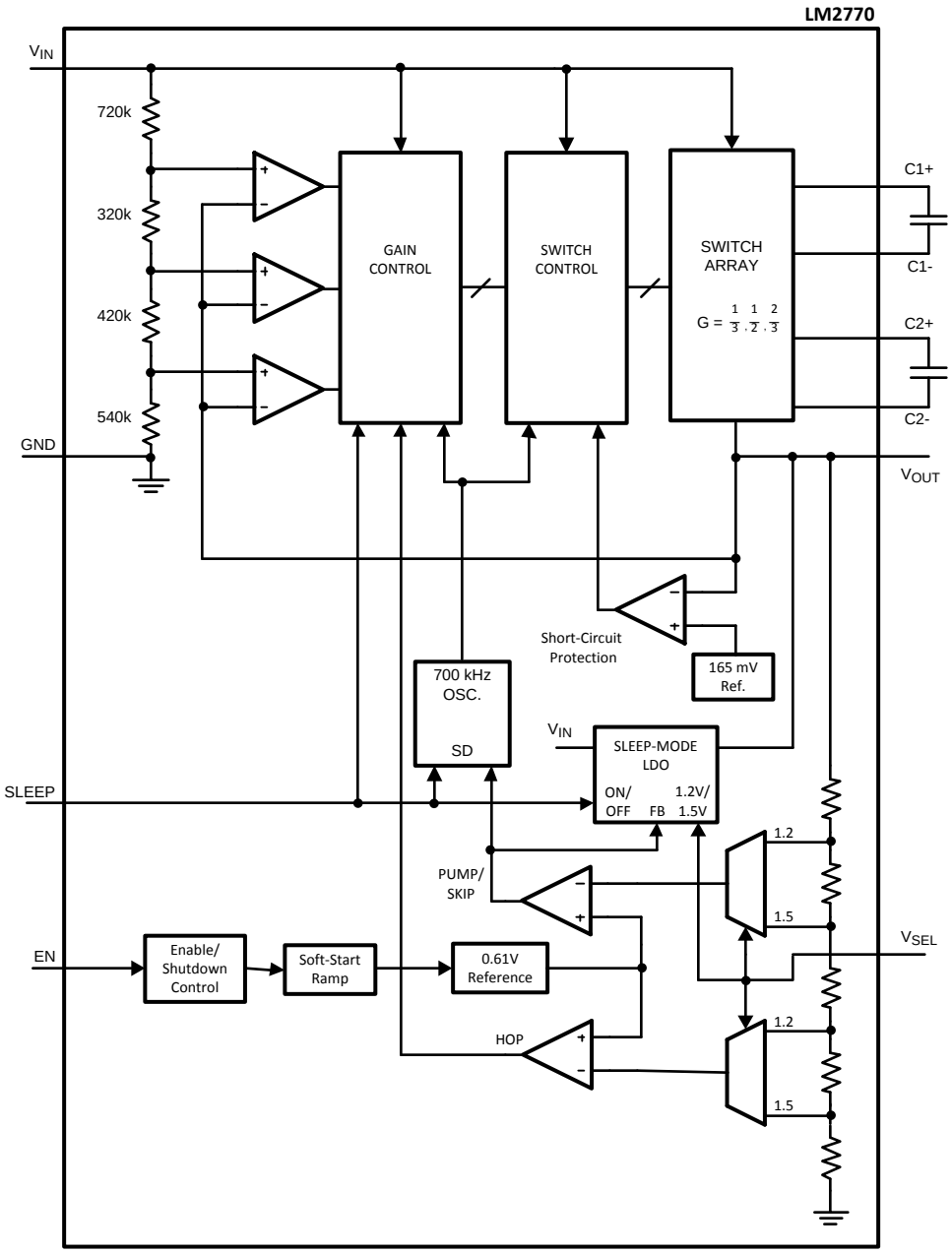

Copyright © 2004–2013, Texas Instruments Incorporated

Typical Performance Characteristics

Unless otherwise specified: C_{IN} = 10µF, C1 = 1.0µF, C2 = 1.0µF, C_{OUT} = 10µF, T_A = 25ºC. Capacitors are low-ESR multi-layer ceramic capacitors (MLCC's).

Output Voltage vs. Input Voltage: V_{OUT} = 1.2V

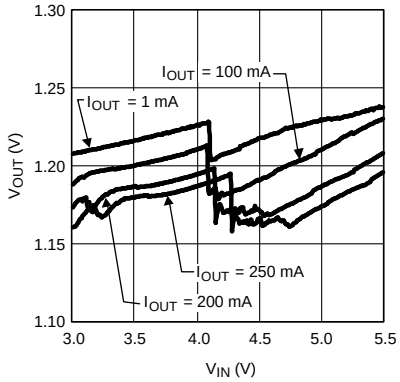

Figure 4.

Efficiency vs. Input Voltage: V_{OUT} = 1.2V

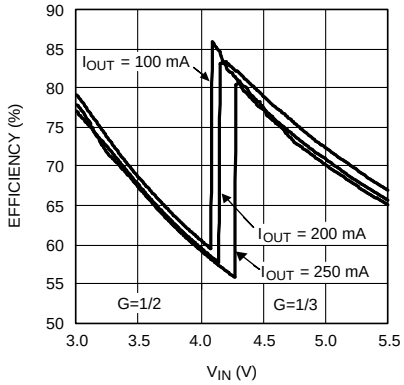

Figure 5.

Output Voltage vs. Input Voltage: V_{OUT} = 1.5V

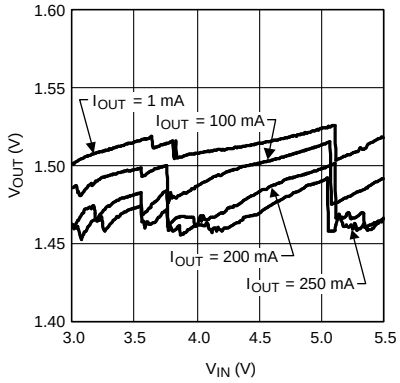

Figure 6.

Efficiency vs. Input Voltage: V_{OUT} = 1.5V

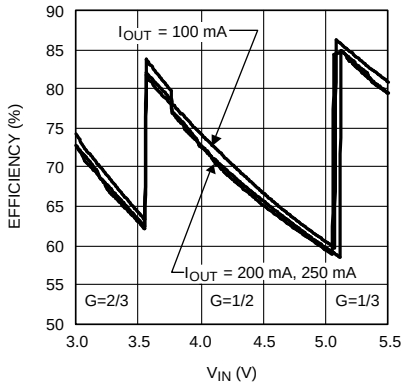

Figure 7.

Output Voltage vs. Input Voltage: V_{OUT} = 1.575V

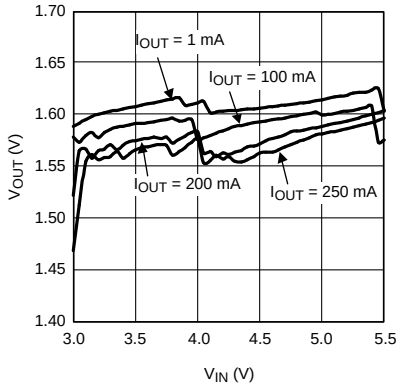

Figure 8.

Efficiency vs. Input Voltage: V_{OUT} = 1.575V

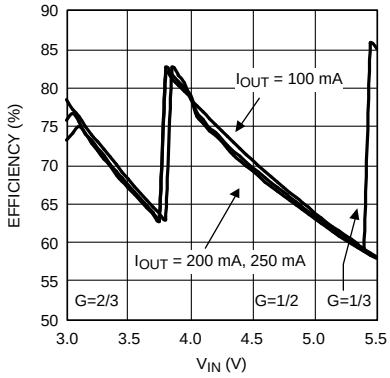

Figure 9.

Copyright © 2004–2013, Texas Instruments Incorporated

Typical Performance Characteristics (continued)

Unless otherwise specified: C_{IN} = 10µF, C1 = 1.0µF, C2 = 1.0µF, C_{OUT} = 10µF, T_A = 25ºC. Capacitors are low-ESR multi-layer ceramic capacitors (MLCC's).

Load Regulation: V_{OUT} = 1.2V

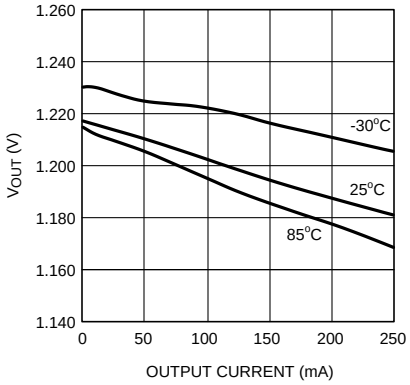

Figure 10.

Load Regulation: V_{OUT} = 1.5V

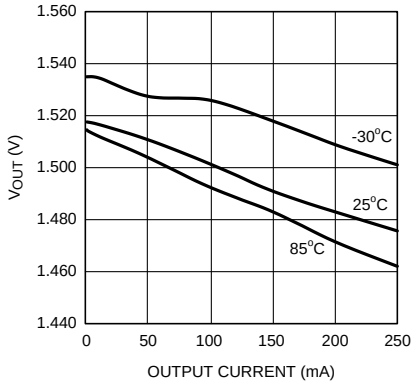

Figure 11.

Load Regulation: V_{OUT} = 1.575V

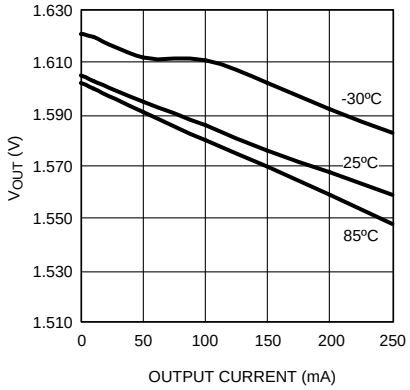

Figure 12.

Output Voltage Ripple

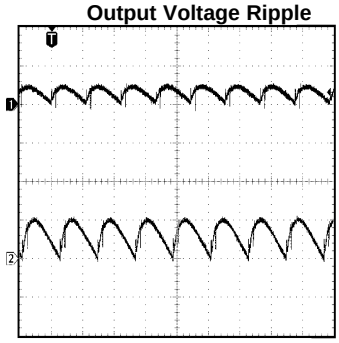

V_{IN} = 3.6V, V_{OUT} = 1.5V, I_{OUT} = 200mA
CH1: C_{IN} = C_{OUT} = 2×10µF; C1 = C2 = 1µF; Scale: 50mV/Div
CH2: C_{IN} = C_{OUT} = 10µF; C1 = C2 = 1µF; Scale: 50mV/Div
Time scale: 4µs/Div

Figure 13.

Input Voltage Ripple

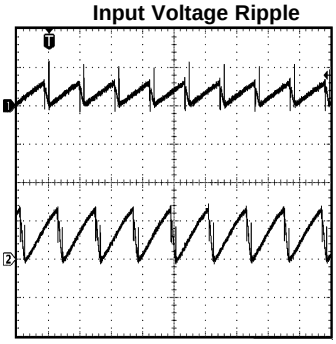

V_{IN} = 3.6V, V_{OUT} = 1.5V, I_{OUT} = 200mA
CH1: C_{IN} = C_{OUT} = 2×10µF; C1 = C2 = 1µF; Scale: 50mV/Div
CH2: C_{IN} = C_{OUT} = 10µF; C1 = C2 = 1µF; Scale: 50mV/Div
Time scale: 4µs/Div

Figure 14.

Start-up Behavior

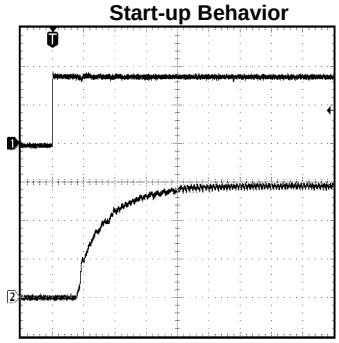

V_{IN} = 3.6V, V_{OUT} = 1.5V, Load = 7.5Ω (200mA)
CH1: EN pin; Scale: 1V/Div
CH2: V_{OUT}; Scale: 500mV/Div
Time scale: 40µs/Div

Figure 15.

Copyright © 2004–2013, Texas Instruments Incorporated

Typical Performance Characteristics (continued)

Unless otherwise specified: C_{IN} = 10µF, C1 = 1.0µF, C2 = 1.0µF, C_{OUT} = 10µF, T_A = 25ºC. Capacitors are low-ESR multi-layer ceramic capacitors (MLCC's).

Load Step

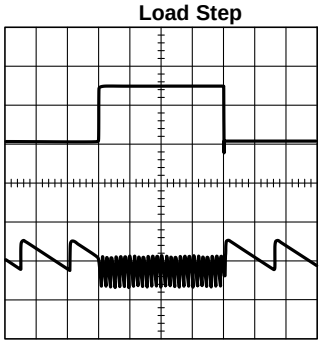

V_{IN} = 3.6V, V_{OUT} = 1.5V, Load = 10mA - 150mA step
CH1 (top): Output Current; Scale: 100mA/Div
CH2: V_{OUT}; Scale: 100mV/Div
Time scale: 40µs/Div

Figure 16.

Active-to-Sleep Mode Transitions

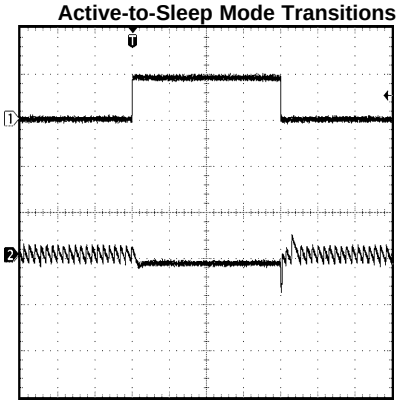

V_{IN} = 3.6V, V_{OUT} = 1.5V, Load = 20mA
CH1: SLEEP pin; Scale: 2V/Div
CH2: V_{OUT}; Scale: 200mV/Div
Time scale: 200µs/Div

Figure 17.

Dynamic Output Voltage Switching: 1.5V to 1.2V

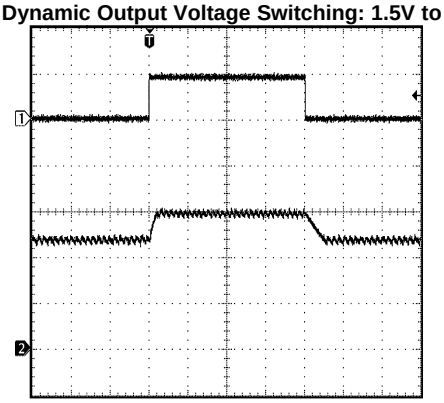

V_{IN} = 3.6V, V_{OUT} = 1.5V, Load = 10mA - 150mA step
CH1: V_{SEL} pin; Scale: 2V/Div
CH2: V_{OUT}; Scale: 500mV/Div
Time scale: 40µs/Div

Figure 18.

OPERATION DESCRIPTION

OVERVIEW

The LM2770 is a switched capacitor converter that produces a regulated low voltage output. The core of the part is a highly efficient charge pump that utilizes multiple fractional gains and pulse-frequency-modulated (PFM) switching to minimize power losses over wide input voltage and output current ranges. A description of the principal operational characteristics of the LM2770 is broken up into the following sections: PFM REGULATION, FRACTIONAL MULTI-GAIN CHARGE PUMP, and MULTI-GAIN EFFICIENCY PERFORMANCE . Each of these sections refers to the Block Diagram.

PFM REGULATION

The LM2770 achieves tightly regulated output voltages with pulse-frequency-modulated (PFM) regulation. PFM simply means the part only pumps when charge needs to be delivered to the output in order to keep the output voltage in regulation. When the output voltage is above the target regulation voltage, the part idles and consumes minimal supply-current. In this state, the load current is supplied solely by the charge stored on the output capacitor. As this capacitor discharges and the output voltage falls below the target regulation voltage, the charge pump activates, and charge is delivered to the output. This charge supplies the load current and boosts the voltage on the output capacitor.

The primary benefit of PFM regulation is when output currents are light and the part is predominantly in the low-supply-current idle state. Net supply current is minimal because the part only occasionally needs to recharge the output capacitor by activating the charge pump. With PFM regulation, input and output ripple frequencies vary significantly, and are dependent on output current, input voltage, and, to a lesser degree, other factors such as temperature and internal switch characteristics.

FRACTIONAL MULTI-GAIN CHARGE PUMP

The core of the LM2770 is a two-phase charge pump controlled by an internally generated non-overlapping clock. The charge pump operates by using the external flying capacitors, C1 and C2, to transfer charge from the input to the output.

The two phases of the switching cycle will be referred to as the "charge phase" and the "hold/rest phase". During the charge phase, the flying capacitors are charged by the input supply. After charging the flying capacitors for half of a switching cycle [$t = 1/(2 \times F_{SW})$], the LM2770 switches to the hold/rest phase. In this configuration, the charge that was stored on the flying capacitors in the charge phase is transferred to the output. If the voltage on the output is below the target regulation voltage at completion of the switching cycle, the charge pump will switch back to the charge phase. But if the output voltage is above the target regulation voltage at the end of the switching cycle, the charge pump will remain in the hold/rest state. It will idle in this mode until the output voltage drops below the target regulation voltage. When this finally occurs, the LM2770 will switch back to the charge phase.

Input, output, and intermediary connections of the flying capacitors are made with internal MOS switches. The LM2770 utilizes two flying capacitors and a versatile switch network to achieve three distinct fractional voltage gains: ⅓, ½, and ⅔. With this gain-switching ability, it is as if the LM2770 is three-charge-pumps-in-one. The "active" charge pump at any given time is the one that yields the highest efficiency based on the input and output conditions present.

MULTI-GAIN EFFICIENCY PERFORMANCE

The ability to switch gains based on input and output conditions results in optimal efficiency throughout the operating ranges of the LM2770. Charge-pump efficiency is derived in the following two ideal equations (supply current and other losses are neglected for simplicity):

$$I_{IN} = G \times I_{OUT} \quad E = (V_{OUT} \times I_{OUT}) \div (V_{IN} \times I_{IN}) = V_{OUT} \div (G \times V_{IN}) \tag{1}$$

In the equations, G represents the charge pump gain. Efficiency is at its highest as $G \times V_{IN}$ approaches V_{OUT}. Refer to the efficiency graphs in the Typical Performance Characteristics section for detailed efficiency data. The gain regions are clearly distinguished by the sharp discontinuities in the efficiency curves and are identified at the bottom of each graph (G = ⅔, G = ½, and G = ⅓).

Copyright © 2004–2013, Texas Instruments Incorporated

DYNAMIC OUTPUT VOLTAGE SELECTION

The output voltage of the LM2770 can be dynamically adjusted for the purpose of improving system efficiency. Each LM2770 version contains two built-in output voltage options: a high level and a low level (1.5V and 1.2V, for example). With the simple V_{SEL} logic input pin, the output voltage can be switched between these two voltages.

Dynamic voltage selection can be used to improve overall system efficiency. When comparing system efficiency between two different output voltages, evaluating power consumption often lends more insight than actually comparing converter efficiencies. An application powered with a Li-Ion battery is a good example to illustrate this. Referring to the LM2770 efficiency curves (see Typical Performance Characteristics), all LM2770 output voltage options operate with G = ½ over the core Li-Ion battery voltage range (3.5V - 3.9V). Thus, the LM2770 circuit will draw an input current that is approximately half the output current in the core Li-Ion voltage range, regardless of the output voltage ($I_{IN} = G \times I_{OUT}$).

While varying the LM2770 output voltage does not directly improve system efficiency, it can have a secondary effect. Different output voltages often will result in different LM2770 load currents. This is where system efficiency can benefit from dynamic output voltage selection: the LM2770 load circuit can run at lower currents. This reduces LM2770 input current and improves overall system efficiency.

SLEEP MODE BYPASS LDO

The LM2770 offers a bypass low-dropout linear regulator (LDO) for low-noise performance under light loads. Capable of delivering up to 20mA of output current, this LDO has low ground pin current and is ideal for stand-by operation. The LDO is activated with the SLEEP logic input pin. When SLEEP is active, the charge pump is disabled and the LDO supplies all load current.

SHUTDOWN

The LM2770 is in shutdown mode when the voltage on the enable pin (EN) is logic-low. In shutdown, the LM2770 draws virtually no supply current. When in shutdown, the output of the LM2770 is completely disconnected from the input. The internal feedback resistors will pull the output voltage down to 0V (unless the output is driven by an outside source).

In some applications, it may be desired to disable the LM2770 and drive the output pin with another voltage source. This can be done, but the voltage on the output pin of the LM2770 must not be brought above the input voltage. The output pin will draw a small amount of current when driven externally due the internal feedback resistor divider connected between V_{OUT} and GND.

SOFT START

The LM2770 employs soft start circuitry to prevent excessive input inrush currents during startup. At startup, the output voltage gradually rises from 0V to the nominal output voltage. This occurs in 200µs (typ.). Soft-start is engaged when the part is enabled, including situations where voltage is established simultaneously on the V_{IN} and EN pins.

THERMAL SHUTDOWN

Protection from overheating-related damage is achieved with a thermal shutdown feature. When the junction temperature rises to 150ºC (typ.), the part switches into shutdown mode. The LM2770 disengages thermal shutdown when the junction temperature of the part is reduced to 140ºC (typ.). Due to the high efficiency of the LM2770, thermal shutdown and/or thermal cycling should not be encountered when the part is operated within specified input voltage, output current, and ambient temperature operating ratings. If thermal cycling is seen under these conditions, the most likely cause is an inadequate PCB layout that does not allow heat to be sufficiently dissipated out of the WSON package.

SHORT-CIRCUIT AND CURRENT LIMIT PROTECTION

The LM2770 charge pump contains circuitry that protects the device from destructive failure in the event of a direct short to ground on the output. This short-circuit protection circuit limits the output current to 400mA (typ.) when the output voltage is below 165mV (typ.). The sleep-mode LDO contains a 60mA (typ.) current limit circuit.

Copyright © 2004–2013, Texas Instruments Incorporated

RECOMMENDED CAPACITOR TYPES

The LM2770 requires 4 external capacitors for proper operation. Surface-mount multi-layer ceramic capacitors are recommended. These capacitors are small, inexpensive and have very low equivalent series resistance (ESR, ≤ 15mΩ typ.). Tantalum capacitors, OS-CON capacitors, and aluminum electrolytic capacitors generally are not recommended for use with the LM2770 due to their high ESR, as compared to ceramic capacitors.

For most applications, ceramic capacitors with an X7R or X5R temperature characteristic are preferred for use with the LM2770. These capacitors have tight capacitance tolerance (as good as ±10%) and hold their value over temperature (X7R: ±15% over -55ºC to 125ºC; X5R: ±15% over -55ºC to 85ºC).

Capacitors with a Y5V or Z5U temperature characteristic are generally not recommended for use with the LM2770. These types of capacitors typically have wide capacitance tolerance (+80%, -20%) and vary significantly over temperature (Y5V: +22%, -82% over -30ºC to +85ºC range; Z5U: +22%, -56% over +10ºC to +85ºC range). Under some conditions, a 1µF-rated Y5V or Z5U capacitor could have a capacitance as low as 0.1µF. Such detrimental deviation is likely to cause Y5V and Z5U capacitors to fail to meet the minimum capacitance requirements of the LM2770.

Net capacitance of a ceramic capacitor decreases with increased DC bias. This degradation can result in lower capacitance than expected on the input and/or output, resulting in higher ripple voltages and currents. Using capacitors at DC bias voltages significantly below the capacitor voltage rating will usually minimize DC bias effects. Consult capacitor manufacturers for information on capacitor DC bias characteristics.

Capacitance characteristics can vary quite dramatically with different application conditions, capacitor types, and capacitor manufacturers. It is strongly recommended that the LM2770 circuit be thoroughly evaluated early in the design-in process with the mass-production capacitors of choice. This will help to ensure that any such variability in capacitance does not negatively impact circuit performance.

The table below lists some leading ceramic capacitor manufacturers.

Manufacturer	Contact Information
AVX	www.avx.com
Murata	www.murata.com
Taiyo-Yuden	www.t-yuden.com
TDK	www.component.tdk.com
Vishay-Vitramon	www.vishay.com

OUTPUT CAPACITOR AND OUTPUT VOLTAGE RIPPLE

The output capacitor in the LM2770 circuit (C_{OUT}) directly impacts the magnitude of output voltage ripple. Other prominent factors also affecting output voltage ripple include input voltage, output current and flying capacitance. Due to the complexity of multi-gain and PFM switching, providing equations or models to approximate the magnitude of the ripple can not be easily accomplished. But one important generalization can be made: increasing (decreasing) the output capacitance will result in a proportional decrease (increase) in output voltage ripple. This can be observed in the output voltage ripple waveforms in the Typical Performance Characteristics section.

In typical high-current applications, a 10µF low-ESR ceramic output capacitor is recommended. Different output capacitance values can be used to reduce ripple, shrink the solution size, and/or cut the cost of the solution. But changing the output capacitor may also require changing the flying capacitors and/or input capacitor to maintain good overall circuit performance. Performance of the LM2770 with different capacitor setups in discussed in the section RECOMMENDED CAPACITOR CONFIGURATIONS.

High ESR in the output capacitor increases output voltage ripple. If a ceramic capacitor is used at the output, this is usually not a concern because the ESR of a ceramic capacitor is typically vey low and has only a minimal impact on ripple magnitudes. If a different capacitor type with higher ESR is used (tantalum, for example), the ESR could result in high ripple. To eliminate this effect, the net output ESR can be significantly reduced by placing a low-ESR ceramic capacitor in parallel with the primary output capacitor. The low ESR of the ceramic capacitor will be in parallel with the higher ESR, resulting in a low net ESR based on the principles of parallel resistance reduction.

 Copyright © 2004–2013, Texas Instruments Incorporated

Due to the PFM nature of the LM2770, output voltage ripple is highest at light loads. To eliminate this ripple, consider running the LM2770 in sleep mode when load currents are 20mA or less. Sleep mode disables the charge pump and enables the internal low-noise bypass linear regulator (LDO).

INPUT CAPACITOR AND INPUT VOLTAGE RIPPLE

The input capacitor (C_{IN}) is a reservoir of charge that aids a quick transfer of charge from the supply to the flying capacitors during the charge phase of operation. The input capacitor helps to keep the input voltage from drooping at the start of the charge phase when the flying capacitor is connected to the input. It also filters noise on the input pin, keeping this noise out of sensitive internal analog circuitry that is biased off the input line.

Much like the relationship between the output capacitance and output voltage ripple, input capacitance has a dominant and first-order effect on input ripple magnitude. Increasing (decreasing) the input capacitance will result in a proportional decrease (increase) in input voltage ripple. This can be observed in the input voltage ripple waveforms in the Typical Performance Characteristics section. Input voltage, output current, and flying capacitance also will affect input ripple levels to some degree.

In typical high-current applications, a 10µF low-ESR ceramic capacitor is recommended on the input. Different input capacitance values can be used to reduce ripple, shrink the solution size, and/or cut the cost of the solution. But changing the input capacitor may also require changing the flying capacitors and/or output capacitor to maintain good overall circuit performance. Performance of the LM2770 with different capacitor setups is discussed below in RECOMMENDED CAPACITOR CONFIGURATIONS.

FLYING CAPACITORS

The flying capacitors (C_1 and C_2) transfer charge from the input to the output. Flying capacitance can impact both output current capability and ripple magnitudes. If flying capacitance is too small, the LM2770 may not be able to regulate the output voltage when load currents are high. On the other hand, if the flying capacitance is too large, the flying capacitors might overwhelm the input and output capacitors, resulting in increased input and output ripple.

The flying capacitors should be identical. As a general guideline, the capacitance value of each flying capacitor should be 1/10th that of the output capacitor, up to a maximum of 1µF. This is a recommendation, not a requirement. Polarized capacitors (tantalum, aluminum electrolytic, etc.) must not be used for the flying capacitors, however, as they could become reverse-biased during LM2770 operation.

RECOMMENDED CAPACITOR CONFIGURATIONS

The data in Table 1 can be used to assist in the selection of a capacitor configuration that best balances solution size and cost with the electrical requirements of the application (ripple voltages, output current capability, etc.).

As previously discussed, input and output ripple voltages and frequencies will vary considerably with output current and input voltage. The numbers provided show expected ripple voltage when V_{IN} = 3.6V and load currents are between 100mA and 250mA. The table offers first look at approximate ripple levels and provides a comparison for the different capacitor configurations presented, but is not intended to ensure performance.

The columns that provide minimum input voltage recommendations illustrate the effect that smaller flying capacitors have on charge pump output current capability. Using smaller flying capacitors increases the output resistance of the charge pump. As a result, the minimunm input voltage of an application using small flying capacitance may need to be set slightly higher to prevent the output from falling out of regulation when loaded.

Copyright © 2004–2013, Texas Instruments Incorporated

Table 1. LM2770 Performance with Different Capacitor Configurations(1)

CAPACITOR CONFIGURATION	TYPICAL OUTPUT RIPPLE (V_{IN} = 3.6V)	TYPICAL INPUT RIPPLE (V_{IN} = 3.6V)	Recommended Minimum V_{IN} for Different Output Currents		
			I_{OUT} = 50mA	I_{OUT} = 150mA	I_{OUT} = 250mA
C_{IN} = C_{OUT} = 2×10µF, C1 = C2 = 1µF	25mV	35mV	3.0V	3.0V	3.1V
C_{IN} = C_{OUT} = 10µF, C1 = C2 = 1µF	50mV	70mV	3.0V	3.0V	3.1V
C_{IN} = C_{OUT} = 4.7µF, C1 = C2 = 0.47µF	130mV	150mV	3.0V	3.1V	3.2V
C_{IN} = C_{OUT} = 2.2µF, C1 = C2 = 0.22µF	200mV	260mV	3.0V	3.1V	3.2V

(1) Refer to the text in the Recommended Capacitor Configurations section for detailed information on the data in this table

Layout Guidelines

Proper board layout will help to ensure optimal performance of the LM2770 circuit. The following guidelines are recommended:

- Place capacitors as close to the LM2770 as possible, and preferably on the same side of the board as the IC.
- Use short, wide traces to connect the external capacitors to the LM2770 to minimize trace resistance and inductance.
- Use a low resistance connection between ground and the GND pin of the LM2770. Using wide traces and/or multiple vias to connect GND to a ground plane on the board is most advantageous.

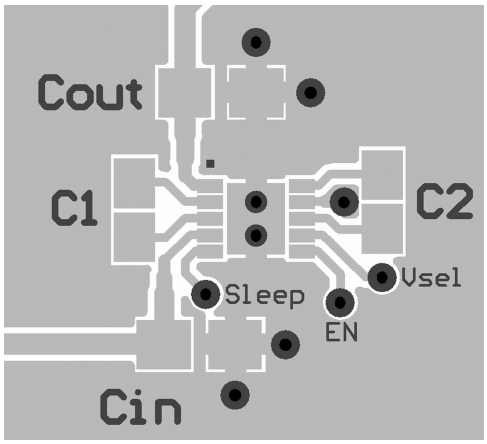

Unlabelled vias connect to an internal ground plane

Figure 19. Recommended Board Layout of a LM2770 Circuit

Copyright © 2004–2013, Texas Instruments Incorporated

REVISION HISTORY

Changes from Revision D (May 2013) to Revision E	Page
• Changed layout of National Data Sheet to TI format	14

PACKAGING INFORMATION

Orderable part number	Status (1)	Material type (2)	Package | Pins	Package qty | Carrier	RoHS (3)	Lead finish/ Ball material (4)	MSL rating/ Peak reflow (5)	Op temp (°C)	Part marking (6)
LM2770SD-1215/NOPB	Active	Production	WSON (DSC) | 10	1000 | SMALL T&R	Yes	SN	Level-1-260C-UNLIM	-30 to 105	L162B
LM2770SD-1215/NOPB.A	Active	Production	WSON (DSC) | 10	1000 | SMALL T&R	Yes	SN	Level-1-260C-UNLIM	-30 to 105	L162B

(1) **Status:** For more details on status, see our product life cycle.

(2) **Material type:** When designated, preproduction parts are prototypes/experimental devices, and are not yet approved or released for full production. Testing and final process, including without limitation quality assurance, reliability performance testing, and/or process qualification, may not yet be complete, and this item is subject to further changes or possible discontinuation. If available for ordering, purchases will be subject to an additional waiver at checkout, and are intended for early internal evaluation purposes only. These items are sold without warranties of any kind.

(3) **RoHS values:** Yes, No, RoHS Exempt. See the TI RoHS Statement for additional information and value definition.

(4) **Lead finish/Ball material:** Parts may have multiple material finish options. Finish options are separated by a vertical ruled line. Lead finish/Ball material values may wrap to two lines if the finish value exceeds the maximum column width.

(5) **MSL rating/Peak reflow:** The moisture sensitivity level ratings and peak solder (reflow) temperatures. In the event that a part has multiple moisture sensitivity ratings, only the lowest level per JEDEC standards is shown. Refer to the shipping label for the actual reflow temperature that will be used to mount the part to the printed circuit board.

(6) **Part marking:** There may be an additional marking, which relates to the logo, the lot trace code information, or the environmental category of the part.

Multiple part markings will be inside parentheses. Only one part marking contained in parentheses and separated by a "~" will appear on a part. If a line is indented then it is a continuation of the previous line and the two combined represent the entire part marking for that device.

Important Information and Disclaimer: The information provided on this page represents TI's knowledge and belief as of the date that it is provided. TI bases its knowledge and belief on information provided by third parties, and makes no representation or warranty as to the accuracy of such information. Efforts are underway to better integrate information from third parties. TI has taken and continues to take reasonable steps to provide representative and accurate information but may not have conducted destructive testing or chemical analysis on incoming materials and chemicals. TI and TI suppliers consider certain information to be proprietary, and thus CAS numbers and other limited information may not be available for release.

In no event shall TI's liability arising out of such information exceed the total purchase price of the TI part(s) at issue in this document sold by TI to Customer on an annual basis.

TAPE AND REEL INFORMATION

REEL DIMENSIONS

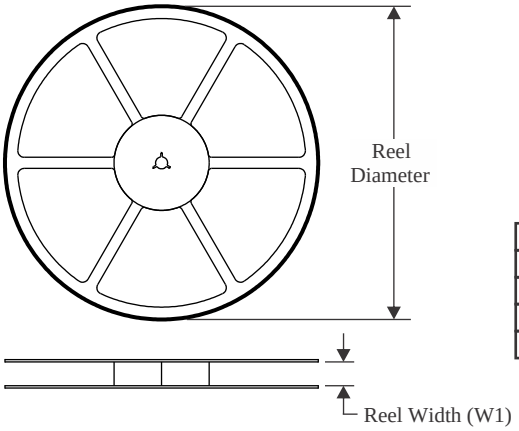

TAPE DIMENSIONS

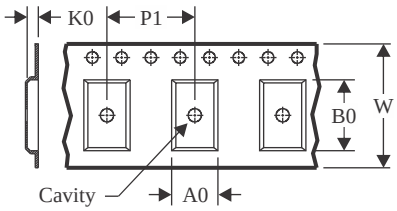

A0	Dimension designed to accommodate the component width
B0	Dimension designed to accommodate the component length
K0	Dimension designed to accommodate the component thickness
W	Overall width of the carrier tape
P1	Pitch between successive cavity centers

QUADRANT ASSIGNMENTS FOR PIN 1 ORIENTATION IN TAPE

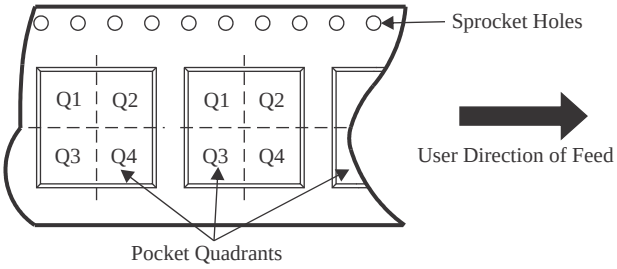

*All dimensions are nominal

Device	Package Type	Package Drawing	Pins	SPQ	Reel Diameter (mm)	Reel Width W1 (mm)	A0 (mm)	B0 (mm)	K0 (mm)	P1 (mm)	W (mm)	Pin1 Quadrant
LM2770SD-1215/NOPB	WSON	DSC	10	1000	178.0	12.4	3.3	3.3	1.0	8.0	12.0	Q1

TAPE AND REEL BOX DIMENSIONS

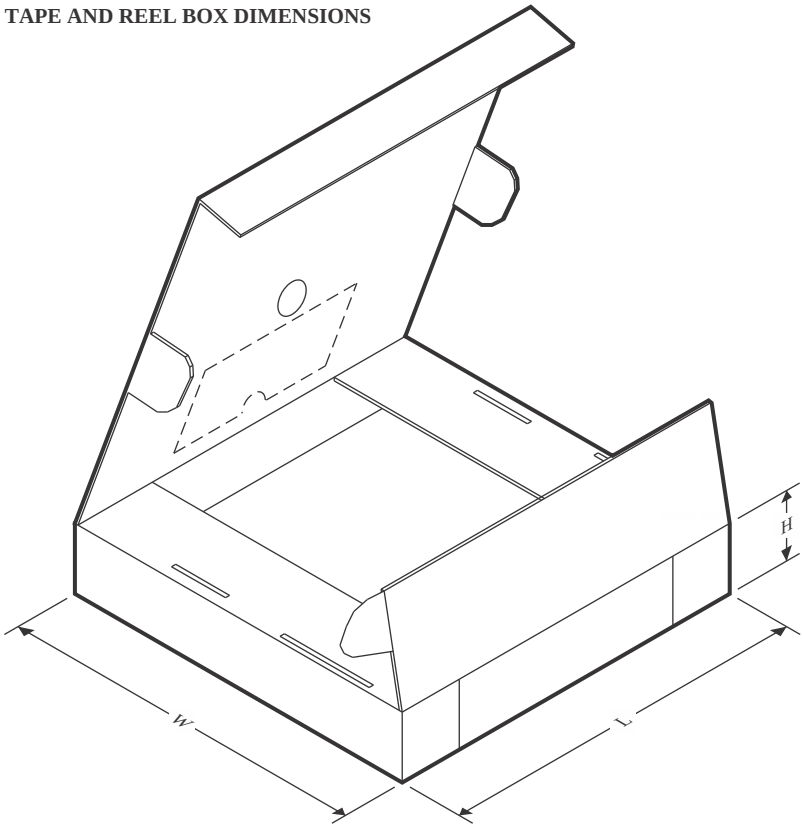

*All dimensions are nominal

Device	Package Type	Package Drawing	Pins	SPQ	Length (mm)	Width (mm)	Height (mm)
LM2770SD-1215/NOPB	WSON	DSC	10	1000	210.0	185.0	35.0

DSC0010A

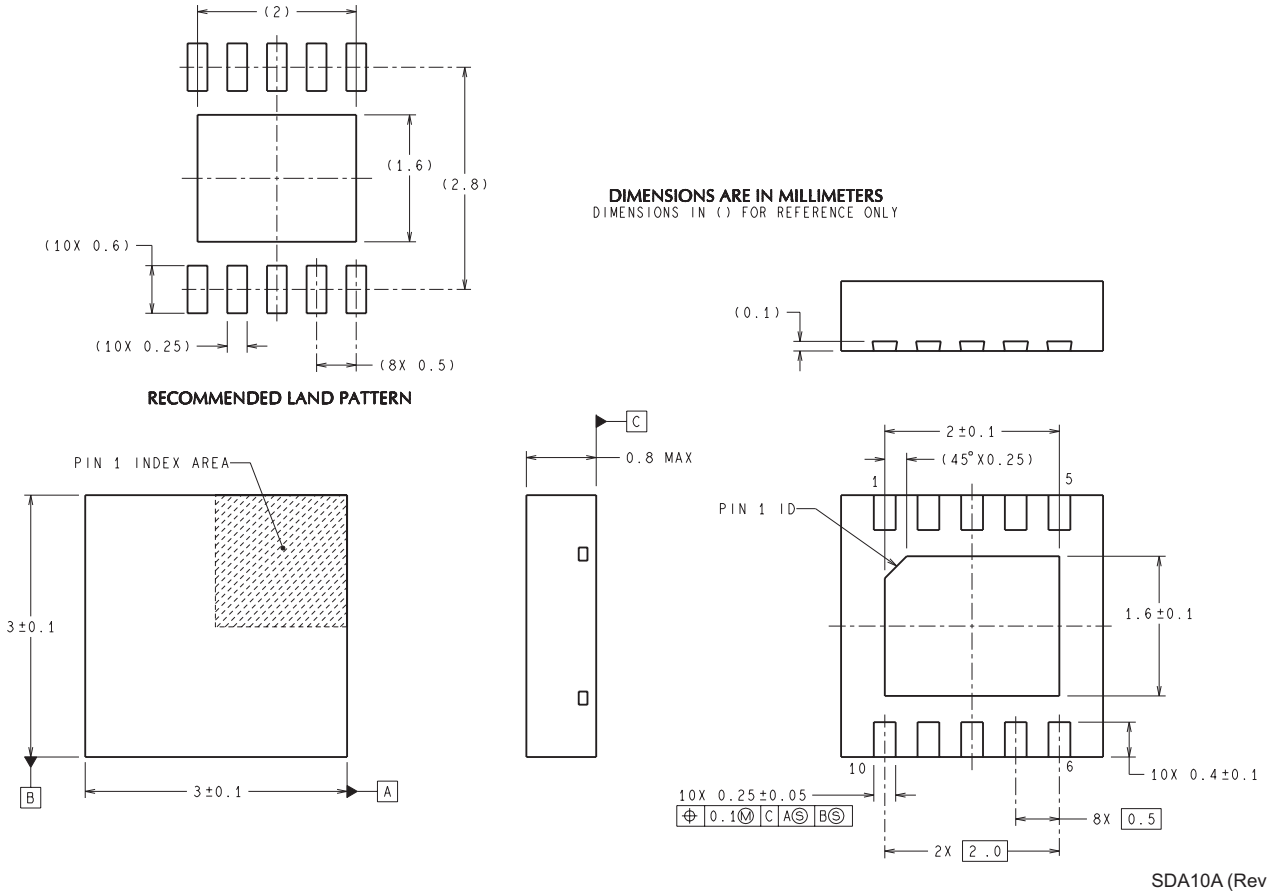
(2)
(1.6)
(2.8)
(10X 0.6)
(10X 0.25)
(8X 0.5)
RECOMMENDED LAND PATTERN
DIMENSIONS ARE IN MILLIMETERS
DIMENSIONS IN () FOR REFERENCE ONLY
(0.1)
C
0.8 MAX
PIN 1 INDEX AREA
3±0.1
B
3±0.1
A
2±0.1
(45°X0.25)
1
5
PIN 1 ID
1.6±0.1
10
6
10X 0.4±0.1
10X 0.25±0.05
0.1 M C A S B S
8X 0.5
2X 2.0
SDA10A (Rev A)

IMPORTANT NOTICE AND DISCLAIMER

TI PROVIDES TECHNICAL AND RELIABILITY DATA (INCLUDING DATA SHEETS), DESIGN RESOURCES (INCLUDING REFERENCE DESIGNS), APPLICATION OR OTHER DESIGN ADVICE, WEB TOOLS, SAFETY INFORMATION, AND OTHER RESOURCES “AS IS” AND WITH ALL FAULTS, AND DISCLAIMS ALL WARRANTIES, EXPRESS AND IMPLIED, INCLUDING WITHOUT LIMITATION ANY IMPLIED WARRANTIES OF MERCHANTABILITY, FITNESS FOR A PARTICULAR PURPOSE OR NON-INFRINGEMENT OF THIRD PARTY INTELLECTUAL PROPERTY RIGHTS.

These resources are intended for skilled developers designing with TI products. You are solely responsible for (1) selecting the appropriate TI products for your application, (2) designing, validating and testing your application, and (3) ensuring your application meets applicable standards, and any other safety, security, regulatory or other requirements.

These resources are subject to change without notice. TI grants you permission to use these resources only for development of an application that uses the TI products described in the resource. Other reproduction and display of these resources is prohibited. No license is granted to any other TI intellectual property right or to any third party intellectual property right. TI disclaims responsibility for, and you will fully indemnify TI and its representatives against, any claims, damages, costs, losses, and liabilities arising out of your use of these resources.

TI’s products are provided subject to TI’s Terms of Sale or other applicable terms available either on ti.com or provided in conjunction with such TI products. TI’s provision of these resources does not expand or otherwise alter TI’s applicable warranties or warranty disclaimers for TI products.

TI objects to and rejects any additional or different terms you may have proposed.

Mailing Address: Texas Instruments, Post Office Box 655303, Dallas, Texas 75265
Copyright © 2025, Texas Instruments Incorporated