- **Members of the Texas Instruments *Widebus*™ Family**
- ***EPIC*™ (Enhanced-Performance Implanted CMOS) Process**
- **Operating Range 2-V to 5.5-V V_{CC}**
- **Distributed V_{CC} and GND Pins Minimize High-Speed Switching Noise**
- **Flow-Through Architecture Optimizes PCB Layout**
- **Latch-Up Performance Exceeds 250 mA Per JESD 17**
- **Package Options Include Plastic Shrink Small-Outline (DL), Thin Shrink Small-Outline (DGG), and Thin Very Small-Outline (DGV) Packages and 380-mil Fine-Pitch Ceramic Flat (WD) Package Using 25-mil Center-to-Center Spacings**

SN54AHC16240 . . . WD PACKAGE
SN74AHC16240 . . . DGG, DGV, OR DL PACKAGE
(TOP VIEW)

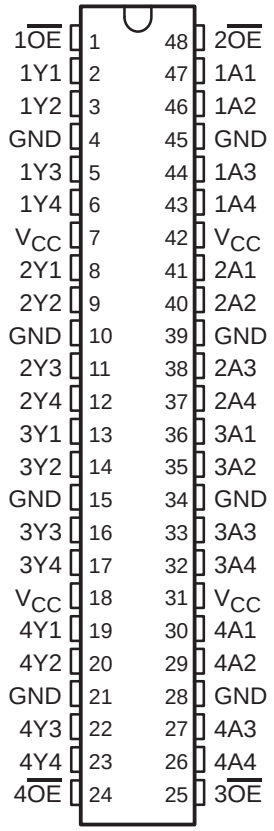

description

The ’AHC16240 devices are 16-bit buffers and line drivers designed specifically to improve the performance and density of 3-state memory address drivers, clock drivers, and bus-oriented receivers and transmitters.

These devices can be used as four 4-bit buffers, two 8-bit buffers, or one 16-bit buffer. They provide inverting outputs and symmetrical active-low output-enable ($\overline{OE}$) inputs.

To ensure the high-impedance state during power up or power down, $\overline{OE}$ should be tied to V_{CC} through a pullup resistor; the minimum value of the resistor is determined by the current-sinking capability of the driver.

The SN54AHC16240 is characterized for operation over the full military temperature range of –55°C to 125°C. The SN74AHC16240 is characterized for operation from –40°C to 85°C.

FUNCTION TABLE
(each 4-bit buffer/driver)

INPUTS		OUTPUT
$\overline{OE}$	A	Y
L	H	L
L	L	H
H	X	Z

Please be aware that an important notice concerning availability, standard warranty, and use in critical applications of Texas Instruments semiconductor products and disclaimers thereto appears at the end of this data sheet.

EPIC and Widebus are trademarks of Texas Instruments Incorporated.

UNLESS OTHERWISE NOTED this document contains PRODUCTION DATA information current as of publication date. Products conform to specifications per the terms of Texas Instruments standard warranty. Production processing does not necessarily include testing of all parameters.

Copyright © 2000, Texas Instruments Incorporated

logic symbol†

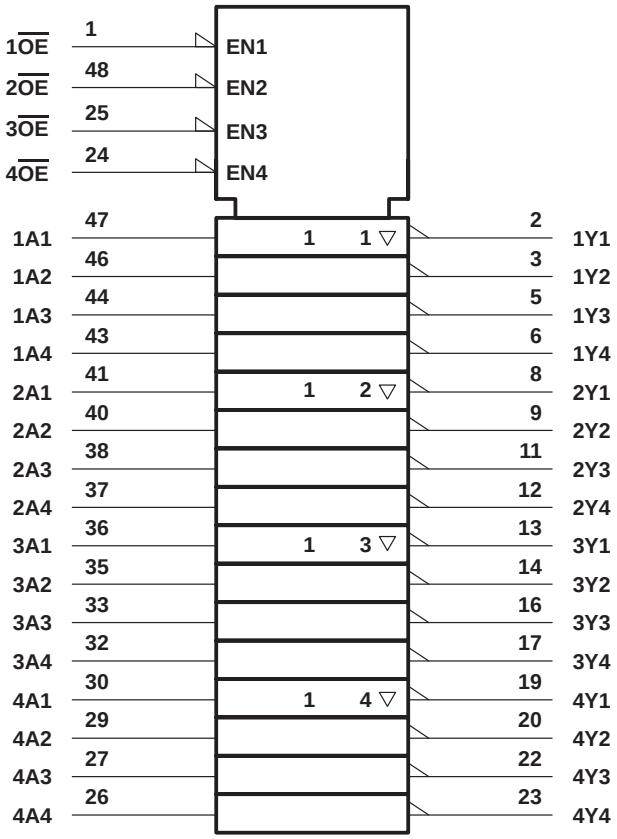

† This symbol is in accordance with ANSI/IEEE Std 91-1984 and IEC Publication 617-12.

logic diagram (positive logic)

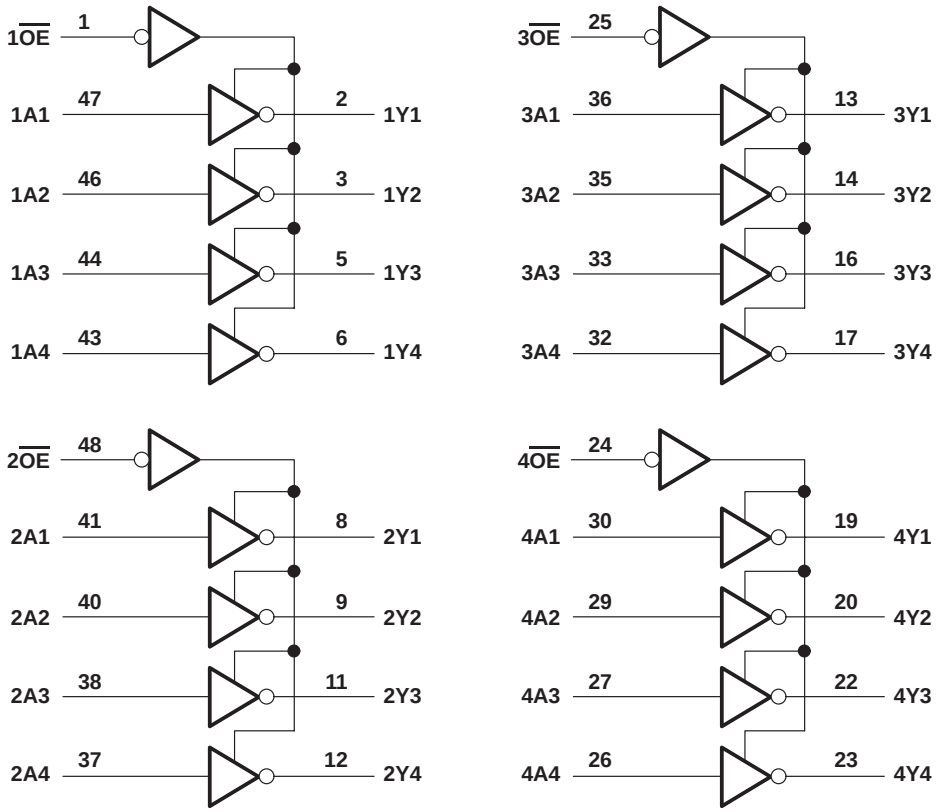

absolute maximum ratings over operating free-air temperature range (unless otherwise noted)†

Supply voltage range, V_{CC}	–0.5 V to 7 V
Input voltage range, V_I (see Note 1)	–0.5 V to 7 V
Output voltage range, V_O (see Note 1)	–0.5 V to V_{CC} + 0.5 V
Input clamp current, I_{IK} ($V_I < 0$)	–20 mA
Output clamp current, I_{OK} ($V_O < 0$ or $V_O > V_{CC}$)	±20 mA
Continuous output current, I_O ($V_O = 0$ to V_{CC})	±25 mA
Continuous current through each V_{CC} or GND	±75 mA
Package thermal impedance, θ_{JA} (see Note 2): DGG package	70°C/W
DGV package	58°C/W
DL package	63°C/W
Storage temperature range, T_{stg}	–65°C to 150°C

† Stresses beyond those listed under “absolute maximum ratings” may cause permanent damage to the device. These are stress ratings only, and functional operation of the device at these or any other conditions beyond those indicated under “recommended operating conditions” is not implied. Exposure to absolute-maximum-rated conditions for extended periods may affect device reliability.

NOTES: 1. The input and output voltage ratings may be exceeded if the input and output current ratings are observed.
2. The package thermal impedance is calculated in accordance with JESD 51.

recommended operating conditions (see Note 3)

			SN54AHC16240		SN74AHC16240		UNIT
			MIN	MAX	MIN	MAX	
V_{CC}	Supply voltage		2	5.5	2	5.5	V
V_{IH}	High-level input voltage	V_{CC} = 2 V	1.5		1.5		V
		V_{CC} = 3 V	2.1		2.1		
		V_{CC} = 5.5 V	3.85		3.85		
V_{IL}	Low-level input voltage	V_{CC} = 2 V		0.5		0.5	V
		V_{CC} = 3 V		0.9		0.9	
		V_{CC} = 5.5 V		1.65		1.65	
V_I	Input voltage		0	5.5	0	5.5	V
V_O	Output voltage		0	V_{CC}	0	V_{CC}	V
I_{OH}	High-level output current	V_{CC} = 2 V		–50		–50	μA
		V_{CC} = 3.3 ± 0.3 V		–4		–4	mA
		V_{CC} = 5 ± 0.5 V		–8		–8	
I_{OL}	Low-level output current	V_{CC} = 2 V		50		50	μA
		V_{CC} = 3.3 ± 0.3 V		4		4	mA
		V_{CC} = 5 ± 0.5 V		8		8	
Δt/Δv	Input transition rise or fall rate	V_{CC} = 3.3 ± 0.3 V		100		100	ns/V
		V_{CC} = 5 ± 0.5 V		20		20	
T_A	Operating free-air temperature		–55	125	–40	85	°C

NOTE 3: All unused inputs of the device must be held at V_{CC} or GND to ensure proper device operation. Refer to the TI application report, *Implications of Slow or Floating CMOS Inputs*, literature number SCBA004.

electrical characteristics over recommended operating free-air temperature range (unless otherwise noted)

PARAMETER	TEST CONDITIONS	V_{CC}	T_A = 25°C			SN54AHC16240		SN74AHC16240		UNIT
			MIN	TYP	MAX	MIN	MAX	MIN	MAX	
V_{OH}	I_{OH} = –50 μA	2 V	1.9	2		1.9		1.9		V
		3 V	2.9	3		2.9		2.9		
		4.5 V	4.4	4.5		4.4		4.4		
	I_{OH} = –4 mA	3 V	2.58			2.48		2.48		
	I_{OH} = –8 mA	4.5 V	3.94			3.8		3.8		
V_{OL}	I_{OL} = 50 μA	2 V			0.1		0.1		0.1	V
		3 V			0.1		0.1		0.1	
		4.5 V			0.1		0.1		0.1	
	I_{OL} = 4 mA	3 V			0.36		0.5		0.44	
	I_{OL} = 8 mA	4.5 V			0.36		0.5		0.44	
I_I	$V_I = V_{CC}$ or GND	0 V to 5.5 V			±0.1		±1*		±1	μA
I_{OZ}	$V_O = V_{CC}$ or GND, V_I ($\overline{OE}$) = V_{IL} or V_{IH}	5.5 V			±0.25		±2.5		±2.5	μA
I_{CC}	$V_I = V_{CC}$ or GND, I_O = 0	5.5 V			4		40		40	μA
C_i	$V_I = V_{CC}$ or GND	5 V		2.5	10				10	pF
C_o	$V_O = V_{CC}$ or GND	5 V		3.5						pF

* On products compliant to MIL-PRF-38535, this parameter is not production tested at V_{CC} = 0 V.

PRODUCT PREVIEW

PRODUCT PREVIEW information concerns products in the formative or design phase of development. Characteristic data and other specifications are design goals. Texas Instruments reserves the right to change or discontinue these products without notice.

switching characteristics over recommended operating free-air temperature range, V_{CC} = 3.3 V ± 0.3 V (unless otherwise noted) (see Figure 1)

PARAMETER	FROM (INPUT)	TO (OUTPUT)	LOAD CAPACITANCE	T_A = 25°C			SN54AHC16240		SN74AHC16240		UNIT
				MIN	TYP	MAX	MIN	MAX	MIN	MAX	
t_{PLH}	A	Y	C_L = 15 pF		5.3*	8.4*	1*	10*	1	10	ns
t_{PHL}					5.3*	8.4*	1*	10*	1	10	
t_{PZH}	$\overline{OE}$	Y	C_L = 15 pF		6.6*	10.6*	1*	12.5*	1	12.5	ns
t_{PZL}					6.6*	10.6*	1*	12.5*	1	12.5	
t_{PHZ}	$\overline{OE}$	Y	C_L = 15 pF		7.8*	11.5*	1*	12.5*	1	12.5	ns
t_{PLZ}					7.8*	11.5*	1*	12.5*	1	12.5	
t_{PLH}	A	Y	C_L = 50 pF		7.8	11.9*	1	13.5	1	13.5	ns
t_{PHL}					7.8	11.9	1	13.5	1	13.5	
t_{PZH}	$\overline{OE}$	Y	C_L = 50 pF		9.1	14.1	1	16	1	16	ns
t_{PZL}					9.1	14.1	1	16	1	16	
t_{PHZ}	$\overline{OE}$	Y	C_L = 50 pF		10.3	14	1	16	1	16	ns
t_{PLZ}					10.3	14	1	16	1	16	
$t_{sk(o)}$			C_L = 50 pF			1.5**				1.5	ns

* On products compliant to MIL-PRF-38535, this parameter is not production tested.
** On products compliant to MIL-PRF-38535, this parameter does not apply.

PRODUCT PREVIEW

switching characteristics over recommended operating free-air temperature range, V_{CC} = 5 V ± 0.5 V (unless otherwise noted) (see Figure 1)

PARAMETER	FROM (INPUT)	TO (OUTPUT)	LOAD CAPACITANCE	T_A = 25°C			SN54AHC16240		SN74AHC16240		UNIT
				MIN	TYP	MAX	MIN	MAX	MIN	MAX	
t_{PLH}	A	Y	C_L = 15 pF		3.6*	6*	1*	7*	1	6.5	ns
t_{PHL}					3.6*	6*	1*	7*	1	6.5	
t_{PZH}	$\overline{OE}$	Y	C_L = 15 pF		4.7*	7.3*	1*	8.5*	1	8.5	ns
t_{PZL}					4.7*	7.3*	1*	8.5*	1	8.5	
t_{PHZ}	$\overline{OE}$	Y	C_L = 15 pF		5.2*	7.2*	1*	8.5*	1	8.5	ns
t_{PLZ}					5.2*	7.2*	1*	8.5*	1	8.5	
t_{PLH}	A	Y	C_L = 50 pF		5.1	8	1	9	1	8.5	ns
t_{PHL}					5.1	8	1	9	1	8.5	
t_{PZH}	$\overline{OE}$	Y	C_L = 50 pF		6.2	9.3	1	10.5	1	10.5	ns
t_{PZL}					6.2	9.3	1	10.5	1	10.5	
t_{PHZ}	$\overline{OE}$	Y	C_L = 50 pF		6.7	9.2	1	10.5	1	10.5	ns
t_{PLZ}					6.7	9.2	1	10.5	1	10.5	
$t_{sk(o)}$			C_L = 50 pF			1**				1	ns

* On products compliant to MIL-PRF-38535, this parameter is not production tested.
** On products compliant to MIL-PRF-38535, this parameter does not apply.

PRODUCT PREVIEW

PRODUCT PREVIEW information concerns products in the formative or design phase of development. Characteristic data and other specifications are design goals. Texas Instruments reserves the right to change or discontinue these products without notice.

noise characteristics, V_{CC} = 5 V, C_L = 50 pF, T_A = 25°C (see Note 4)

PARAMETER		SN74AHC16240			UNIT
		MIN	TYP	MAX	
$V_{OL(P)}$	Quiet output, maximum dynamic V_{OL}		0.6		V
$V_{OL(V)}$	Quiet output, minimum dynamic V_{OL}		–0.6		V
$V_{OH(V)}$	Quiet output, minimum dynamic V_{OH}		4.6		V
$V_{IH(D)}$	High-level dynamic input voltage	3.5			V
$V_{IL(D)}$	Low-level dynamic input voltage			1.5	V

NOTE 4: Characteristics are for surface-mount packages only.

operating characteristics, V_{CC} = 5 V, T_A = 25°C

PARAMETER		TEST CONDITIONS		TYP	UNIT
C_{pd}	Power dissipation capacitance	No load,	f = 1 MHz	10	pF

PARAMETER MEASUREMENT INFORMATION

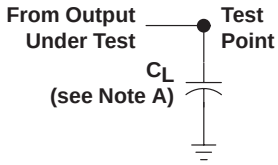

LOAD CIRCUIT FOR
TOTEM-POLE OUTPUTS

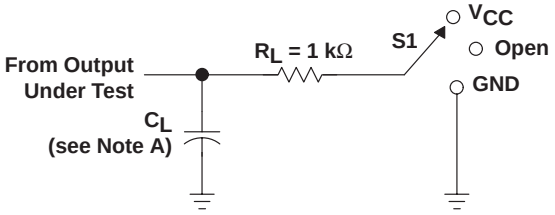

LOAD CIRCUIT FOR
3-STATE AND OPEN-DRAIN OUTPUTS

TEST	S1
t_{PLH}/t_{PHL}	Open
t_{PLZ}/t_{PZL}	V_{CC}
t_{PHZ}/t_{PZH}	GND
Open Drain	V_{CC}

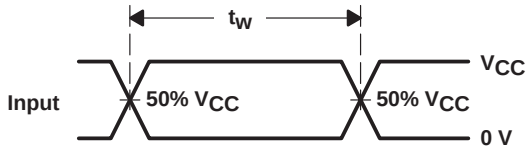

VOLTAGE WAVEFORMS
PULSE DURATION

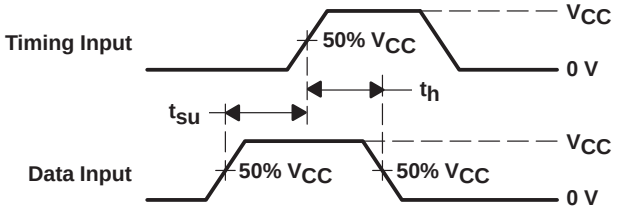

VOLTAGE WAVEFORMS
SETUP AND HOLD TIMES

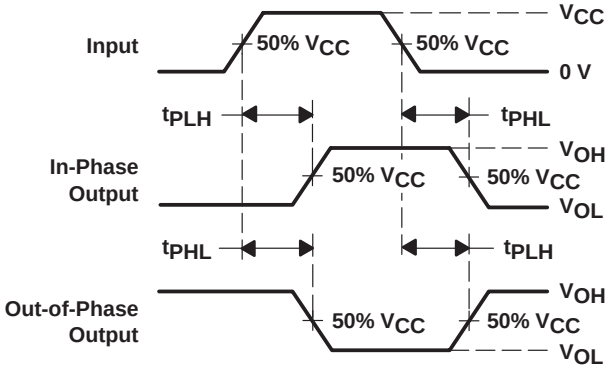

VOLTAGE WAVEFORMS
PROPAGATION DELAY TIMES
INVERTING AND NONINVERTING OUTPUTS

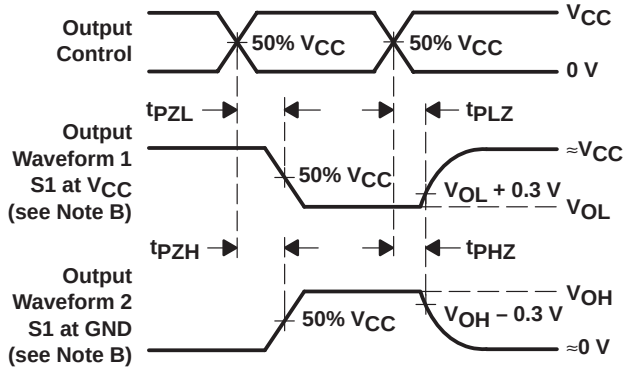

VOLTAGE WAVEFORMS
ENABLE AND DISABLE TIMES
LOW- AND HIGH-LEVEL ENABLING

NOTES: A. C_L includes probe and jig capacitance.
B. Waveform 1 is for an output with internal conditions such that the output is low except when disabled by the output control. Waveform 2 is for an output with internal conditions such that the output is high except when disabled by the output control.
C. All input pulses are supplied by generators having the following characteristics: PRR ≤ 1 MHz, Z_O = 50 Ω, t_r ≤ 3 ns, t_f ≤ 3 ns.
D. The outputs are measured one at a time with one input transition per measurement.

Figure 1. Load Circuit and Voltage Waveforms

PACKAGING INFORMATION

Orderable part number	Status (1)	Material type (2)	Package | Pins	Package qty | Carrier	RoHS (3)	Lead finish/ Ball material (4)	MSL rating/ Peak reflow (5)	Op temp (°C)	Part marking (6)
SN74AHC16240DGGR	Active	Production	TSSOP (DGG) | 48	2000 | LARGE T&R	Yes	NIPDAU	Level-1-260C-UNLIM	-40 to 85	AHC16240
SN74AHC16240DGGR.A	Active	Production	TSSOP (DGG) | 48	2000 | LARGE T&R	Yes	NIPDAU	Level-1-260C-UNLIM	-40 to 85	AHC16240
SN74AHC16240DGVR	Active	Production	TVSOP (DGV) | 48	2000 | LARGE T&R	Yes	NIPDAU	Level-1-260C-UNLIM	-40 to 85	HE240
SN74AHC16240DGVR.A	Active	Production	TVSOP (DGV) | 48	2000 | LARGE T&R	Yes	NIPDAU	Level-1-260C-UNLIM	-40 to 85	HE240
SN74AHC16240DL	Active	Production	SSOP (DL) | 48	25 | TUBE	Yes	NIPDAU	Level-1-260C-UNLIM	-40 to 85	AHC16240
SN74AHC16240DL.A	Active	Production	SSOP (DL) | 48	25 | TUBE	Yes	NIPDAU	Level-1-260C-UNLIM	-40 to 85	AHC16240

(1) **Status:** For more details on status, see our product life cycle.

(2) **Material type:** When designated, preproduction parts are prototypes/experimental devices, and are not yet approved or released for full production. Testing and final process, including without limitation quality assurance, reliability performance testing, and/or process qualification, may not yet be complete, and this item is subject to further changes or possible discontinuation. If available for ordering, purchases will be subject to an additional waiver at checkout, and are intended for early internal evaluation purposes only. These items are sold without warranties of any kind.

(3) **RoHS values:** Yes, No, RoHS Exempt. See the TI RoHS Statement for additional information and value definition.

(4) **Lead finish/Ball material:** Parts may have multiple material finish options. Finish options are separated by a vertical ruled line. Lead finish/Ball material values may wrap to two lines if the finish value exceeds the maximum column width.

(5) **MSL rating/Peak reflow:** The moisture sensitivity level ratings and peak solder (reflow) temperatures. In the event that a part has multiple moisture sensitivity ratings, only the lowest level per JEDEC standards is shown. Refer to the shipping label for the actual reflow temperature that will be used to mount the part to the printed circuit board.

(6) **Part marking:** There may be an additional marking, which relates to the logo, the lot trace code information, or the environmental category of the part.

Multiple part markings will be inside parentheses. Only one part marking contained in parentheses and separated by a "~" will appear on a part. If a line is indented then it is a continuation of the previous line and the two combined represent the entire part marking for that device.

Important Information and Disclaimer: The information provided on this page represents TI's knowledge and belief as of the date that it is provided. TI bases its knowledge and belief on information provided by third parties, and makes no representation or warranty as to the accuracy of such information. Efforts are underway to better integrate information from third parties. TI has taken and continues to take reasonable steps to provide representative and accurate information but may not have conducted destructive testing or chemical analysis on incoming materials and chemicals. TI and TI suppliers consider certain information to be proprietary, and thus CAS numbers and other limited information may not be available for release.

In no event shall TI's liability arising out of such information exceed the total purchase price of the TI part(s) at issue in this document sold by TI to Customer on an annual basis.

TAPE AND REEL INFORMATION

REEL DIMENSIONS

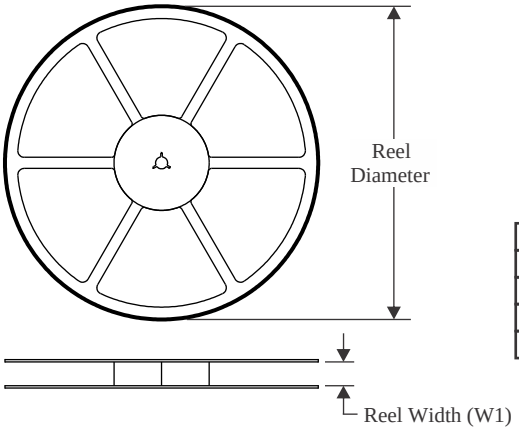

TAPE DIMENSIONS

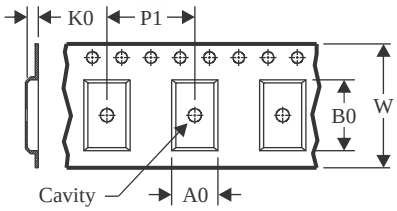

A0	Dimension designed to accommodate the component width
B0	Dimension designed to accommodate the component length
K0	Dimension designed to accommodate the component thickness
W	Overall width of the carrier tape
P1	Pitch between successive cavity centers

QUADRANT ASSIGNMENTS FOR PIN 1 ORIENTATION IN TAPE

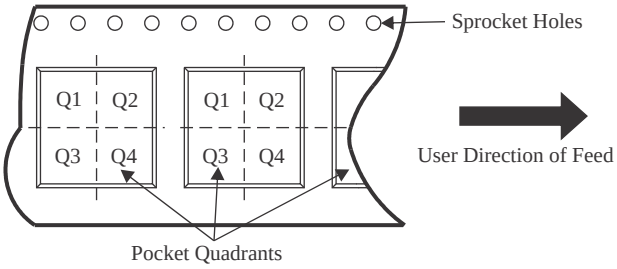

*All dimensions are nominal

Device	Package Type	Package Drawing	Pins	SPQ	Reel Diameter (mm)	Reel Width W1 (mm)	A0 (mm)	B0 (mm)	K0 (mm)	P1 (mm)	W (mm)	Pin1 Quadrant
SN74AHC16240DGGR	TSSOP	DGG	48	2000	330.0	24.4	8.6	13.0	1.8	12.0	24.0	Q1
SN74AHC16240DGVR	TVSOP	DGV	48	2000	330.0	16.4	7.1	10.2	1.6	12.0	16.0	Q1

TAPE AND REEL BOX DIMENSIONS

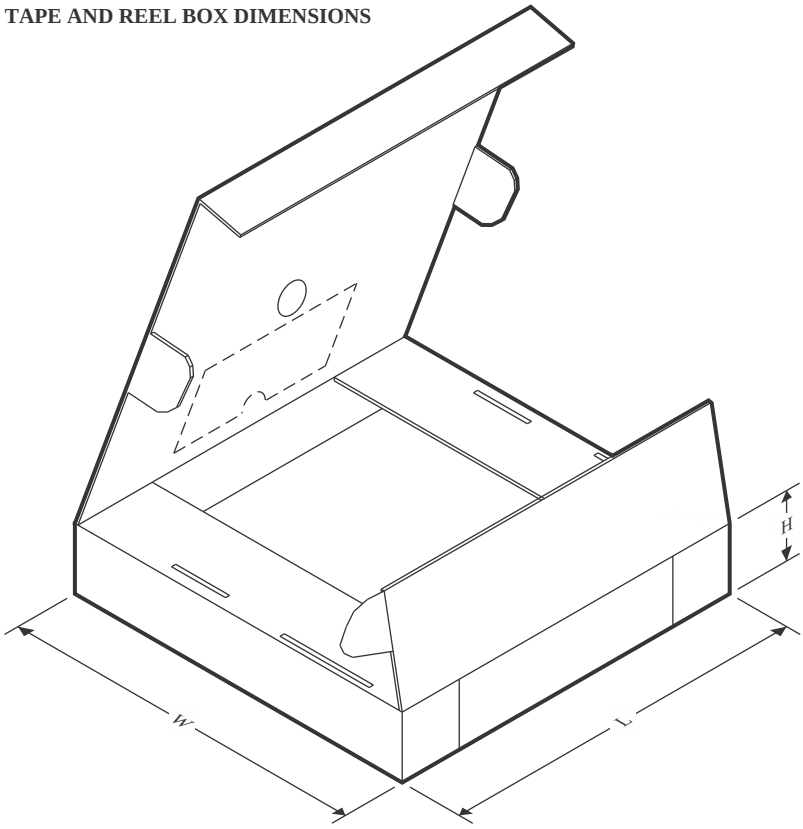

*All dimensions are nominal

Device	Package Type	Package Drawing	Pins	SPQ	Length (mm)	Width (mm)	Height (mm)
SN74AHC16240DGGR	TSSOP	DGG	48	2000	367.0	367.0	45.0
SN74AHC16240DGVR	TVSOP	DGV	48	2000	356.0	356.0	35.0

TUBE

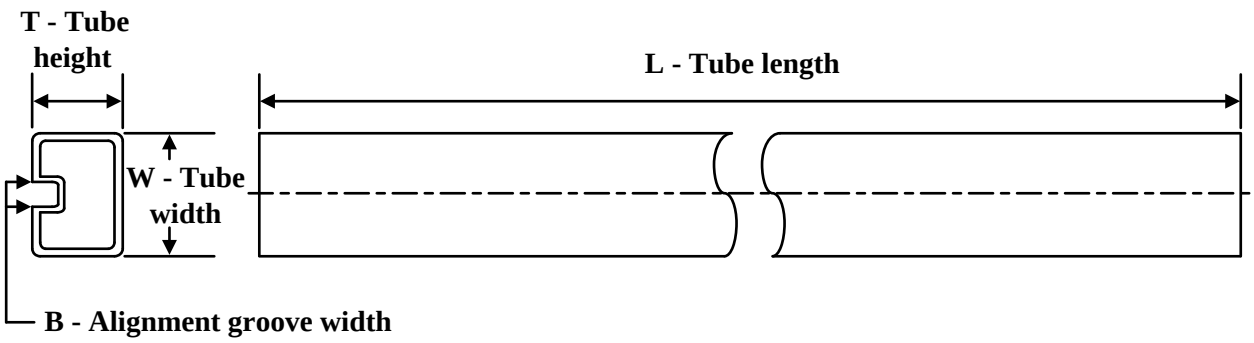

*All dimensions are nominal

Device	Package Name	Package Type	Pins	SPQ	L (mm)	W (mm)	T (µm)	B (mm)
SN74AHC16240DL	DL	SSOP	48	25	473.7	14.24	5110	7.87
SN74AHC16240DL.A	DL	SSOP	48	25	473.7	14.24	5110	7.87

DGV (R-PDSO-G)** **PLASTIC SMALL-OUTLINE**

24 PINS SHOWN

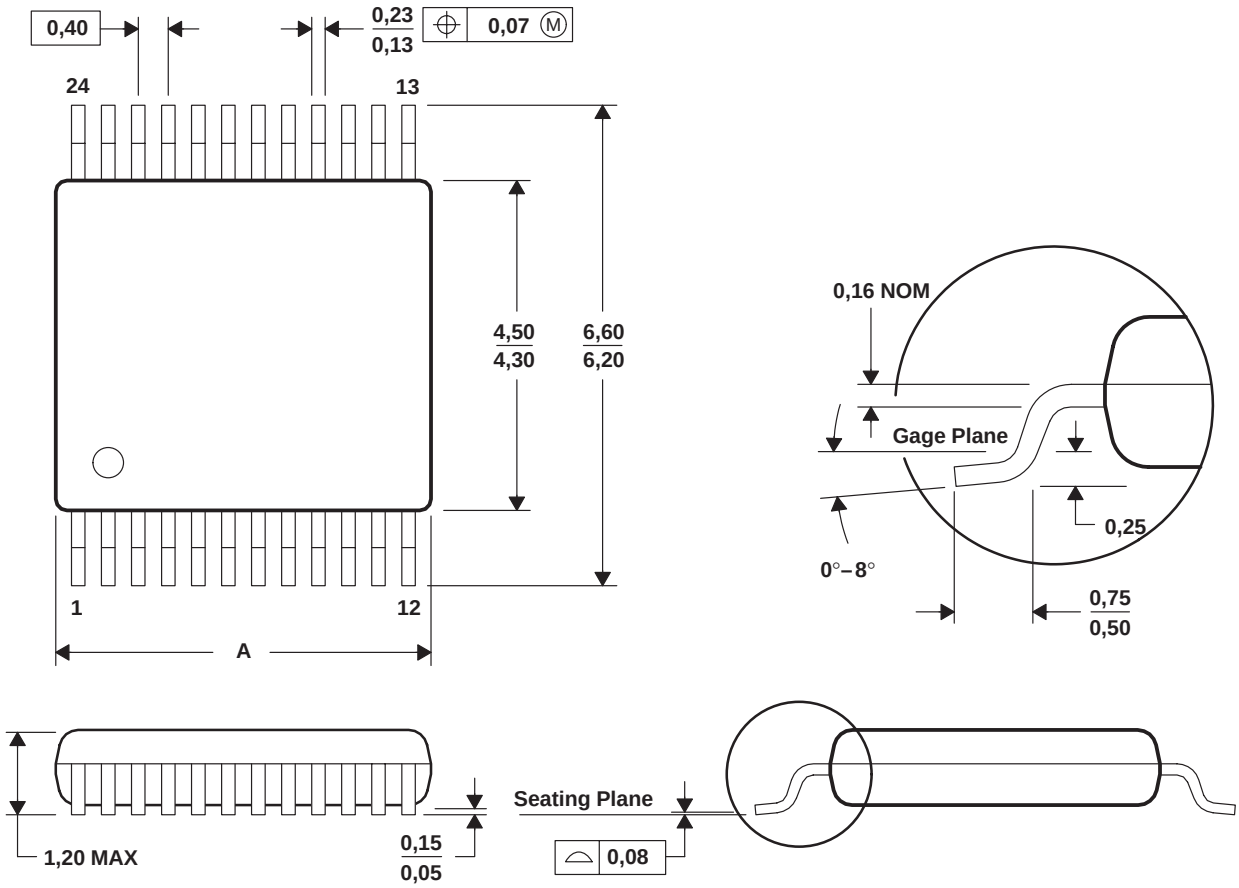

DIM \ PINS **	14	16	20	24	38	48	56
A MAX	3,70	3,70	5,10	5,10	7,90	9,80	11,40
A MIN	3,50	3,50	4,90	4,90	7,70	9,60	11,20

4073251/E 08/00

NOTES: A. All linear dimensions are in millimeters.
B. This drawing is subject to change without notice.
C. Body dimensions do not include mold flash or protrusion, not to exceed 0,15 per side.
D. Falls within JEDEC: 24/48 Pins – MO-153
14/16/20/56 Pins – MO-194

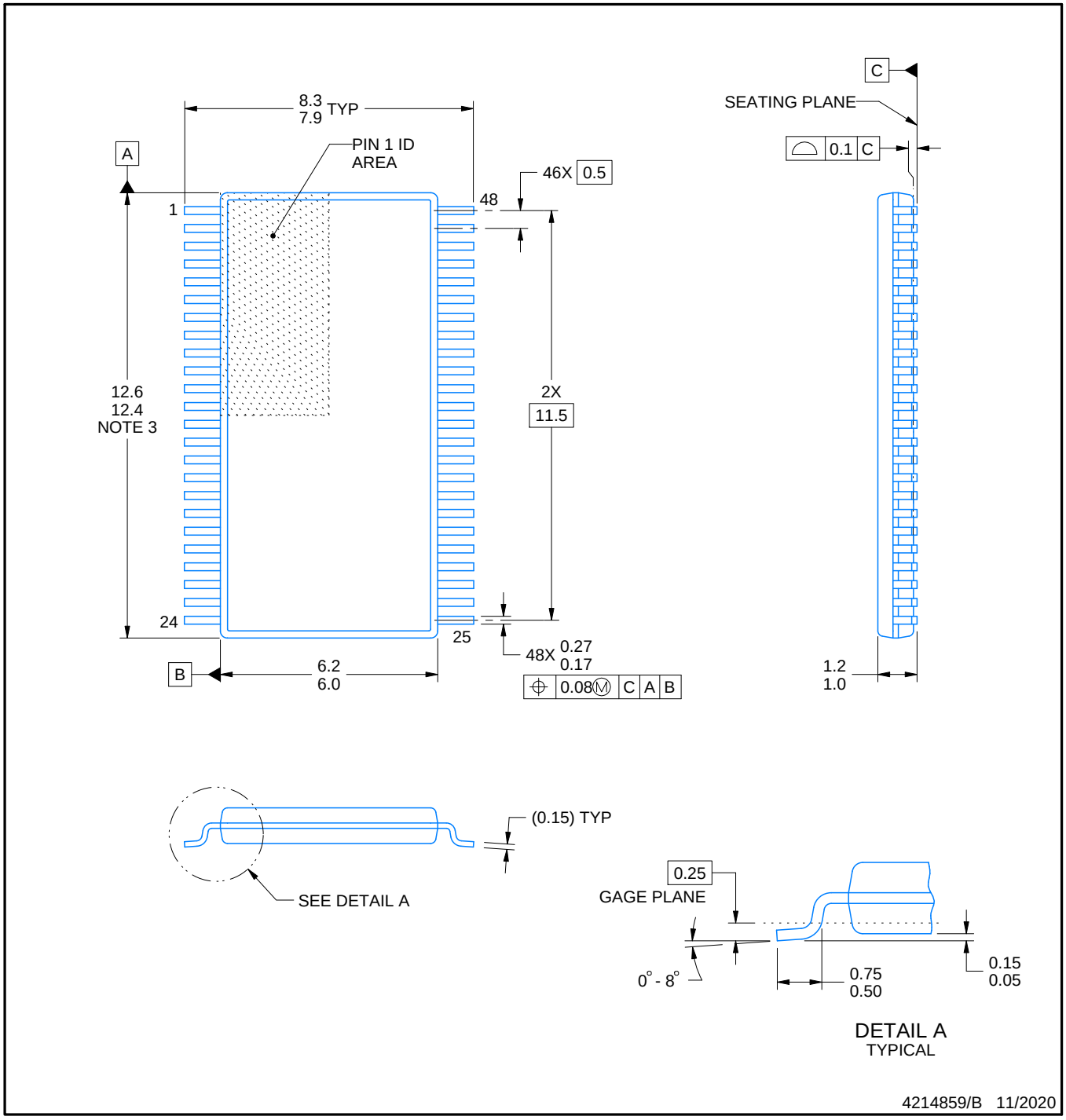

NOTES:

1. All linear dimensions are in millimeters. Any dimensions in parenthesis are for reference only. Dimensioning and tolerancing per ASME Y14.5M.
2. This drawing is subject to change without notice.
3. This dimension does not include mold flash, protrusions, or gate burrs. Mold flash, protrusions, or gate burrs shall not exceed 0.15 mm per side.
4. Reference JEDEC registration MO-153.

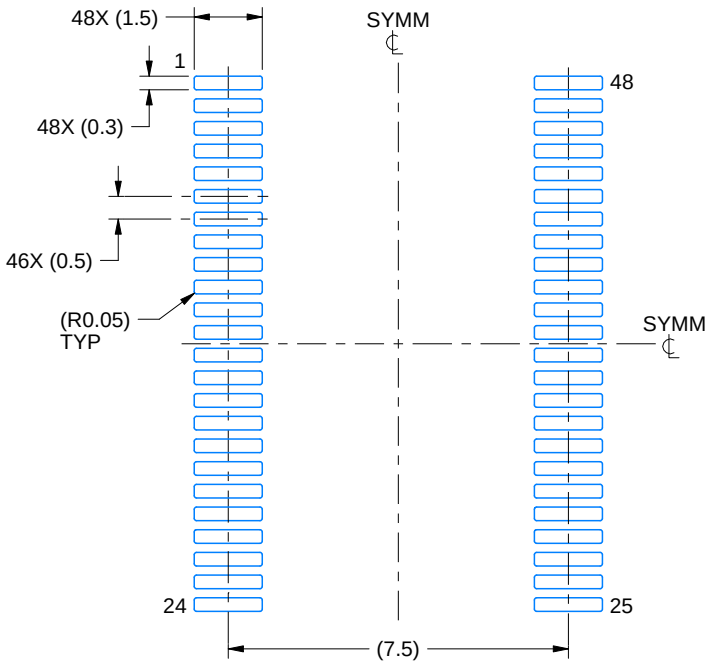

LAND PATTERN EXAMPLE
SCALE:6X

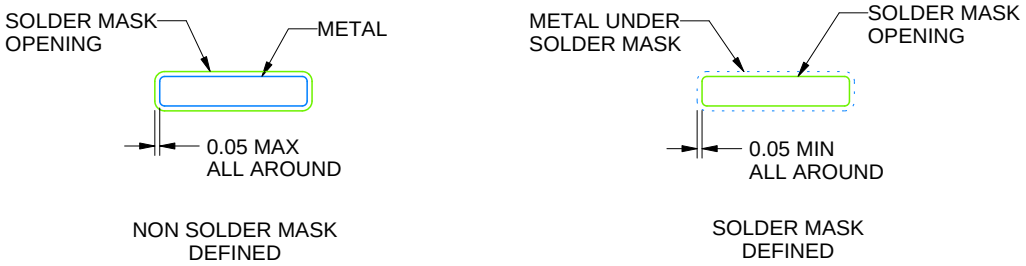

SOLDER MASK DETAILS

4214859/B 11/2020

NOTES: (continued)

5. Publication IPC-7351 may have alternate designs.
6. Solder mask tolerances between and around signal pads can vary based on board fabrication site.

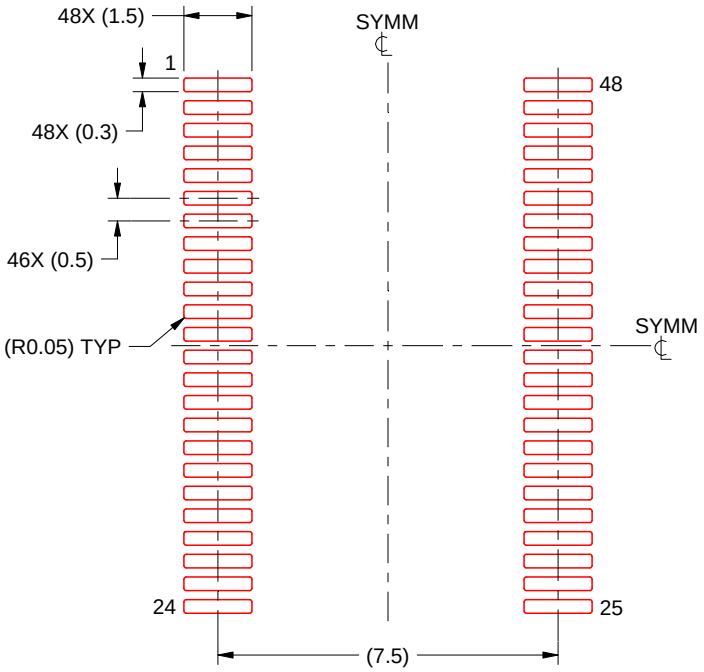

SOLDER PASTE EXAMPLE
BASED ON 0.125 mm THICK STENCIL
SCALE:6X

4214859/B 11/2020

NOTES: (continued)

7. Laser cutting apertures with trapezoidal walls and rounded corners may offer better paste release. IPC-7525 may have alternate design recommendations.
8. Board assembly site may have different recommendations for stencil design.

DGG (R-PDSO-G)** **PLASTIC SMALL-OUTLINE PACKAGE**

48 PINS SHOWN

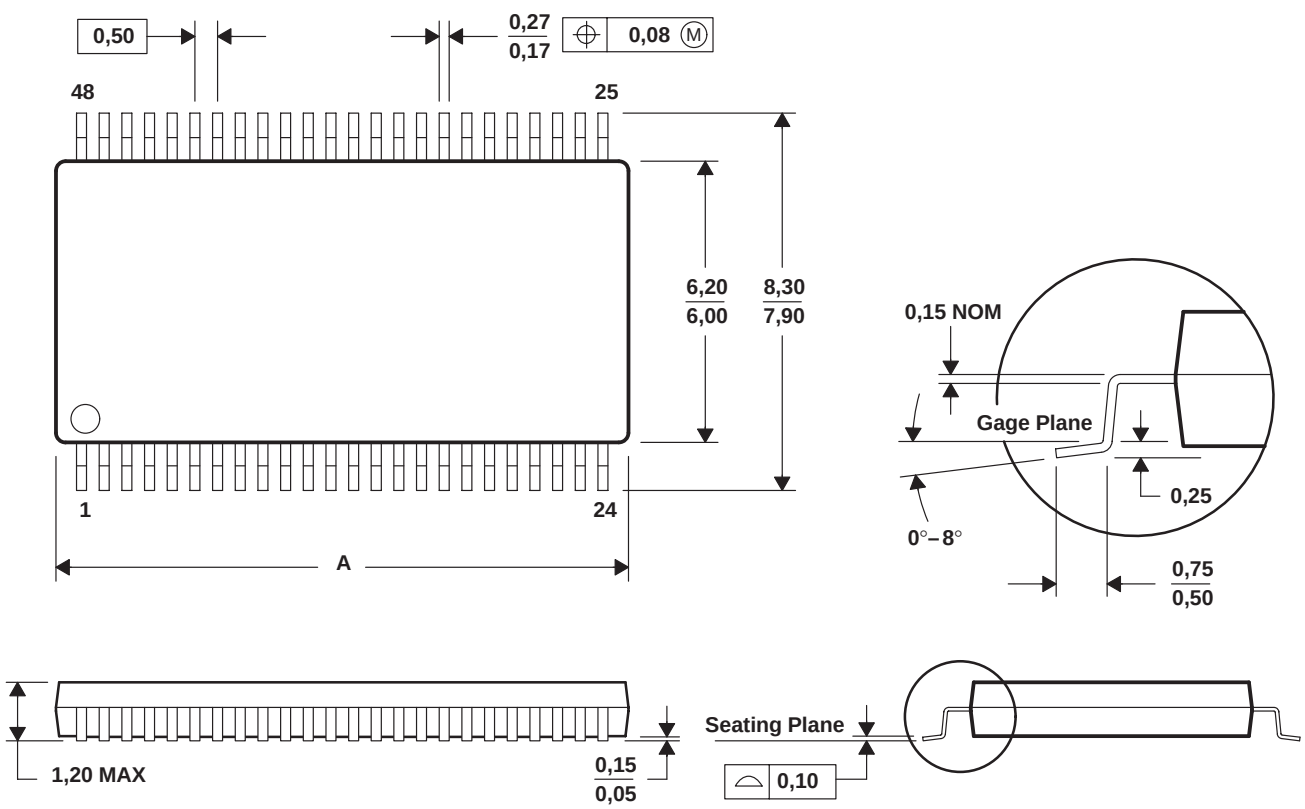

DIM \ PINS **	48	56	64
A MAX	12,60	14,10	17,10
A MIN	12,40	13,90	16,90

4040078/F 12/97

NOTES: A. All linear dimensions are in millimeters.
B. This drawing is subject to change without notice.
C. Body dimensions do not include mold protrusion not to exceed 0,15.
D. Falls within JEDEC MO-153

DL (R–PDSO–G48) PLASTIC SMALL–OUTLINE PACKAGE

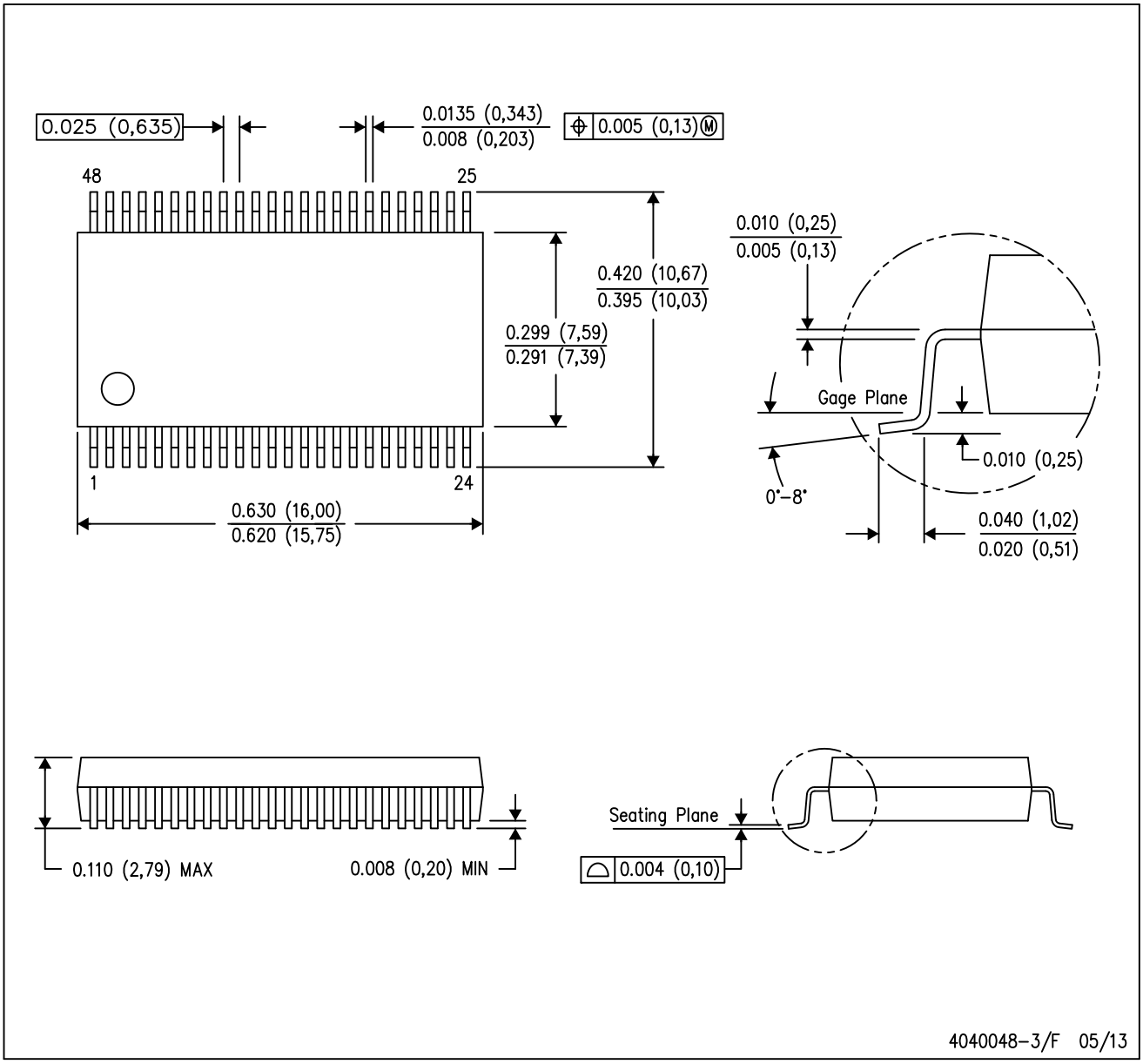

NOTES:
A. All linear dimensions are in inches (millimeters).
B. This drawing is subject to change without notice.
C. Body dimensions do not include mold flash or protrusion not to exceed 0.006 (0,15).
D. Falls within JEDEC MO–118

PowerPAD is a trademark of Texas Instruments.

IMPORTANT NOTICE AND DISCLAIMER

TI PROVIDES TECHNICAL AND RELIABILITY DATA (INCLUDING DATA SHEETS), DESIGN RESOURCES (INCLUDING REFERENCE DESIGNS), APPLICATION OR OTHER DESIGN ADVICE, WEB TOOLS, SAFETY INFORMATION, AND OTHER RESOURCES “AS IS” AND WITH ALL FAULTS, AND DISCLAIMS ALL WARRANTIES, EXPRESS AND IMPLIED, INCLUDING WITHOUT LIMITATION ANY IMPLIED WARRANTIES OF MERCHANTABILITY, FITNESS FOR A PARTICULAR PURPOSE OR NON-INFRINGEMENT OF THIRD PARTY INTELLECTUAL PROPERTY RIGHTS.

These resources are intended for skilled developers designing with TI products. You are solely responsible for (1) selecting the appropriate TI products for your application, (2) designing, validating and testing your application, and (3) ensuring your application meets applicable standards, and any other safety, security, regulatory or other requirements.

These resources are subject to change without notice. TI grants you permission to use these resources only for development of an application that uses the TI products described in the resource. Other reproduction and display of these resources is prohibited. No license is granted to any other TI intellectual property right or to any third party intellectual property right. TI disclaims responsibility for, and you will fully indemnify TI and its representatives against, any claims, damages, costs, losses, and liabilities arising out of your use of these resources.

TI’s products are provided subject to TI’s Terms of Sale or other applicable terms available either on ti.com or provided in conjunction with such TI products. TI’s provision of these resources does not expand or otherwise alter TI’s applicable warranties or warranty disclaimers for TI products.

TI objects to and rejects any additional or different terms you may have proposed.

Mailing Address: Texas Instruments, Post Office Box 655303, Dallas, Texas 75265
Copyright © 2025, Texas Instruments Incorporated