ADS867x 14-Bit, 500-kSPS, 4- and 8-Channel, Single-Supply, SAR ADCs with Bipolar Input Ranges

1 Features

- 14-Bit ADCs with Integrated Analog Front-End
- 4-, 8-Channel MUX with Auto and Manual Scan
- Channel-Independent Programmable Inputs:
  - ±10.24 V, ±5.12 V, ±2.56 V, ±1.28 V, ±0.64 V
  - 10.24 V, 5.12 V, 2.56 V, 1.28 V
- 5-V Analog Supply: 1.65-V to 5-V I/O Supply
- Constant Resistive Input Impedance: 1 MΩ
- Input Overvoltage Protection: Up to ±20 V
- On-Chip, 4.096-V Reference with Low Drift
- Excellent Performance:
  - 500-kSPS Aggregate Throughput
  - DNL: ±0.2 LSB; INL: ±0.25 LSB
  - Low Drift for Gain Error and Offset
  - SNR: 85 dB; THD: –100 dB
  - Low Power: 65 mW
- AUX Input → Direct Connection to ADC Inputs
- ALARM → High and Low Thresholds per Channel
- SPI™-Compatible Interface with Daisy-Chain
- Industrial Temperature Range: –40°C to 125°C
- TSSOP-38 Package (9.7 mm × 4.4 mm)

Block Diagram

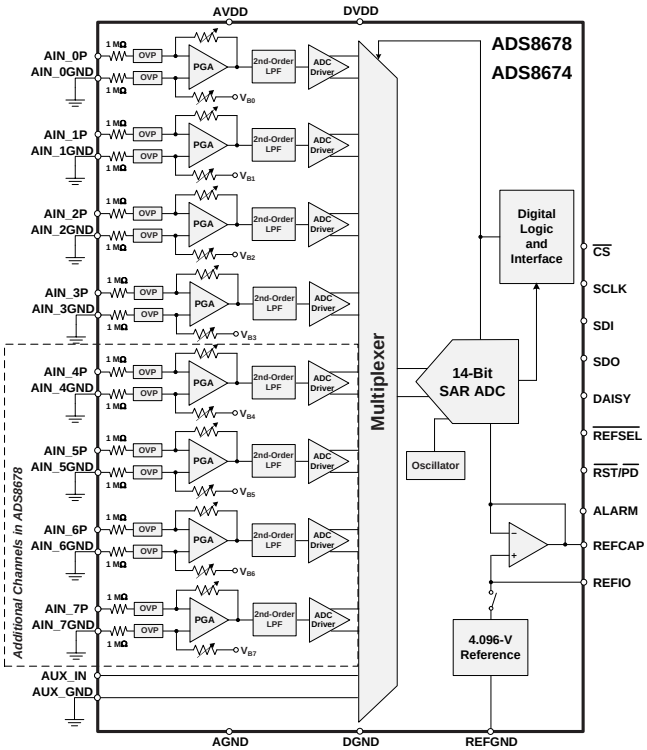

2 Applications

- Power Automation
- Protection Relays
- PLC Analog Input Modules

3 Description

The ADS8674 and ADS8678 are 4- and 8-channel, integrated data acquisition systems based on a 14-bit successive approximation (SAR) analog-to-digital converter (ADC), operating at a throughput of 500 kSPS. The devices feature integrated analog front-end circuitry for each input channel with overvoltage protection up to ±20 V, a 4- or 8-channel multiplexer with automatic and manual scanning modes, and an on-chip, 4.096-V reference with low temperature drift. Operating on a single 5-V analog supply, each input channel on the devices can support true bipolar input ranges of ±10.24 V, ±5.12 V, ±2.56 V, ±1.28V and ±0.64V, as well as unipolar input ranges of 0 V to 10.24 V, 0 V to 5.12 V, 0 V to 2.56 V and 0 V to 1.28 V. The gain of the analog front-end for all input ranges is accurately trimmed to ensure a high dc precision. The input range selection is software-programmable and independent for each channel. The devices offer a 1-MΩ constant resistive input impedance irrespective of the selected input range.

The ADS8674 and ADS8678 offer a simple SPI-compatible serial interface to the digital host and also support daisy-chaining of multiple devices. The digital supply operates from 1.65 V to 5.25 V, enabling direct interface to a wide range of host controllers.

Device Information(1)

PART NUMBER	PACKAGE	BODY SIZE (NOM)
ADS867x	TSSOP (38)	9.70 mm × 4.40 mm

(1) For all available packages, see the orderable addendum at the end of the datasheet.

Gain Error versus Temperature

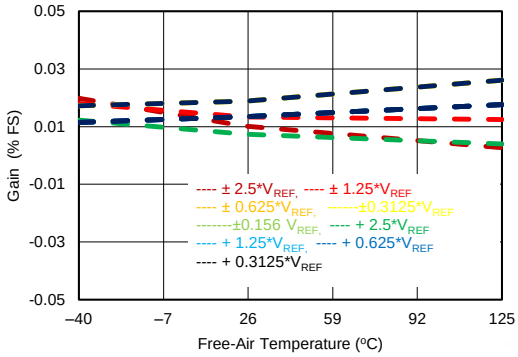

An IMPORTANT NOTICE at the end of this data sheet addresses availability, warranty, changes, use in safety-critical applications, intellectual property matters and other important disclaimers. PRODUCTION DATA.

Table of Contents

1 Features ... 1
2 Applications ... 1
3 Description ... 1
4 Revision History ... 2
5 Device Comparison Table ... 3
6 Pin Configuration and Functions ... 3
7 Specifications ... 5
7.1 Absolute Maximum Ratings ... 5
7.2 ESD Ratings ... 5
7.3 Recommended Operating Conditions ... 5
7.4 Thermal Information ... 5
7.5 Electrical Characteristics ... 6
7.6 Timing Requirements: Serial Interface ... 10
7.7 Typical Characteristics ... 11
8 Detailed Description ... 22
8.1 Overview ... 22
8.2 Functional Block Diagram ... 22
8.3 Feature Description ... 23
8.4 Device Functional Modes ... 36
8.5 Register Maps ... 49
9 Application and Implementation ... 65
9.1 Application Information ... 65
9.2 Typical Applications ... 65
10 Power-Supply Recommendations ... 68
11 Layout ... 69
11.1 Layout Guidelines ... 69
11.2 Layout Example ... 70
12 Device and Documentation Support ... 71
12.1 Documentation Support ... 71
12.2 Related Links ... 71
12.3 Community Resources ... 71
12.4 Trademarks ... 71
12.5 Electrostatic Discharge Caution ... 71
12.6 Glossary ... 71
13 Mechanical, Packaging, and Orderable Information ... 72

4 Revision History

DATE	REVISION	NOTES
July 2014	*	Initial release.

Copyright © 2015, Texas Instruments Incorporated

5 Device Comparison Table

PRODUCT	RESOLUTION (Bits)	CHANNELS	SAMPLE RATE (kSPS)
ADS8674	14	4, single-ended	500
ADS8678	14	8, single-ended	500

6 Pin Configuration and Functions

DBT Package
38-Pin TSSOP
Top View (Not to Scale)

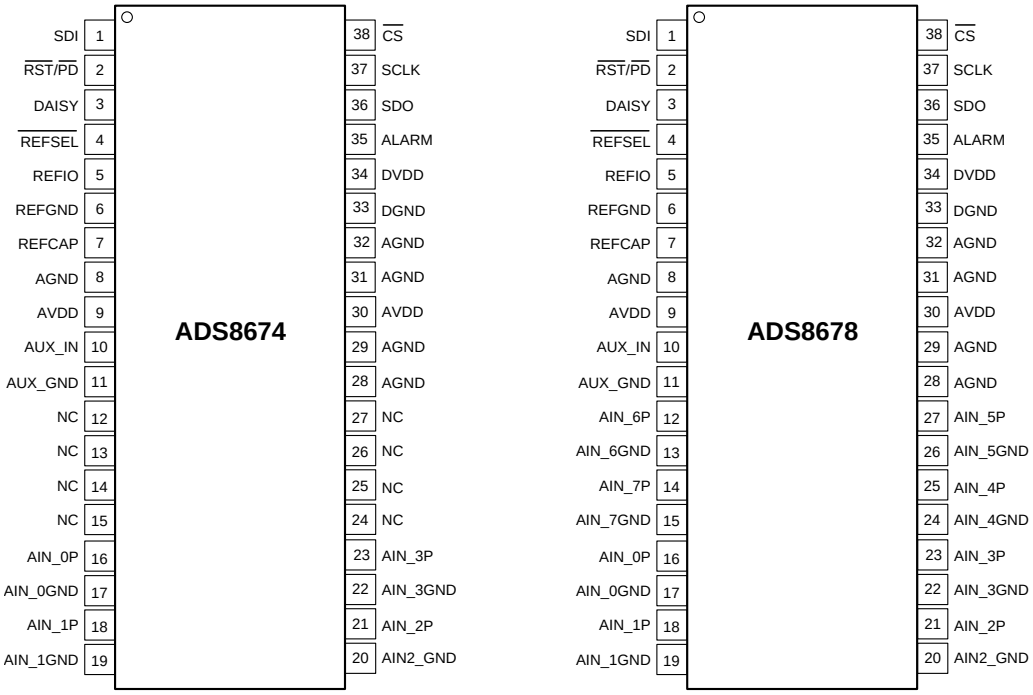

Pin Functions

PIN			I/O	DESCRIPTION
NO.	NAME			
	ADS8674	ADS8678		
1	SDI		Digital input	Data input for serial communication.
2	$\overline{RST}/\overline{PD}$		Digital input	Active low logic input. Dual functionality to reset or power-down the device.
3	DAISY		Digital input	Chain the data input during serial communication in daisy-chain mode.
4	$\overline{REFSEL}$		Digital input	Active low logic input to enable the internal reference. When low, the internal reference is enabled; REFIO becomes an output that includes the V_{REF} voltage. When high, the internal reference is disabled; REFIO becomes an input to apply the external V_{REF} voltage.
5	REFIO		Analog input, output	Internal reference output and external reference input pin. Decouple with REFGND on pin 6.
6	REFGND		Power supply	Reference GND pin; short to the analog GND plane. Decouple with REFIO on pin 5 and REFCAP on pin 7.
7	REFCAP		Analog output	ADC reference decoupling capacitor pin. Decouple with REFGND on pin 6.
8	AGND		Power supply	Analog ground pin. Decouple with AVDD on pin 9.
9	AVDD		Power supply	Analog supply pin. Decouple with AGND on pin 8.
10	AUX_IN		Analog input	Auxiliary input channel: positive input. Decouple with AUX_GND on pin 11.
11	AUX_GND		Analog input	Auxiliary input channel: negative input. Decouple with AUX_IN on pin 10.

Copyright © 2015, Texas Instruments Incorporated

Pin Functions (continued)

PIN			I/O	DESCRIPTION
NO.	NAME			
	ADS8674	ADS8678		
12	NC	AIN_6P	Analog input	Analog input channel 6, positive input. Decouple with AIN_6GND on pin 13. No connection for the ADS8674; this pin can be left floating or connected to AGND.
13	NC	AIN_6GND	Analog input	Analog input channel 6, negative input. Decouple with AIN_6P on pin 12. No connection for the ADS8674; this pin can be left floating or connected to AGND.
14	NC	AIN_7P	Analog input	Analog input channel 7, positive input. Decouple with AIN_7GND on pin 15. No connection for the ADS8674; this pin can be left floating or connected to AGND.
15	NC	AIN_7GND	Analog input	Analog input channel 7, negative input. Decouple with AIN_7P on pin 14. No connection for the ADS8674; this pin can be left floating or connected to AGND.
16	AIN_0P		Analog input	Analog input channel 0, positive input. Decouple with AIN_0GND on pin 17.
17	AIN_0GND		Analog input	Analog input channel 0, negative input. Decouple with AIN_0P on pin 16.
18	AIN_1P		Analog input	Analog input channel 1, positive input. Decouple with AIN_1GND on pin 19.
19	AIN_1GND		Analog input	Analog input channel 1, negative input. Decouple with AIN_1P on pin 18.
20	AIN2_GND		Analog input	Analog input channel 2, negative input. Decouple with AIN_2P on pin 21.
21	AIN_2P		Analog input	Analog input channel 2, positive input. Decouple with AIN_2GND on pin 20.
22	AIN_3GND		Analog input	Analog input channel 3, negative input. Decouple with AIN_3P on pin 23.
23	AIN_3P		Analog input	Analog input channel 3, positive input. Decouple with AIN_3GND on pin 22.
24	NC	AIN_4GND	Analog input	Analog input channel 4, negative input. Decouple with AIN_4P on pin 25. No connection for the ADS8674; this pin can be left floating or connected to AGND.
25	NC	AIN_4P	Analog input	Analog input channel 4, positive input. Decouple with AIN_4GND on pin 24. No connection for the ADS8674; this pin can be left floating or connected to AGND.
26	NC	AIN_5GND	Analog input	Analog input channel 5, negative input. Decouple with AIN_5P on pin 27. No connection for the ADS8674; this pin can be left floating or connected to AGND.
27	NC	AIN_5P	Analog input	Analog input channel 5, positive input. Decouple with AIN_5GND on pin 26. No connection for the ADS8674; this pin can be left floating or connected to AGND.
28	AGND		Power supply	Analog ground pin
29	AGND		Power supply	Analog ground pin
30	AVDD		Power supply	Analog supply pin. Decouple with AGND on pin 31.
31	AGND		Power supply	Analog ground pin. Decouple with AVDD on pin 30.
32	AGND		Power supply	Analog ground pin
33	DGND		Power supply	Digital ground pin. Decouple with DVDD on pin 34.
34	DVDD		Power supply	Digital supply pin. Decouple with DGND on pin 33.
35	ALARM		Digital output	Active high alarm output
36	SDO		Digital output	Data output for serial communication
37	SCLK		Digital input	Clock input for serial communication
38	$\overline{CS}$		Digital input	Active low logic input; chip-select signal

Copyright © 2015, Texas Instruments Incorporated

7 Specifications

7.1 Absolute Maximum Ratings

over operating free-air temperature range (unless otherwise noted)[1]

	MIN	MAX	UNIT
AIN_*n*P, AIN_*n*GND to GND[2]	–20	20	V
AIN_*n*P, AIN_*n*GND to GND[3]	–11	11	V
AUX_GND to GND	–0.3	0.3	V
AUX_IN to GND	–0.3	AVDD + 0.3	V
AVDD to GND or DVDD to GND	–0.3	7	V
REFCAP to REFGND or REFIO to REFGND	–0.3	5.7	V
GND to REFGND	–0.3	0.3	V
Digital input pins to GND	–0.3	DVDD + 0.3	V
Digital output pins to GND	–0.3	DVDD + 0.3	V
Operating temperature, T_A	–40	125	°C
Storage temperature, T_{stg}	–65	150	°C

(1) Stresses beyond those listed under *Absolute Maximum Ratings* may cause permanent damage to the device. These are stress ratings only, and do not imply functional operation of the device at these or any other conditions beyond those indicated under *Recommended Operating Conditions*. Exposure to absolute-maximum-rated conditions for extended periods may affect device reliability.
(2) AVDD = 5 V or offers a low impedance of < 30 kΩ.
(3) AVDD = floating with an impedance > 30 kΩ.

7.2 ESD Ratings

				VALUE	UNIT
$V_{(ESD)}$	Electrostatic discharge	Human body model (HBM), per ANSI/ESDA/JEDEC JS-001[1]	Analog input pins (AIN_*n*P; AIN_*n*GND)	±4000	V
			All other pins	±2000	
		Charged device model (CDM), per JEDEC specification JESD22-C101[2]		±500	

(1) JEDEC document JEP155 states that 500-V HBM allows safe manufacturing with a standard ESD control process.
(2) JEDEC document JEP157 states that 250-V CDM allows safe manufacturing with a standard ESD control process.

7.3 Recommended Operating Conditions

over operating free-air temperature range (unless otherwise noted)

		MIN	NOM	MAX	UNIT
AVDD	Analog supply voltage	4.75	5	5.25	V
DVDD	Digital supply voltage	1.65	3.3	AVDD	V

7.4 Thermal Information

THERMAL METRIC[1]		ADS8674, ADS8678 DBT (TSSOP) 38 PINS	UNIT
$R_{\theta JA}$	Junction-to-ambient thermal resistance	68.8	°C/W
$R_{\theta JC(top)}$	Junction-to-case (top) thermal resistance	19.9	°C/W
$R_{\theta JB}$	Junction-to-board thermal resistance	30.4	°C/W
ψ_{JT}	Junction-to-top characterization parameter	1.3	°C/W
ψ_{JB}	Junction-to-board characterization parameter	29.8	°C/W
$R_{\theta JC(bot)}$	Junction-to-case (bottom) thermal resistance	NA	°C/W

(1) For more information about traditional and new thermal metrics, see the *IC Package Thermal Metrics* application report, SPRA953.

Copyright © 2015, Texas Instruments Incorporated

7.5 Electrical Characteristics

Minimum and maximum specifications are at T_A = –40°C to 125°C. Typical specifications are at T_A = 25°C. AVDD = 5 V, DVDD = 3 V, V_{REF} = 4.096 V (internal), and f_{SAMPLE} = 500 kSPS, unless otherwise noted.

PARAMETER		TEST CONDITIONS	MIN	TYP	MAX	UNIT	TEST LEVEL(1)
ANALOG INPUTS							
	Full-scale input span(2) (AIN_*n*P to AIN_*n*GND)	Input range = ±2.5 × V_{REF}	–2.5 × V_{REF}		2.5 × V_{REF}	V	A
		Input range = ±1.25 × V_{REF}	–1.25 × V_{REF}		1.25 × V_{REF}		A
		Input range = ±0.625 × V_{REF}	–0.625 × V_{REF}		0.625 × V_{REF}		A
		Input range = ±0.3125 × V_{REF}	–0.3125 × V_{REF}		0.3125 × V_{REF}		A
		Input range = ±0.15625 × V_{REF}	–0.15625 × V_{REF}		0.15625 × V_{REF}		A
		Input range = 2.5 × V_{REF}	0		2.5 × V_{REF}		A
		Input range = 1.25 × V_{REF}	0		1.25 × V_{REF}		A
		Input range = 0.625 × V_{REF}	0		0.625 × V_{REF}		A
		Input range = 0.3125 × V_{REF}	0		0.3125 × V_{REF}		A
AIN_*n*P	Operating input range, positive input	Input range = ±2.5 × V_{REF}	–2.5 × V_{REF}		2.5 × V_{REF}	V	A
		Input range = ±1.25 × V_{REF}	–1.25 × V_{REF}		1.25 × V_{REF}		A
		Input range = ±0.625 × V_{REF}	–0.625 × V_{REF}		0.625 × V_{REF}		A
		Input range = ±0.3125 × V_{REF}	–0.3125 × V_{REF}		0.3125 × V_{REF}		A
		Input range = ±0.15625 × V_{REF}	–0.15625 × V_{REF}		0.15625 × V_{REF}		A
		Input range = 2.5 × V_{REF}	0		2.5 × V_{REF}		A
		Input range = 1.25 × V_{REF}	0		1.25 × V_{REF}		A
		Input range = 0.625 × V_{REF}	0		0.625 × V_{REF}		A
		Input range = 0.3125 × V_{REF}	0		0.3125 × V_{REF}		A
AIN_*n*GND	Operating input range, negative input	All input ranges	–0.1	0	0.1	V	B
z_i	Input impedance	At T_A = 25°C, all input ranges	0.85	1	1.15	MΩ	B
	Input impedance drift	All input ranges		7	25	ppm/°C	B
$I_{lkg(in)}$	Input leakage current	With voltage at AIN_*n*P pin = V_{IN}, input range = ±2.5 × V_{REF}		$\frac{V_{IN} - 2.25}{R_{IN}}$		µA	A
		With voltage at AIN_*n*P pin = V_{IN}, input range = ±1.25 × V_{REF}		$\frac{V_{IN} - 2.00}{R_{IN}}$			A
		With voltage at AIN_*n*P pin = V_{IN}, input ranges = ±0.625 × V_{REF}; ±0.3125 × V_{REF}; ±0.15625 × V_{REF}		$\frac{V_{IN} - 1.60}{R_{IN}}$			A
		With voltage at AIN_*n*P pin = V_{IN}, input range = 2.5 × V_{REF}		$\frac{V_{IN} - 2.50}{R_{IN}}$			A
		With voltage at AIN_*n*P pin = V_{IN}, input range = 1.25 × V_{REF}; 0.625 × V_{REF}; 0.3125 × V_{REF}		$\frac{V_{IN} - 2.50}{R_{IN}}$			A
INPUT OVERVOLTAGE PROTECTION							
V_{OVP}	Overvoltage protection voltage	AVDD = 5 V or offers low impedance < 30 kΩ, all input ranges	–20		20	V	B
		AVDD = floating with impedance > 30 kΩ, all input ranges	–11		11		B

(1) Test Levels: **(A)** Tested at final test. Over temperature limits are set by characterization and simulation. **(B)** Limits set by characterization and simulation, across temperature range. **(C)** Typical value only for information, provided by design simulation.
(2) Ideal input span, does not include gain or offset error.

Copyright © 2015, Texas Instruments Incorporated

Electrical Characteristics (continued)

Minimum and maximum specifications are at T_A = –40°C to 125°C. Typical specifications are at T_A = 25°C. AVDD = 5 V, DVDD = 3 V, V_{REF} = 4.096 V (internal), and f_{SAMPLE} = 500 kSPS, unless otherwise noted.

PARAMETER		TEST CONDITIONS	MIN	TYP	MAX	UNIT	TEST LEVEL (1)
SYSTEM PERFORMANCE							
	Resolution		14			Bits	A
NMC	No missing codes		14			Bits	A
DNL	Differential nonlinearity		–0.5	±0.2	0.5	LSB (3)	A
INL	Integral nonlinearity (4)		–0.75	±0.25	0.75	LSB	A
E_G	Gain error	At T_A = 25°C, all input ranges		±0.02	±0.05	%FSR (5)	A
	Gain error matching (channel-to-channel)	At T_A = 25°C, all input ranges		±0.02	±0.05	%FSR	A
	Gain error temperature drift	All input ranges		1	4	ppm/°C	B
E_O	Offset error	At T_A = 25°C, input range = ±2.5 × V_{REF} (6)		±0.5	±1	mV	A
		At T_A = 25°C, all other input ranges		±0.5	±2		A
	Offset error matching (channel-to-channel)	At T_A = 25°C, input range = ±2.5 × V_{REF} (6)		±0.5	±1	mV	A
		At T_A = 25°C, all other input ranges		±0.5	±2		A
	Offset error temperature drift	Input range = ±2.5 × V_{REF}		1	3	ppm/°C	B
		Input range = ±1.25 × V_{REF}		1	3		B
		Input range = ±0.625 × V_{REF}		1	3		B
		Input range = ±0.3125 × V_{REF}		2	6		B
		Input range = ±0.15625 × V_{REF}		4	12		B
		Input range = 0 to 2.5 × V_{REF}		1	3		B
		Input range = 0 to 1.25 × V_{REF}		1	3		B
		Input range = 0 to 0.625 × V_{REF}		2	6		B
		Input range = 0 to 0.3125 × V_{REF}		4	12		B
SAMPLING DYNAMICS							
t_{CONV}	Conversion time				850	ns	A
t_{ACQ}	Acquisition time		1150			ns	A
f_S	Maximum throughput rate without latency				500	kSPS	A

(3) LSB = least significant bit.
(4) This parameter is the endpoint INL, not best-fit INL.
(5) FSR = full-scale range.
(6) Does not include the shift in offset over time.

Copyright © 2015, Texas Instruments Incorporated

Electrical Characteristics (continued)

Minimum and maximum specifications are at T_A = –40°C to 125°C. Typical specifications are at T_A = 25°C. AVDD = 5 V, DVDD = 3 V, V_{REF} = 4.096 V (internal), and f_{SAMPLE} = 500 kSPS, unless otherwise noted.

PARAMETER		TEST CONDITIONS	MIN	TYP	MAX	UNIT	TEST LEVEL(1)
DYNAMIC CHARACTERISTICS							
SNR	Signal-to-noise ratio (V_{IN} – 0.5 dBFS at 1 kHz)	Input range = ±2.5 × V_{REF}	84.5	85		dB	A
		Input range = ±1.25 × V_{REF}	84.2	85			A
		Input range = ±0.625 × V_{REF}	83.5	84.5			A
		Input range = ±0.3125 × V_{REF}	80	82			A
		Input range = ±0.15625 × V_{REF}	75	77			A
		Input range = 2.5 × V_{REF}	84	85			A
		Input range = 1.25 × V_{REF}	83.5	84.5			A
		Input range = 0.625 × V_{REF}	80	82			A
		Input range = 0.3125 × V_{REF}	75	77			A
THD	Total harmonic distortion(7) (V_{IN} – 0.5 dBFS at 1 kHz)	All input ranges		–100		dB	B
SINAD	Signal-to-noise ratio (V_{IN} – 0.5 dBFS at 1 kHz)	Input range = ±2.5 × V_{REF}	84.3	84.8		dB	A
		Input range = ±1.25 × V_{REF}	84	84.8			A
		Input range = ±0.625 × V_{REF}	83.3	84.3			A
		Input range = ±0.3125 × V_{REF}	80	82			A
		Input range = ±0.15625 × V_{REF}	75	77			A
		Input range = 2.5 × V_{REF}	83.8	84.8			A
		Input range = 1.25 × V_{REF}	83.3	84.3			A
		Input range = 0.625 × V_{REF}	80	82			A
		Input range = 0.3125 × V_{REF}	75	77			A
SFDR	Spurious-free dynamic range (V_{IN} – 0.5 dBFS at 1 kHz)	All input ranges		101		dB	B
	Crosstalk isolation(8)	Aggressor channel input overdriven to 2 × maximum input voltage		110		dB	B
	Crosstalk memory(9)	Aggressor channel input overdriven to 2 × maximum input voltage		90		dB	B
$BW_{(–3\ dB)}$	Small-signal bandwidth, –3 dB	At T_A = 25°C, all input ranges		15		kHz	B
$BW_{(–0.1\ dB)}$	Small-signal bandwidth, –0.1 dB	At T_A = 25°C, all input ranges		2.5		kHz	B
AUXILIARY CHANNEL							
	Resolution		14			Bits	A
$V_{(AUX_IN)}$	AUX_IN voltage range	(AUX_IN – AUX_GND)	0		V_{REF}	V	A
	Operating input range	AUX_IN	0		V_{REF}	V	A
		AUX_GND		0		V	A
C_i	Input capacitance	During sampling		75		pF	C
		During conversion		5		pF	C
$I_{lkg(in)}$	Input leakage current			100		nA	A
DNL	Differential nonlinearity		–0.75	±0.5	0.75	LSB	A
INL	Integral nonlinearity		–1	±0.5	1	LSB	A
$E_{G(AUX)}$	Gain error	At T_A = 25°C		±0.02	±0.2	%FSR	A
$E_{O(AUX)}$	Offset error	At T_A = 25°C	–5		5	mV	A
SNR	Signal-to-noise ratio	$V_{(AUX_IN)}$ = –0.5 dBFS at 1 kHz	83.3	84.4		dB	A
THD	Total harmonic distortion(7)	$V_{(AUX_IN)}$ = –0.5 dBFS at 1 kHz		–100		dB	B
SINAD	Signal-to-noise + distortion	$V_{(AUX_IN)}$ = –0.5 dBFS at 1 kHz	83	84.3		dB	A
SFDR	Spurious-free dynamic range	$V_{(AUX_IN)}$ = –0.5 dBFS at 1 kHz		100		dB	B

(7) Calculated on the first nine harmonics of the input frequency.
(8) Isolation crosstalk is measured by applying a full-scale sinusoidal signal up to 10 kHz to a channel, not selected in the multiplexing sequence, and measuring its effect on the output of any selected channel.
(9) Memory crosstalk is measured by applying a full-scale sinusoidal signal up to 10 kHz to a channel that is selected in the multiplexing sequence, and measuring its effect on the output of the next selected channel for all combinations of input channels.

Copyright © 2015, Texas Instruments Incorporated

Electrical Characteristics (continued)

Minimum and maximum specifications are at T_A = –40°C to 125°C. Typical specifications are at T_A = 25°C. AVDD = 5 V, DVDD = 3 V, V_{REF} = 4.096 V (internal), and f_{SAMPLE} = 500 kSPS, unless otherwise noted.

PARAMETER			TEST CONDITIONS	MIN	TYP	MAX	UNIT	TEST LEVEL (1)
INTERNAL REFERENCE OUTPUT								
$V_{(REFIO_INT)}$ (10)	Voltage on REFIO pin (configured as output)		At T_A = 25°C	4.094	4.096	4.098	V	A
	Internal reference temperature drift				8	20	ppm/°C	B
$C_{(OUT_REFIO)}$	Decoupling capacitor on REFIO			10	22		µF	B
$V_{(REFCAP)}$	Reference voltage to ADC (on REFCAP pin)		At T_A = 25°C	4.094	4.096	4.098	V	A
	Reference buffer output impedance				0.5	1	Ω	B
	Reference buffer temperature drift				0.6	1.5	ppm/°C	B
$C_{(OUT_REFCAP)}$	Decoupling capacitor on REFCAP			10	22		µF	B
	Turn-on time		$C_{(OUT_REFCAP)}$ = 22 µF, $C_{(OUT_REFIO)}$ = 22 µF		15		ms	B
EXTERNAL REFERENCE INPUT								
V_{REFIO_EXT}	External reference voltage on REFIO (configured as input)			4.046	4.096	4.146	V	C
POWER-SUPPLY REQUIREMENTS								
AVDD	Analog power-supply voltage		Analog supply	4.75	5	5.25	V	B
DVDD	Digital power-supply voltage		Digital supply range	1.65	3.3	AVDD	V	B
			Digital supply range for specified performance	2.7	3.3	5.25		B
I_{AVDD_DYN}	Analog supply current	Dynamic, AVDD	For the ADS8678; AVDD = 5 V, f_S = maximum and internal reference		13	16	mA	A
			For the ADS8674; AVDD = 5 V, f_S = maximum and internal reference		8.5	11.5		A
I_{AVDD_STC}		Static	For the ADS8678; AVDD = 5 V, device not converting and internal reference		10	12	mA	A
			For the ADS8674; AVDD = 5 V, device not converting and internal reference		5.5	8.5		A
I_{STDBY}		Standby	At AVDD = 5 V, device in STDBY mode and internal reference		3	4.5	mA	A
I_{PWR_DN}		Power-down	At AVDD = 5 V, device in PWR_DN		3	20	µA	B
I_{DVDD_DYN}	Digital supply current		At DVDD = 3.3 V, output = 0000h		0.5		mA	A
DIGITAL INPUTS (CMOS)								
V_{IH}	Digital input logic levels DVDD > 2.1 V			0.7 × DVDD		DVDD + 0.3	V	A
V_{IL}				–0.3		0.3 × DVDD		A
V_{IH}	Digital input logic levels DVDD ≤ 2.1 V			0.8 × DVDD		DVDD + 0.3	V	A
V_{IL}				–0.3		0.2 × DVDD		A
	Input leakage current				100		nA	A
	Input pin capacitance				5		pF	C
DIGITAL OUTPUTS (CMOS)								
V_{OH}	Digital output logic levels		I_O = 500-µA source	0.8 × DVDD		DVDD	V	A
V_{OL}			I_O = 500-µA sink	0		0.2 × DVDD		A
	Floating state leakage current		Only for SDO		1		µA	A
	Internal pin capacitance				5		pF	C
TEMPERATURE RANGE								
T_A	Operating free-air temperature			–40		125	°C	B

(10) Does not include the variation in voltage resulting from solder-shift and long-term effects.

7.6 Timing Requirements: Serial Interface

Minimum and maximum specifications are at T_A = –40°C to 125°C. Typical specifications are at T_A = 25°C.
AVDD = 5 V, DVDD = 3 V, V_{REF} = 4.096 V (internal), SDO load = 20 pF, and f_{SAMPLE} = 500 kSPS, unless otherwise noted.

		MIN	TYP	MAX	UNIT
TIMING SPECIFICATIONS					
f_S	Sampling frequency (f_{CLK} = max)			500	kSPS
t_S	ADC cycle time period (f_{CLK} = max)	2			µs
f_{SCLK}	Serial clock frequency (f_S = max)			17	MHz
t_{SCLK}	Serial clock time period (f_S = max)	59			ns
t_{CONV}	Conversion time			850	ns
t_{DZ_CSDO}	Delay time: $\overline{CS}$ falling to data enable			10	ns
t_{D_CKCS}	Delay time: last SCLK falling to $\overline{CS}$ rising	10			ns
t_{DZ_CSDO}	Delay time: $\overline{CS}$ rising to SDO going to 3-state	10			ns
TIMING REQUIREMENTS					
t_{ACQ}	Acquisition time	1150			ns
t_{PH_CK}	Clock high time	0.4		0.6	t_{SCLK}
t_{PL_CK}	Clock low time	0.4		0.6	t_{SCLK}
t_{PH_CS}	$\overline{CS}$ high time	30			ns
t_{SU_CSCK}	Setup time: $\overline{CS}$ falling to SCLK falling	30			ns
t_{HT_CKDO}	Hold time: SCLK falling to (previous) data valid on SDO	10			ns
t_{SU_DOCK}	Setup time: SDO data valid to SCLK falling	25			ns
t_{SU_DICK}	Setup time: SDI data valid to SCLK falling	5			ns
t_{HT_CKDI}	Hold time: SCLK falling to (previous) data valid on SDI	5			ns
t_{SU_DSYCK}	Setup time: DAISY data valid to SCLK falling	5			ns
t_{HT_CKDSY}	Hold time: SCLK falling to (previous) data valid on DAISY	5			ns

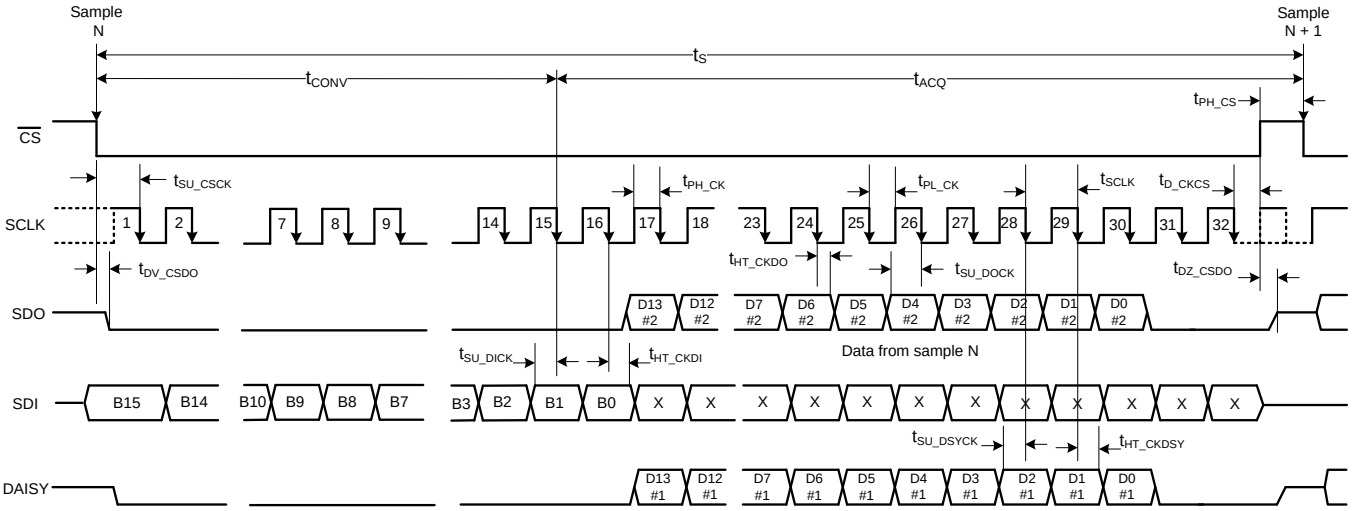

Figure 1. Serial Interface Timing Diagram

Copyright © 2015, Texas Instruments Incorporated

7.7 Typical Characteristics

At T_A = 25°C, AVDD = 5 V, DVDD = 3 V, internal reference V_{REF} = 4.096 V, and f_{SAMPLE} = 500 kSPS, unless otherwise noted.

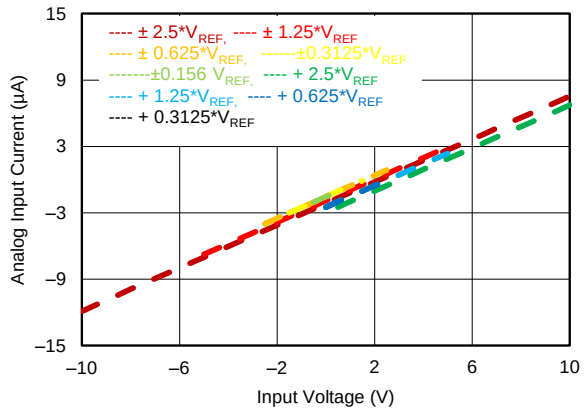

Figure 2. Input I-V Characteristic

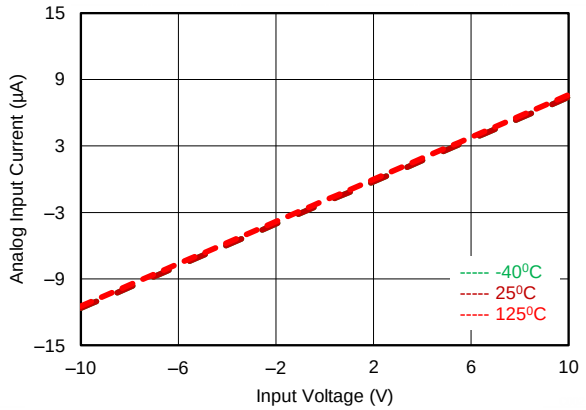

Input range = ±2.5 × V_{REF}

Figure 3. Input Current vs Temperature

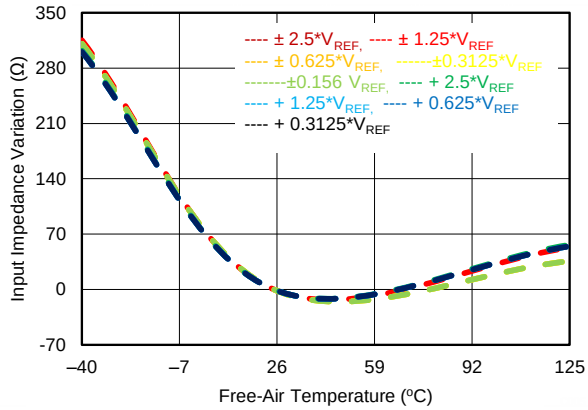

Figure 4. Input Impedance Variation vs Temperature

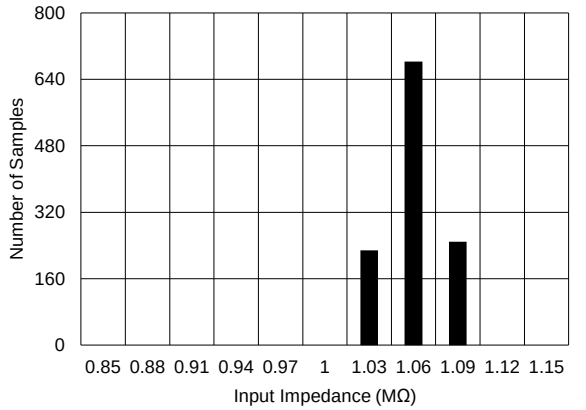

Number of samples = 1160

Figure 5. Typical Distribution of Input Impedance

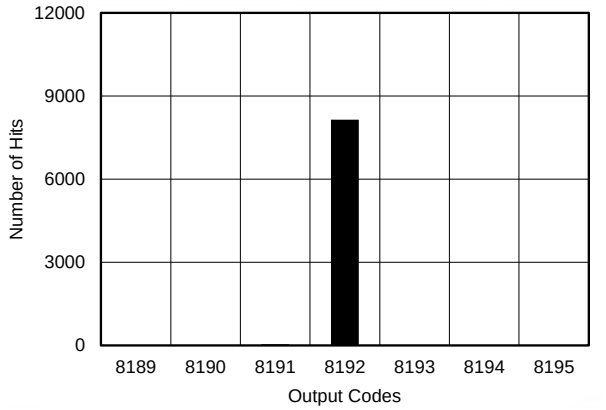

Mean = 8192.5, sigma = 0.31, input = 0 V,
range = ±2.5 × V_{REF}

Figure 6. DC Histogram for Mid-Scale Inputs (±2.5 × V_{REF})

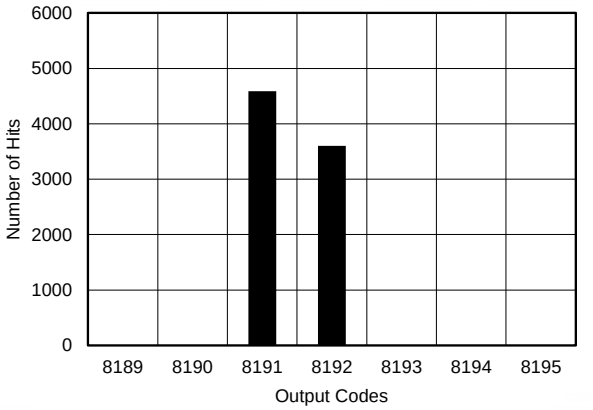

Mean = 8192.5, sigma = 0.32, input = 0 V,
range = ±1.25 × V_{REF}

Figure 7. DC Histogram for Mid-Scale Inputs (±1.25 × V_{REF})

Typical Characteristics (continued)

At T_A = 25°C, AVDD = 5 V, DVDD = 3 V, internal reference V_{REF} = 4.096 V, and f_{SAMPLE} = 500 kSPS, unless otherwise noted.

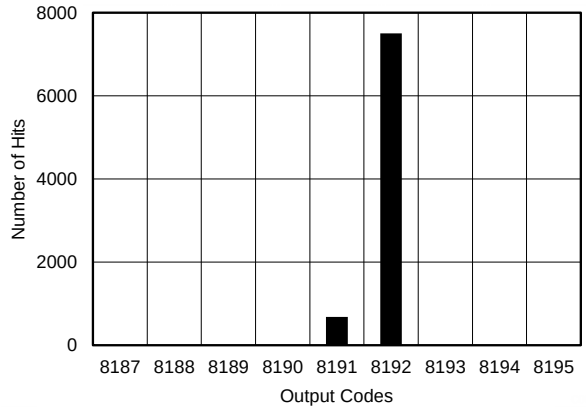

Mean = 8192.5, sigma = 0.34, input = 0 V, range = ±0.625 × V_{REF}

Figure 8. DC Histogram for Mid-Scale Inputs (±0.625 × V_{REF})

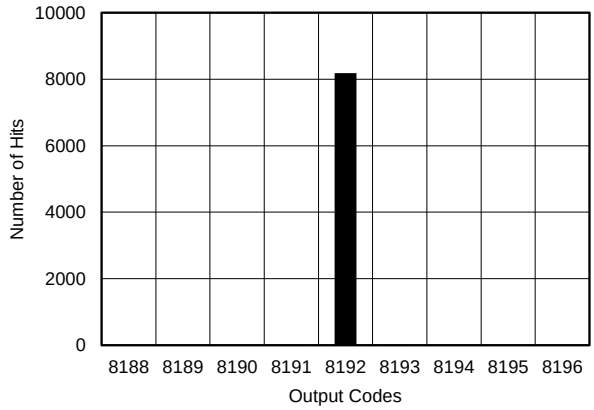

Mean = 8192.5, sigma = 0.32, input = 1.25 × V_{REF}, range = 2.5 × V_{REF}

Figure 9. DC Histogram for Mid-Scale Inputs (2.5 × V_{REF})

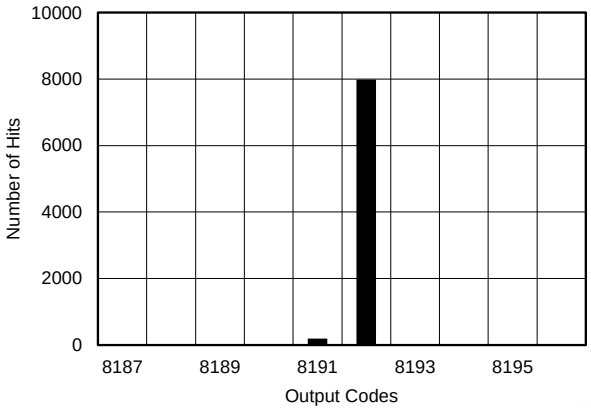

Mean = 8192.5, sigma = 0.34, input = 0.625 × V_{REF}, range = 1.25 × V_{REF}

Figure 10. DC Histogram for Mid-Scale Inputs (1.25 × V_{REF})

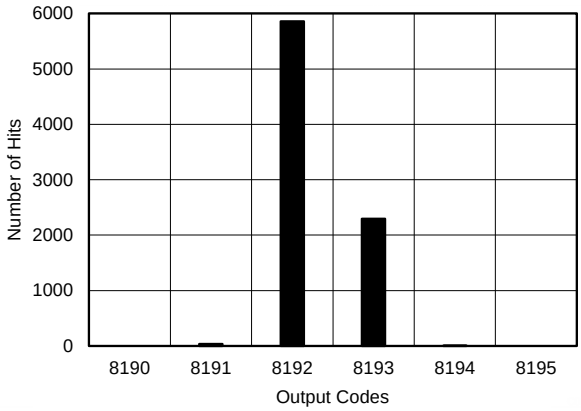

Mean = 8192.5, sigma = 0.43, input = 0 V, range = ±0.3125 × V_{REF}

Figure 11. DC Histogram for Mid-Scale Inputs (±0.3125 x V_{REF})

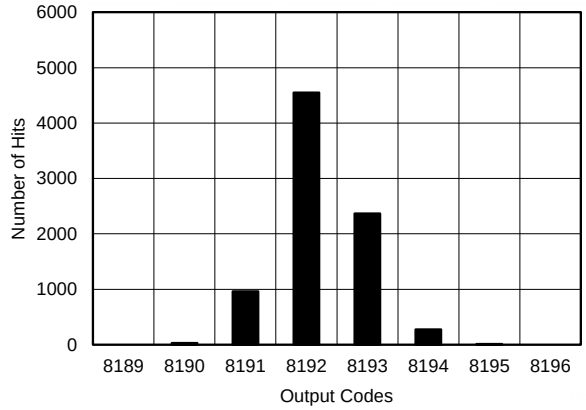

Mean = 8192.5, sigma = 0.72, input = 0 V, range = ±0.15625 × V_{REF}

Figure 12. DC Histogram for Mid-Scale Inputs (±0.15625 x V_{REF})

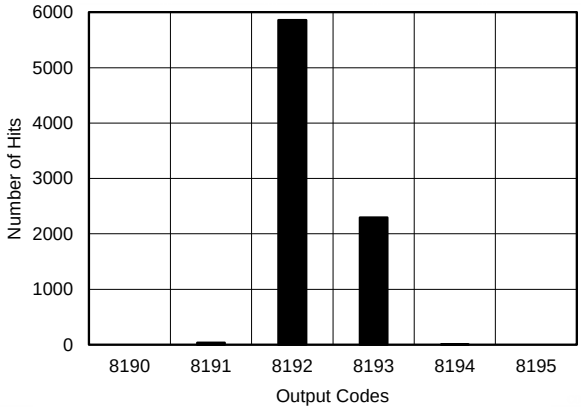

Mean = 8192.5, sigma = 0.72, input = 0.3125 × V_{REF}, range = 0.625 × V_{REF}

Figure 13. DC Histogram for Mid-Scale Inputs (0.625 x V_{REF})

Copyright © 2015, Texas Instruments Incorporated

Typical Characteristics (continued)

At T_A = 25°C, AVDD = 5 V, DVDD = 3 V, internal reference V_{REF} = 4.096 V, and f_{SAMPLE} = 500 kSPS, unless otherwise noted.

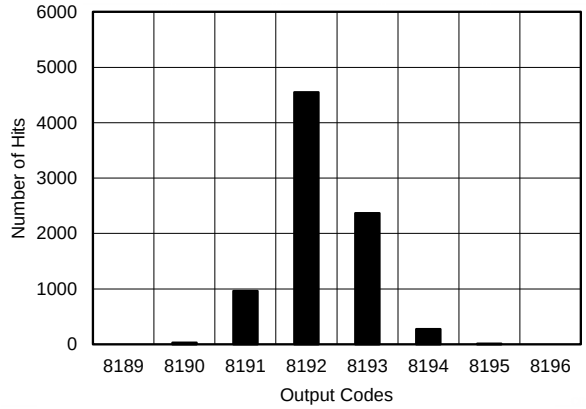

Mean = 8192.5, sigma = 0.750.72, input = 0.15625 × V_{REF}, range = 0.3125 × V_{REF}

Figure 14. DC Histogram for Mid-Scale Inputs (0.3125 x V_{REF})

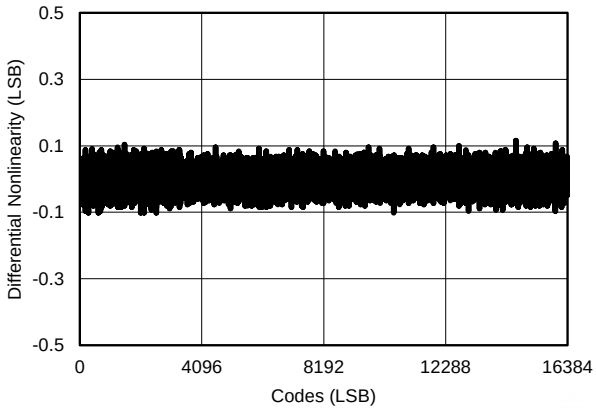

All input ranges

Figure 15. Typical DNL for All Codes

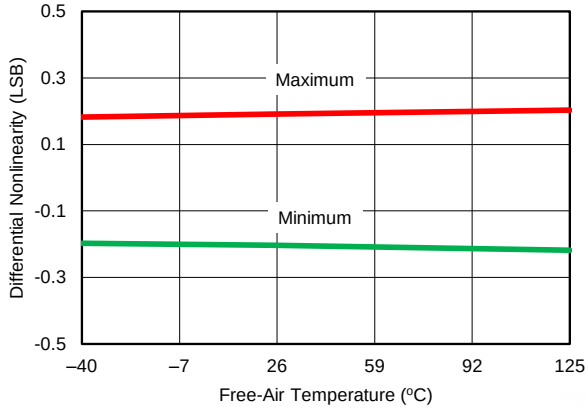

All input ranges

Figure 16. DNL vs Temperature

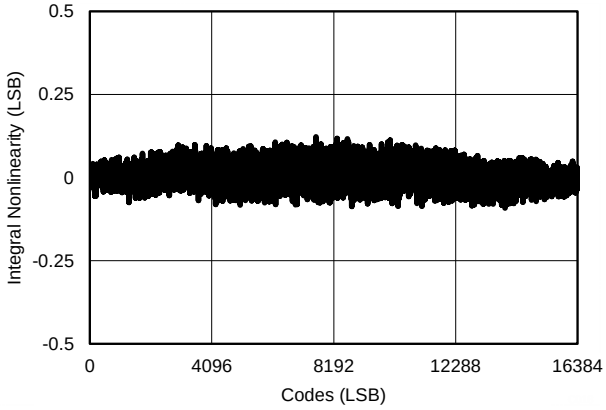

Range = ±2.5 × V_{REF}

Figure 17. Typical INL for All Codes

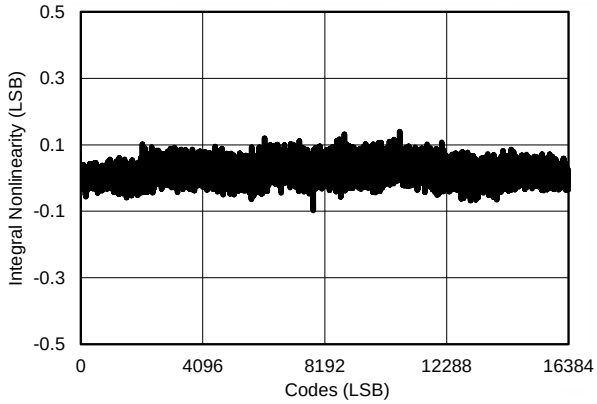

Range = ±1.25 × V_{REF}

Figure 18. Typical INL for All Codes

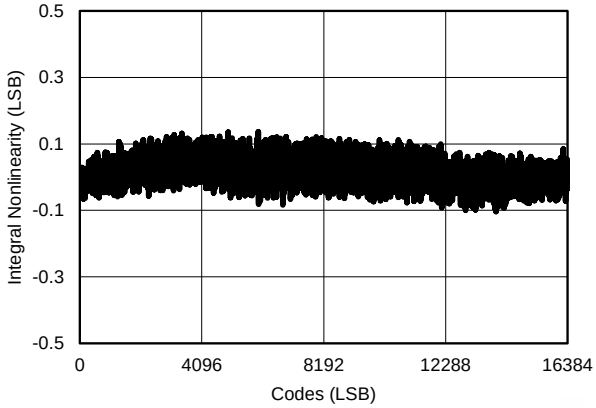

Range = ±0.625 × V_{REF}

Figure 19. Typical INL for All Codes

Typical Characteristics (continued)

At T_A = 25°C, AVDD = 5 V, DVDD = 3 V, internal reference V_{REF} = 4.096 V, and f_{SAMPLE} = 500 kSPS, unless otherwise noted.

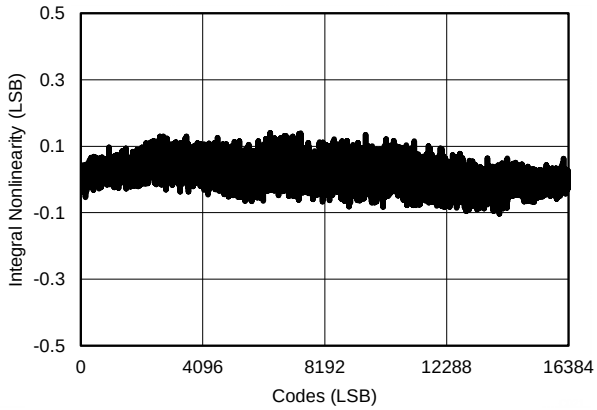

Range = 2.5 × V_{REF}

Figure 20. Typical INL for All Codes

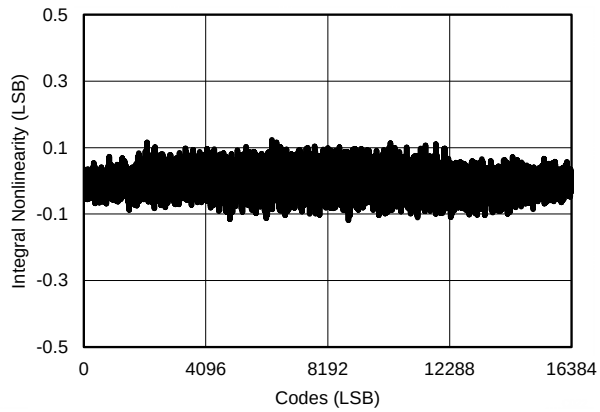

Range = 1.25 × V_{REF}

Figure 21. Typical INL for All Codes

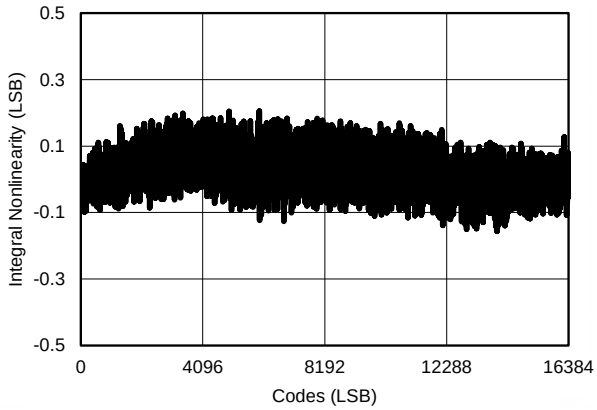

Range = ±0.3125 × V_{REF}

Figure 22. Typical INL for All Codes

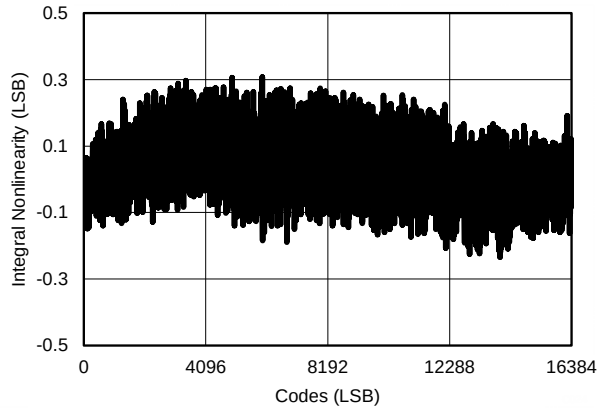

Range = ±0.15625 × V_{REF}

Figure 23. Typical INL for All Codes

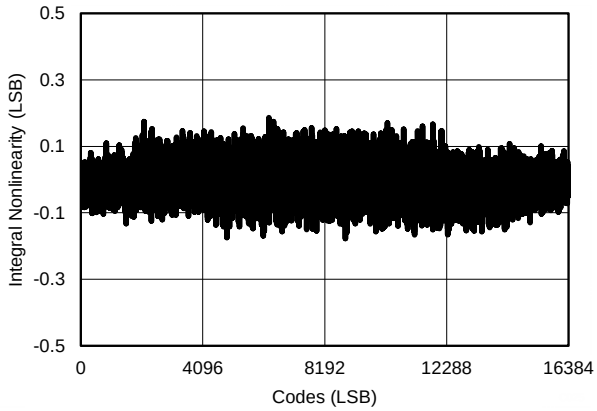

Range = 0.625 × V_{REF}

Figure 24. Typical INL for All Codes

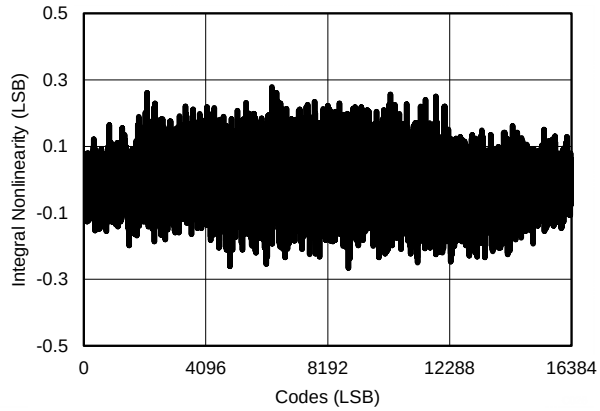

Range = 0.3125 × V_{REF}

Figure 25. Typical INL for All Codes

Copyright © 2015, Texas Instruments Incorporated

Typical Characteristics (continued)

At T_A = 25°C, AVDD = 5 V, DVDD = 3 V, internal reference V_{REF} = 4.096 V, and f_{SAMPLE} = 500 kSPS, unless otherwise noted.

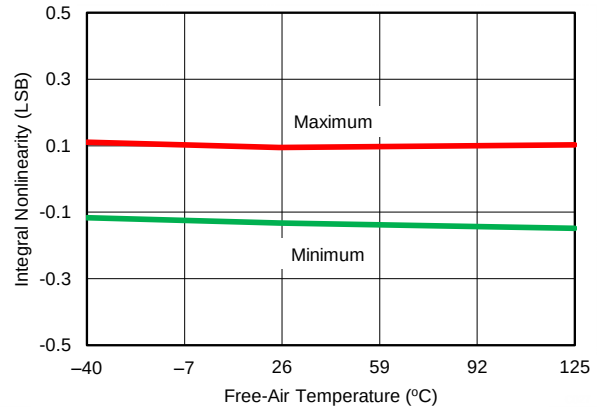

Range = ±2.5 × V_{REF}

Figure 26. INL vs Temperature (±2.5 × V_{REF})

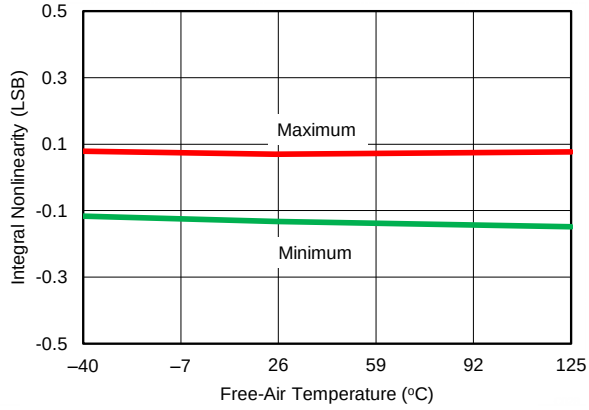

Range = ±1.25 × V_{REF}

Figure 27. INL vs Temperature (±1.25 × V_{REF})

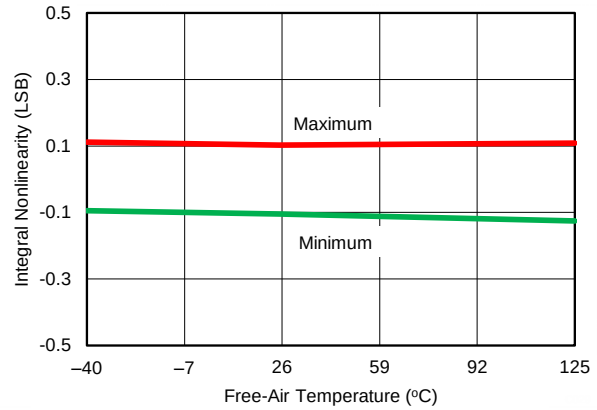

Range = ±0.625 × V_{REF}

Figure 28. INL vs Temperature (±0.625 × V_{REF})

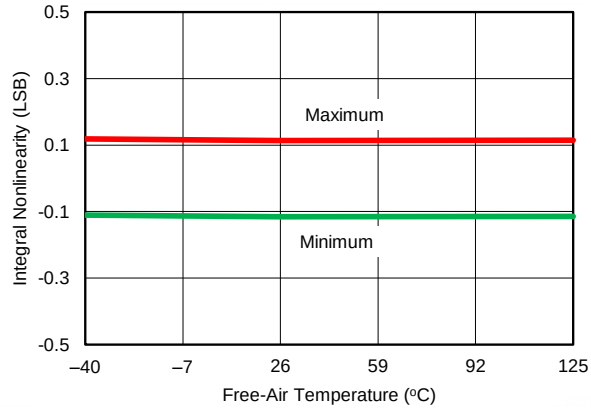

Range = 2.5 × V_{REF}

Figure 29. INL vs Temperature (2.5 × V_{REF})

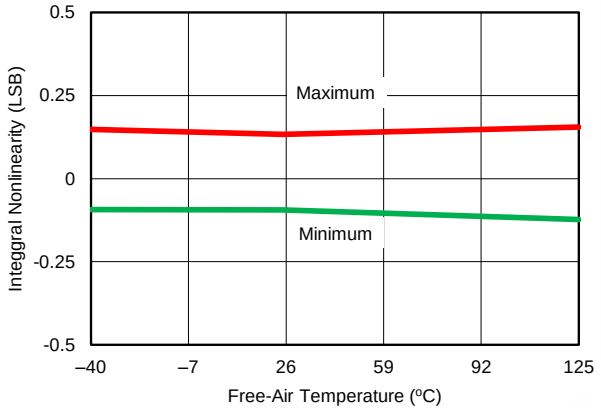

Range = 1.25 × V_{REF}

Figure 30. INL vs Temperature (1.25 × V_{REF})

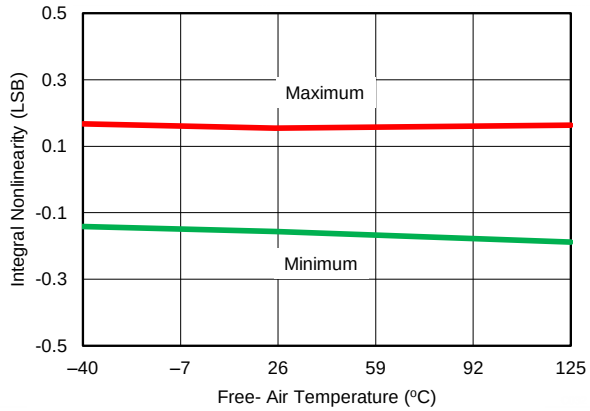

Range = ±0.3125 × V_{REF}

Figure 31. INL vs Temperature (±0.3125 × V_{REF})

Typical Characteristics (continued)

At T_A = 25°C, AVDD = 5 V, DVDD = 3 V, internal reference V_{REF} = 4.096 V, and f_{SAMPLE} = 500 kSPS, unless otherwise noted.

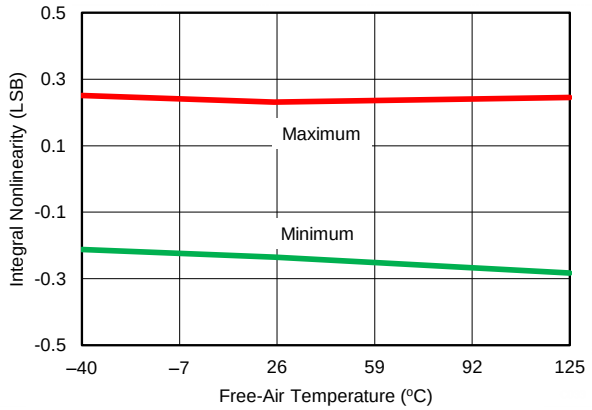

Range = ±0.15625 × V_{REF}

Figure 32. INL vs Temperature (±0.15625 × V_{REF})

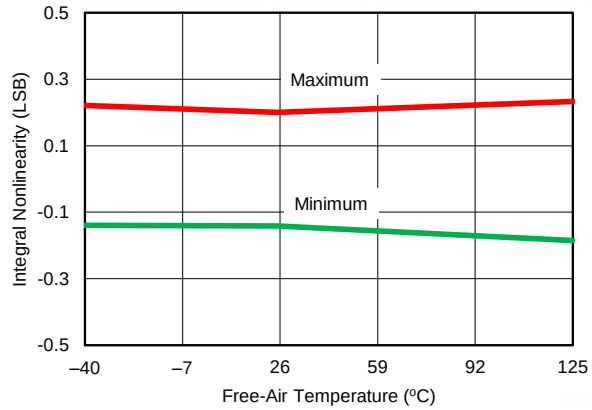

Range = 0.625 × V_{REF}

Figure 33. INL vs Temperature (0.625 × V_{REF})

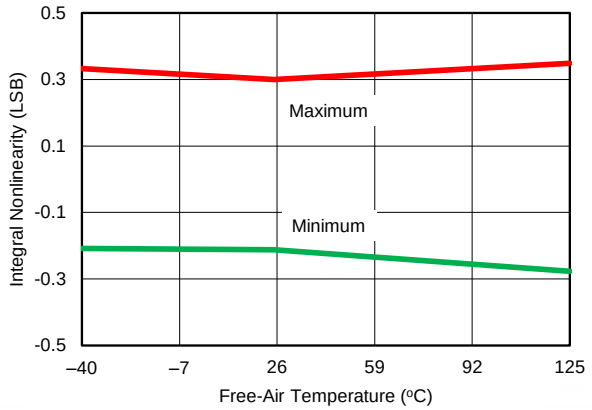

Range = 0.3125 × V_{REF}

Figure 34. INL vs Temperature (0.3125 × V_{REF})

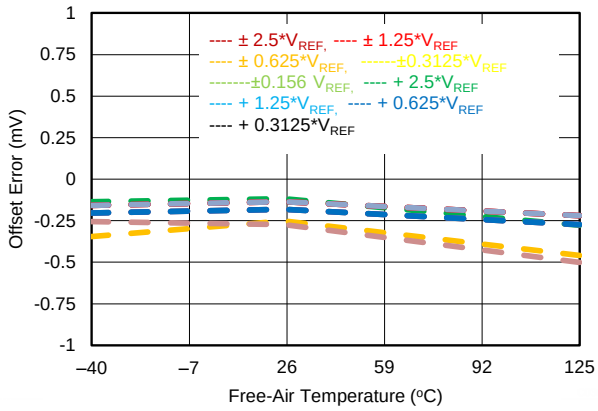

Figure 35. Offset Error vs Temperature Across Input Ranges

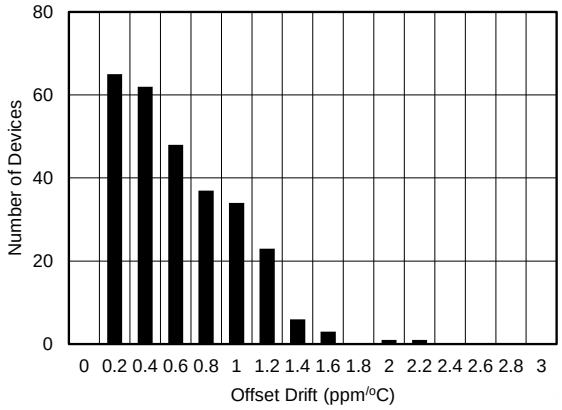

Range = ±2.5 × V_{REF}

Figure 36. Typical Histogram for Offset Drift

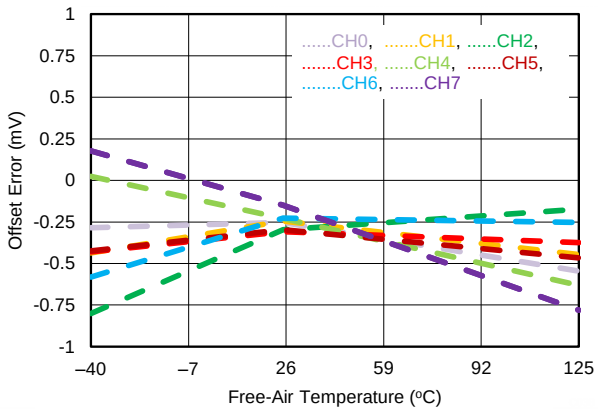

Range = ±2.5 × V_{REF}

Figure 37. Offset Error vs Temperature Across Channels

Copyright © 2015, Texas Instruments Incorporated

Typical Characteristics (continued)

At T_A = 25°C, AVDD = 5 V, DVDD = 3 V, internal reference V_{REF} = 4.096 V, and f_{SAMPLE} = 500 kSPS, unless otherwise noted.

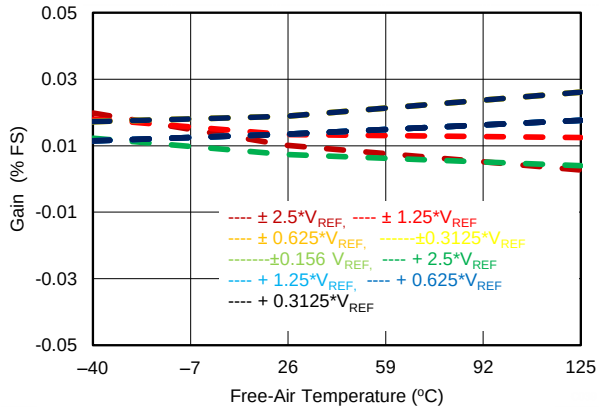

Figure 38. Gain Error vs Temperature Across Input Ranges

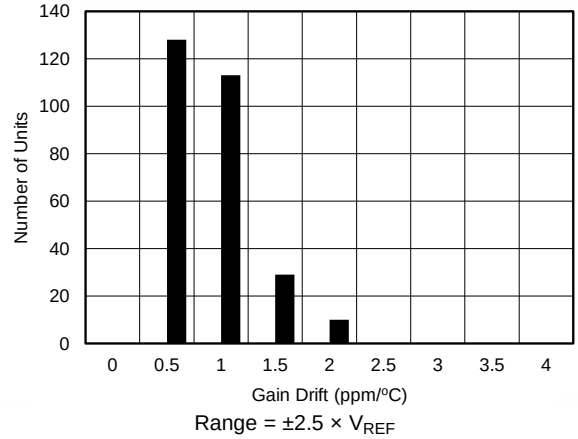

Figure 39. Typical Histogram for Gain Error Drift

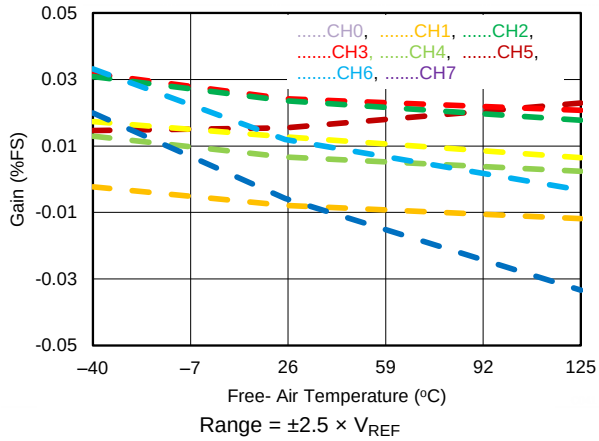

Figure 40. Gain Error vs Temperature Across Channels

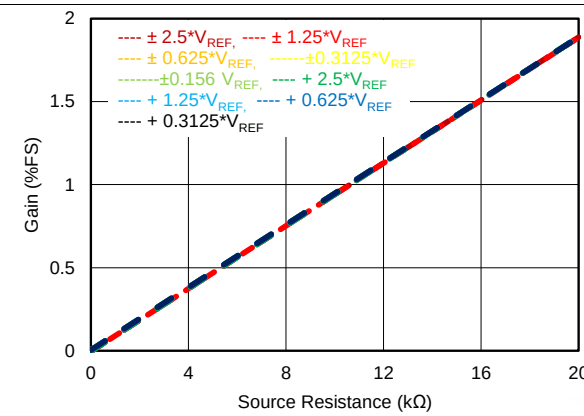

Figure 41. Gain Error vs External Resistance (R_{EXT})

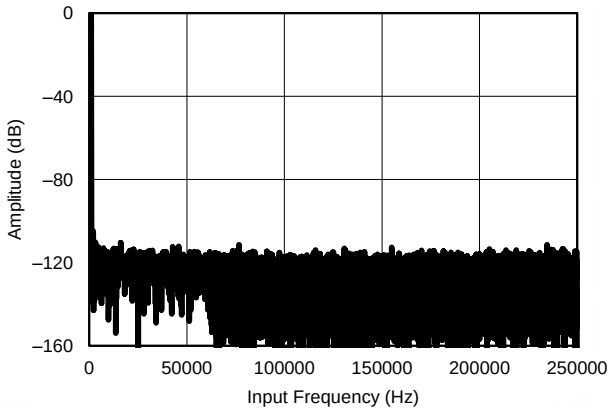

Number of points = 16k, f_{IN} = 1 kHz, SNR = 85.37 dB, SINAD = 85.35, THD = –104.68 dB, SFDR = 105 dB

Figure 42. Typical FFT Plot (±2.5 × V_{REF})

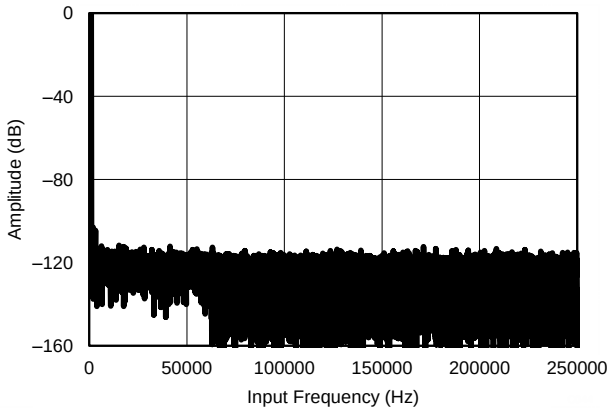

Number of points = 16k, f_{IN} = 1 kHz, SNR = 85.11 dB, SINAD = 85.15 dB, THD = –105.28 dB, SFDR = 105 dB

Figure 43. Typical FFT Plot (±1.25 × V_{REF})

Typical Characteristics (continued)

At T_A = 25°C, AVDD = 5 V, DVDD = 3 V, internal reference V_{REF} = 4.096 V, and f_{SAMPLE} = 500 kSPS, unless otherwise noted.

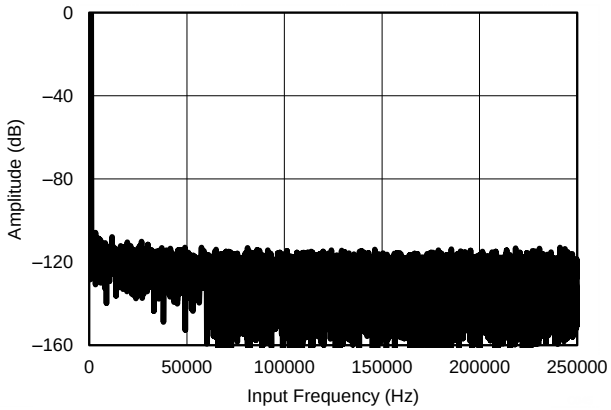

Number of points = 16k, f_{IN} = 1 kHz, SNR = 84.69 dB, SINAD = 84.67 dB, THD = –106.41 dB, SFDR = 105 dB

Figure 44. Typical FFT Plot (±0.625 × V_{REF})

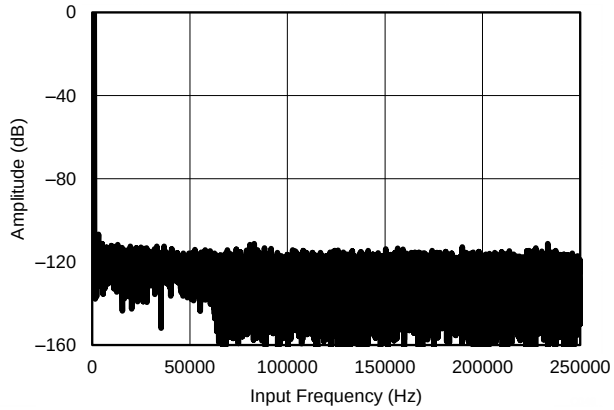

Number of points = 16k, f_{IN} = 1 kHz, SNR = 85.04 dB, SINAD = 85.04 dB, THD = –106.31 dB, SFDR = 105 dB

Figure 45. Typical FFT Plot (2.5 × V_{REF})

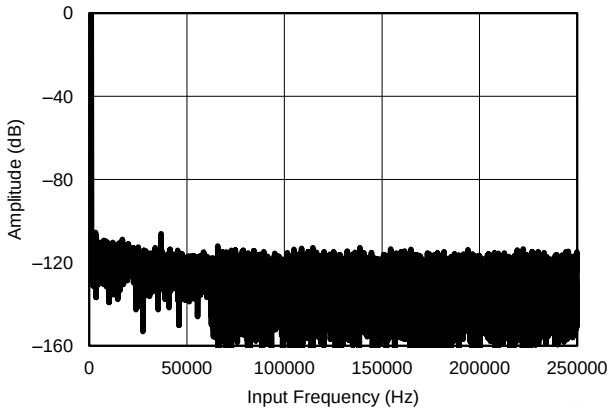

Number of points = 16k, f_{IN} = 1 kHz, SNR = 84.62 dB, SINAD = 84.65 dB, THD = –103.74 dB, SFDR = 105 dB

Figure 46. Typical FFT Plot (1.25 × V_{REF})

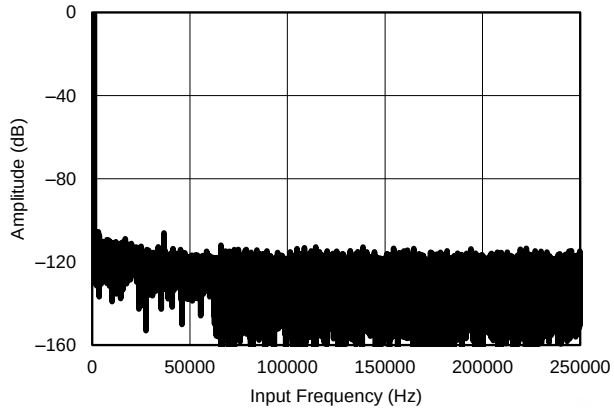

Number of points = 16k, f_{IN} = 1 kHz, SNR = 82.59 dB, SINAD = 82.56 dB, THD = –102.41 dB, SFDR = 105 dB

Figure 47. Typical FFT Plot (±0.3125 × V_{REF})

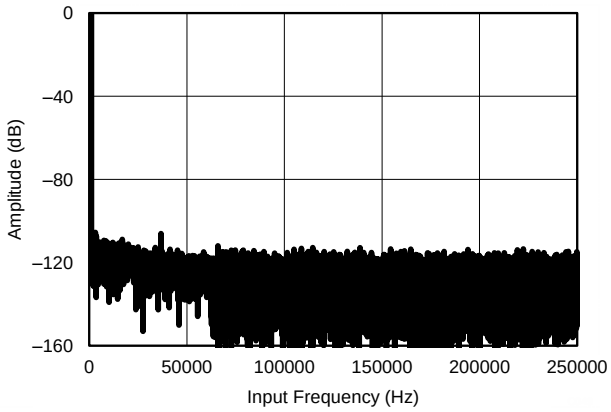

Number of points = 16k, f_{IN} = 1 kHz, SNR = 78.09 dB, SINAD = 78.06 dB, THD = –99.41 dB, SFDR = 105 dB

Figure 48. Typical FFT Plot (±0.15625 × V_{REF})

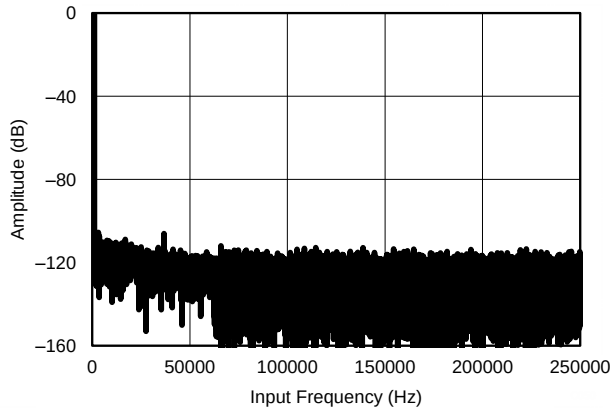

Number of points = 16k, f_{IN} = 1 kHz, SNR = 82.59 dB, SINAD = 82.55 dB, THD = –99.74 dB, SFDR = 105 dB

Figure 49. Typical FFT Plot (0.625 × V_{REF})

Copyright © 2015, Texas Instruments Incorporated

Typical Characteristics (continued)

At T_A = 25°C, AVDD = 5 V, DVDD = 3 V, internal reference V_{REF} = 4.096 V, and f_{SAMPLE} = 500 kSPS, unless otherwise noted.

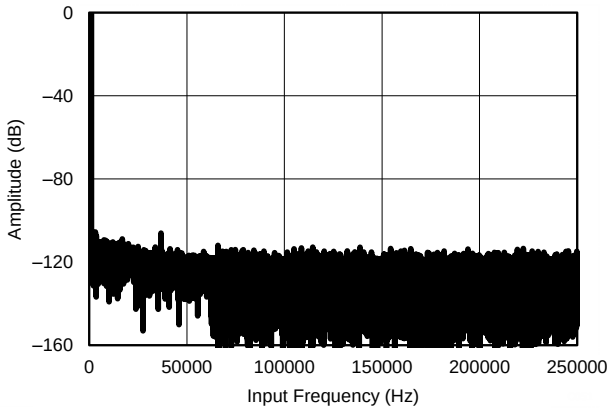

Number of points = 16k, f_{IN} = 1 kHz, SNR = 78.09 dB, SINAD = 78.05 dB, THD = –96.74 dB, SFDR = 105 dB

Figure 50. Typical FFT Plot (0.3125 × V_{REF})

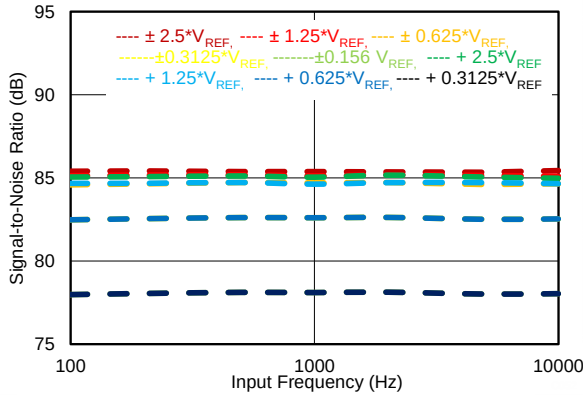

Figure 51. SNR vs Input Frequency

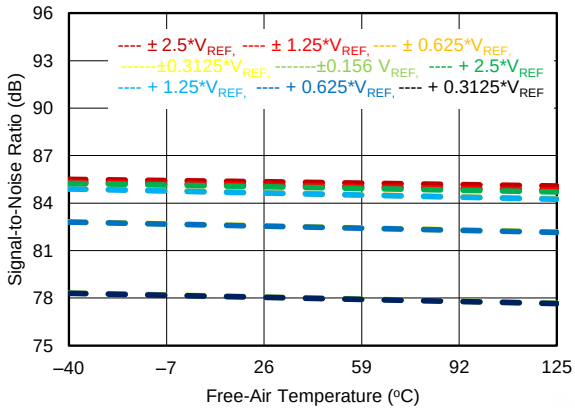

f_{IN} = 1 kHz

Figure 52. SNR vs Temperature

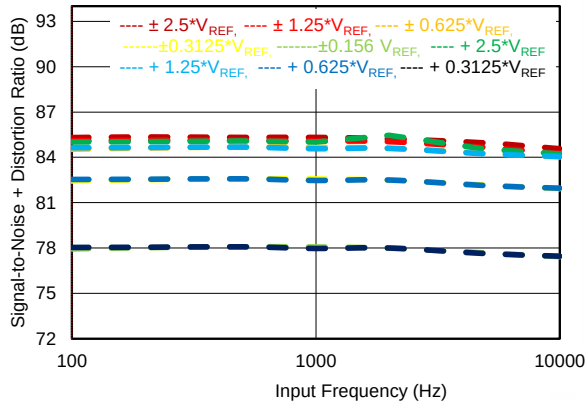

Figure 53. SINAD vs Input Frequency

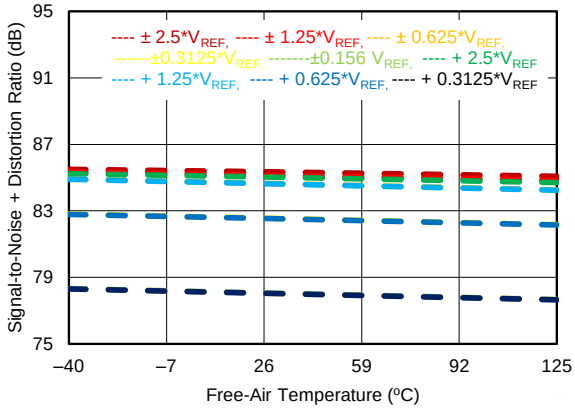

f_{IN} = 1 kHz

Figure 54. SINAD vs Temperature

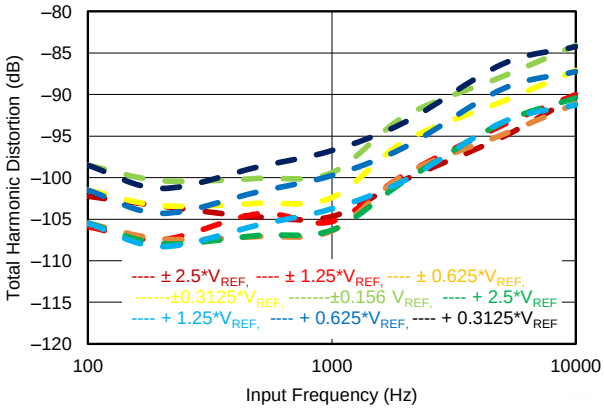

Figure 55. THD vs Input Frequency

Typical Characteristics (continued)

At T_A = 25°C, AVDD = 5 V, DVDD = 3 V, internal reference V_{REF} = 4.096 V, and f_{SAMPLE} = 500 kSPS, unless otherwise noted.

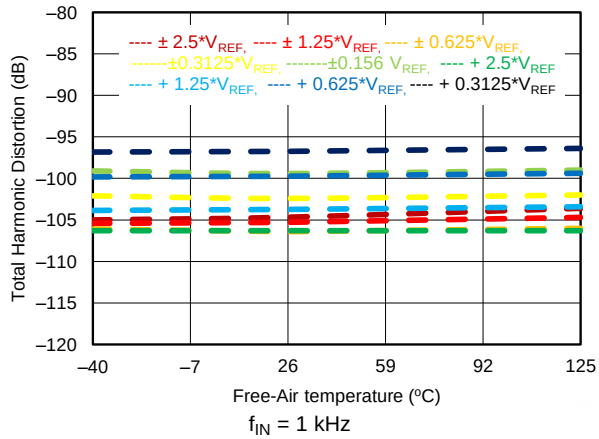

f_{IN} = 1 kHz

Figure 56. THD vs Temperature

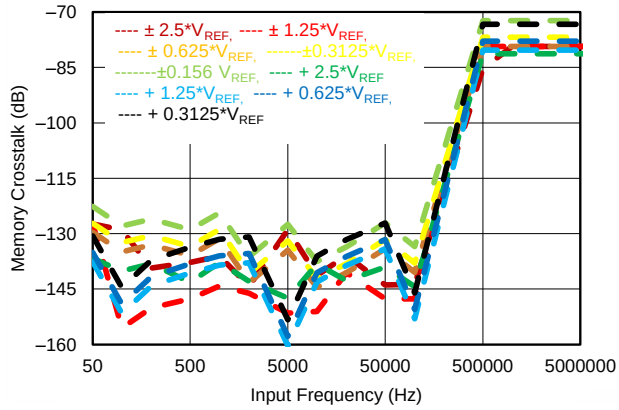

Figure 57. Memory Crosstalk vs Frequency

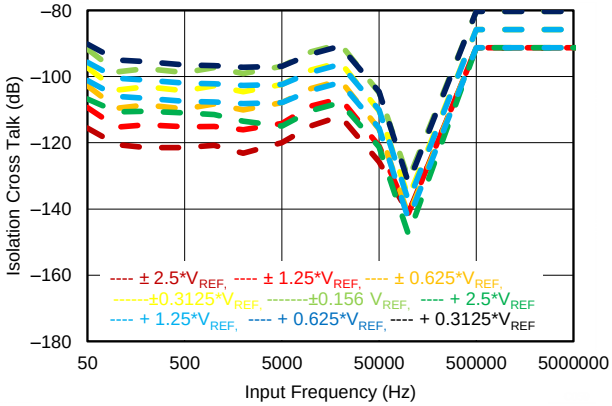

Figure 58. Isolation Crosstalk vs Frequency

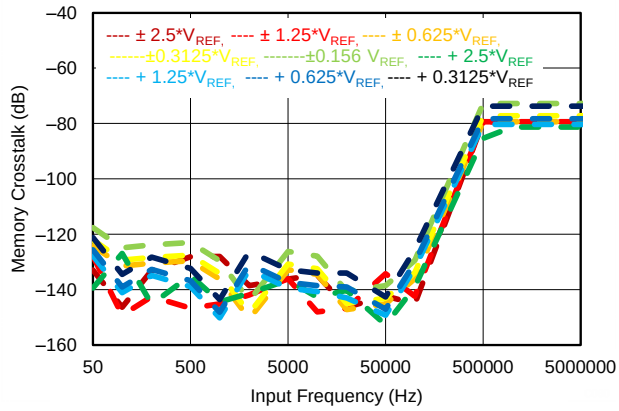

Input = 2 × maximum input voltage

Figure 59. Memory Crosstalk vs Frequency for Overrange Inputs

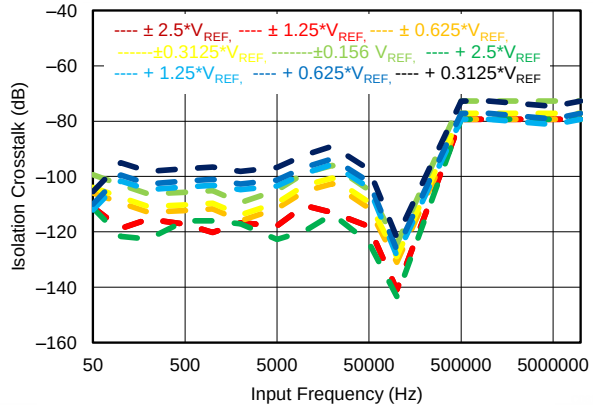

Input = 2 × maximum input voltage

Figure 60. Isolation Crosstalk vs Frequency for Overrange Inputs

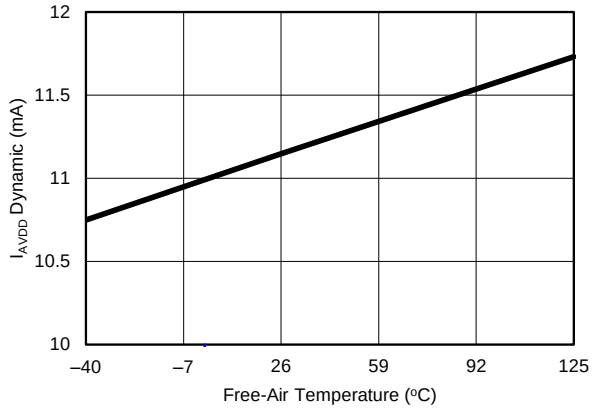

Figure 61. AVDD Current vs Temperature for the ADS8678 (f_S = 500 kSPS)

Copyright © 2015, Texas Instruments Incorporated

Typical Characteristics (continued)

At T_A = 25°C, AVDD = 5 V, DVDD = 3 V, internal reference V_{REF} = 4.096 V, and f_{SAMPLE} = 500 kSPS, unless otherwise noted.

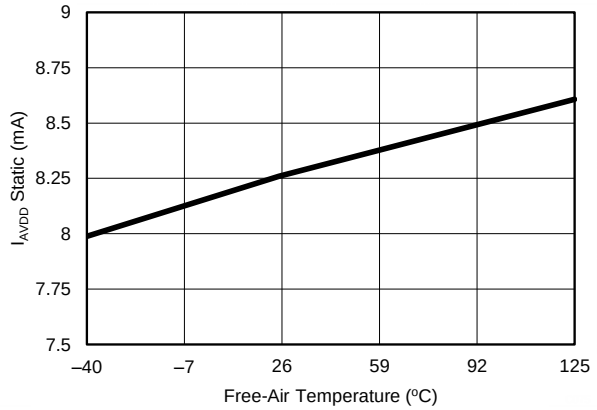

Figure 62. AVDD Current vs Temperature for the ADS8678 (During Sampling)

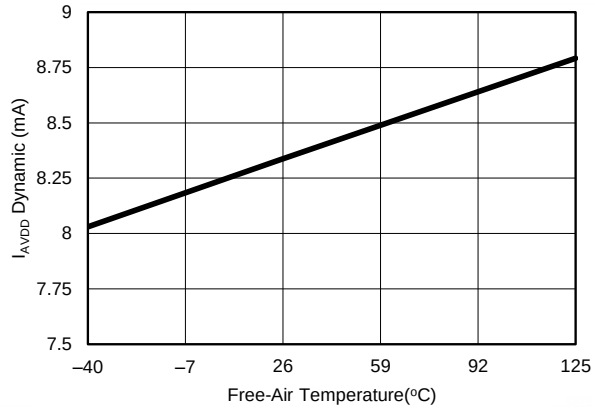

Figure 63. AVDD Current vs Temperature for the ADS8674 (f_S = 500 kSPS)

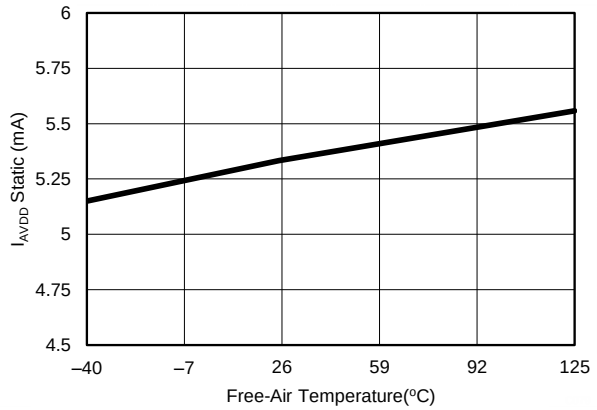

Figure 64. AVDD Current vs Temperature for the ADS8674 (During Sampling)

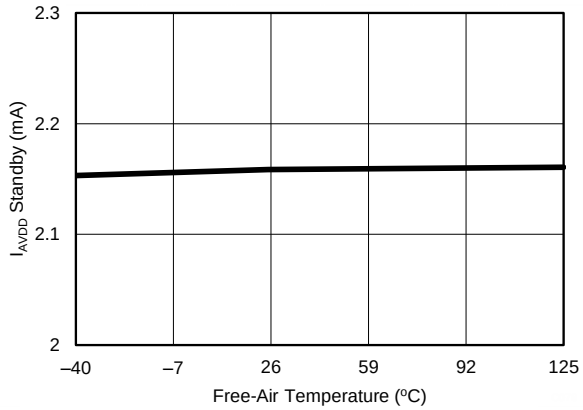

Figure 65. AVDD Current vs Temperature (STANDBY)

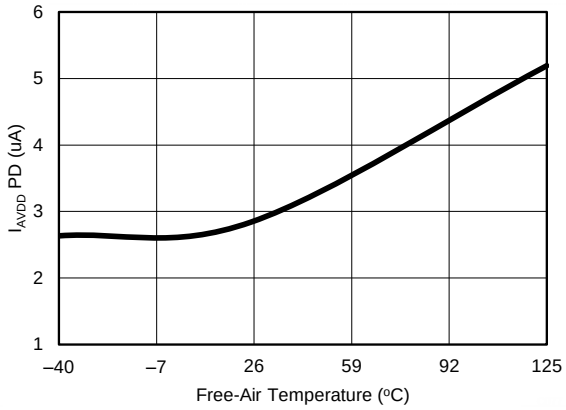

Figure 66. AVDD Current vs Temperature (Power Down)

8 Detailed Description

8.1 Overview

The ADS8674 and ADS8678 are 14-bit data acquisition systems with 4- and 8-channel analog inputs, respectively. Each analog input channel consists of an overvoltage protection circuit, a programmable gain amplifier (PGA), and a second-order, antialiasing filter that conditions the input signal before being fed into a 4- or 8-channel analog multiplexer (MUX). The output of the MUX is digitized using a 14-bit analog-to-digital converter (ADC), based on the successive approximation register (SAR) architecture. This overall system can achieve a maximum throughput of 500 kSPS, combined across all channels. The devices feature a 4.096-V internal reference with a fast-settling buffer and a simple SPI-compatible serial interface with daisy-chain (DAISY) and ALARM features.

The devices operate from a single 5-V analog supply and can accommodate true bipolar input signals up to ±2.5 × V_{REF}. The devices offer a constant 1-MΩ resistive input impedance irrespective of the sampling frequency or the selected input range. The integration of multichannel precision analog front-end circuits with high input impedance and a precision ADC operating from a single 5-V supply offers a simplified end solution without requiring external high-voltage bipolar supplies and complicated driver circuits.

8.2 Functional Block Diagram

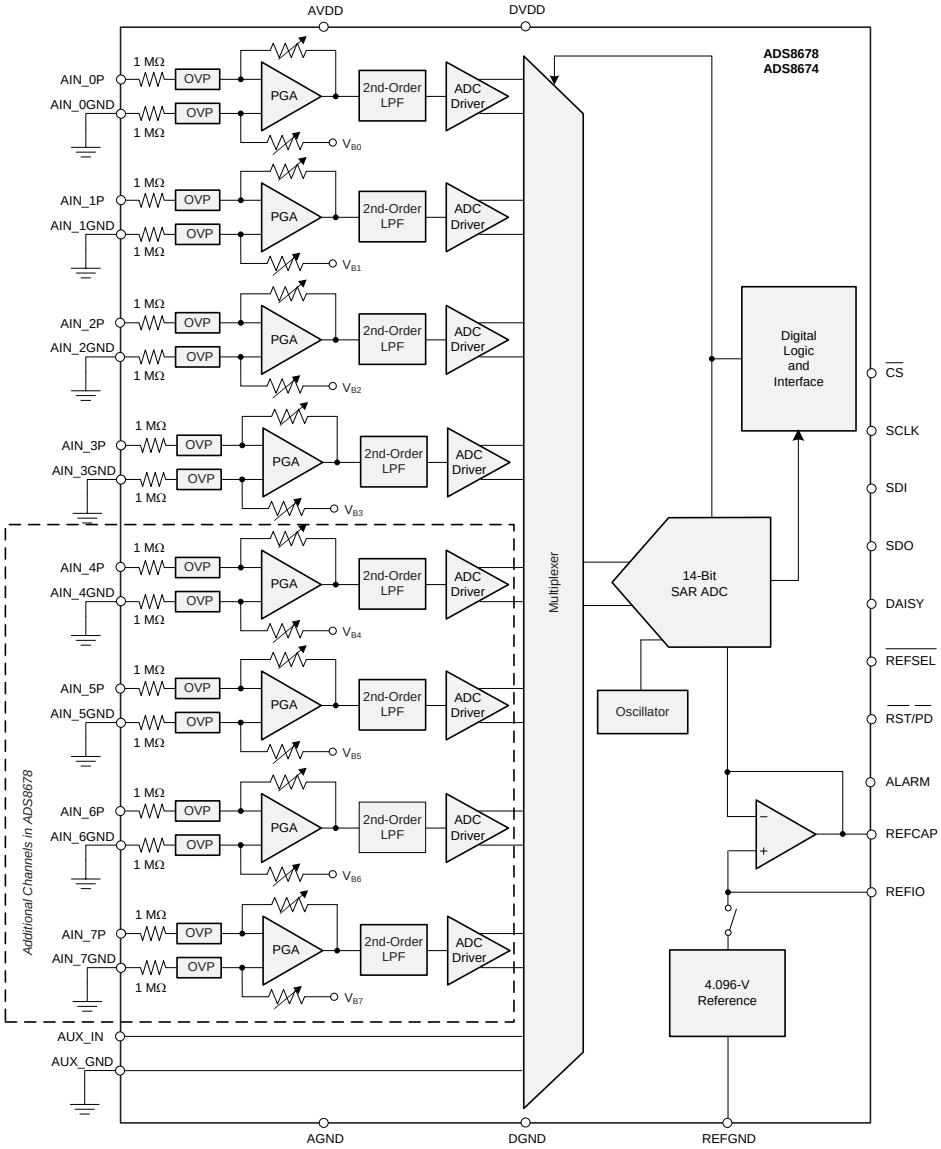

Copyright © 2015, Texas Instruments Incorporated

8.3 Feature Description

8.3.1 Analog Inputs

The ADS8674 and ADS8678 have either four or eight analog input channels, respectively, such that the positive inputs AIN_*n*P *(n = 0 to 3 or 7)* are the single-ended analog inputs and the negative inputs AIN_*n*GND are tied to GND. Figure 67 shows the simplified circuit schematic for each analog input channel, including the input overvoltage protection circuit, PGA, low-pass filter (LPF), high-speed ADC driver, and analog multiplexer.

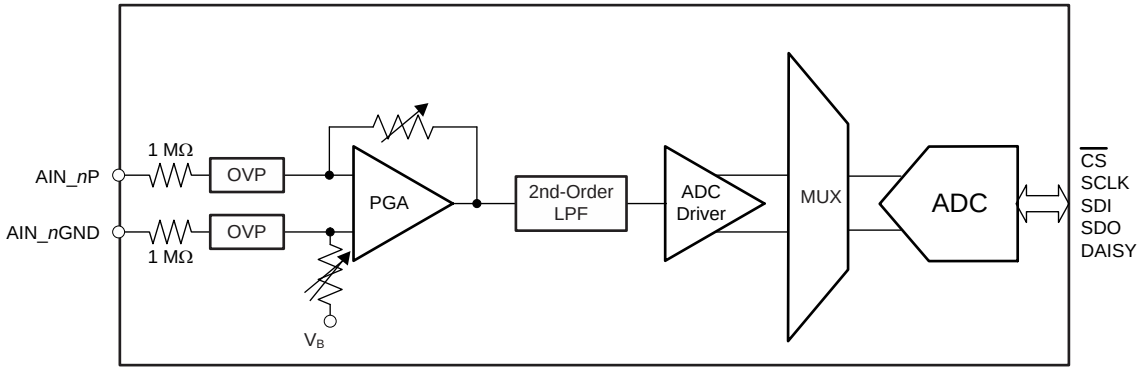

NOTE: n = 0 to 3 for the ADS8674 and n = 0 to 7 for the ADS8678.

Figure 67. Front-End Circuit Schematic for Each Analog Input Channel

The devices can support multiple unipolar or bipolar, single-ended input voltage ranges based on the configuration of the program registers. As explained in the *Range Select Registers* section, the input voltage range for each analog channel can be configured to bipolar ±2.5 × V_{REF}, ±1.25 × V_{REF}, ±0.625 × V_{REF}, ±0.3125 × V_{REF}, and ±0.15625 × V_{REF} or unipolar 0 to 2.5 × V_{REF}, 0 to 1.25 × V_{REF}, 0 to 0.625 × V_{REF}, and 0 to 0.3125 × V_{REF}. With the internal or external reference voltage set to 4.096 V, the input ranges of the device can be configured to bipolar ranges of ±10.24 V, ±5.12 V, ±2.56 V, ±1.28 V, and ±0.64 V or unipolar ranges of 0 V to 10.24 V, 0 V to 5.12 V, 0 V to 2.56 V, and 0 V to 1.28 V. Any of these input ranges can be assigned to any analog input channel of the device. For instance, the ±2.5 × V_{REF} range can be assigned to AIN_1P, the ±1.25 × V_{REF} range can be assigned to AIN_2P, the 0 V to 2.5 × V_{REF} range can be assigned to AIN_3P, and so forth.

The devices sample the voltage difference (AIN_*n*P – AIN_*n*GND) between the selected analog input channel and the AIN_*n*GND pin. The devices allow a ±0.1-V range on the AIN_*n*GND pin for all analog input channels. This feature is useful in modular systems where the sensor or signal-conditioning block is further away from the ADC on the board and when a difference in the ground potential of the sensor or signal conditioner from the ADC ground is possible. In such cases, running separate wires from the AIN_*n*GND pin of the device to the sensor or signal-conditioning ground is recommended.

If the analog input pins (AIN_*n*P) to the devices are left floating, the output of the ADC corresponds to an internal biasing voltage. The output from the ADC must be considered as invalid if the devices are operated with floating input pins. This condition does not cause any damage to the devices, which are fully functional when a valid input voltage is applied to the pins.

8.3.2 Analog Input Impedance

Each analog input channel in the device presents a constant resistive impedance of 1 MΩ. The input impedance is independent of either the ADC sampling frequency, the input signal frequency, or range. The primary advantage of such high-impedance inputs is the ease of driving the ADC inputs without requiring driving amplifiers with low output impedance. Bipolar, high-voltage power supplies are not required in the system because this ADC does not require any high-voltage front-end drivers. In most applications, the signal sources or sensor outputs can be directly connected to the ADC input, thus significantly simplifying the design of the signal chain.

In order to maintain the dc accuracy of the system, matching the external source impedance on the AIN_*n*P input pin with an equivalent resistance on the AIN_*n*GND pin is recommended. This matching helps to cancel any additional offset error contributed by the external resistance.

Feature Description (continued)

8.3.3 Input Overvoltage Protection Circuit

The ADS8674 and ADS8678 feature an internal overvoltage protection circuit on each of the four or eight analog input channels, respectively. Use these protection circuits as a secondary protection scheme to protect the device. Using external protection devices against surges, electrostatic discharge (ESD), and electrical fast transient (EFT) conditions is highly recommended. The conceptual block diagram of the internal overvoltage protection (OVP) circuit is shown in Figure 68.

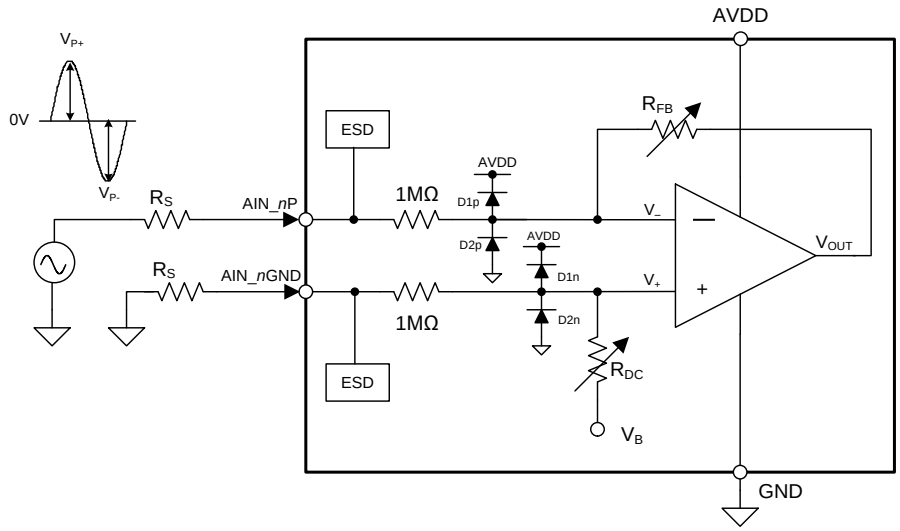

Figure 68. Input Overvoltage Protection Circuit Schematic

As shown in Figure 68, the combination of the 1-MΩ input resistors along with the PGA gain-setting resistors (R_{FB} and R_{DC}) limit the current flowing into the input pins. A combination of antiparallel diodes (D1 and D2) are added on each input pin to protect the internal circuitry and set the overvoltage protection limits.

Table 1 explains the various operating conditions for the device when the device is powered on. Table 1 indicates that when the AVDD pin of the device is connected to the proper supply voltage (AVDD = 5 V) or offers a low impedance of < 30 kΩ, the internal overvoltage protection circuit can withstand up to ±20 V on the analog input pins.

Table 1. Input Overvoltage Protection Limits When AVDD = 5 V or Offers a Low Impedance of < 30 kΩ(1)

INPUT CONDITION (V_{OVP} = ±20 V)		TEST CONDITION	ADC OUTPUT	COMMENTS
$\|V_{IN}\| < \|V_{RANGE}\|$	Within operating range	All input ranges	Valid	Device functions as per data sheet specifications
$\|V_{RANGE}\| < \|V_{IN}\| < \|V_{OVP}\|$	Beyond operating range but within overvoltage range	All input ranges	Saturated	ADC output is saturated, but device is internally protected (not recommended for extended time)
$\|V_{IN}\| > \|V_{OVP}\|$	Beyond overvoltage range	All input ranges	Saturated	This usage condition may cause irreversible damage to the device

(1) GND = 0, AIN_*n*GND = 0 V, $|V_{RANGE}|$ is the maximum input voltage for any selected input range, and $|V_{OVP}|$ is the break-down voltage for the internal OVP circuit. Assume that R_S is approximately 0.

The results indicated in Table 1 are based on an assumption that the analog input pins are driven by very low impedance sources (R_S is approximately 0). However, if the sources driving the inputs have higher impedance, the current flowing through the protection diodes reduces further, thereby increasing the OVP voltage range. Note that higher source impedance results in gain errors and contributes to overall system noise performance.

Copyright © 2015, Texas Instruments Incorporated

Figure 69 shows the voltage versus current response of the internal overvoltage protection circuit when the device is powered on. According to this current-to-voltage (I-V) response, the current flowing into the device input pins is limited by the 1-MΩ input impedance. However, for voltages beyond ±20 V, the internal node voltages surpass the break-down voltage for internal transistors, thus setting the limit for overvoltage protection on the input pins.

The same overvoltage protection circuit also provides protection to the device when the device is not powered on and AVDD is floating with an impedance > 30 kΩ. This condition can arise when the input signals are applied before the ADC is fully powered on. The overvoltage protection limits for this condition are shown in Table 2.

Table 2. Input Overvoltage Protection Limits When AVDD = Floating with Impedance > 30 kΩ (1)

INPUT CONDITION (V_{OVP} = ±11 V)		TEST CONDITION	ADC OUTPUT	COMMENTS
$\lvert V_{IN}\rvert < \lvert V_{OVP}\rvert$	Within overvoltage range	All input ranges	Invalid	Device is not functional but is protected internally by the OVP circuit.
$\lvert V_{IN}\rvert > \lvert V_{OVP}\rvert$	Beyond overvoltage range	All input ranges	Invalid	This usage condition may cause irreversible damage to the device.

(1) AVDD = floating, GND = 0, AIN_*n*GND = 0 V, $\lvert V_{RANGE}\rvert$ is the maximum input voltage for any selected input range, and $\lvert V_{OVP}\rvert$ is the break-down voltage for the internal OVP circuit. Assume that R_S is approximately 0.

Figure 70 shows the voltage versus current response of the internal overvoltage protection circuit when the device is not powered on. According to this I-V response, the current flowing into the device input pins is limited by the 1-MΩ input impedance. However, for voltages beyond ±11 V, the internal node voltages surpass the break-down voltage for internal transistors, thus setting the limit for overvoltage protection on the input pins.

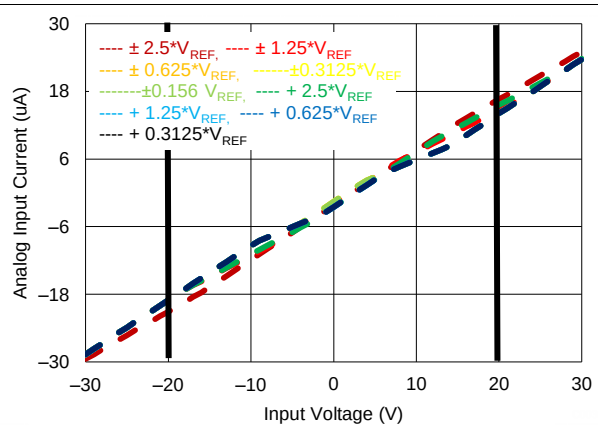

Figure 69. I-V Curve for an Input OVP Circuit

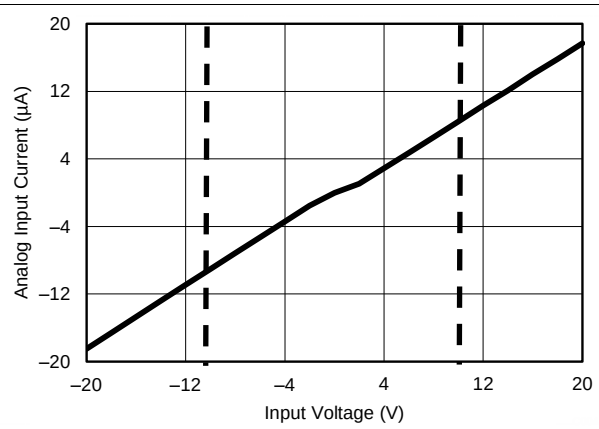

Figure 70. I-V Curve for an Input OVP Circuit (AVDD = Floating)

8.3.4 Programmable Gain Amplifier (PGA)

The devices offer a programmable gain amplifier (PGA) at each individual analog input channel, which converts the original single-ended input signal into a fully-differential signal to drive the internal 14-bit ADC. The PGA also adjusts the common-mode level of the input signal before being fed into the ADC to ensure maximum usage of the ADC input dynamic range. Depending on the range of the input signal, the PGA gain can be accordingly adjusted by setting the Range_CH*n*[3:0] *(n = 0 to 3 or 7)* bits in the program register. The default or power-on state for the Range_CH*n*[3:0] bits is 0000, which corresponds to an input signal range of ±2.5 × V_{REF}. Table 3 lists the various configurations of the Range_CH*n*[3:0] bits for the different analog input voltage ranges.

The PGA uses a very highly-matched network of resistors for multiple gain configurations. Matching between these resistors and the amplifiers across all channels is accurately trimmed to keep the overall gain error low across all channels and input ranges.

Table 3. Input Range Selection Bits Configuration

ANALOG INPUT RANGE	Range_CH*n*[3:0]			
	BIT 3	BIT 2	BIT 1	BIT 0
±2.5 × V_{REF}	0	0	0	0
±1.25 × V_{REF}	0	0	0	1
±0.625 × V_{REF}	0	0	1	0
±0.3125 × V_{REF}	0	0	1	1
±0.15625 × V_{REF}	1	0	1	1
0 to 2.5 × V_{REF}	0	1	0	1
0 to 1.25 × V_{REF}	0	1	1	0
0 to 0.625 × V_{REF}	0	1	1	1
0 to 0.3125 × V_{REF}	1	1	1	1

8.3.5 Second-Order, Low-Pass Filter (LPF)

In order to mitigate the noise of the front-end amplifiers and gain resistors of the PGA, each analog input channel of the ADS8674 and ADS8678 features a second-order, antialiasing LPF at the output of the PGA. The magnitude and phase response of the analog antialiasing filter are shown in Figure 71 and Figure 72, respectively. For maximum performance, the –3-dB cutoff frequency for the antialiasing filter is typically set to 15 kHz. The performance of the filter is consistent across all input ranges supported by the ADC.

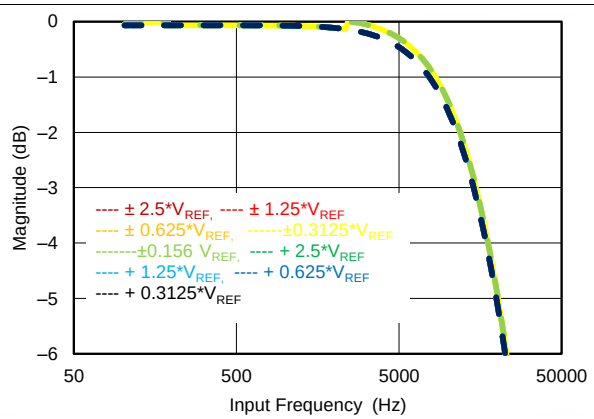

Figure 71. Second-Order LPF Magnitude Response

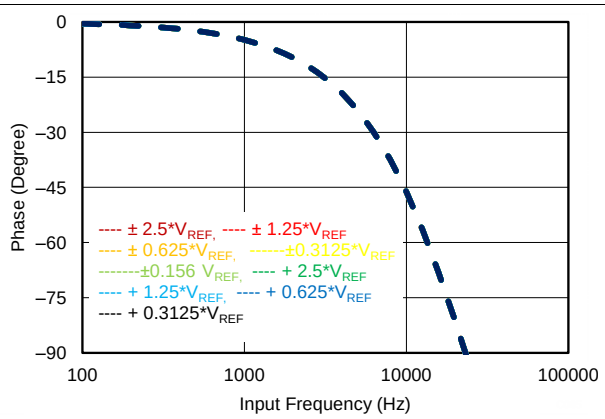

Figure 72. Second-Order LPF Phase Response

Copyright © 2015, Texas Instruments Incorporated

8.3.6 ADC Driver

In order to meet the performance of a 14-bit, SAR ADC at the maximum sampling rate (500 kSPS), the sample-and-hold capacitors at the input of the ADC must be successfully charged and discharged during the acquisition time window. This drive requirement at the inputs of the ADC necessitates the use of a high-bandwidth, low-noise, and stable amplifier buffer. Such an input driver is integrated in the front-end signal path of each analog input channel of the device. During transition from one channel of the multiplexer to another channel, the fast integrated driver ensures that the multiplexer output settles to a 14-bit accuracy within the acquisition time of the ADC, irrespective of the input levels on the respective channels.

8.3.7 Multiplexer (MUX)

The ADS8674 and ADS8678 feature an integrated 4- and 8-channel analog multiplexer, respectively. For each analog input channel, the voltage difference between the positive analog input AIN_*n*P and the negative ground input AIN_*n*GND is conditioned by the analog front-end circuitry before being fed into the multiplexer. The output of the multiplexer is directly sampled by the ADC. The multiplexer in the device can scan these analog inputs in either manual or auto-scan mode, as explained in the *Channel Sequencing Modes* section. In manual mode (MAN_Ch_n), the channel is selected for every sample via a register write; in auto-scan mode (AUTO_RST), the channel number is incremented automatically on every $\overline{CS}$ falling edge after the present channel is sampled. The analog inputs can be selected for an auto scan with register settings (see the *Auto-Scan Sequencing Control Registers* section). The devices automatically scan only the selected analog inputs in ascending order.

The maximum overall throughput for the ADS8674 and ADS8678 is specified at 500 kSPS across all channels. The per channel throughput is dependent on the number of channels selected in the multiplexer scanning sequence. For example, the throughput per channel is equal to 250 kSPS if only two channels are selected, but is equal to 125 kSPS per channel if four channels are selected (as in the ADS8674), and so forth.

See Table 6 for command register settings to switch between the auto-scan mode and manual mode for individual analog channels.

8.3.8 Reference

The ADS8674 and ADS8678 can operate with either an internal voltage reference or an external voltage reference using the internal buffer. The internal or external reference selection is determined by an external $\overline{REFSEL}$ pin. The devices have a built-in buffer amplifier to drive the actual reference input of the internal ADC core for maximizing performance.

8.3.8.1 Internal Reference

The devices have an internal 4.096-V (nominal value) reference. In order to select the internal reference, the REFSEL pin must be tied low or connected to AGND. When the internal reference is used, REFIO (pin 5) becomes an output pin with the internal reference value. Placing a 10-µF (minimum) decoupling capacitor between the REFIO pin and REFGND (pin 6) is recommended, as shown in Figure 73. The capacitor must be placed as close to the REFIO pin as possible. The output impedance of the internal band-gap circuit creates a low-pass filter with this capacitor to band-limit the noise of the reference. The use of a smaller capacitor value allows higher reference noise in the system, thus degrading SNR and SINAD performance. Do not use the REFIO pin to drive external ac or dc loads because REFIO has limited current output capability. The REFIO pin can be used as a source if followed by a suitable op amp buffer (such as the OPA320).

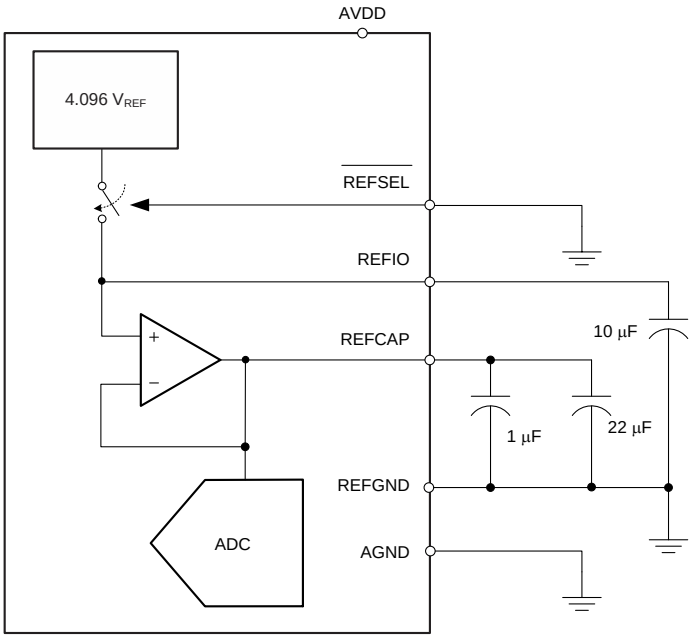

Figure 73. Device Connections for Using an Internal 4.096-V Reference

The device internal reference is trimmed to a maximum initial accuracy of ±1 mV. The histogram in Figure 74 shows the distribution of the internal voltage reference output taken from more than 3300 production devices.

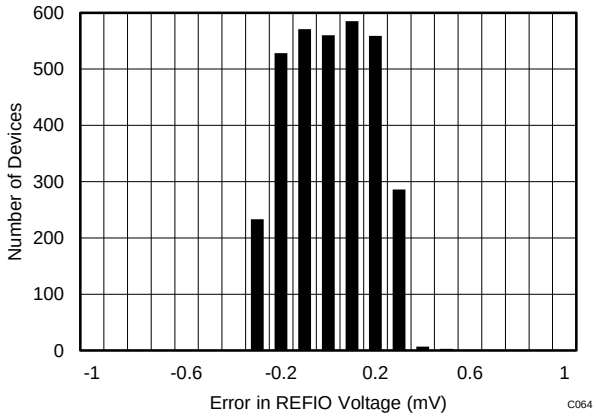

Figure 74. Internal Reference Accuracy at Room Temperature Histogram

Copyright © 2015, Texas Instruments Incorporated

The initial accuracy specification for the internal reference can be degraded if the die is exposed to any mechanical or thermal stress. Heating the device when being soldered to a PCB and any subsequent solder reflow is a primary cause for shifts in the V_{REF} value. The main cause of thermal hysteresis is a change in die stress and therefore is a function of the package, die-attach material, and molding compound, as well as the layout of the device itself.

In order to illustrate this effect, 80 devices were soldered using lead-free solder paste with the manufacturer's suggested reflow profile, as explained in application report SNOA550. The internal voltage reference output is measured before and after the reflow process and the typical shift in value is shown in Figure 75. Although all tested units exhibit a positive shift in their output voltages, negative shifts are also possible. Note that the histogram in Figure 75 shows the typical shift for exposure to a single reflow profile. Exposure to multiple reflows, which is common on PCBs with surface-mount components on both sides, causes additional shifts in the output voltage. If the PCB is to be exposed to multiple reflows, solder the ADS8674 and ADS8678 in the second pass to minimize device exposure to thermal stress.

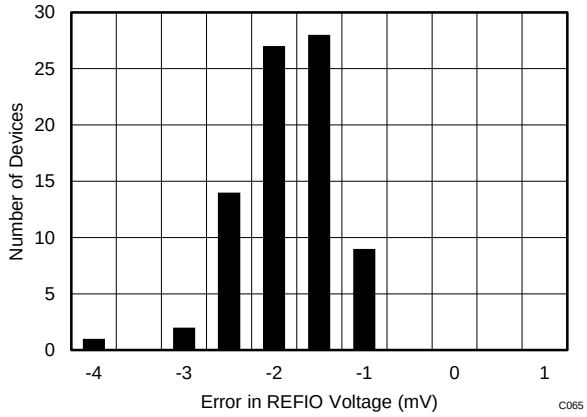

Figure 75. Solder Heat Shift Distribution Histogram

The internal reference is also temperature compensated to provide excellent temperature drift over an extended industrial temperature range of –40°C to 125°C. Figure 76 shows the variation of the internal reference voltage across temperature for different values of the AVDD supply voltage. The typical specified value of the reference voltage drift over temperature is 8 ppm/°C (Figure 77) and the maximum specified temperature drift is equal to 20 ppm/°C.

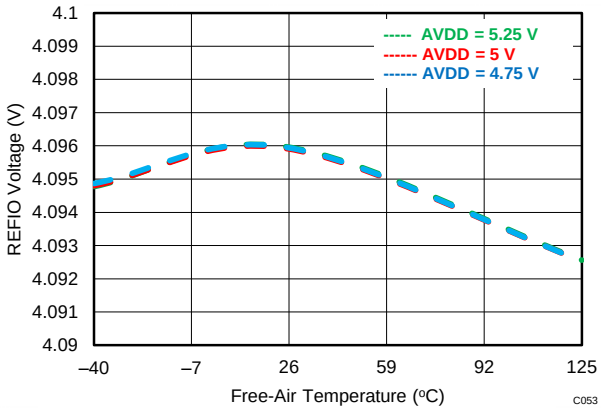

Figure 76. Variation of the Internal Reference Output (REFIO) Across Supply and Temperature

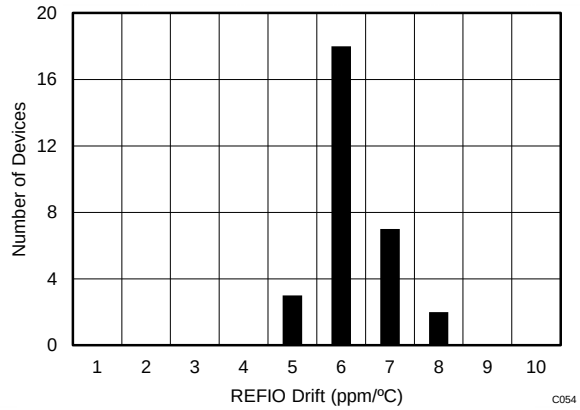

AVDD = 5 V, number of devices = 30, ΔT = –40°C to 125°C

Figure 77. Internal Reference Temperature Drift Histogram

8.3.8.2 External Reference

For applications that require a better reference voltage or a common reference voltage for multiple devices, the ADS8674 and ADS8678 offer a provision to use an external reference along with an internal buffer to drive the ADC reference pin. In order to select the external reference mode, either tie the $\overline{\text{REFSEL}}$ pin high or connect this pin to the DVDD supply. In this mode, an external 4.096-V reference must be applied at REFIO (pin 5), which becomes an input pin. Any low-power, low-drift, or small-size external reference can be used in this mode because the internal buffer is optimally designed to handle the dynamic loading on the REFCAP pin, which is internally connected to the ADC reference input. The output of the external reference must be appropriately filtered to minimize the resulting effect of the reference noise on system performance. A typical connection diagram for this mode is shown in Figure 78.

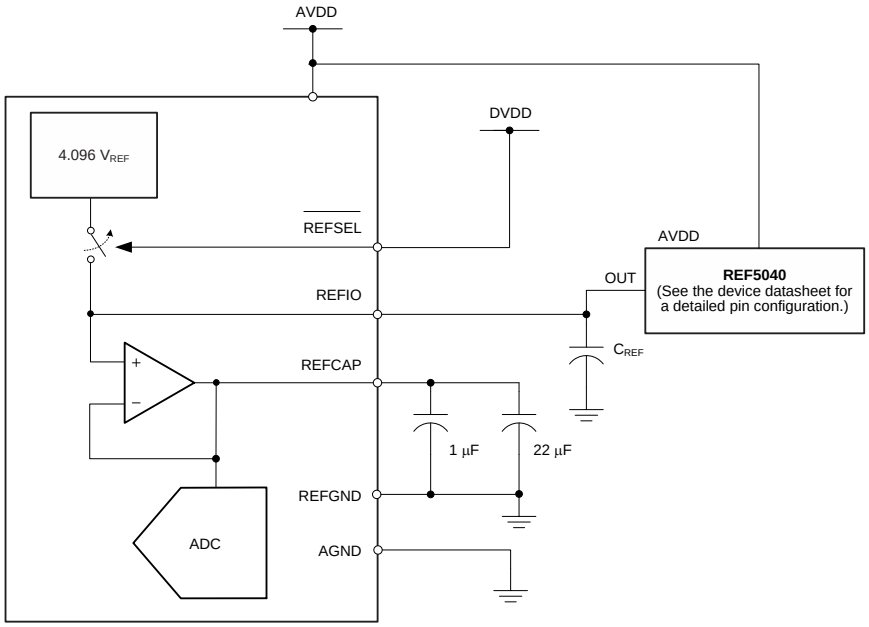

Figure 78. Device Connections for Using an External 4.096-V Reference

The output of the internal reference buffer appears at the REFCAP pin. A minimum capacitance of 10 µF must be placed between REFCAP (pin 7) and REFGND (pin 6). Place another capacitor of 1 µF as close to the REFCAP pin as possible for decoupling high-frequency signals. Do not use the internal buffer to drive external ac or dc loads because of the limited current output capability of this buffer.

Copyright © 2015, Texas Instruments Incorporated

The performance of the internal buffer output is very stable across the entire operating temperature range of –40°C to 125°C. Figure 79 shows the variation in the REFCAP output across temperature for different values of the AVDD supply voltage. The typical specified value of the reference buffer drift over temperature is 1 ppm/°C (Figure 80) and the maximum specified temperature drift is equal to 1.5 ppm/°C.

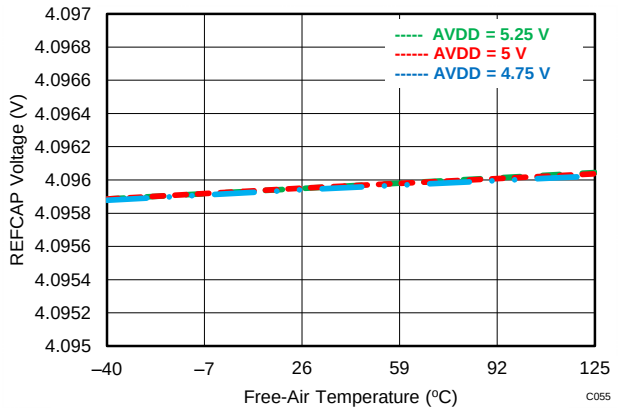

Figure 79. Variation of the Reference Buffer Output (REFCAP) vs Supply and Temperature

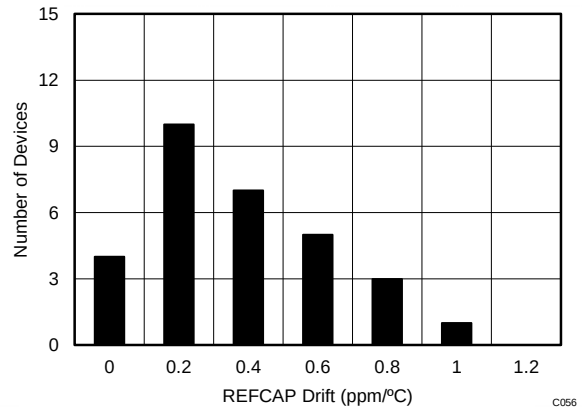

AVDD = 5 V, number of devices = 30, ΔT = –40°C to 125°C

Figure 80. Reference Buffer Temperature Drift Histogram

8.3.9 Auxiliary Channel

The devices include a single-ended auxiliary input channel (AUX_IN and AUX_GND). The AUX channel provides direct interface to an internal, high-precision, 14-bit ADC through the multiplexer because this channel does not include the front-end analog signal conditioning that the other analog input channels have. The AUX channel supports a single unipolar input range of 0 V to V_{REF} because there is no front-end PGA. The input signal on the AUX_IN pin can vary from 0 V to V_{REF}, whereas the AUX_GND pin must be tied to GND.

When a conversion is initiated, the voltage between these pins is sampled directly on an internal sampling capacitor (75 pF, typical). The input current required to charge the sampling capacitor is determined by several factors, including the sampling rate, input frequency, and source impedance. For slow applications that use a low-impedance source, the inputs of the AUX channel can be directly driven. When the throughput, input frequency, or the source impedance increases, a driving amplifier must be used at the input to achieve good ac performance from the AUX channel. Some key requirements of the driving amplifier are discussed in the *Input Driver for the AUX Channel* section.

The AUX channel in the ADS8674 and ADS8678 offers a true 14-bit performance with no missing codes. Some typical performance characteristics of the AUX channel are shown in Figure 81 to Figure 84.

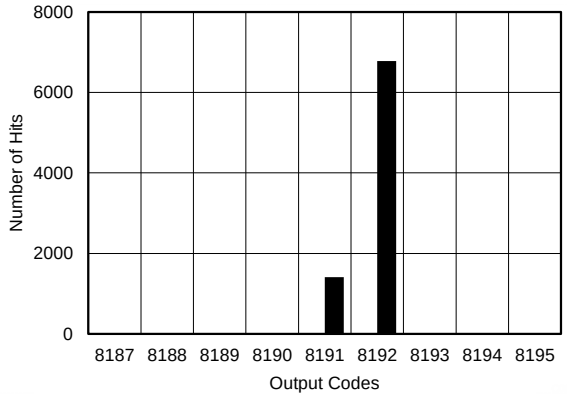

Mean = 8192.5, sigma = 0.32

Figure 81. DC Histogram for Mid-Scale Input (AUX Channel)

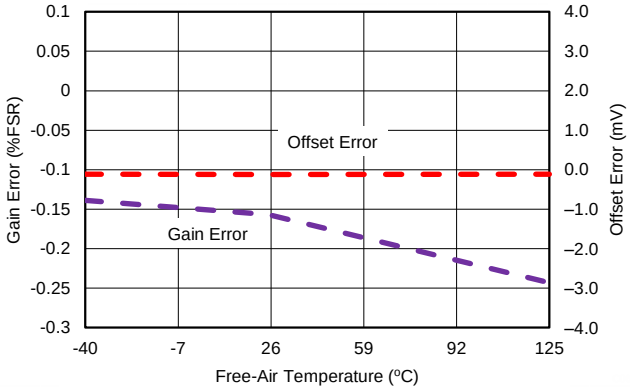

AUX channel

Figure 82. Offset and Gain vs Temperature (AUX Channel)

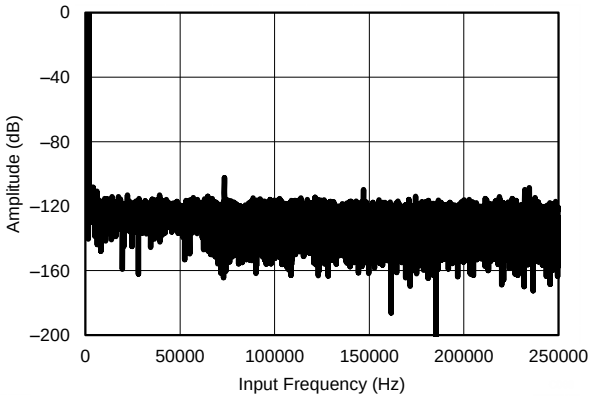

f_{IN} = 1 kHz, SNR = 84.44 dB, SINAD = 84.38 dB,
THD = –103.52 dB, SFDR = 108 dB, number of points = 64k

Figure 83. Typical FFT Plot (AUX Channel)

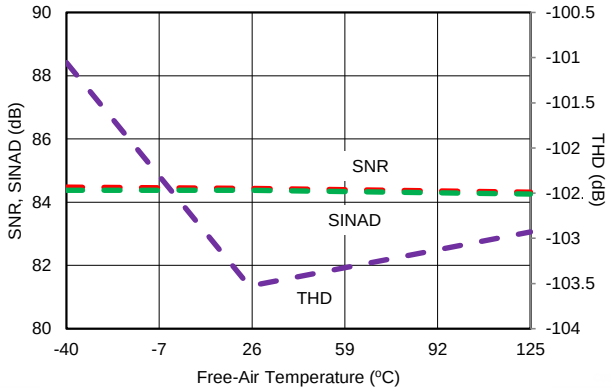

f_{IN} = 1 kHz

Figure 84. SNR, SINAD, and THD vs Temperature (AUX Channel)

Copyright © 2015, Texas Instruments Incorporated

8.3.9.1 Input Driver for the AUX Channel

For applications that use the AUX input channels at high throughput and high input frequency, a driving amplifier with low output impedance is required to meet the ac performance of the internal 14-bit ADC. Some key specifications of the input driving amplifier are discussed below:

- *Small-signal bandwidth.* The small-signal bandwidth of the input driving amplifier must be much higher than the bandwidth of the AUX input to ensure that there is no attenuation of the input signal resulting from the bandwidth limitation of the amplifier. In a typical data acquisition system, a low cut-off frequency, antialiasing filter is used at the inputs of a high-resolution ADC. The amplifier driving the antialiasing filter must have a low closed-loop output impedance for stability, thus implying a higher gain bandwidth for the amplifier. Higher small-signal bandwidth also minimizes the harmonic distortion at higher input frequencies. In general, the amplifier bandwidth requirements can be calculated on the basis of Equation 1.

  $$GBW \geq 4 \times f_{-3\,dB}$$

  where:

  - f_{-3dB} is the 3-dB bandwidth of the RC filter. (1)

- *Distortion.* In order to achieve the distortion performance of the AUX channel, the distortion of the input driver must be at least 10 dB lower than the specified distortion of the internal ADC, as shown in Equation 2.

  $$THD_{AMP} \leq THD_{ADC} - 10(dB) \quad (2)$$

- *Noise.* Careful considerations must be made to select a low-noise, front-end amplifier in order to prevent any degradation in SNR performance of the system. As a rule of thumb, to ensure that the noise performance of the data acquisition system is not limited by the front-end circuit, keep the total noise contribution from the front-end circuit below 20% of the input-referred noise of the ADC. Noise from the input driver circuit is band-limited by the low cut-off frequency of the input antialiasing filter, as explained in Equation 3.

$$N_G \times \sqrt{\left(\frac{V_{1/f_AMP_PP}}{6.6}\right)^2 + e_{n_RMS}^2 \times \frac{\pi}{2} \times f_{-3dB}} \leq \frac{1}{5} \times \frac{V_{FSR}}{2\sqrt{2}} \times 10^{-\frac{SNR(dB)}{20}}$$

where:

- $V_{1\,/\,f_AMP_PP}$ is the peak-to-peak flicker noise,
- e_{n_RMS} is the amplifier broadband noise density in nV/$\sqrt{Hz}$, and
- N_G is the noise gain of the front-end circuit, which is equal to 1 in a buffer configuration. (3)

8.3.10 ADC Transfer Function

The ADS8674 and ADS8678 are a family of multichannel devices that support single-ended, bipolar, and unipolar input ranges on all input channels. The output of the devices is in straight binary format for both bipolar and unipolar input ranges. The format for the output codes is the same across all analog channels.

The ideal transfer characteristic for each ADC channel for all input ranges is shown in Figure 85. The full-scale range (FSR) for each input signal is equal to the difference between the positive full-scale (PFS) input voltage and the negative full-scale (NFS) input voltage. The LSB size is equal to FSR / 2^{14} = FSR / 16384 because the resolution of the ADC is 14 bits. For a reference voltage of V_{REF} = 4.096 V, the LSB values corresponding to the different input ranges are listed in Table 4.

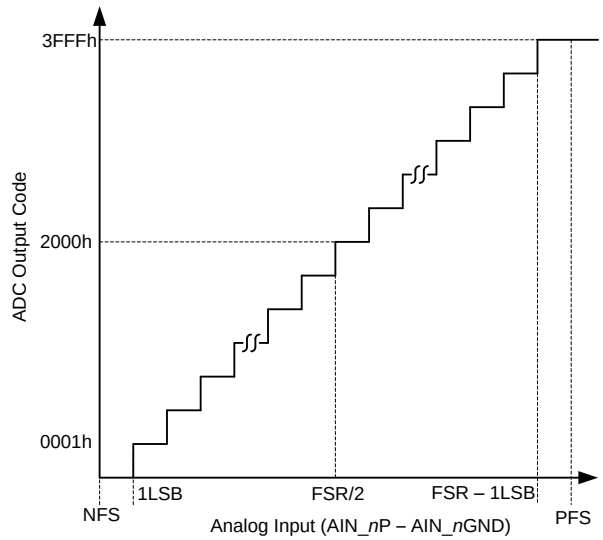

Figure 85. 14-Bit ADC Transfer Function (Straight-Binary Format)

Table 4. ADC LSB Values for Different Input Ranges (V_{REF} = 4.096 V)

INPUT RANGE	POSITIVE FULL-SCALE	NEGATIVE FULL-SCALE	FULL-SCALE RANGE	LSB (µV)
±2.5 × V_{REF}	10.24 V	–10.24 V	20.48 V	1250.00
±1.25 × V_{REF}	5.12 V	–5.12 V	10.24 V	625.00
±0.625 × V_{REF}	2.56 V	–2.56 V	5.12 V	312.50
±0.3125 × V_{REF}	1.28 V	–1.28 V	2.56 V	156.25
±0.15625 × V_{REF}	0.64 V	–0.64 V	1.28 V	78.125
0 to 2.5 × V_{REF}	10.24 V	0 V	10.24 V	625.00
0 to 1.25 × V_{REF}	5.12 V	0 V	5.12 V	312.50
0 to 0.625 × V_{REF}	2.56 V	0 V	2.56 V	156.25
0 to 0.3125 × V_{REF}	1.28 V	0 V	1.28 V	78.125

Copyright © 2015, Texas Instruments Incorporated

8.3.11 Alarm Feature

The devices have an active-high ALARM output on pin 35. The ALARM signal is synchronous and changes its state on the 16th falling edge of the SCLK signal. A high level on ALARM indicates that the alarm flag has tripped on one or more channels of the device. This pin can be wired to interrupt the host input. When an ALARM interrupt is received, the alarm flag registers are read to determine which channels have an alarm. The devices feature independently-programmable alarms for each channel. There are two alarms per channel (a low and a high alarm) and each alarm threshold has a separate hysteresis setting.

The ADS8674 and ADS8678 set a high alarm when the digital output for a particular channel exceeds the high alarm upper limit [high alarm threshold (T) + hysteresis (H)]. The alarm resets when the digital output for the channel is less than or equal to the high alarm lower limit (high alarm T – H – 2). This function is shown in Figure 86.

Similarly, the lower alarm is triggered when the digital output for a particular channel falls below the low alarm lower limit (low alarm threshold T – H – 1). The alarm resets when the digital output for the channel is greater than or equal to the low alarm higher limit (low alarm T + H + 1). This function is shown in Figure 87.

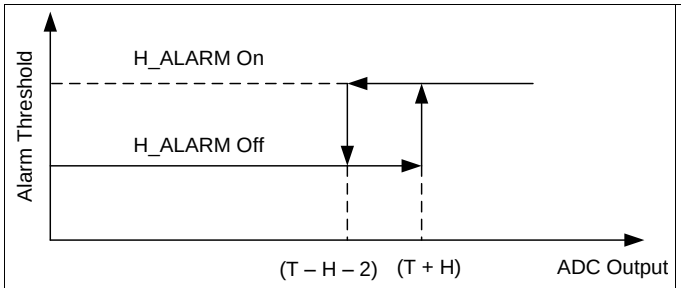

Figure 86. High-ALARM Hysteresis

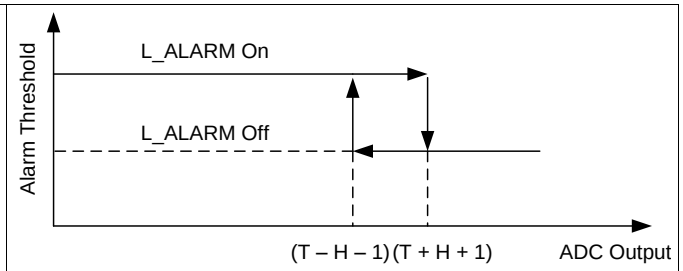

Figure 87. Low-ALARM Hysteresis

Figure 88 shows a functional block diagram for a single-channel alarm. There are two flags for each high and low alarm: active alarm flag and tripped alarm flag; see the *Alarm Flag Registers (Read-Only)* section for more details. The active alarm flag is triggered when an alarm condition is encountered for a particular channel; the active alarm flag resets when the alarm shuts off. A tripped alarm flag sets an alarm condition in the same manner as for an active alarm flag. However, the tripped alarm flag remains latched and resets only when the appropriate alarm flag register is read.

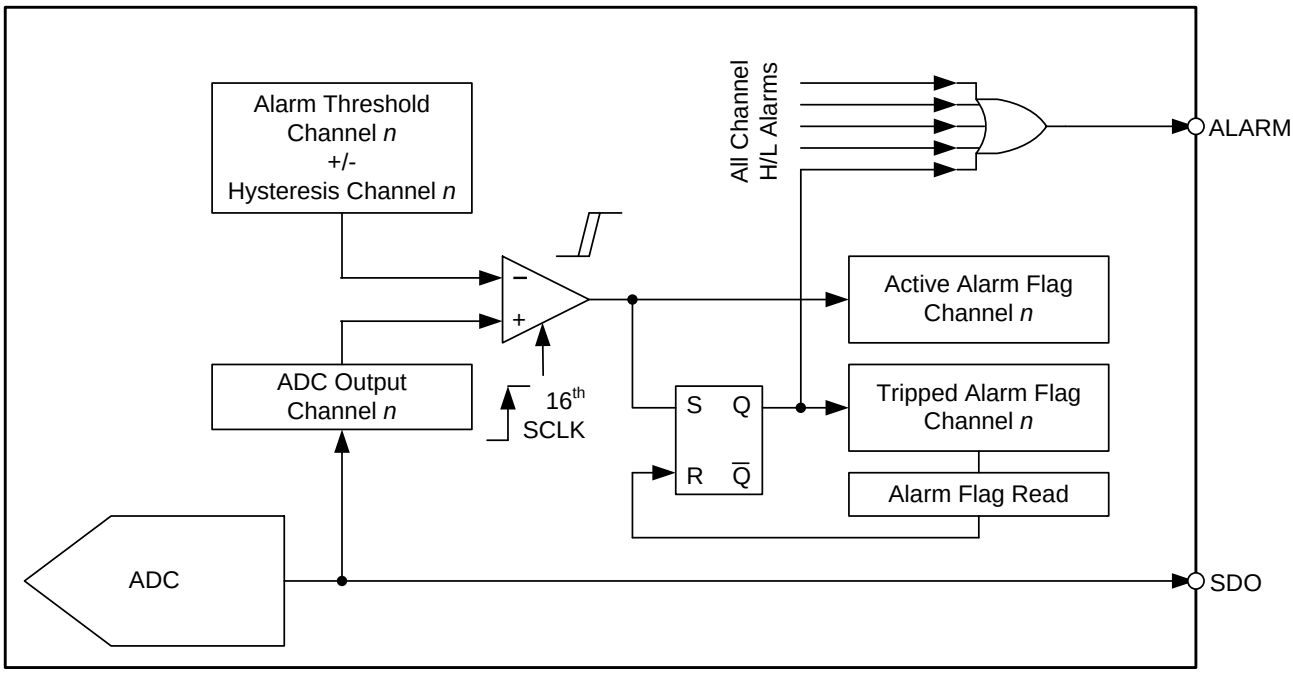

Figure 88. Alarm Functionality Schematic

8.4 Device Functional Modes

8.4.1 Device Interface

8.4.1.1 Digital Pin Description

The digital data interface for the ADS8674 and ADS8678 is shown in Figure 89.

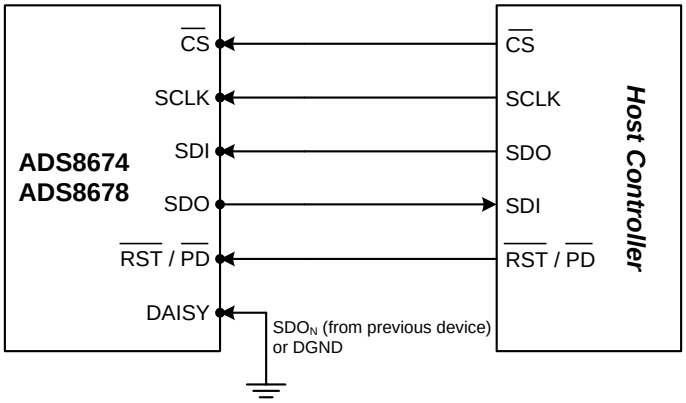

Figure 89. Pin Configuration for the Digital Interface

The signals shown in Figure 89 are summarized as follows:

8.4.1.1.1 $\overline{CS}$ (Input)

$\overline{CS}$ indicates an active-low, chip-select signal. $\overline{CS}$ is also used as a control signal to trigger a conversion on the falling edge. Each data frame begins with the falling edge of the $\overline{CS}$ signal. The analog input channel to be converted during a particular frame is selected in the previous frame. On the $\overline{CS}$ falling edge, the devices sample the input signal from the selected channel and a conversion is initiated using the internal clock. The device settings for the next data frame can be input during this conversion process. When the $\overline{CS}$ signal is high, the ADC is considered to be in an idle state.

8.4.1.1.2 SCLK (Input)

This pin indicates the external clock input for the data interface. All synchronous accesses to the device are timed with respect to the falling edges of the SCLK signal.

8.4.1.1.3 SDI (Input)

SDI is the serial data input line. SDI is used by the host processor to program the internal device registers for device configuration. At the beginning of each data frame, the $\overline{CS}$ signal goes low and the data on the SDI line are read by the device at every falling edge of the SCLK signal for the next 16 SCLK cycles. Any changes made to the device configuration in a particular data frame are applied to the device on the subsequent falling edge of the $\overline{CS}$ signal.

8.4.1.1.4 SDO (Output)

SDO is the serial data output line. SDO is used by the device to output conversion data. The size of the data output frame varies depending on the register setting for the SDO format; see Table 13. A low level on $\overline{CS}$ releases the SDO pin from the Hi-Z state. SDO is kept low for the first 15 SCLK falling edges. The MSB of the output data stream is clocked out on SDO on the 16th SCLK falling edge, followed by the subsequent data bits on every falling edge thereafter. The SDO line goes low after the entire data frame is output and goes to a Hi-Z state when $\overline{CS}$ goes high.

Copyright © 2015, Texas Instruments Incorporated

Device Functional Modes (continued)

8.4.1.1.5 DAISY (Input)

DAISY is a serial input pin. When multiple devices are connected in daisy-chain mode, as illustrated in Figure 92, the DAISY pin of the first device in the chain is connected to GND. The DAISY pin of every subsequent device is connected to the SDO output pin of the previous device, and the SDO output of the last device in the chain goes to the SDI of the host processor. If an application uses a stand-alone device, the DAISY pin is connected to GND.

8.4.1.1.6 $\overline{\text{RST}}/\overline{\text{PD}}$ (Input)

$\overline{\text{RST}}/\overline{\text{PD}}$ is a dual-function pin. Figure 90 shows the timing of this pin and Table 5 explains the usage of this pin.

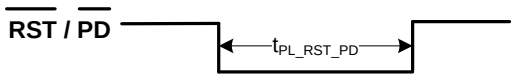

Figure 90. $\overline{\text{RST}}/\overline{\text{PD}}$ Pin Timing

Table 5. $\overline{\text{RST}}/\overline{\text{PD}}$ Pin Functionality

CONDITION	DEVICE MODE
40 ns < $t_{PL_RST_PD}$ ≤ 100 ns	The device is in RST mode and does not enter PWR_DN mode.
100 ns < $t_{PL_RST_PD}$ < 400 ns	The device is in RST mode and may or may not enter PWR_DN mode. NOTE: This setting is not recommended.
$t_{PL_RST_PD}$ ≥ 400 ns	The device enters PWR_DN mode and the program registers are reset to default value.

The devices can be placed into power-down (PWR_DN) mode by pulling the $\overline{\text{RST}}/\overline{\text{PD}}$ pin to a logic low state for at least 400 ns. The $\overline{\text{RST}}/\overline{\text{PD}}$ pin is asynchronous to the clock; thus, $\overline{\text{RST}}/\overline{\text{PD}}$ can be triggered at any time regardless of the status of other pins (including the analog input channels). When the device is in power-down mode, any activity on the digital input pins (apart from the $\overline{\text{RST}}/\overline{\text{PD}}$ pin) is ignored.

The program registers in the device can be reset to their default values (RST) by pulling the $\overline{\text{RST}}/\overline{\text{PD}}$ pin to a logic low state for no longer than 100 ns. This input is asynchronous to the clock. When $\overline{\text{RST}}/\overline{\text{PD}}$ is pulled back to a logic high state, the devices are placed in normal mode. One valid write operation must be executed on the program register in order to configure the device, followed by an appropriate command (AUTO_RST or MAN) to initiate conversions.

When the $\overline{\text{RST}}/\overline{\text{PD}}$ pin is pulled back to a logic high level, the devices wake-up in a default state in which the program registers are reset to their default values.

Copyright © 2015, Texas Instruments Incorporated

8.4.1.2 Data Acquisition Example

This section provides an example of how a host processor can use the device interface to configure the device internal registers as well as convert and acquire data for sampling a particular input channel. The timing diagram shown in Figure 91 provides further details.

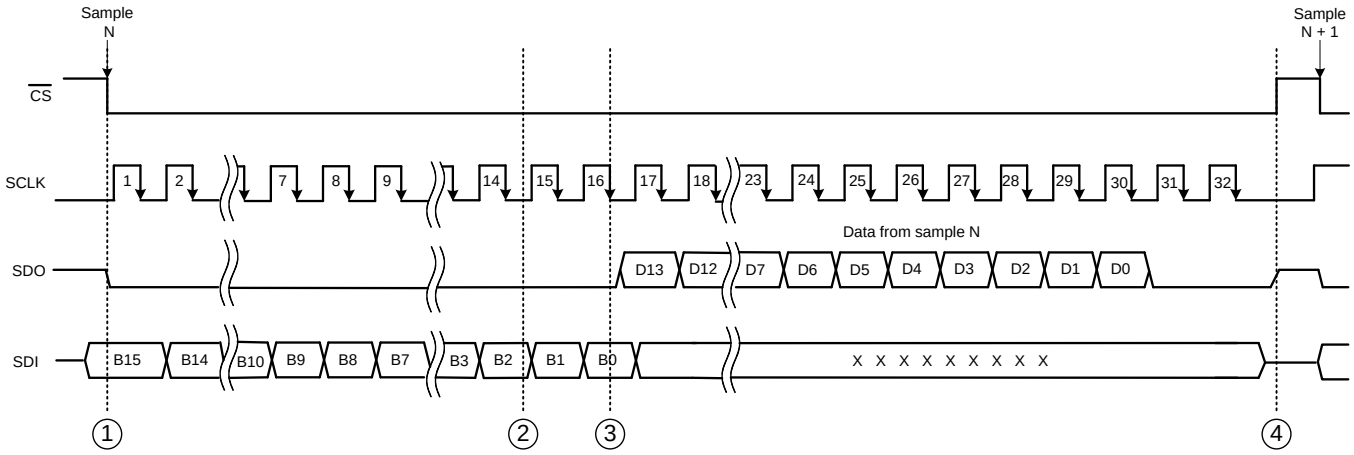

Figure 91. Device Operation Using the Serial Interface Timing Diagram

There are four events shown in Figure 91. These events are described below:

- ***Event 1:*** The host initiates a data conversion frame through a falling edge of the $\overline{CS}$ signal. The analog input signal at the instant of the $\overline{CS}$ falling edge is sampled by the ADC and conversion is performed using an internal oscillator clock. The analog input channel converted during this frame is selected in the previous data frame. The internal register settings of the device for the next conversion can be input during this data frame using the SDI and SCLK inputs. Initiate SCLK at this instant and latch data on the SDI line into the device on every SCLK falling edge for the next 16 SCLK cycles. At this instant, SDO goes low because the device does not output internal conversion data on the SDO line during the first 16 SCLK cycles.
- ***Event 2:*** During the first 16 SCLK cycles, the device completes the internal conversion process and data are now ready within the converter. However, the device does not output data bits on SDO until the 16th falling edge appears on the SCLK input. Because the ADC conversion time is fixed (the maximum value is given in the *Electrical Characteristics* table), the 16th SCLK falling edge must appear after the internal conversion is over, otherwise data output from the device is incorrect. Therefore, the SCLK frequency cannot exceed a maximum value, as provided in the *Timing Requirements: Serial Interface* table.
- ***Event 3:*** At the 16th falling edge of the SCLK signal, the device reads the LSB of the input word on the SDI line. The device does not read anything from the SDI line for the remaining data frame. On the same edge, the MSB of the conversion data is output on the SDO line and can be read by the host processor on the subsequent falling edge of the SCLK signal. For 14 bits of output data, the LSB can be read on the 30th SCLK falling edge. The SDO outputs 0 on subsequent SCLK falling edges until the next conversion is initiated.
- ***Event 4:*** When the internal data from the device is received, the host terminates the data frame by deactivating the $\overline{CS}$ signal to high. The SDO output goes into a Hi-Z state until the next data frame is initiated, as explained in Event 1.

8.4.1.3 Host-to-Device Connection Topologies

The digital interface of the ADS8674 and ADS8678 offers a lot of flexibility in the ways that a host controller can exchange data or commands with the device. A typical connection between a host controller and a stand-alone device is illustrated in Figure 89. However, there are applications that require multiple ADCs but the host controller has limited interfacing capability. This section describes two connection topologies that can be used to address the requirements of such applications.

Copyright © 2015, Texas Instruments Incorporated

8.4.1.3.1 Daisy-Chain Topology

A typical connection diagram showing multiple devices in daisy-chain mode is shown in Figure 92. The $\overline{CS}$, SCLK, and SDI inputs of all devices are connected together and controlled by a single $\overline{CS}$, SCLK, and SDO pin of the host controller, respectively. The $DAISY_1$ input pin of the first ADC in the chain is connected to DGND, the SDO_1 output pin is connected to the $DAISY_2$ input of ADC_2, and so forth. The SDO_N pin of the Nth ADC in the chain is connected to the SDI pin of the host controller. The devices do not require any special hardware or software configuration to enter daisy-chain mode.

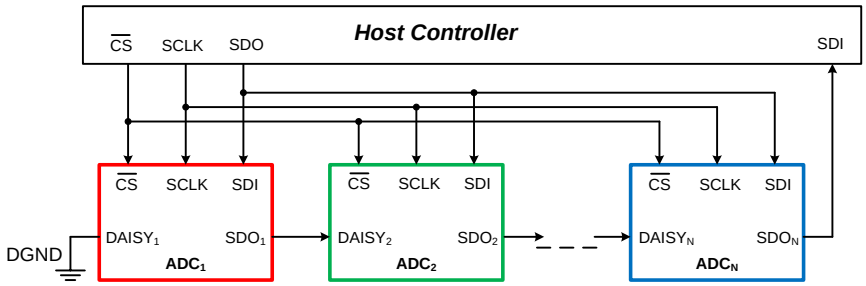

Figure 92. Daisy-Chain Connection Schematic

A typical timing diagram for three devices connected in daisy-chain mode is shown in Figure 93.

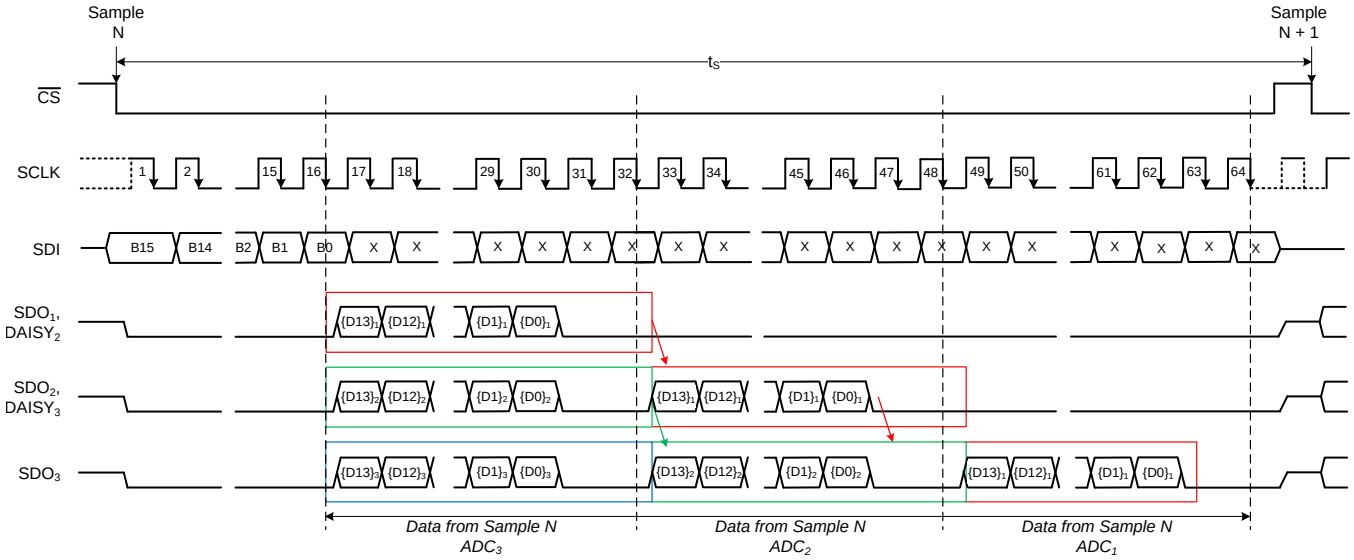

Figure 93. Three Devices Connected in Daisy-Chain Mode Timing Diagram

At the falling edge of the $\overline{CS}$ signal, all devices sample the input signal at their respective selected channels and enter into conversion phase. For the first 16 SCLK cycles, the internal register settings for the next conversion can be entered using the SDI line that is common to all devices in the chain. During this time period, the SDO outputs for all devices remain low. At the end of conversion, every ADC in the chain loads its own conversion result into an internal 16-bit shift register. For the 14-bit device, the internal shift register is loaded with 14 bits of output data followed by 00 in the LSB. At the 16th SCLK falling edge, every ADC in the chain outputs the MSB bit on its own SDO output pin. On every subsequent SCLK falling edge, the internal shift register of each ADC latches the data available on its DAISY pin and shifts out the next bit of data on its SDO pin. Therefore, the digital host receives the data of ADC_N, followed by the data of ADC_{N-1}, and so forth (in MSB-first fashion). In total, a minimum of 16 × N SCLK falling edges are required to capture the outputs of all N devices in the chain. This example uses three devices in a daisy-chain connection, so 3 × 16 = 48 SCLK cycles are required to capture the outputs of all devices in the chain along with the 16 SCLK cycles to input the register settings for the next conversion, resulting in a total of 64 SCLK cycles for the entire data frame. Note that the overall throughput of the system is proportionally reduced with the number of devices connected in a daisy-chain configuration.

The following points must be noted about the daisy-chain configuration illustrated in Figure 92:

- The SDI pins for all devices are connected together so each device operates with the same internal configuration. This limitation can be overcome by spending additional host controller resources to control the $\overline{CS}$ or SDI input of devices with unique configurations.
- If the number of devices connected in daisy-chain is more than four, loading increases on the shared output lines from the host controller ($\overline{CS}$, SDO, and SCLK). This increased loading can lead to digital timing errors. This limitation can be overcome by using digital buffers on the shared outputs from the host controller before feeding the shared digital lines into additional devices.

8.4.1.3.2 Star Topology

A typical connection diagram showing multiple devices in the star topology is shown in Figure 94. The SDI and SCLK inputs of all devices are connected together and are controlled by a single SDO and SCLK pin of the host controller, respectively. Similarly, the SDO outputs of all devices are tied together and connected to the SDI input pin of the host controller. The $\overline{CS}$ input pin of each device is individually controlled by separate $\overline{CS}$ control lines from the host controller.

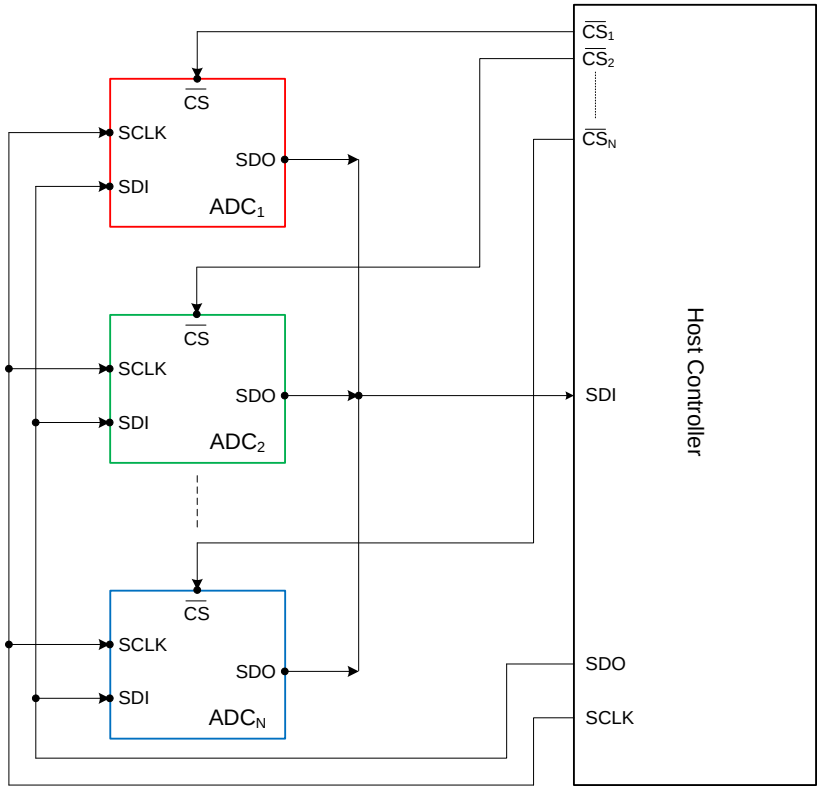

Figure 94. Star Topology Connection Schematic

The timing diagram for a typical data frame in the star topology is the same as in a stand-alone device operation, as illustrated in Figure 91. The data frame for a particular device starts with the falling edge of the $\overline{CS}$ signal and ends when the $\overline{CS}$ signal goes high. Because the host controller provides separate $\overline{CS}$ control signals for each device in this topology, the user can select the devices in any order and initiate a conversion by bringing down the $\overline{CS}$ signal for that particular device. As explained in Figure 91, when $\overline{CS}$ goes high at the end of each data frame, the SDO output of the device is placed into a Hi-Z state. Therefore, the shared SDO line in the star topology is controlled only by the device with an active data frame ($\overline{CS}$ is low). In order to avoid any conflict related to multiple devices driving the SDO line at the same time, ensure that the host controller pulls down the $\overline{CS}$ signal for only one device at any particular time.

TI recommends connecting a maximum of four devices in the star topology. Beyond that, loading may increase on the shared output lines from the host controller (SDO and SCLK). This loading can lead to digital timing errors. This limitation can be overcome by using digital buffers on the shared outputs from the host controller before being fed into additional devices.

Copyright © 2015, Texas Instruments Incorporated

8.4.2 Device Modes

The ADS8674 and ADS8678 support multiple modes of operation that are software programmable. After powering up, the device is placed into idle mode and does not perform any function until a command is received from the user. Table 6 lists all commands to enter the different modes of the device. After power-up, the program registers wake up with the default values and require appropriate configuration settings before performing any conversion. The diagram in Figure 95 explains how to switch the device from one mode of operation to another.

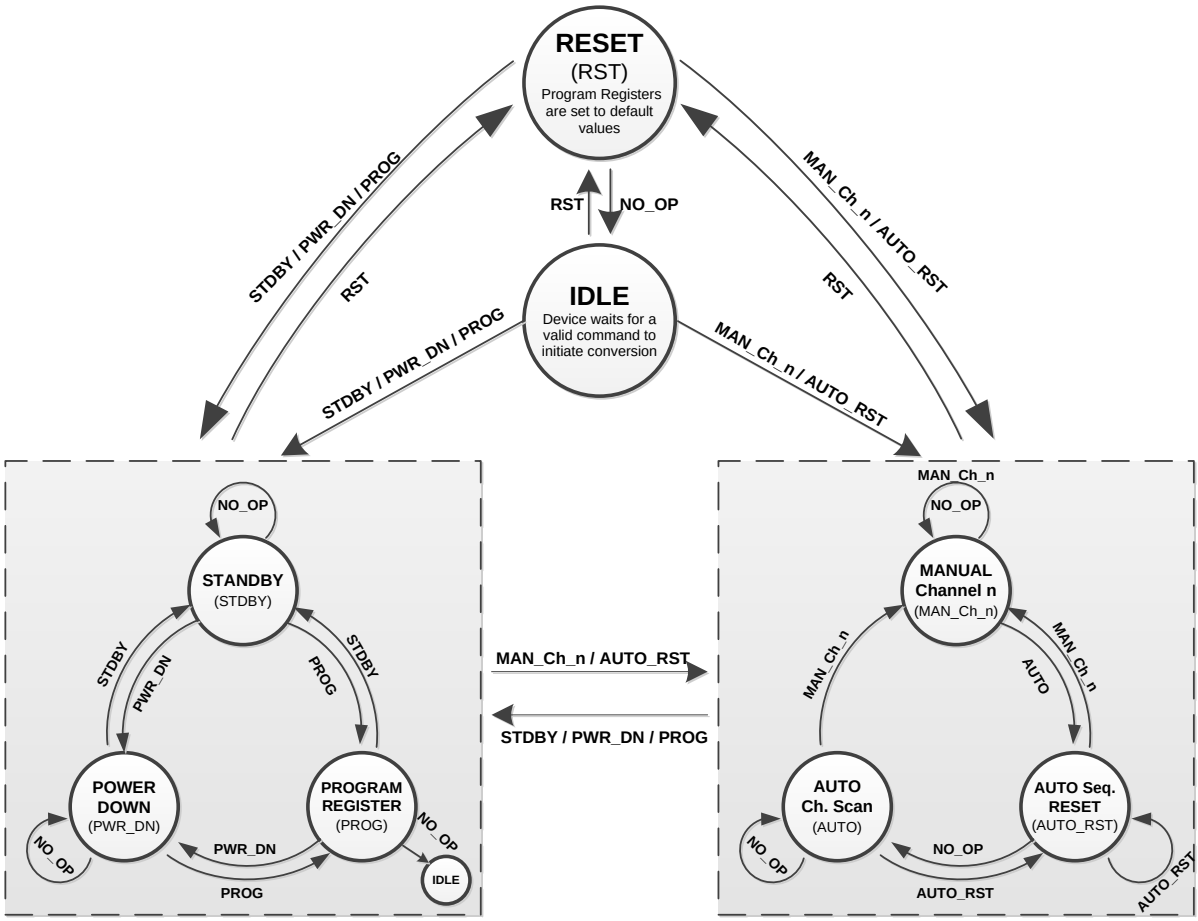

Figure 95. State Transition Diagram

8.4.2.1 Continued Operation in the Selected Mode (NO_OP)

Holding the SDI line low continuously (equivalent to writing a 0 to all 16 bits) during device operation continues device operation in the last selected mode (STDBY, PWR_DN, AUTO_RST, or MAN_Ch_n). In this mode, the device follows the same settings that are already configured in the program registers.

If a NO_OP condition occurs when the device is performing any read or write operation in the program register (PROG mode), then the device retains the current settings of the program registers. The device goes back to IDLE mode and waits for the user to enter a proper command to execute the program register read or write configuration.

8.4.2.2 Frame Abort Condition (FRAME_ABORT)

As explained in the *Data Acquisition Example* section, the device digital interface is designed such that each data frame starts with a falling edge of the $\overline{CS}$ signal. During the first 16 SCLK cycles, the device reads the 16-bit command word on the SDI line. The device waits to execute the command until the last bit of the command is received, which is latched on the 16th SCLK falling edge. During this operation, the $\overline{CS}$ signal must stay low. If the $\overline{CS}$ signal goes high for any reason before the data transmission is complete, the device goes into an INVALID state and waits for a proper command to be written. This condition is called the FRAME_ABORT condition. When the device is operating in this INVALID mode, any read operation on the device returns invalid data on the SDO line. The output of the ALARM pin will continue to reflect the status of input signal on the previously selected channel.

8.4.2.3 STANDBY Mode (STDBY)

The devices support a low-power standby mode (STDBY) in which only part of the circuit is powered down. The internal reference and buffer is not powered down, and therefore, the devices can be quickly powered up in 20 µs on exiting the STDBY mode. When the device comes out of STDBY mode, the program registers are not reset to the default values.

To enter STDBY mode, execute a valid write operation to the command register with a STDBY command of 8200h, as shown in Figure 96. The command is executed and the device enters STDBY mode on the next $\overline{CS}$ rising edge following this write operation. The device remains in STDBY mode if no valid conversion command (AUTO_RST or MAN_Ch_n) is executed and SDI remains low (see the *Continued Operation in the Selected Mode* section) during the subsequent data frames. When the device operates in STDBY mode, the program register settings can be updated (as explained in the *Program Register Read/Write Operation* section) using 16 SCLK cycles. However, if 32 complete SCLK cycles are provided, then the device returns invalid data on the SDO line because there is no ongoing conversion in STDBY mode. The program register read operation can take place normally during this mode.

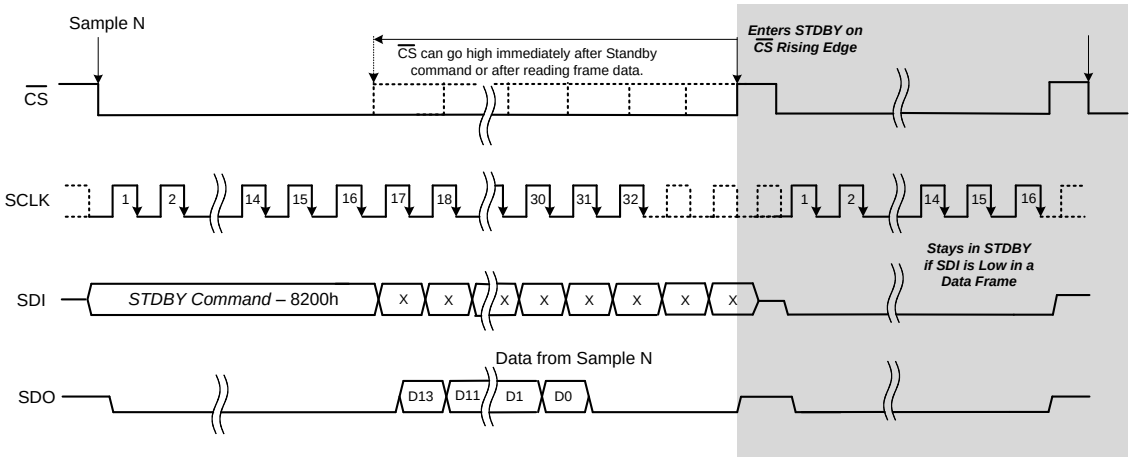

Figure 96. Enter and Remain in STDBY Mode Timing Diagram

Copyright © 2015, Texas Instruments Incorporated

In order to exit STDBY mode a valid 16-bit write command must be executed to enter auto (AUTO_RST) or manual (MAN_CH_n) scan mode, as shown in Figure 97. The device starts exiting STDBY mode on the next $\overline{CS}$ rising edge. At the next $\overline{CS}$ falling edge, the device samples the analog input at the channel selected by the MAN_CH_n command or the first channel of the AUTO_RST mode sequence. To ensure that the input signal is sampled correctly, keep the minimum width of the $\overline{CS}$ signal at 20 µs after exiting STDBY mode so the device internal circuitry can be fully powered up and biased properly before taking the sample. The data output for the selected channel can be read during the same data frame, as explained in Figure 91.

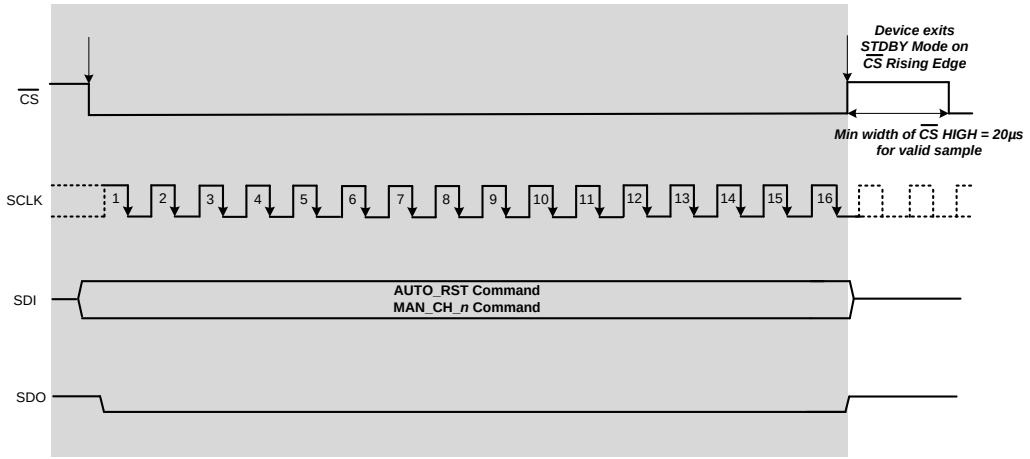

Figure 97. Exit STDBY Mode Timing Diagram

8.4.2.4 Power-Down Mode (PWR_DN)

The devices support a hardware and software power-down mode (PWR_DN) in which all internal circuitry is powered down, including the internal reference and buffer. A minimum time of 15 ms is required for the device to power up and convert the selected analog input channel after exiting PWR_DN mode, if the device is operating in the internal reference mode ($\overline{REFSEL}$ = 0). The hardware power mode for the device is explained in the ***RST/PD (Input)*** section. The primary difference between the hardware and software power-down modes is that the program registers are reset to default values when the devices wake up from hardware power-down, but the previous settings of the program registers are retained when the devices wake up from software power-down.

To enter PWR_DN mode using software, execute a valid write operation on the command register with a software PWR_DN command of 8300h, as shown in Figure 98. The command is executed and the device enters PWR_DN mode on the next $\overline{CS}$ rising edge following this write operation. The device remains in PWR_DN mode if no valid conversion command (AUTO_RST or MAN_Ch_n) is executed and SDI remains low (see the *Continued Operation in the Selected Mode* section) during the subsequent data frames. When the device operates in PWR_DN mode, the program register settings can be updated (as explained in the *Program Register Read/Write Operation* section) using 16 SCLK cycles. However, if 32 complete SCLK cycles are provided, then the device returns invalid data on the SDO line because there is no ongoing conversion in PWR_DN mode. The program register read operation can take place normally during this mode.

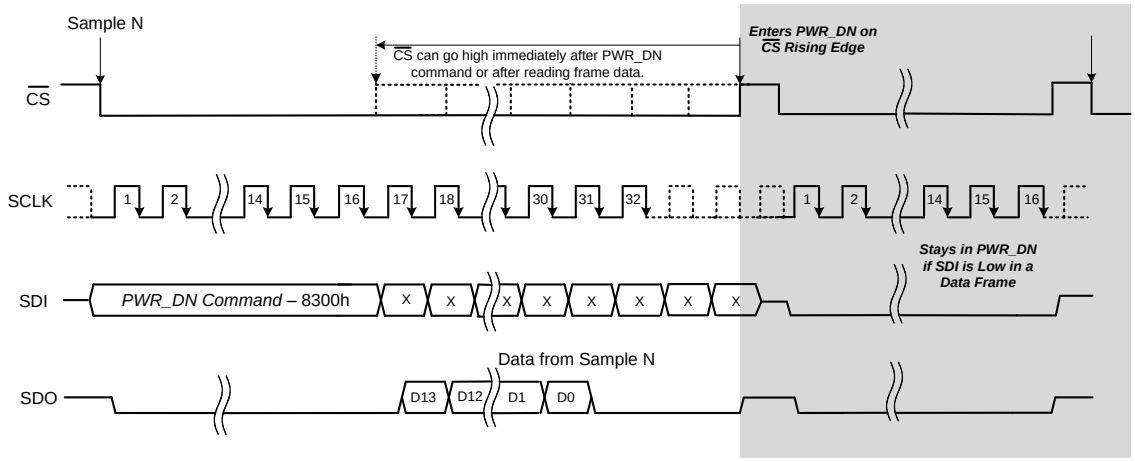

Figure 98. Enter and Remain in PWR_DN Mode Timing Diagram

In order to exit from PWR_DN mode a valid 16-bit write command must be executed, as shown in Figure 99. The device comes out of PWR_DN mode on the next $\overline{CS}$ rising edge. For operation in internal reference mode ($\overline{REFSEL}$ = 0), 15 ms are required for the device to power-up the reference and other internal circuits and settle to the required accuracy before valid conversion data are output for the selected input channel.

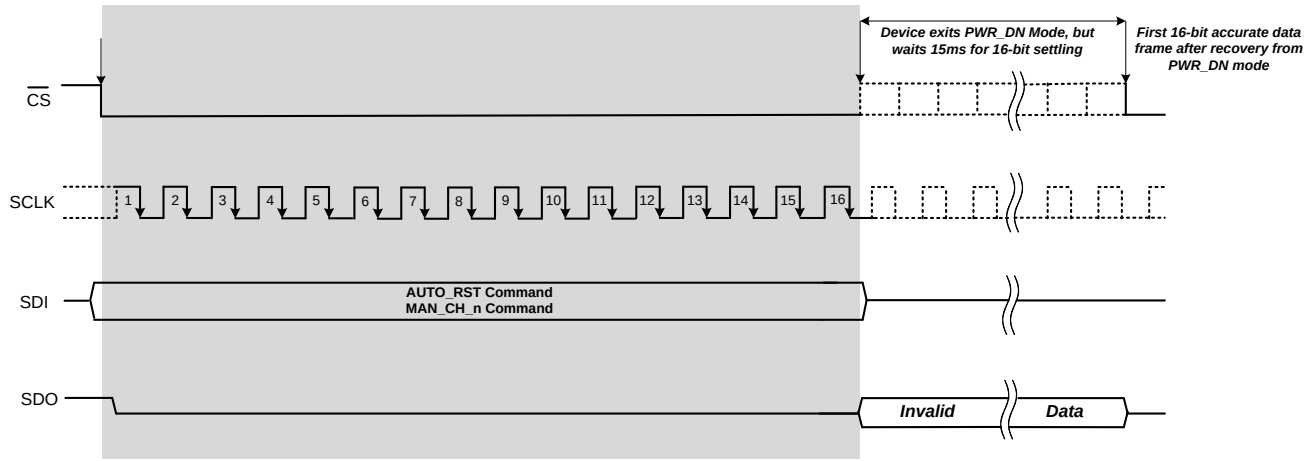

Figure 99. Exit PWR_DN Mode Timing Diagram

Copyright © 2015, Texas Instruments Incorporated

8.4.2.5 Auto Channel Enable with Reset (AUTO_RST)

The devices can be programmed to scan the input signal on all analog channels automatically by writing a valid auto channel sequence with a reset (AUTO_RST, A000h) command in the command register, as explained in Figure 100. As shown in Figure 100, the $\overline{CS}$ signal can be pulled high immediately after the AUTO_RST command or after reading the output data of the frame. However, in order to accurately acquire and convert the input signal on the first selected channel in the next data frame, the command frame must be a complete frame of 32 SCLK cycles.

The sequence of channels for the automatic scan can be configured by the AUTO SCAN sequencing control register (01h to 02h) in the program register; see the *Program Register Map* section. In this mode, the devices continuously cycle through the selected channels in ascending order, beginning with the lowest channel and converting all channels selected in the program register. On completion of the sequence, the devices return to the lowest count channel in the program register and repeat the sequence. The input voltage range for each channel in the auto-scan sequence can be configured by setting the *Range Select Registers* of the program registers.

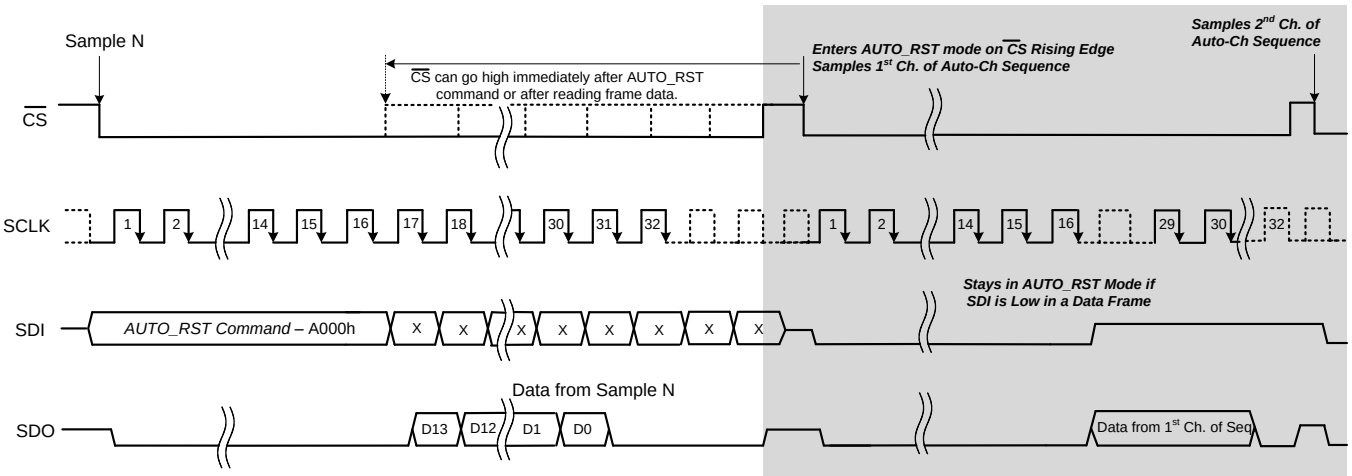

Figure 100. Enter AUTO_RST Mode Timing Diagram

The devices remain in AUTO_RST mode if no other valid command is executed and SDI is kept low (see the *Continued Operation in the Selected Mode (NO_OP)* section) during subsequent data frames. If the AUTO_RST command is executed again at any time during this mode of operation, then the sequence of the scanned channels is reset. The devices return to the lowest count channel of the auto-scan sequence in the program register and repeat the sequence. The timing diagram in Figure 101 shows this behavior using an example in which channels 0 to 2 are selected in the auto sequence. For switching between AUTO_RST mode and MAN_Ch_n mode; see the *Channel Sequencing Modes* section.

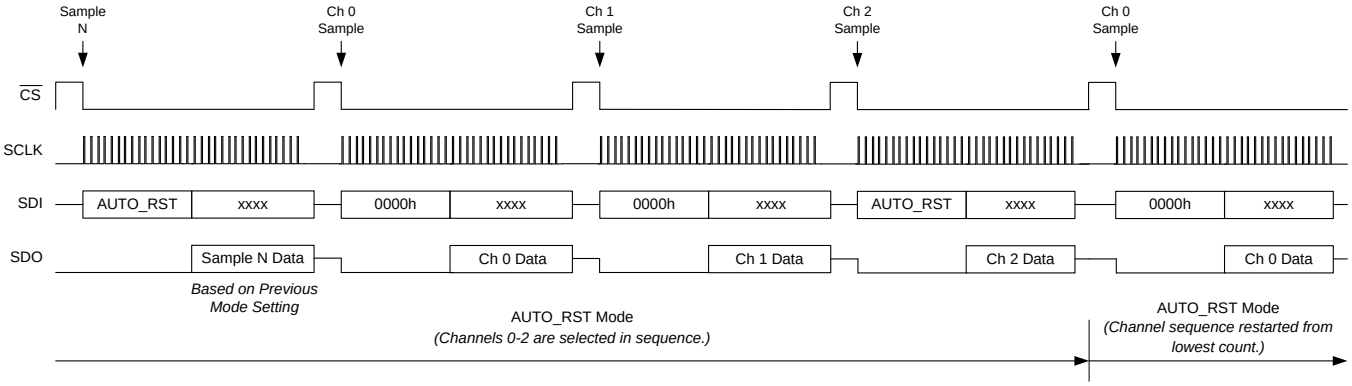

Figure 101. Device Operation Example in AUTO_RST Mode

8.4.2.6 Manual Channel n Select (MAN_Ch_n)

The devices can be programmed to convert a particular analog input channel by operating in manual channel *n* scan mode (MAN_Ch_n). This programming is done by writing a valid manual channel *n* select command (MAN_Ch_n) in the command register, as shown in Figure 102. As shown in Figure 102, the $\overline{CS}$ signal can be pulled high immediately after the MAN_Ch_n command or after reading the output data of the frame. However, in order to accurately acquire and convert the input signal on the next channel, the command frame must be a complete frame of 32 SCLK cycles. See Table 6 for a list of commands to select individual channels during MAN_Ch_n mode.

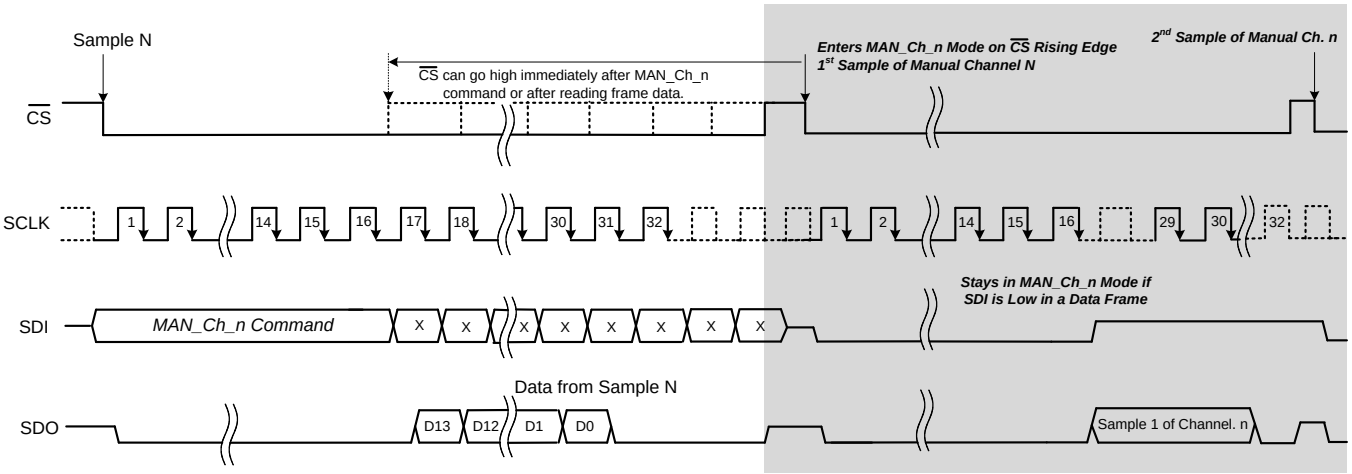

Figure 102. Enter MAN_Ch_*n* Scan Mode Timing Diagram

The manual channel *n* select command (MAN_Ch_n) is executed and the devices sample the analog input on the selected channel on the $\overline{CS}$ falling edge of the next data frame following this write operation. The input voltage range for each channel in the MAN_Ch_n mode can be configured by setting the *Range Select Registers* in the program registers. The device continues to sample the analog input on the same channel if no other valid command is executed and SDI is kept low (see the *Continued Operation in the Selected Mode (NO_OP)* section) during subsequent data frames. The timing diagram in Figure 103 shows this behavior using an example in which channel 1 is selected in the manual sequencing mode. For switching between MAN_Ch_n mode and AUTO_RST mode; see the *Channel Sequencing Modes* section.

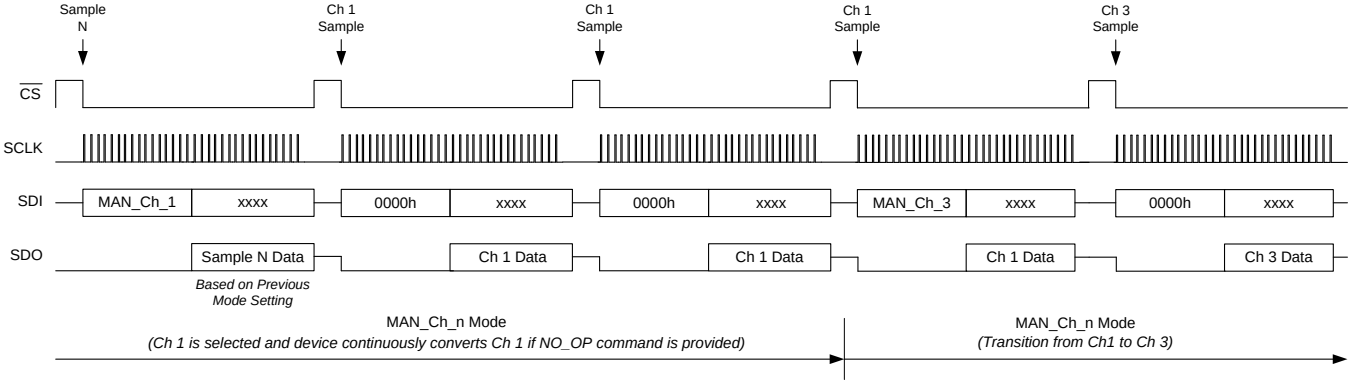

Figure 103. Device Operation in MAN_Ch_n Mode

Copyright © 2015, Texas Instruments Incorporated

8.4.2.7 Channel Sequencing Modes

The devices offer two channel sequencing modes: AUTO_RST and MAN_Ch_n.

In AUTO_RST mode, the channel number automatically increments in every subsequent frame. As explained in the *Auto-Scan Sequencing Control Registers* section, the analog inputs can be selected for an automatic scan with a register setting. The device automatically scans only the selected analog inputs in ascending order. The unselected analog input channels can also be powered down for optimizing power consumption in this mode of operation. The auto-mode sequence can be reset at any time during an automatic scan (using the AUTO_RST command). When the reset command is received, the ongoing auto-mode sequence is reset and restarts from the lowest selected channel in the sequence.

In MAN_Ch_n mode, the same input channel is selected during every data conversion frame. The input command words to select individual analog channels in MAN_Ch_n mode are listed in Table 6. If a particular input channel is selected during a data frame, then the analog inputs on the same channel are sampled during the next data frame. Figure 104 shows the SDI command sequence for transitions from AUTO_RST to MAN_Ch_n mode.

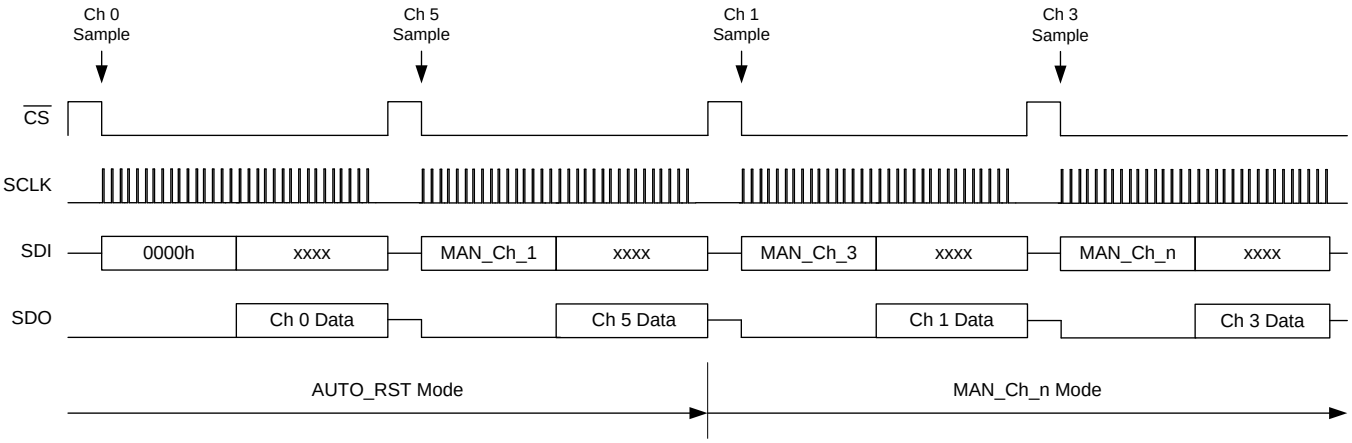

Figure 104. Transitioning from AUTO_RST to MAN_Ch_n Mode (Channels 0 and 5 are Selected for Auto Sequence)

Figure 105 shows the SDI command sequence for transitions from MAN_Ch_n to AUTO_RST mode. Note that each SDI command is executed on the next $\overline{CS}$ falling edge. A RST command can be issued at any instant during any channel sequencing mode, after which the device is placed into a default power-up state in the next data frame.

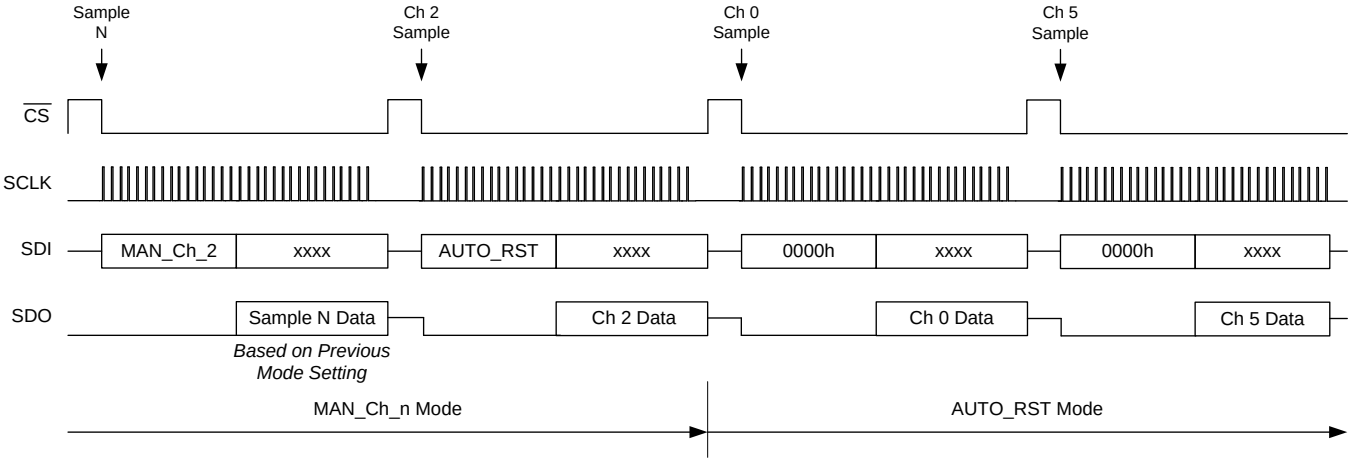

Figure 105. Transitioning from MAN_Ch_n to AUTO_RST Mode (Channels 0 and 5 are Selected for Auto Sequence)

8.4.2.8 Reset Program Registers (RST)

The devices support a hardware and software reset (RST) mode in which all program registers are reset to their default values. The devices can be put into RST mode using a hardware pin, as explained in the ***RST/PD (Input)*** section.

The device program registers can be reset to their default values during any data frame by executing a valid write operation on the command register with a RST command of 8500h, as shown in Figure 106. The device remains in RST mode if no valid conversion command (AUTO_RST or MAN_Ch_n) is executed and SDI remains low (see the *Continued Operation in the Selected Mode (NO_OP)* section) during the subsequent data frames. When the device operates in RST mode, the program register settings can be updated (as explained in the *Program Register Read/Write Operation* section) using 16 SCLK cycles. However, if 32 complete SCLK cycles are provided, then the device returns invalid data on the SDO line because there is no ongoing conversion in RST mode. The values of the program register can be read normally during this mode. A valid AUTO_RST or MAN_CH_n channel selection command must be executed for initiating a conversion on a particular analog channel using the default program register settings.

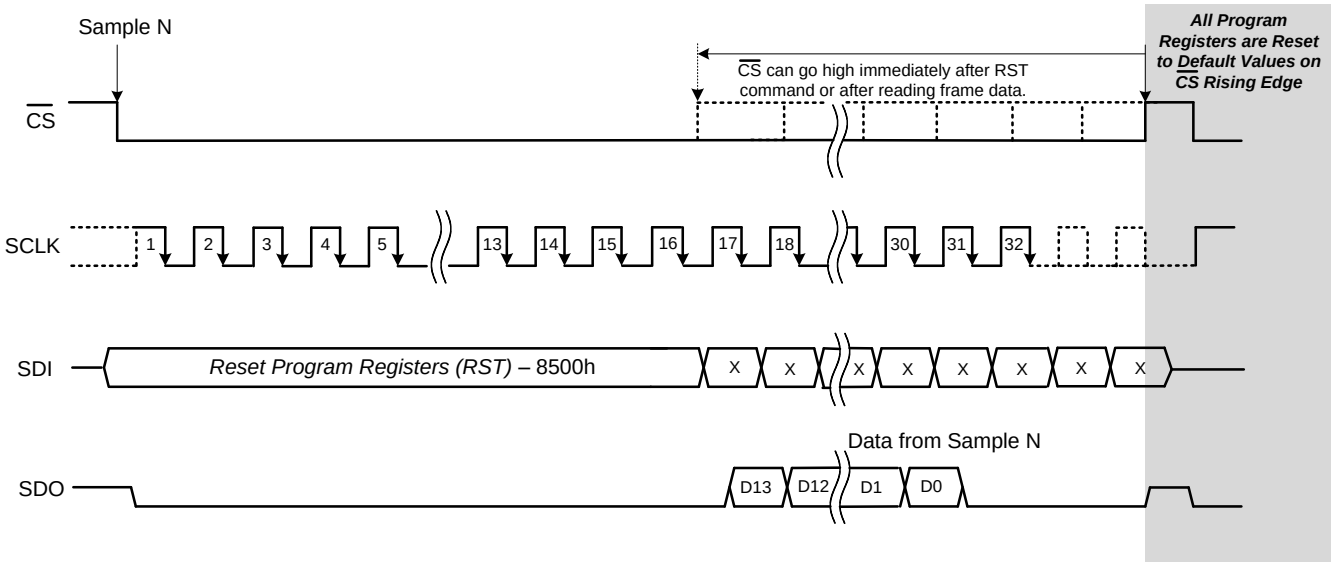

Figure 106. Reset Program Registers (RST) Timing Diagram

Copyright © 2015, Texas Instruments Incorporated

8.5 Register Maps

The internal registers of the ADS8674 and ADS8678 are categorized into two categories: command registers and program registers.

The command registers are used to select the channel sequencing mode (AUTO_RST or MAN_Ch_n), configure the device in standby (STDBY) or power-down (PWR_DN) mode, and reset (RST) the program registers to their default values.

The program registers are used to select the sequence of channels for AUTO_RST mode, select the SDO output format, control input range settings for individual channels, control the ALARM feature, reading the alarm flags, and programming the alarm thresholds for each channel.

8.5.1 Command Register Description

The command register is a 16-bit, write-only register that is used to set the operating modes of the ADS8674 and ADS8678. The settings in this register are used to select the channel sequencing mode (AUTO_RST or MAN_Ch_n), configure the device in standby (STDBY) or power-down (PWR_DN) mode, and reset (RST) the program registers to their default values. All command settings for this register are listed in Table 6. During power-up or reset, the default content of the command register is all 0's and the device waits for a command to be written before being placed into any mode of operation. See Figure 1 for a typical timing diagram for writing a 16-bit command into the device. The device executes the command at the end of this particular data frame when the $\overline{CS}$ signal goes high.

Table 6. Command Register Map

REGISTER	MSB BYTE								LSB BYTE	COMMAND (Hex)	OPERATION IN NEXT FRAME
	B15	B14	B13	B12	B11	B10	B9	B8	B[7:0]		
Continued Operation (NO_OP)	0	0	0	0	0	0	0	0	0000 0000	0000h	Continue operation in previous mode
Standby (STDBY)	1	0	0	0	0	0	1	0	0000 0000	8200h	Device is placed into standby mode
Power Down (PWR_DN)	1	0	0	0	0	0	1	1	0000 0000	8300h	Device is powered down
Reset program registers (RST)	1	0	0	0	0	1	0	1	0000 0000	8500h	Program register is reset to default
Auto Ch. Sequence with Reset (AUTO_RST)	1	0	1	0	0	0	0	0	0000 0000	A000h	Auto mode enabled following a reset
Manual Ch 0 Selection (MAN_Ch_0)	1	1	0	0	0	0	0	0	0000 0000	C000h	Channel 0 input is selected
Manual Ch 1 Selection (MAN_Ch_1)	1	1	0	0	0	1	0	0	0000 0000	C400h	Channel 1 input is selected
Manual Ch 2 Selection (MAN_Ch_2)	1	1	0	0	1	0	0	0	0000 0000	C800h	Channel 2 input is selected
Manual Ch 3 Selection (MAN_Ch_3)	1	1	0	0	1	1	0	0	0000 0000	CC00h	Channel 3 input is selected
Manual Ch 4 Selection (MAN_Ch_4)(1)	1	1	0	1	0	0	0	0	0000 0000	D000h	Channel 4 input is selected
Manual Ch 5 Selection (MAN_Ch_5)	1	1	0	1	0	1	0	0	0000 0000	D400h	Channel 5 input is selected
Manual Ch 6 Selection (MAN_Ch_6)	1	1	0	1	1	0	0	0	0000 0000	D800h	Channel 6 input is selected
Manual Ch 7 Selection (MAN_Ch_7)	1	1	0	1	1	1	0	0	0000 0000	DC00h	Channel 7 input is selected
Manual AUX Selection (MAN_AUX)	1	1	1	0	0	0	0	0	0000 0000	E000h	AUX channel input is selected

(1) Shading indicates bits or registers not included in the 4-channel version of the device.

8.5.2 Program Register Description

The program register is a 16-bit register used to set the operating modes of the ADS8674 and ADS8678. The settings in this register are used to select the channel sequence for AUTO_RST mode, configure the device ID in daisy-chain mode, select the SDO output format, control input range settings for individual channels, control the ALARM feature, reading the alarm flags, and programming the alarm thresholds for each channel. All program settings for this register are listed in Table 9. During power-up or reset, the different program registers in the device wake up with their default values and the device waits for a command to be written before being placed into any mode of operation.

8.5.2.1 Program Register Read/Write Operation

The program register is a 16-bit read or write register. There must be a minimum of 24 SCLKs after the $\overline{CS}$ falling edge for any read or write operation to the program registers. When $\overline{CS}$ goes low, the SDO line goes low as well. The device receives the command (see Table 7 and Table 8) through SDI where the first seven bits (bits 15-9) represent the register address and the eighth bit (bit 8) is the write or read instruction.

For a write cycle, the next eight bits (bits 7-0) on SDI are the desired data for the addressed register. Over the next eight SCLK cycles, the device outputs this 8-bit data that is written into the register. This data readback allows verification to determine if the correct data are entered into the device. A typical timing diagram for a program register write cycle is shown in Figure 107.

Table 7. Write Cycle Command Word

PIN	REGISTER ADDRESS (Bits 15-9)	WR/$\overline{RD}$ (Bit 8)	DATA (Bits 7-0)
SDI	ADDR[6:0]	1	DIN[7:0]

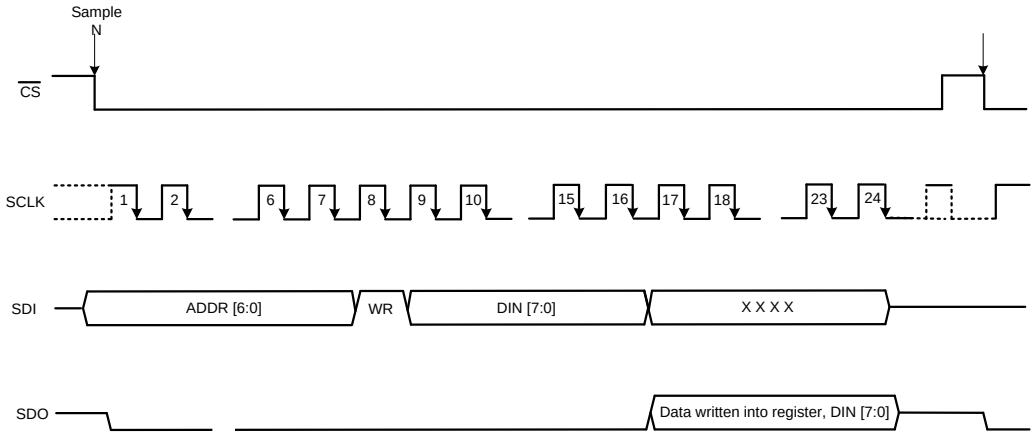

Figure 107. Program Register Write Cycle Timing Diagram

Copyright © 2015, Texas Instruments Incorporated

For a read cycle, the next eight bits (bits 7-0) on SDI are *don't care* bits and SDO stays low. From the 16th SCLK falling edge and onwards, SDO outputs the 8-bit data from the addressed register during the next eight clocks, in MSB-first fashion. A typical timing diagram for a program register read cycle is shown in Figure 108.

Table 8. Read Cycle Command Word

PIN	REGISTER ADDRESS (Bits 15-9)	WR/$\overline{RD}$ (Bit 8)	DATA (Bits 7-0)
SDI	ADDR[6:0]	0	XXXXX
SDO	0000 000	0	DOUT[7:0]

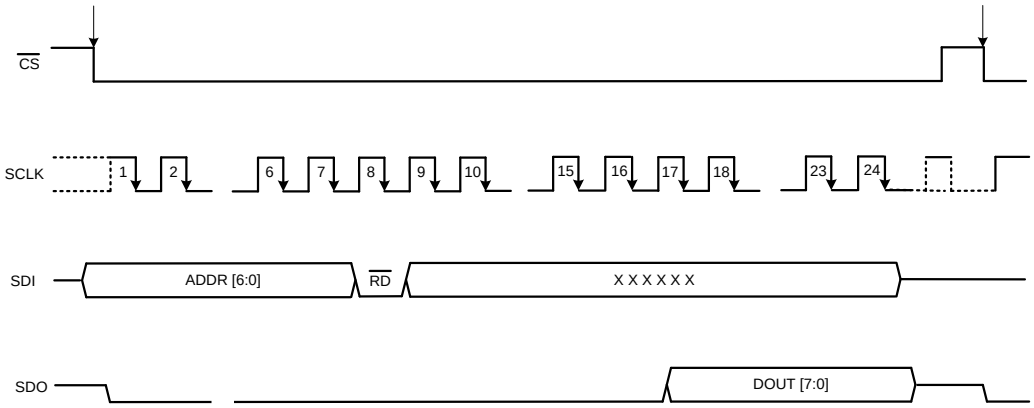

Figure 108. Program Register Read Cycle Timing Diagram

8.5.2.2 Program Register Map

This section provides a bit-by-bit description of each program register.

Table 9. Program Register Map

REGISTER	REGISTER ADDRESS BITS[15:9]	DEFAULT VALUE(1)	BIT 7	BIT 6	BIT 5	BIT 4	BIT 3	BIT 2	BIT 1	BIT 0
AUTO SCAN SEQUENCING CONTROL										
AUTO_SEQ_EN	01h	FFh	CH7_EN(2)	CH6_EN	CH5_EN	CH4_EN	CH3_EN	CH2_EN	CH1_EN	CH0_EN
Channel Power Down	02h	00h	CH7_PD	CH6_PD	CH5_PD	CH4_PD	CH3_PD	CH2_PD	CH1_PD	CH0_PD
DEVICE FEATURES SELECTION CONTROL										
Feature Select	03h	00h	DEV[1:0]		0	ALARM_EN0	0	SDO [2:0]		
RANGE SELECT REGISTERS										
Channel 0 Input Range	05h	00h	0	0	0	0	Range Select Channel 0[3:0]			
Channel 1 Input Range	06h	00h	0	0	0	0	Range Select Channel 1[3:0]			
Channel 2 Input Range	07h	00h	0	0	0	0	Range Select Channel 2[3:0]			
Channel 3 Input Range	08h	00h	0	0	0	0	Range Select Channel 3[3:0]			
Channel 4 Input Range	09h	00h	0	0	0	0	Range Select Channel 4[3:0]			
Channel 5 Input Range	0Ah	00h	0	0	0	0	Range Select Channel 5[3:0]			
Channel 6 Input Range	0Bh	00h	0	0	0	0	Range Select Channel 6[3:0]			
Channel 7 Input Range	0Ch	00h	0	0	0	0	Range Select Channel 7[3:0]			
ALARM FLAG REGISTERS (Read-Only)										
ALARM Overview Tripped-Flag	10h	00h	Tripped Alarm Flag Ch7	Tripped Alarm Flag Ch6	Tripped Alarm Flag Ch5	Tripped Alarm Flag Ch4	Tripped Alarm Flag Ch3	Tripped Alarm Flag Ch2	Tripped Alarm Flag Ch1	Tripped Alarm Flag Ch0
ALARM Ch 0-3 Tripped-Flag	11h	00h	Tripped Alarm Flag Ch0 Low	Tripped Alarm Flag Ch0 High	Tripped Alarm Flag Ch1 Low	Tripped Alarm Flag Ch1 High	Tripped Alarm Flag Ch2 Low	Tripped Alarm Flag Ch2 High	Tripped Alarm Flag Ch3 Low	Tripped Alarm Flag Ch3 High
ALARM Ch 0-3 Active-Flag	12h	00h	Active Alarm Flag Ch0 Low	Active Alarm Flag Ch0 High	Active Alarm Flag Ch1 Low	Active Alarm Flag Ch1 High	Active Alarm Flag Ch2 Low	Active Alarm Flag Ch2 High	Active Alarm Flag Ch3 Low	Active Alarm Flag Ch3 High
ALARM Ch 4-7 Tripped-Flag	13h	00h	Tripped Alarm Flag Ch4 Low	Tripped Alarm Flag Ch4 High	Tripped Alarm Flag Ch5 Low	Tripped Alarm Flag Ch5 High	Tripped Alarm Flag Ch6 Low	Tripped Alarm Flag Ch6 High	Tripped Alarm Flag Ch7 Low	Tripped Alarm Flag Ch7 High
ALARM Ch 4-7 Active-Flag	14h	00h	Active Alarm Flag Ch4 Low	Active Alarm Flag Ch4 High	Active Alarm Flag Ch5 Low	Active Alarm Flag Ch5 High	Active Alarm Flag Ch6 Low	Active Alarm Flag Ch6 High	Active Alarm Flag Ch7 Low	Active Alarm Flag Ch7 High

(1) All registers are reset to the default values at power-on or at device reset using the register settings method.
(2) Shading indicates bits or registers that are not included in the 4-channel version of the device. A write operation on any of these bits or registers has no effect on device behavior. A read operation on any of these bits or registers outputs all 1's on the SDO line.

Copyright © 2015, Texas Instruments Incorporated

Table 9. Program Register Map (continued)

REGISTER	REGISTER ADDRESS BITS[15:9]	DEFAULT VALUE[1]	BIT 7	BIT 6	BIT 5	BIT 4	BIT 3	BIT 2	BIT 1	BIT 0
ALARM THRESHOLD REGISTERS										
Ch 0 Hysteresis	15h	00h	CH0_HYST[5:0]						0	0
Ch 0 High Threshold MSB	16h	FFh	CH0_HT[13:6]							
Ch 0 High Threshold LSB	17h	FCh	CH0_HT[5:0]						0	0
Ch 0 Low Threshold MSB	18h	00h	CH0_LT[13:6]							
Ch 0 Low Threshold LSB	19h	00h	CH0_LT[5:0]						0	0
…	…	…	… See the *Alarm Threshold Setting Registers* for details regarding the ALARM threshold settings registers. …							
Ch 7 Hysteresis	38h	00h	CH7_HYST[5:0]						0	0
Ch 7 High Threshold MSB	39h	FFh	CH7_HT[13:6]							
Ch 7 High Threshold LSB	3Ah	FCh	CH7_HT[5:0]						0	0
Ch 7 Low Threshold MSB	3Bh	00h	CH7_LT[13:6]							
Ch 7 Low Threshold LSB	3Ch	00h	CH7_LT[5:0]						0	0
COMMAND READ BACK (Read-Only)										
Command Read Back	3Fh	00h	COMMAND_WORD[7:0]							

Copyright © 2015, Texas Instruments Incorporated

8.5.2.3 Program Register Descriptions

8.5.2.3.1 Auto-Scan Sequencing Control Registers

In AUTO_RST mode, the device automatically scans the preselected channels in ascending order with a new channel selected for every conversion. Each individual channel can be selectively included in the auto channel sequencing. For channels not selected for auto sequencing, the analog front-end circuitry can be individually powered down.

8.5.2.3.1.1 Auto-Scan Sequence Enable Register (address = 01h)

This register selects individual channels for sequencing in AUTO_RST mode. The default value for this register is FFh, which implies that in default condition all channels are included in the auto-scan sequence. If no channels are included in the auto sequence (that is, the value for this register is 00h), then channel 0 is selected for conversion by default.

Figure 109. AUTO_SEQ_EN Register

7	6	5	4	3	2	1	0
CH7_EN(1)	CH6_EN	CH5_EN	CH4_EN	CH3_EN	CH2_EN	CH1_EN	CH0_EN
R/W-1h	R/W-1h	R/W-1h	R/W-1h	R/W-1h	R/W-1h	R/W-1h	R/W-1h

LEGEND: R/W = Read/Write; -n = value after reset

(1) Shading indicates bits or registers that are not included in the 4-channel version of the device. A write operation on any of these bits or registers has no effect on device behavior. A read operation on any of these bits or registers outputs all 1's on the SDO line.

Table 10. AUTO_SEQ_EN Field Descriptions

Bit	Field	Type	Reset	Description
7	CH7_EN	R/W	1h	Channel 7 enable. 0 = Channel 7 is not selected for sequencing in AUTO_RST mode 1 = Channel 7 is selected for sequencing in AUTO_RST mode
6	CH6_EN	R/W	1h	Channel 6 enable. 0 = Channel 6 is not selected for sequencing in AUTO_RST mode 1 = Channel 6 is selected for sequencing in AUTO_RST mode
5	CH5_EN	R/W	1h	Channel 5 enable. 0 = Channel 5 is not selected for sequencing in AUTO_RST mode 1 = Channel 5 is selected for sequencing in AUTO_RST mode
4	CH4_EN	R/W	1h	Channel 4 enable. 0 = Channel 4 is not selected for sequencing in AUTO_RST mode 1 = Channel 4 is selected for sequencing in AUTO_RST mode
3	CH3_EN	R/W	1h	Channel 3 enable. 0 = Channel 3 is not selected for sequencing in AUTO_RST mode 1 = Channel 3 is selected for sequencing in AUTO_RST mode
2	CH2_EN	R/W	1h	Channel 2 enable. 0 = Channel 2 is not selected for sequencing in AUTO_RST mode 1 = Channel 2 is selected for sequencing in AUTO_RST mode
1	CH1_EN	R/W	1h	Channel 1 enable. 0 = Channel 1 is not selected for sequencing in AUTO_RST mode 1 = Channel 1 is selected for sequencing in AUTO_RST mode
0	CH0_EN	R/W	1h	Channel 0 enable. 0 = Channel 0 is not selected for sequencing in AUTO_RST mode 1 = Channel 0 is selected for sequencing in AUTO_RST mode

Copyright © 2015, Texas Instruments Incorporated

8.5.2.3.1.2 Channel Power Down Register (address = 02h)

This register powers down individual channels that are not included for sequencing in AUTO_RST mode. The default value for this register is 00h, which implies that in default condition all channels are powered up. If all channels are powered down (that is, the value for this register is FFh), then the analog front-end circuits for all channels are powered down and the output of the ADC contains invalid data. If the device is in MAN-Ch_n mode and the selected channel is powered down, then the device yields invalid output that can also trigger a false alarm condition.

Figure 110. Channel Power Down Register

7	6	5	4	3	2	1	0
CH7_PD(1)	CH6_PD	CH5_PD	CH4_PD	CH3_PD	CH2_PD	CH1_PD	CH0_PD
R/W-0h	R/W-0h	R/W-0h	R/W-0h	R/W-0h	R/W-0h	R/W-0h	R/W-0h

LEGEND: R/W = Read/Write; -n = value after reset

(1) Shading indicates bits or registers that are not included in the 4-channel version of the device. A write operation on any of these bits or registers has no effect on device behavior. A read operation on any of these bits or registers outputs all 1's on the SDO line.

Table 11. Channel Power Down Register Field Descriptions

Bit	Field	Type	Reset	Description
7	CH7_PD	R/W	0h	Channel 7 power-down. 0 = The analog front-end on channel 7 is powered up and channel 7 can be included in the AUTO_RST sequence 1 = The analog front-end on channel 7 is powered down and channel 7 cannot be included in the AUTO_RST sequence
6	CH6_PD	R/W	0h	Channel 6 power-down. 0 = The analog front-end on channel 6 is powered up and channel 6 can be included in the AUTO_RST sequence 1 = The analog front-end on channel 6 is powered down and channel 6 cannot be included in the AUTO_RST sequence
5	CH5_PD	R/W	0h	Channel 5 power-down. 0 = The analog front-end on channel 5 is powered up and channel 5 can be included in the AUTO_RST sequence 1 = The analog front-end on channel 5 is powered down and channel 5 cannot be included in the AUTO_RST sequence
4	CH4_PD	R/W	0h	Channel 4 power-down. 0 = The analog front-end on channel 4 is powered up and channel 4 can be included in the AUTO_RST sequence 1 = The analog front-end on channel 4 is powered down and channel 4 cannot be included in the AUTO_RST sequence
3	CH3_PD	R/W	0h	Channel 3 power-down. 0 = The analog front-end on channel 3 is powered up and channel 3 can be included in the AUTO_RST sequence 1 = The analog front end on channel 3 is powered down and channel 3 cannot be included in the AUTO_RST sequence
2	CH2_PD	R/W	0h	Channel 2 power-down. 0 = The analog front end on channel 2 is powered up and channel 2 can be included in the AUTO_RST sequence 1 = The analog front end on channel 2 is powered down and channel 2 cannot be included in the AUTO_RST sequence
1	CH1_PD	R/W	0h	Channel 1 power-down. 0 = The analog front end on channel 1 is powered up and channel 1 can be included in the AUTO_RST sequence 1 = The analog front end on channel 1 is powered down and channel 1 cannot be included in the AUTO_RST sequence
0	CH0_PD	R/W	0h	Channel 0 power-down. 0 = The analog front end on channel 0 is powered up and channel 0 can be included in the AUTO_RST sequence 1 = The analog front end on channel 0 is powered down and channel 0 cannot be included in the AUTO_RST sequence

8.5.2.3.2 Device Features Selection Control Register (address = 03h)

The bits in this register can be used to configure the device ID for daisy-chain operation, enable the ALARM feature, and configure the output bit format on SDO.

Figure 111. Feature Select Register

7	6	5	4	3	2	1	0
DEV[1:0]		0	ALARM_EN	0	SDO[2:0]		
R/W-0h		R-0h	R/W-0h	R-0h	R/W-0h		

LEGEND: R/W = Read/Write; R = Read only; -n = value after reset

Table 12. Feature Select Register Field Descriptions

Bit	Field	Type	Reset	Description
7-6	DEV[1:0]	R/W	0h	Device ID bits. 00 = ID for device 0 in daisy-chain mode 01 = ID for device 1 in daisy-chain mode 10 = ID for device 2 in daisy-chain mode 11 = ID for device 3 in daisy-chain mode
5	0	R	0h	Must always be set to 0
4	0	R/W	0h	ALARM feature enable. 0 = ALARM feature is disabled 1 = ALARM feature is enabled
3	0	R	0h	Must always be set to 0
2-0	SDO[2:0]	R/W	0h	SDO data format bits (see Table 13).

Table 13. Description of Program Register Bits for SDO Data Format

SDO FORMAT SDO[2:0]	BEGINNING OF THE OUTPUT BIT STREAM	OUTPUT FORMAT			
		BITS 24-9	BITS 8-5	BITS 4-3	BITS 2-0
000	16th SCLK falling edge, no latency	Conversion result for selected channel (MSB-first)	SDO pulled low		
001	16th SCLK falling edge, no latency	Conversion result for selected channel (MSB-first)	Channel address (1)	SDO pulled low	
010	16th SCLK falling edge, no latency	Conversion result for selected channel (MSB-first)	Channel address (1)	Device address (1)	SDO pulled low
011	16th SCLK falling edge, no latency	Conversion result for selected channel (MSB-first)	Channel address (1)	Device address (1)	Input range (1)

(1) Table 14 lists the bit descriptions for these channel addresses, device addresses, and input range.

Table 14. Bit Description for the SDO Data

BIT	BIT DESCRIPTION
24-9	14 bits of conversion result for the channel represented in MSB-first format followed by 00.
8-5	Four bits of channel address. 0000 = Channel 0 0001 = Channel 1 0010 = Channel 2 0011 = Channel 3 0100 = Channel 4 (valid only for the ADS8678) 0101 = Channel 5 (valid only for the ADS8678) 0110 = Channel 6 (valid only for the ADS8678) 0111 = Channel 7 (valid only for the ADS8678)
4-3	Two bits of device address (mainly useful in daisy-chain mode).
2-0	Three LSB bits of input voltage range (see the *Range Select Registers* section).

Copyright © 2015, Texas Instruments Incorporated

8.5.2.3.3 Range Select Registers (addresses 05h-0Ch)

Address 05h corresponds to channel 0, address 06h corresponds to channel 1, address 07h corresponds to channel 2, address 08h corresponds to channel 3, address 09h corresponds to channel 4, address 0Ah corresponds to channel 5, address 0Bh corresponds to channel 6, and address 0Ch corresponds to channel 7.

These registers allow the selection of input ranges for all individual channels (n = 0 to 3 for the ADS8674 and n = 0 to 7 for the ADS8678). The default value for these registers is 00h.

Figure 112. Channel *n* Input Range Registers

7	6	5	4	3	2	1	0
0	0	0	0	Range_CH*n*[3:0]			
R-0h	R-0h	R-0h	R-0h	R/W-0h			

LEGEND: R/W = Read/Write; R = Read only; -n = value after reset

Table 15. Channel *n* Input Range Registers Field Descriptions

Bit	Field	Type	Reset	Description
7-4	0	R	0h	Must always be set to 0
3-0	Range_CH*n*[3:0]	R/W	0h	Input range selection bits for channel n (n = 0 to 3 for the ADS8674 and n = 0 to 7 for the ADS8678). 0000 = Input range is set to ±2.5 x V_{REF} 0001 = Input range is set to ±1.25 x V_{REF} 0010 = Input range is set to ±0.625 x V_{REF} 0011 = Input range is set to ±0.3125 x V_{REF} 1011 = Input range is set to ±0.15625 x V_{REF} 0101 = Input range is set to 0 to 2.5 x V_{REF} 0110 = Input range is set to 0 to 1.25 x V_{REF} 0111 = Input range is set to 0 to 0.625 x V_{REF} 1111 = Input range is set to 0 to 0.3125 x V_{REF}

Copyright © 2015, Texas Instruments Incorporated

8.5.2.3.4 Alarm Flag Registers (Read-Only)

The alarm conditions related to individual channels are stored in these registers. The flags can be read when an alarm interrupt is received on the ALARM pin. There are two types of flag for every alarm: active and tripped. The active flag is set to 1 under the alarm condition (when data cross the alarm limit) and remains so as long as the alarm condition persists. The tripped flag turns on the alarm condition similar to the active flag, but remains set until read. This feature relieves the device from having to track alarms.

8.5.2.3.4.1 ALARM Overview Tripped-Flag Register (address = 10h)

The ALARM overview tripper-flags register contains the logical OR of high or low tripped alarm flags for all eight channels.

Figure 113. ALARM Overview Tripped-Flag Register

7	6	5	4	3	2	1	0
Tripped Alarm Flag Ch7[(1)]	Tripped Alarm Flag Ch6	Tripped Alarm Flag Ch5	Tripped Alarm Flag Ch4	Tripped Alarm Flag Ch3	Tripped Alarm Flag Ch2	Tripped Alarm Flag Ch1	Tripped Alarm Flag Ch0
R-0h	R-0h	R-0h	R-0h	R-0h	R-0h	R-0h	R-0h

LEGEND: R = Read only; -n = value after reset

(1) Shading indicates bits or registers that are not included in the 4-channel version of the device. A write operation on any of these bits or registers has no effect on device behavior. A read operation on any of these bits or registers outputs all 1's on the SDO line.

Table 16. ALARM Overview Tripped-Flag Register Field Descriptions

Bit	Field	Type	Reset	Description
7	Tripped Alarm Flag Ch7	R	0h	Tripped alarm flag for all analog channels at a glance. Each individual bit indicates a tripped alarm flag status for each channel, as per the alarm flags register for channels 7 to 0, respectively. 0 = No alarm detected 1 = Alarm detected
6	Tripped Alarm Flag Ch6	R	0h	
5	Tripped Alarm Flag Ch5	R	0h	
4	Tripped Alarm Flag Ch4	R	0h	
3	Tripped Alarm Flag Ch3	R	0h	
2	Tripped Alarm Flag Ch2	R	0h	
1	Tripped Alarm Flag Ch1	R	0h	
0	Tripped Alarm Flag Ch0	R	0h	

Copyright © 2015, Texas Instruments Incorporated

8.5.2.3.4.2 Alarm Flag Registers: Tripped and Active (address = 11h to 14h)

There are two alarm thresholds (high and low) per channel, with two flags for each threshold. An active alarm flag is enabled when an alarm is triggered (when data cross the alarm threshold) and remains enabled as long as the alarm condition persists. A tripped alarm flag is enabled in the same manner as an active alarm flag, but remains latched until read. Registers 11h to 14h in the program registers store the active and tripped alarm flags for all individual eight channels.

Figure 114. ALARM Ch0-3 Tripped-Flag Register (address = 11h)

7	6	5	4	3	2	1	0
Tripped Alarm Flag Ch0 Low	Tripped Alarm Flag Ch0 High	Tripped Alarm Flag Ch1 Low	Tripped Alarm Flag Ch1 High	Tripped Alarm Flag Ch2 Low	Tripped Alarm Flag Ch2 High	Tripped Alarm Flag Ch3 Low	Tripped Alarm Flag Ch3 High
R-0h	R-0h	R-0h	R-0h	R-0h	R-0h	R-0h	R-0h

LEGEND: R = Read only; -n = value after reset

Table 17. ALARM Ch0-3 Tripped-Flag Register Field Descriptions

Bit	Field	Type	Reset	Description
7-0	Tripped Alarm Flag Ch n Low or High (n = 0 to 3)	R	0h	Tripped alarm flag high, low for channel n (n = 0 to 3) Each individual bit indicates an active high or low alarm flag status for each channel, as per the alarm flags register for channels 0 to 7. 0 = No alarm detected 1 = Alarm detected

Figure 115. ALARM Ch0-3 Active-Flag Register (address = 12h)

7	6	5	4	3	2	1	0
Active Alarm Flag Ch0 Low	Active Alarm Flag Ch0 High	Active Alarm Flag Ch1 Low	Active Alarm Flag Ch1 High	Active Alarm Flag Ch2 Low	Active Alarm Flag Ch2 High	Active Alarm Flag Ch3 Low	Active Alarm Flag Ch3 High
R-0h	R-0h	R-0h	R-0h	R-0h	R-0h	R-0h	R-0h

LEGEND: R = Read only; -n = value after reset

Table 18. ALARM Ch0-3 Active-Flag Register Field Descriptions

Bit	Field	Type	Reset	Description
7-0	Active Alarm Flag Ch n Low or High (n = 0 to 3)	R	0h	Active alarm flag high, low for channel n (n = 0 to 3) Each individual bit indicates an active high or low alarm flag status for each channel, as per the alarm flags register for channels 0 to 7. 0 = No alarm detected 1 = Alarm detected

Figure 116. ALARM Ch4-7 Tripped-Flag Register (address = 13h)(1)

7	6	5	4	3	2	1	0
Tripped Alarm Flag Ch4 Low	Tripped Alarm Flag Ch4 High	Tripped Alarm Flag Ch5 Low	Tripped Alarm Flag Ch5 High	Tripped Alarm Flag Ch6 Low	Tripped Alarm Flag Ch6 High	Tripped Alarm Flag Ch7 Low	Tripped Alarm Flag Ch7 High
R-0h	R-0h	R-0h	R-0h	R-0h	R-0h	R-0h	R-0h

LEGEND: R = Read only; -n = value after reset

(1) This register is not included in the 4-channel version of the device. A write operation on this register has no effect on device behavior. A read operation on this register outputs all 1's on the SDO line.

Table 19. ALARM Ch4-7 Tripped-Flag Register Field Descriptions

Bit	Field	Type	Reset	Description
7-0	Tripped Alarm Flag Ch n Low or High (n = 4 to 7)	R	0h	Tripped alarm flag high, low for channel n (n = 4 to 7). Each individual bit indicates an active high or low alarm flag status for each channel, as per the alarm flags register for channels 0 to 7. 0 = No alarm detected 1 = Alarm detected

Figure 117. ALARM Ch4-7 Active-Flag Register (address = 14h)[1]

7	6	5	4	3	2	1	0
Active Alarm Flag Ch4 Low	Active Alarm Flag Ch4 High	Active Alarm Flag Ch5 Low	Active Alarm Flag Ch5 High	Active Alarm Flag Ch6 Low	Active Alarm Flag Ch6 High	Active Alarm Flag Ch7 Low	Active Alarm Flag Ch7 High
R-0h	R-0h	R-0h	R-0h	R-0h	R-0h	R-0h	R-0h

LEGEND: R = Read only; -n = value after reset

(1) This register is not included in the 4-channel version of the device. A write operation on this register has no effect on device behavior. A read operation on this register outputs all 1's on the SDO line.

Table 20. ALARM Ch4-7 Active-Flag Register Field Descriptions

Bit	Field	Type	Reset	Description
7-0	Active Alarm Flag Ch n Low or High (n = 4 to 7)	R	0h	Active alarm flag high, low for channel n (n = 4 to 7). Each individual bit indicates an active high or low alarm flag status for each channel, as per the alarm flags register for channels 0 to 7. 0 = No alarm detected 1 = Alarm detected

Copyright © 2015, Texas Instruments Incorporated

8.5.2.3.5 Alarm Threshold Setting Registers

The ADS8674 and ADS8678 feature individual high and low alarm threshold settings for each channel. Each alarm threshold is 14 bits wide with 6-bit hysteresis, which is the same for both high and low threshold settings. This 34-bit setting is accomplished through five 8-bit registers associated with every high and low alarm.

NAME	ADDR	BIT 7	BIT 6	BIT 5	BIT 4	BIT 3	BIT 2	BIT 1	BIT 0
Ch 0 Hysteresis	15h	CH0_HYST[5:0]						0	0
Ch 0 High Threshold MSB	16h	CH0_HT[13:6]							
Ch 0 High Threshold LSB	17h	CH0_HT[5:0]						0	0
Ch 0 Low Threshold MSB	18h	CH0_LT[13:6]							
Ch 0 Low Threshold LSB	19h	CH0_LT[5:0]						0	0
Ch 1 Hysteresis	1Ah	CH1_HYST[5:0]						0	0
Ch 1 High Threshold MSB	1Bh	CH1_HT[13:6]							
Ch 1 High Threshold LSB	1Ch	CH1_HT[5:0]						0	0
Ch 1 Low Threshold MSB	1Dh	CH1_LT[13:6]							
Ch 1 Low Threshold LSB	1Eh	CH1_LT[5:0]						0	0
Ch 2 Hysteresis	1Fh	CH2_HYST[5:0]						0	0
Ch 2 High Threshold MSB	20h	CH2_HT[13:6]							
Ch 2 High Threshold LSB	21h	CH2_HT[5:0]						0	0
Ch 2 Low Threshold MSB	22h	CH2_LT[13:6]							
Ch 2 Low Threshold LSB	23h	CH2_LT[5:0]						0	0
Ch 3 Hysteresis	24h	CH3_HYST[5:0]						0	0
Ch 3 High Threshold MSB	25h	CH3_HT[13:6]							
Ch 3 High Threshold LSB	26h	CH3_HT[5:0]						0	0
Ch 3 Low Threshold MSB	27h	CH3_LT[13:6]							
Ch 3 Low Threshold LSB	28h	CH3_LT[5:0]						0	0
Ch 4 Hysteresis (1)	29h	CH4_HYST[5:0]						0	0
Ch 4 High Threshold MSB	2Ah	CH4_HT[13:6]							
Ch 4 High Threshold LSB	2Bh	CH4_HT[5:0]						0	0
Ch 4 Low Threshold MSB	2Ch	CH4_LT[13:6]							
Ch 4 Low Threshold LSB	2Dh	CH4_LT[5:0]						0	0
Ch 5 Hysteresis	2Eh	CH5_HYST[5:0]						0	0
Ch 5 High Threshold MSB	2Fh	CH5_HT[13:6]							
Ch 5 High Threshold LSB	30h	CH5_HT[5:0]						0	0
Ch 5 Low Threshold MSB	31h	CH5_LT[13:6]							
Ch 5 Low Threshold LSB	32h	CH5_LT[5:0]						0	0
Ch 6 Hysteresis	33h	CH6_HYST[5:0]						0	0
Ch 6 High Threshold MSB	34h	CH6_HT[13:6]							
Ch 6 High Threshold LSB	35h	CH6_HT[5:0]						0	0
Ch 6 Low Threshold MSB	36h	CH6_LT[13:6]							
Ch 6 Low Threshold LSB	37h	CH6_LT[5:0]						0	0
Ch 7 Hysteresis	38h	CH7_HYST[5:0]						0	0
Ch 7 High Threshold MSB	39h	CH7_HT[13:6]							
Ch 7 High Threshold LSB	3Ah	CH7_HT[5:0]						0	0
Ch 7 Low Threshold MSB	3Bh	CH7_LT[13:6]							
Ch 7 Low Threshold LSB	3Ch	CH7_LT[5:0]						0	0

(1) Shading indicates bits or registers not included in the 4-channel version of the device.

Figure 118. Ch n Hysteresis Registers

7	6	5	4	3	2	1	0
CHn_HYST[5:0]						0	0
R/W-0h						R-0h	R-0h

LEGEND: R/W = Read/Write; R = Read only; -n = value after reset

Table 21. Channel *n* Hysteresis Register Field Descriptions (n = 0 to 7 for the ADS8678; n = 0 to 3 for the ADS8674)

Bit	Field	Type	Reset	Description
7-2	Channel *n* Hysteresis[7-2] (n = 0 to 7 for the ADS8678; n = 0 to 3 for the ADS8674)	R/W	0h	These bits set the channel high and low alarm hysteresis for channel *n (n = 0 to 7 for the ADS8678; n = 0 to 3 for the ADS8674)* For example, bits 5-0 of the channel 0 register (address 15h) set the channel 0 alarm hysteresis. 000000 = No hysteresis 000001 = ±1-LSB hysteresis 000010 to 111110 = ±2-LSB to ±62-LSB hysteresis 111111 = ±63-LSB hysteresis
1-0	Channel *n* Hysteresis[1-0] (n = 0 to 7 for the ADS8678; n = 0 to 3 for the ADS8674)	R	0h	Read-only bit; internally set to 0

Figure 119. Ch n High Threshold MSB Registers

7	6	5	4	3	2	1	0
CHn_HT[13:6]							
R/W-1h							

LEGEND: R/W = Read/Write; -n = value after reset

Table 22. Channel *n* High Threshold MSB Register Field Descriptions (n = 0 to 7 for the ADS8678; n = 0 to 3 for the ADS8674)

Bit	Field	Type	Reset	Description
7-0	CH*n*_HT[15:8] (n = 0 to 7 for the ADS8678; n = 0 to 3 for the ADS8674)	R/W	1h	These bits set the MSB byte for the 14-bit channel *n* high alarm. For example, bits 7-0 of the channel 0 register (address 16h) set the MSB byte for the channel 0 high alarm threshold. The channel 0 high alarm threshold is AAFCh when bits 7-0 of the ch 0 high threshold MSB register (address 16h) are set to AAh and bits 5-0 of the ch 0 high threshold LSB register (address 17h) are set to 11 1111. 0000 0000 = MSB byte is 00h 0000 0001 = MSB byte is 01h 0000 0010 to 1110 1111 = MSB byte is 02h to FEh 1111 1111 = MSB byte is FFh

Copyright © 2015, Texas Instruments Incorporated

Figure 120. Ch n High Threshold LSB Registers

7	6	5	4	3	2	1	0
CHn_HT[5:0]						0	0
R/W-1h						R-0h	R-0h

LEGEND: R/W = Read/Write; R = Read only; -n = value after reset

Table 23. Channel *n* High Threshold LSB Register Field Descriptions (n = 0 to 7 for the ADS8678; n = 0 to 3 for the ADS8674)

Bit	Field	Type	Reset	Description
7-2	CH*n*_HT[7-2] (n = 0 to 7 for the ADS8678; n = 0 to 3 for the ADS8674)	R/W	1h	These bits set the LSB for the 14-bit channel *n* high alarm. For example, bits 5-0 of the channel 0 register (address 17h) set the LSB for the channel 0 high alarm threshold. The channel 0 high alarm threshold is AAFCh when bits 7-0 of the ch 0 high threshold MSB register (address 16h) are set to AAh and bits 5-0 of the ch 0 high threshold LSB register (address 17h) are set to 11 1111. 00 0000 = LSB is 00h 00 0001 = LSB is 01h 00 0010 to 11 1110 = LSB is 02h to 3Eh 11 1111 = LSB is 3Fh
1-0	CH*n*_HT[1-0] (n = 0 to 7 for the ADS8678; n = 0 to 3 for the ADS8674)	R	0h	Read-only bit; internally set to 0

Figure 121. Ch n Low Threshold MSB Registers

7	6	5	4	3	2	1	0
CHn_LT[13:6]							
R/W-0h							

LEGEND: R/W = Read/Write; -n = value after reset

Table 24. Channel *n* Low Threshold MSB Register Field Descriptions (n = 0 to 7 for the ADS8678; n = 0 to 3 for the ADS8674)

Bit	Field	Type	Reset	Description
7-0	CH*n*_LT[15:8] (n = 0 to 7 for the ADS8678; n = 0 to 3 for the ADS8674)	R/W	0h	These bits set the MSB byte for the 14-bit channel *n* low alarm. For example, bits 7-0 of the channel 0 register (address 18h) set the MSB byte for the channel 0 low alarm threshold. The channel 0 low alarm threshold is AAFCh when bits 7-0 of the ch 0 low threshold MSB register (address 18h) are set to AAh and bits 5-0 of the ch 0 low threshold LSB register (address 19h) are set to 11 1111. 0000 0000 = MSB byte is 00h 0000 0001 = MSB byte is 01h 0000 0010 to 1110 1111 = MSB byte is 02h to FEh 1111 1111 = MSB byte is FFh

Figure 122. Ch n Low Threshold LSB Registers

7	6	5	4	3	2	1	0
CHn_LT[5:0]						0	0
R/W-0h						R-0h	R-0h

LEGEND: R/W = Read/Write; R = Read only; -n = value after reset

Table 25. Channel *n* Low Threshold MSB Register Field Descriptions (n = 0 to 7 for the ADS8678; n = 0 to 3 for the ADS8674)

Bit	Field	Type	Reset	Description
7-2	CH*n*_LT[7-2] (n = 0 to 7 for the ADS8678; n = 0 to 3 for the ADS8674)	R/W	0h	These bits set the LSB for the 14-bit channel *n* low alarm. For example, bits 5-0 of the channel 0 register (address 19h) set the LSB for the channel 0 low alarm threshold. The channel 0 low alarm threshold is AAFCh when bits 7-0 of the ch 0 low threshold MSB register (address 18h) are set to AAh and bits 5-0 of the ch 0 low threshold LSB register (address 19h) are set to 11 1111. 00 0000 = LSB is 00h 00 0001 = LSB is 01h 00 0010 to 11 1110 = LSB is 02h to 3Eh 11 1111 = LSB is 3Fh
1-0	CH*n*_LT[1-0] (n = 0 to 7 for the ADS8678; n = 0 to 3 for the ADS8674)	R	0h	Read-only bit; internally set to 0

8.5.2.3.6 Command Read-Back Register (address = 3Fh)

This register allows the device mode of operation to be read. On execution of this command, the device outputs the command word executed in the previous data frame. The output of the command register appears on SDO from the 16th falling edge onwards in an MSB-first format. All information regarding the command register is contained in the first eight bits and the last eight bits are 0 (see Table 6), thus the command read-back operation can be stopped after the 24th SCLK cycle.

Figure 123. Command Read-Back Register

7	6	5	4	3	2	1	0
COMMAND_WORD[15:8]							
R-0h							

LEGEND: R = Read only; -n = value after reset

Table 26. Command Read-Back Register Field Descriptions

Bit	Field	Type	Reset	Description
7-0	COMMAND_WORD[15:8]	R	0h	Command executed in previous data frame.

Copyright © 2015, Texas Instruments Incorporated

9 Application and Implementation

NOTE

Information in the following applications sections is not part of the TI component specification, and TI does not warrant its accuracy or completeness. TI's customers are responsible for determining suitability of components for their purposes. Customers should validate and test their design implementation to confirm system functionality.

9.1 Application Information

The ADS8674 and ADS8678 devices are fully-integrated data acquisition systems based on a 14-bit SAR ADC. The devices include an integrated analog front-end for each input channel and an integrated precision reference with a buffer. As such, this device family does not require any additional external circuits for driving the reference or analog input pins of the ADC.

9.2 Typical Applications

9.2.1 Phase-Compensated, 8-Channel, Multiplexed Data Acquisition System for Power Automation

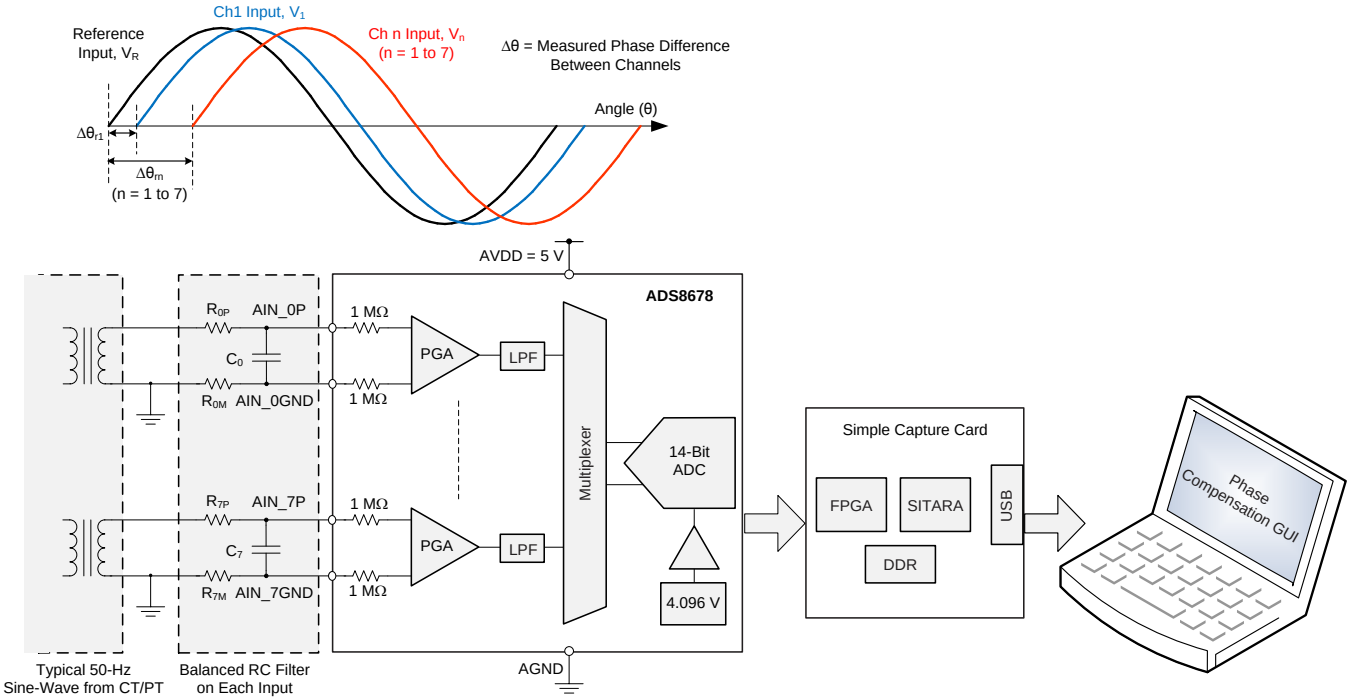

Figure 124. 8-Channel, Multiplexed Data Acquisition System for Power Automation

9.2.1.1 Design Requirements

In modern power grids, accurately measuring the electrical parameters of the various areas of the power grid is extremely critical. This measurement helps determine the operating status and running quality of the grid. Such accurate measurements also help diagnose potential problems with the power network so that these problems can be resolved quickly without having any significant service disruption. The key electrical parameters include amplitude, frequency, and phase, which are important for calculating the power factor, power quality, and other parameters of the power system.

Typical Applications (continued)

The phase angle of the electrical signal on the power network buses is a special interest to power system engineers. The primary objective for this design is to accurately measure the phase and phase difference between the analog input signals in a multichannel data acquisition system. When multiple input channels are sampled in a sequential manner as in a multiplexed ADC, an additional phase delay is introduced between the channels. Thus, the phase measurements are not accurate. However, this additional phase delay is constant and can be compensated in application software.

The key design requirements are given below:

- Single-ended sinusoidal input signal with a ±10-V amplitude and typical frequency (f_{IN} = 50 Hz).
- Design an 8-channel multiplexed data acquisition system using a 14-bit SAR ADC.
- Design a software algorithm to compensate for the additional phase difference between the channels.

9.2.1.2 Detailed Design Procedure

The application circuit and system diagram for this design is shown in Figure 124. This design includes a complete hardware and software implementation of a multichannel data acquisition system for power automation applications.

This system can be designed using the ADS8678, which is a 14-bit, 500-kSPS, 8-channel, multiplexed input, SAR ADC with integrated precision reference and analog front-end circuitry for each channel. The ADC supports bipolar input ranges up to ±10.24 V with a single 5-V supply and provides minimum latency in data output resulting from the SAR architecture. The integration offered by this device makes the ADS8674 and ADS8678 an ideal selection for such applications, because the integrated signal conditioning helps minimize system components and avoids the need for generating high-voltage supply rails. The overall system-level dc precision (gain and offset errors) and low temperature drift offered by this device helps system designers achieve the desired system accuracy without calibration. In most applications, using passive RC filters or multi-stage filters in front of the ADC is preferred to reduce the noise of the input signal.

The software algorithm implemented in this design uses the discrete fourier transform (DFT) method to calculate and track the input signal frequency, obtain the exact phase angle of the individual signal, calculate the phase difference, and implement phase compensation. The entire algorithm has four steps:

- Calculate the theoretical phase difference introduced by the ADC resulting from multiplexing input channels.
- Estimate the frequency of the input signal using frequency tracking and DFT techniques.
- Calculate the phase angle of all signals in the system based on the estimated frequency.
- Compensate the phase difference for all channels using the theoretical value of an additional MUX phase delay calculated in the first step.

For a step-by-step design procedure, circuit schematics, bill of materials, PCB files, simulation results, and test results, see *Phase Compensated 8-Channel, Multiplexed Data Acquisition System for Power Automation Reference Design* (TIDU427).

Copyright © 2015, Texas Instruments Incorporated

9.2.2 14-Bit, 8-Channel, Integrated Analog Input Module for Programmable Logic Controllers (PLCs)

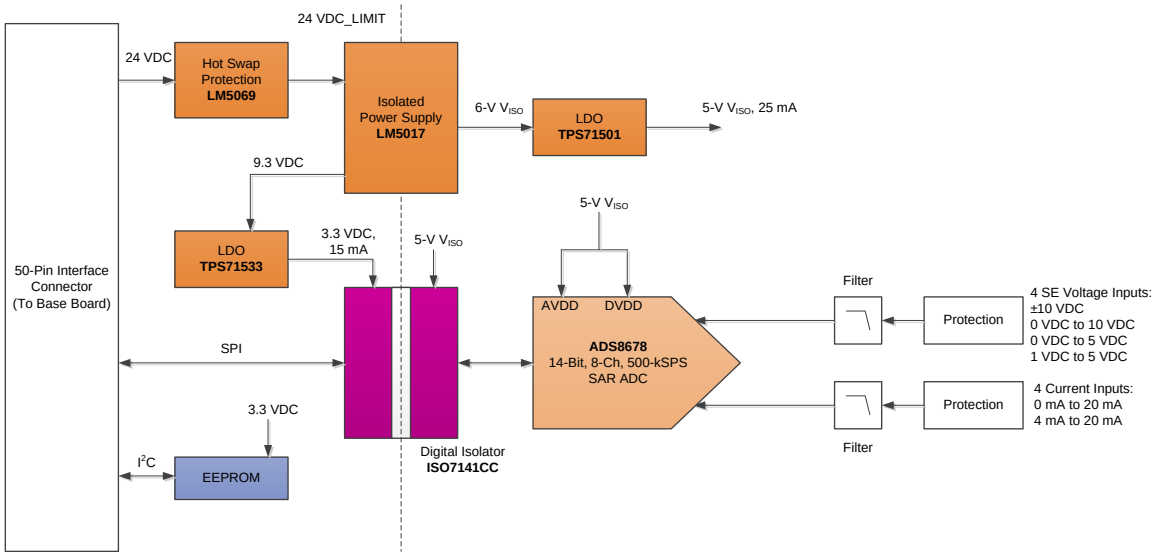

Figure 125. 14-Bit, 8-Channel, Integrated Analog Input Module for PLCs

9.2.2.1 Design Requirements

This reference design provides a complete solution for a single-supply industrial control analog input module. The design is suitable for process control end equipment, such as programmable logic controllers (PLCs), distributed control systems (DCSs), and data acquisition systems (DAS) modules that must digitize standard industrial current inputs, and bipolar or unipolar input voltage ranges up to ±10 V. In an industrial environment, the analog voltage and current ranges typically include ±2.5 V, ±5 V, ±10 V, 0 V to 5 V, 0 V to 10 V, 4 mA to 20 mA, and 0 mA to 20 mA. This reference design can measure all standard industrial voltage and current inputs. Eight channels are provided on the module, and each channel can be configured as a current or voltage input with software configuration.

The key design requirements are given below:

- Up to eight channels of user-programmable inputs:
  - Voltage inputs (with a typical Z_{IN} of 1 MΩ): ±10 V, ±5 V, ±2.5 V, 0 V to 10 V, and 0 V to 5 V.
  - Current inputs (with a Z_{IN} of 300 Ω): 0 mA to 20 mA, 4 mA to 20 mA, and ±20 mA.
- A 14-bit SAR ADC with SPI.
- Accuracy of ≤ 0.2% at 25°C over the entire input range of voltage and current inputs.
- Onboard isolated Fly-Buck™ power supply with inrush current protection.
- Slim-form factor 96 mm × 50.8 mm × 10 mm (L × W × H).
- LabView-based GUI for signal-chain analysis and functional testing.
- Designed to comply with IEC61000-4 standards for ESD, EFT, and surge.

9.2.2.2 Detailed Design Procedure

The application circuit and system diagram for this design is shown in Figure 125.

The module has eight analog input channels, and each channel can be configured as a current or voltage input with software configuration. This design can be implemented using the ADS8678, 14-bit, 8-channel, single-supply SAR ADC with an on-chip PGA and reference. The on-chip PGA provides a high-input impedance (typically 1 MΩ) and filters noise interference. The on-chip, 4.096-V, ultra-low drift voltage reference is used as the reference for the ADC core.

Digital isolation is achieved using an ISO7141CC and ISO1541D. The host microcontroller communicates with a TCA6408A (an 8-bit, I^2C, I/O expander over an I^2C bus). The ISO1541D is a bidirectional, I^2C isolator that isolates the I^2C lines for the TCA6408A. The TCA6408A controls the low R_{ON} opto-switch (TLP3123) that is used to switch between voltage-to-current input modes. The input channel configuration is done in microcontroller firmware.

A low-cost, constant, on-time, synchronous buck regulator in fly-buck configuration with an external transformer (LM5017) generates the isolated power supply. The LM5017 has a wide input supply range, making this device ideal for accepting a 24-V industrial supply. This transformer can accept up to 100 V, thereby making reliable transient protection of the input supply more easily achievable. The fly-buck power supply isolates and steps the input voltage down to 6 V. The supply then provides that voltage to the TPS70950 (the low dropout regulator) to generate 5 V to power the ADS8678 and other circuitry. The LM5017 also features a number of other safety and reliability functions, such as undervoltage lockout (UVLO), thermal shutdown, and peak current limit protection.

Input analog signals are protected against high-voltage, fast-transient events often expected in an industrial environment. The protection circuitry makes use of the transient voltage suppressor (TVS) and ESD diodes. The RC low-pass mode filters are used on each analog input before the input reaches the ADS8678, thus eliminating any high-frequency noise pickups and minimizing aliasing.

For a step-by-step design procedure, circuit schematics, bill of materials, PCB files, simulation results, and test results, see *16-Bit, 8-Channel, Integrated Analog Input Module for Programmable Logic Controllers (PLCs)* (TIDU365).

10 Power-Supply Recommendations

The device uses two separate power supplies: AVDD and DVDD. The internal circuits of the device operate on AVDD; DVDD is used for the digital interface. AVDD and DVDD can be independently set to any value within the permissible range.

The AVDD supply pins must be decoupled with AGND by using a minimum 10-µF and 1-µF capacitor on each supply. Place the 1-µF capacitor as close to the supply pins as possible. Place a minimum 10-µF decoupling capacitor very close to the DVDD supply to provide the high-frequency digital switching current. The effect of using the decoupling capacitor is illustrated in the difference between the power-supply rejection ratio (PSRR) performance of the device. Figure 126 shows the PSRR of the device without using a decoupling capacitor. The PSRR improves when the decoupling capacitors are used, as shown in Figure 127.

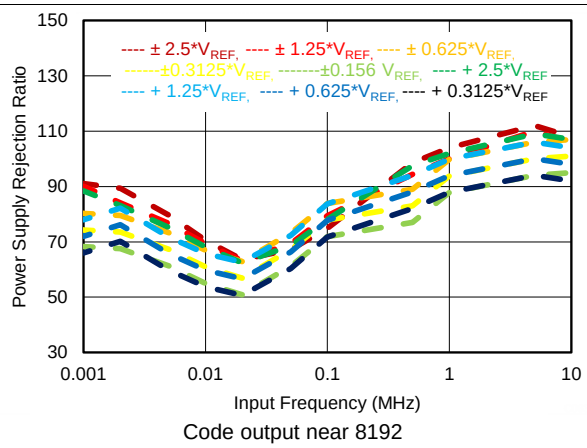

Figure 126. PSRR Without a Decoupling Capacitor

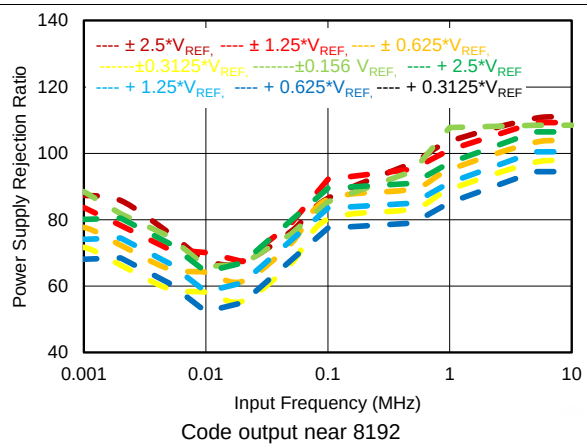

Figure 127. PSRR With a Decoupling Capacitor

Copyright © 2015, Texas Instruments Incorporated

11 Layout

11.1 Layout Guidelines

Figure 128 illustrates a PCB layout example for the ADS8674 and ADS8678.

- Partition the PCB into analog and digital sections. Care must be taken to ensure that the analog signals are kept away from the digital lines. This layout helps keep the analog input and reference input signals away from the digital noise. In this layout example, the analog input and reference signals are routed on the lower side of the board and the digital connections are routed on the top side of the board.
- Using a single dedicated ground plane is strongly encouraged.
- Power sources to the ADS8674 and ADS8678 must be clean and well-bypassed. TI recommends using a 1-µF, X7R-grade, 0603-size ceramic capacitor with at least a 10-V rating in close proximity to the analog (AVDD) supply pins. For decoupling the digital (DVDD) supply pin, a 10-µF, X7R-grade, 0805-size ceramic capacitor with at least a 10-V rating is recommended. Placing vias between the AVDD, DVDD pins and the bypass capacitors must be avoided. All ground pins must be connected to the ground plane using short, low impedance paths.
- There are two decoupling capacitors used for the REFCAP pin. The first is a small, 1-µF, X7R-grade, 0603-size ceramic capacitor placed close to the device pins for decoupling the high-frequency signals and the second is a 22-µF, X7R-grade, 1210-size ceramic capacitor to provide the charge required by the reference circuit of the device. Both of these capacitors must be directly connected to the device pins without any vias between the pins and capacitors.
- The REFIO pin also must be decoupled with a 10-µF ceramic capacitor, if the internal reference of the device is used. The capacitor must be placed close to the device pins.
- For the auxiliary channel, the fly-wheel RC filter components must be placed close to the device. Among ceramic surface-mount capacitors, COG (NPO) ceramic capacitors provide the best capacitance precision. The type of dielectric used in COG (NPO) ceramic capacitors provides the most stable electrical properties over voltage, frequency, and temperature changes.

Copyright © 2015, Texas Instruments Incorporated

11.2 Layout Example

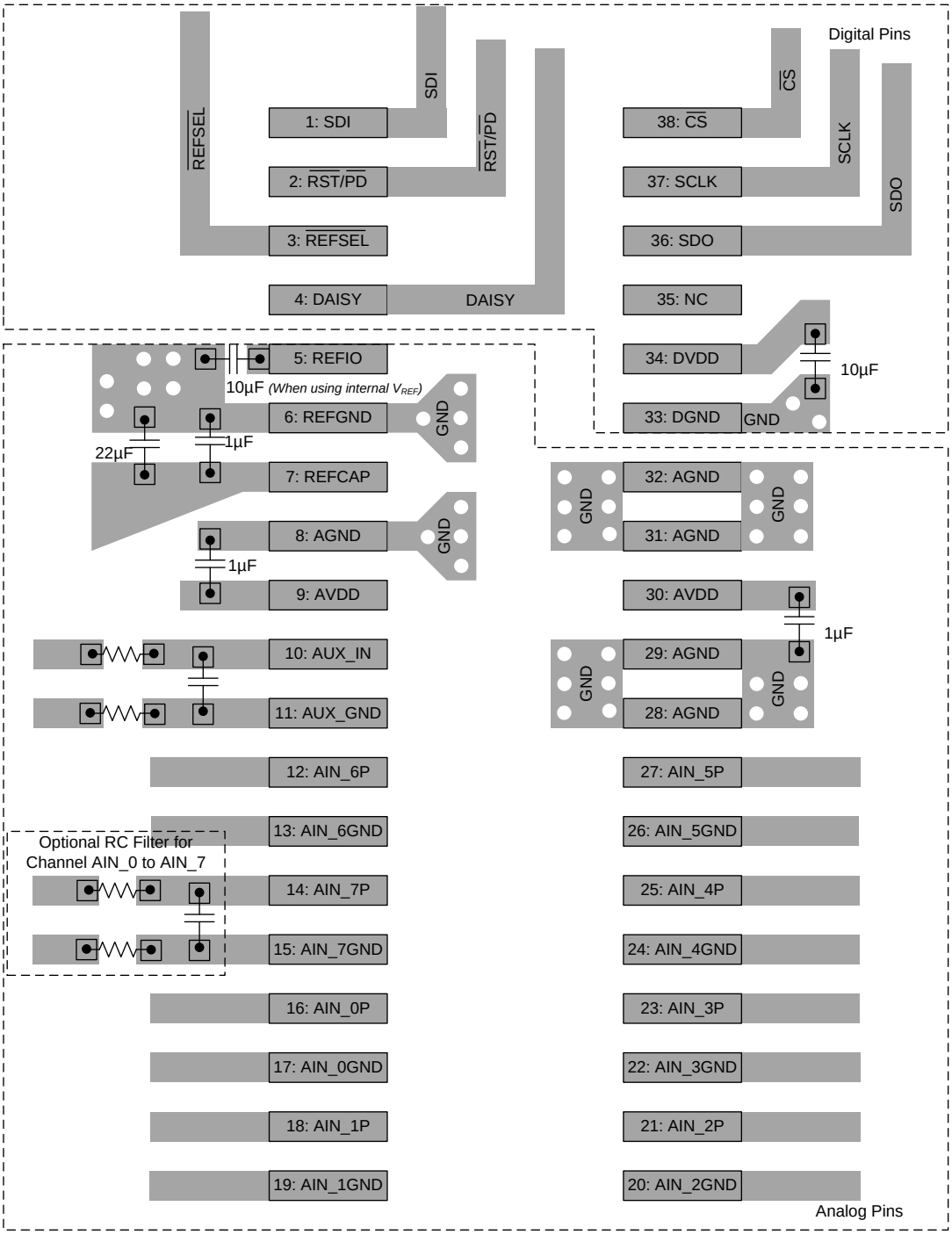

Figure 128. Board Layout for the ADS8674 and ADS8678

Copyright © 2015, Texas Instruments Incorporated

12 Device and Documentation Support

12.1 Documentation Support

12.1.1 Related Documentation

For related documentation see the following:

- LM5017 Data Sheet, SNVS783
- OPA320 Data Sheet, SBOS513
- REF5040 Data Sheet, SBOS410F
- AN-2029 - Handling & Process Recommendations, SNOA550B
- TIDA-00164 Verified Design Reference Guide: *16-Bit, 8-Channel, Integrated Analog Input Module for Programmable Logic Controllers (PLCs)*, TIDU365
- TIPD167 Verified Design Reference Guide: *Phase Compensated 8-Channel, Multiplexed Data Acquisition System for Power Automation*, TIDU427

12.2 Related Links

The table below lists quick access links. Categories include technical documents, support and community resources, tools and software, and quick access to sample or buy.

Table 27. Related Links

PARTS	PRODUCT FOLDER	SAMPLE & BUY	TECHNICAL DOCUMENTS	TOOLS & SOFTWARE	SUPPORT & COMMUNITY
ADS8674	Click here	Click here	Click here	Click here	Click here
ADS8678	Click here	Click here	Click here	Click here	Click here

12.3 Community Resources

The following links connect to TI community resources. Linked contents are provided "AS IS" by the respective contributors. They do not constitute TI specifications and do not necessarily reflect TI's views; see TI's Terms of Use.

TI E2E™ Online Community ***TI's Engineer-to-Engineer (E2E) Community.*** Created to foster collaboration among engineers. At e2e.ti.com, you can ask questions, share knowledge, explore ideas and help solve problems with fellow engineers.

Design Support ***TI's Design Support*** Quickly find helpful E2E forums along with design support tools and contact information for technical support.

12.4 Trademarks

E2E is a trademark of Texas Instruments.
Fly-Buck is a trademark of Texas Instruments, Inc.
SPI is a trademark of Motorola.
All other trademarks are the property of their respective owners.

12.5 Electrostatic Discharge Caution

This integrated circuit can be damaged by ESD. Texas Instruments recommends that all integrated circuits be handled with appropriate precautions. Failure to observe proper handling and installation procedures can cause damage.

ESD damage can range from subtle performance degradation to complete device failure. Precision integrated circuits may be more susceptible to damage because very small parametric changes could cause the device not to meet its published specifications.

12.6 Glossary

SLYZ022 — *TI Glossary*.

This glossary lists and explains terms, acronyms, and definitions.

13 Mechanical, Packaging, and Orderable Information

The following pages include mechanical packaging and orderable information. This information is the most current data available for the designated devices. This data is subject to change without notice and revision of this document. For browser-based versions of this data sheet, refer to the left-hand navigation.

Copyright © 2015, Texas Instruments Incorporated

PACKAGING INFORMATION

Orderable part number	Status (1)	Material type (2)	Package | Pins	Package qty | Carrier	RoHS (3)	Lead finish/ Ball material (4)	MSL rating/ Peak reflow (5)	Op temp (°C)	Part marking (6)
ADS8674IDBT	Active	Production	TSSOP (DBT) | 38	50 | TUBE	Yes	NIPDAU	Level-2-260C-1 YEAR	-40 to 125	ADS8674
ADS8674IDBT.B	Active	Production	TSSOP (DBT) | 38	50 | TUBE	Yes	NIPDAU	Level-2-260C-1 YEAR	-40 to 125	ADS8674
ADS8674IDBTR	Active	Production	TSSOP (DBT) | 38	2000 | LARGE T&R	Yes	NIPDAU	Level-2-260C-1 YEAR	-40 to 125	ADS8674
ADS8674IDBTR.B	Active	Production	TSSOP (DBT) | 38	2000 | LARGE T&R	Yes	NIPDAU	Level-2-260C-1 YEAR	-40 to 125	ADS8674
ADS8678IDBT	Active	Production	TSSOP (DBT) | 38	50 | TUBE	Yes	NIPDAU	Level-2-260C-1 YEAR	-40 to 125	ADS8678
ADS8678IDBT.B	Active	Production	TSSOP (DBT) | 38	50 | TUBE	Yes	NIPDAU	Level-2-260C-1 YEAR	-40 to 125	ADS8678
ADS8678IDBTR	Active	Production	TSSOP (DBT) | 38	2000 | LARGE T&R	Yes	NIPDAU	Level-2-260C-1 YEAR	-40 to 125	ADS8678
ADS8678IDBTR.B	Active	Production	TSSOP (DBT) | 38	2000 | LARGE T&R	Yes	NIPDAU	Level-2-260C-1 YEAR	-40 to 125	ADS8678

(1) **Status:** For more details on status, see our product life cycle.

(2) **Material type:** When designated, preproduction parts are prototypes/experimental devices, and are not yet approved or released for full production. Testing and final process, including without limitation quality assurance, reliability performance testing, and/or process qualification, may not yet be complete, and this item is subject to further changes or possible discontinuation. If available for ordering, purchases will be subject to an additional waiver at checkout, and are intended for early internal evaluation purposes only. These items are sold without warranties of any kind.

(3) **RoHS values:** Yes, No, RoHS Exempt. See the TI RoHS Statement for additional information and value definition.

(4) **Lead finish/Ball material:** Parts may have multiple material finish options. Finish options are separated by a vertical ruled line. Lead finish/Ball material values may wrap to two lines if the finish value exceeds the maximum column width.

(5) **MSL rating/Peak reflow:** The moisture sensitivity level ratings and peak solder (reflow) temperatures. In the event that a part has multiple moisture sensitivity ratings, only the lowest level per JEDEC standards is shown. Refer to the shipping label for the actual reflow temperature that will be used to mount the part to the printed circuit board.

(6) **Part marking:** There may be an additional marking, which relates to the logo, the lot trace code information, or the environmental category of the part.

Multiple part markings will be inside parentheses. Only one part marking contained in parentheses and separated by a "~" will appear on a part. If a line is indented then it is a continuation of the previous line and the two combined represent the entire part marking for that device.

Important Information and Disclaimer: The information provided on this page represents TI's knowledge and belief as of the date that it is provided. TI bases its knowledge and belief on information provided by third parties, and makes no representation or warranty as to the accuracy of such information. Efforts are underway to better integrate information from third parties. TI has taken and continues to take reasonable steps to provide representative and accurate information but may not have conducted destructive testing or chemical analysis on incoming materials and chemicals. TI and TI suppliers consider certain information to be proprietary, and thus CAS numbers and other limited information may not be available for release.

In no event shall TI's liability arising out of such information exceed the total purchase price of the TI part(s) at issue in this document sold by TI to Customer on an annual basis.

TAPE AND REEL INFORMATION

REEL DIMENSIONS

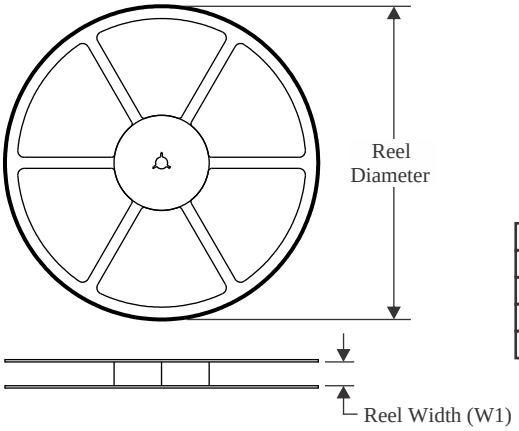

TAPE DIMENSIONS

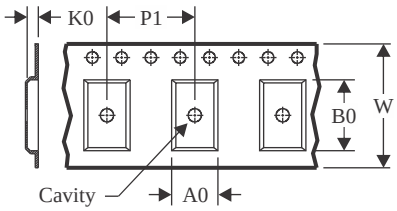

A0	Dimension designed to accommodate the component width
B0	Dimension designed to accommodate the component length
K0	Dimension designed to accommodate the component thickness
W	Overall width of the carrier tape
P1	Pitch between successive cavity centers

QUADRANT ASSIGNMENTS FOR PIN 1 ORIENTATION IN TAPE

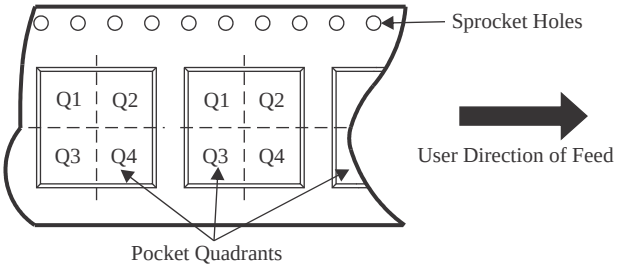

*All dimensions are nominal

Device	Package Type	Package Drawing	Pins	SPQ	Reel Diameter (mm)	Reel Width W1 (mm)	A0 (mm)	B0 (mm)	K0 (mm)	P1 (mm)	W (mm)	Pin1 Quadrant
ADS8674IDBTR	TSSOP	DBT	38	2000	330.0	16.4	6.75	10.1	1.8	12.0	16.0	Q1
ADS8678IDBTR	TSSOP	DBT	38	2000	330.0	16.4	6.75	10.1	1.8	12.0	16.0	Q1

TAPE AND REEL BOX DIMENSIONS

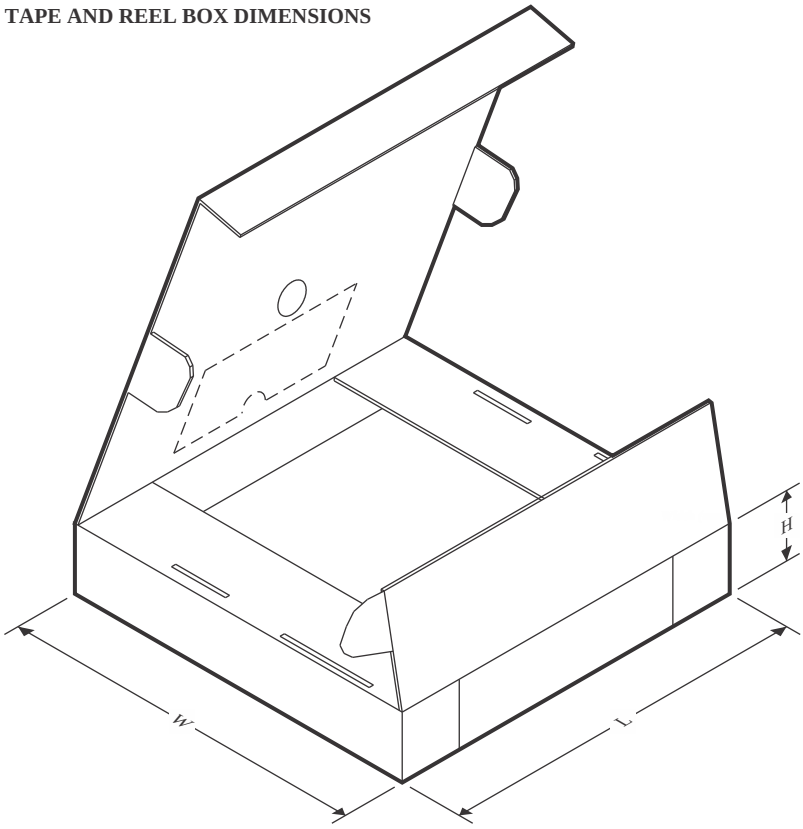

*All dimensions are nominal

Device	Package Type	Package Drawing	Pins	SPQ	Length (mm)	Width (mm)	Height (mm)
ADS8674IDBTR	TSSOP	DBT	38	2000	356.0	356.0	35.0
ADS8678IDBTR	TSSOP	DBT	38	2000	356.0	356.0	35.0

TUBE

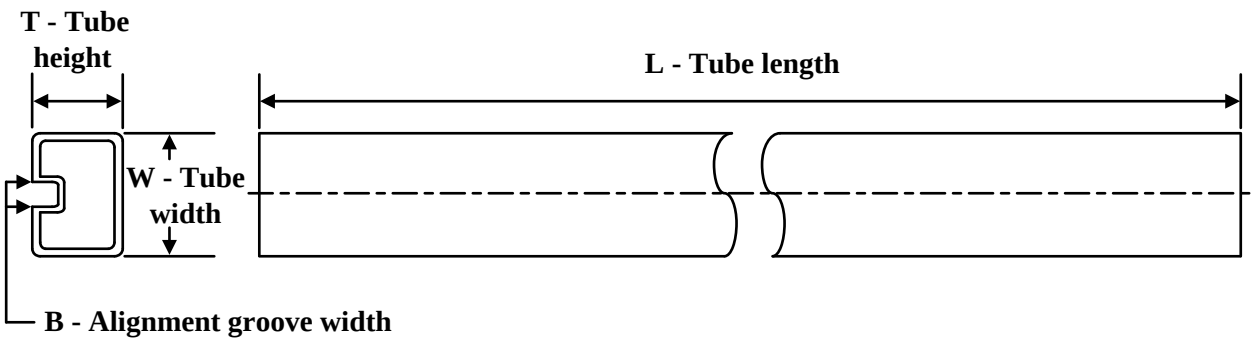

*All dimensions are nominal

Device	Package Name	Package Type	Pins	SPQ	L (mm)	W (mm)	T (µm)	B (mm)
ADS8674IDBT	DBT	TSSOP	38	50	530	10.2	3600	3.5
ADS8674IDBT.B	DBT	TSSOP	38	50	530	10.2	3600	3.5
ADS8678IDBT	DBT	TSSOP	38	50	530	10.2	3600	3.5
ADS8678IDBT.B	DBT	TSSOP	38	50	530	10.2	3600	3.5

DBT0038A

TSSOP - 1.2 mm max height

SMALL OUTLINE PACKAGE

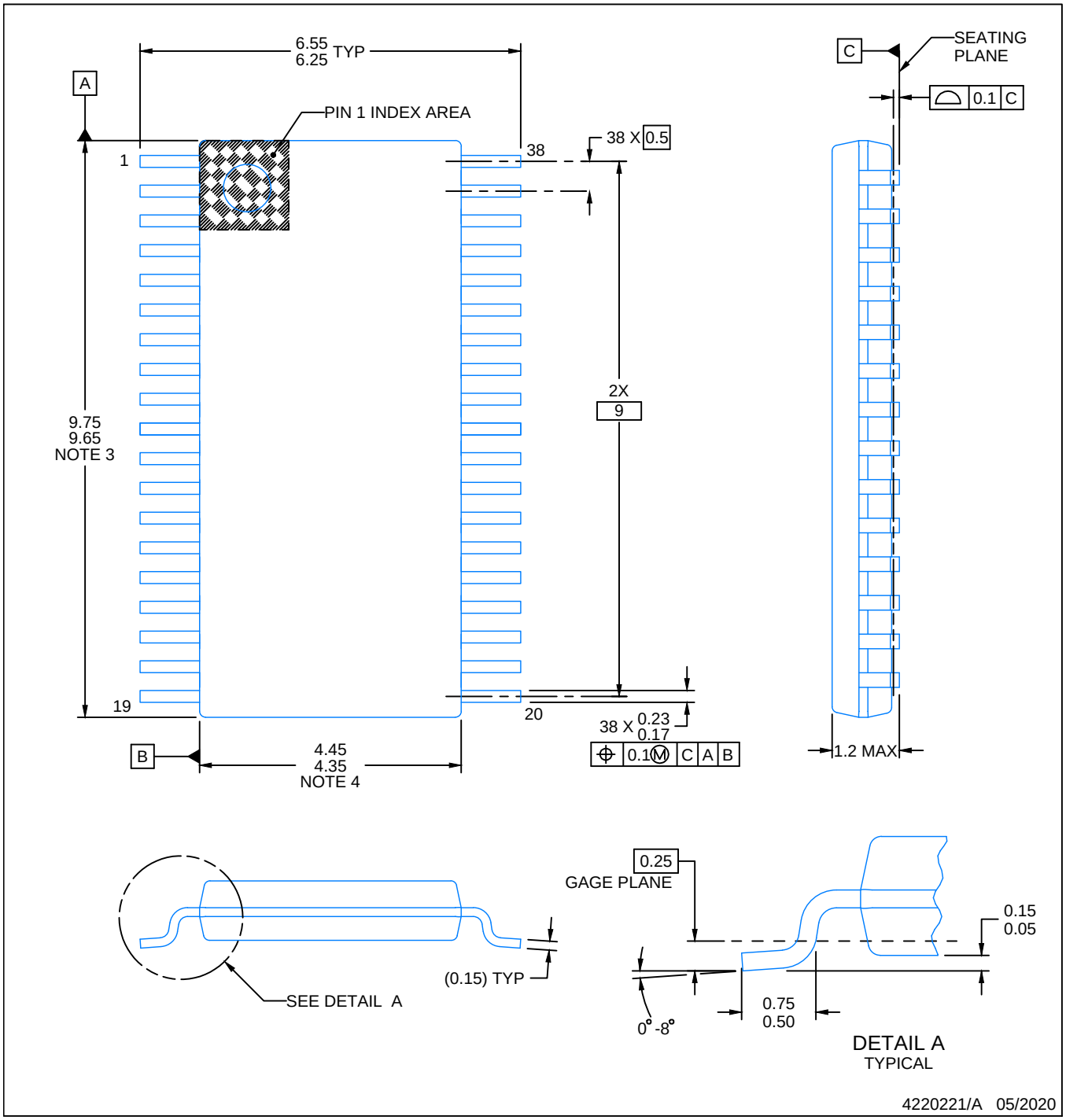

NOTES:

1. All linear dimensions are in millimeters. Any dimensions in parenthesis are for reference only. Dimensioning and tolerancing per ASME Y14.5M.
2. This drawing is subject to change without notice.
3. This dimension does not include mold flash, protrusions, or gate burrs. Mold flash, protrusions, or gate burrs shall not exceed 0.15 mm per side.
4. This dimension does not include interlead flash. Interlead flash shall not exceed 0.25 mm per side.
5. Reference JEDEC registration MO-153.

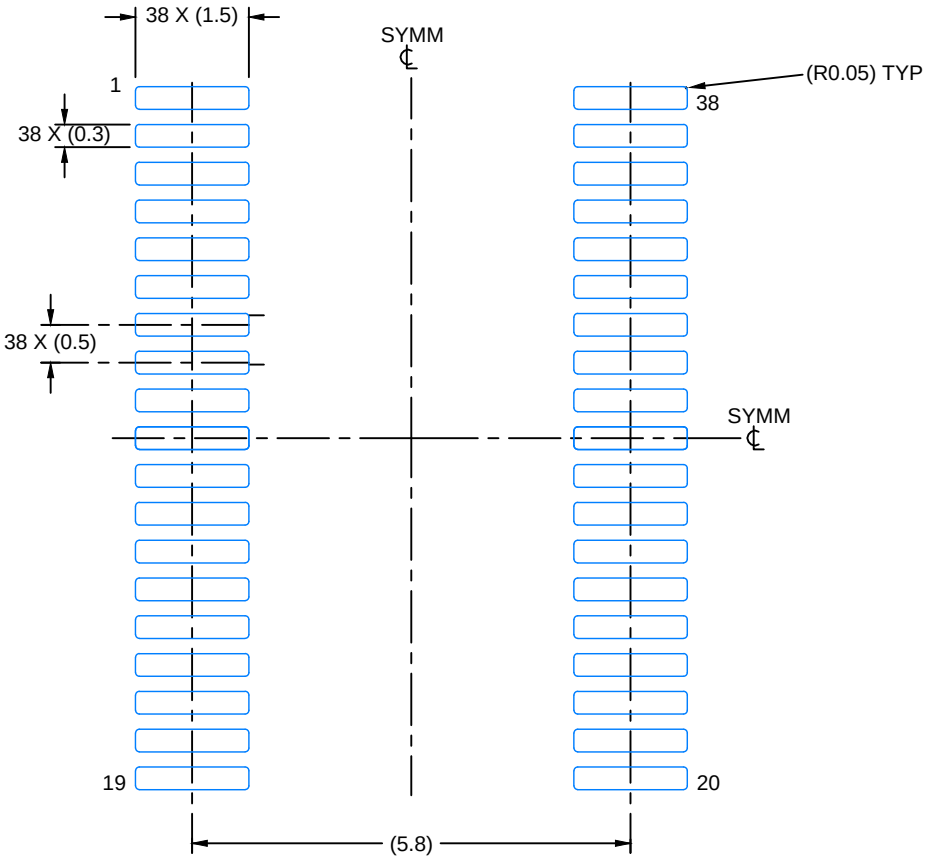

LAND PATTERN EXAMPLE
EXPOSED METAL SHOWN
SCALE: 10X

SOLDER MASK DETAILS

4220221/A 05/2020

NOTES: (continued)

6. Publication IPC-7351 may have alternate designs.
7. Solder mask tolerances between and around signal pads can vary based on board fabrication site.

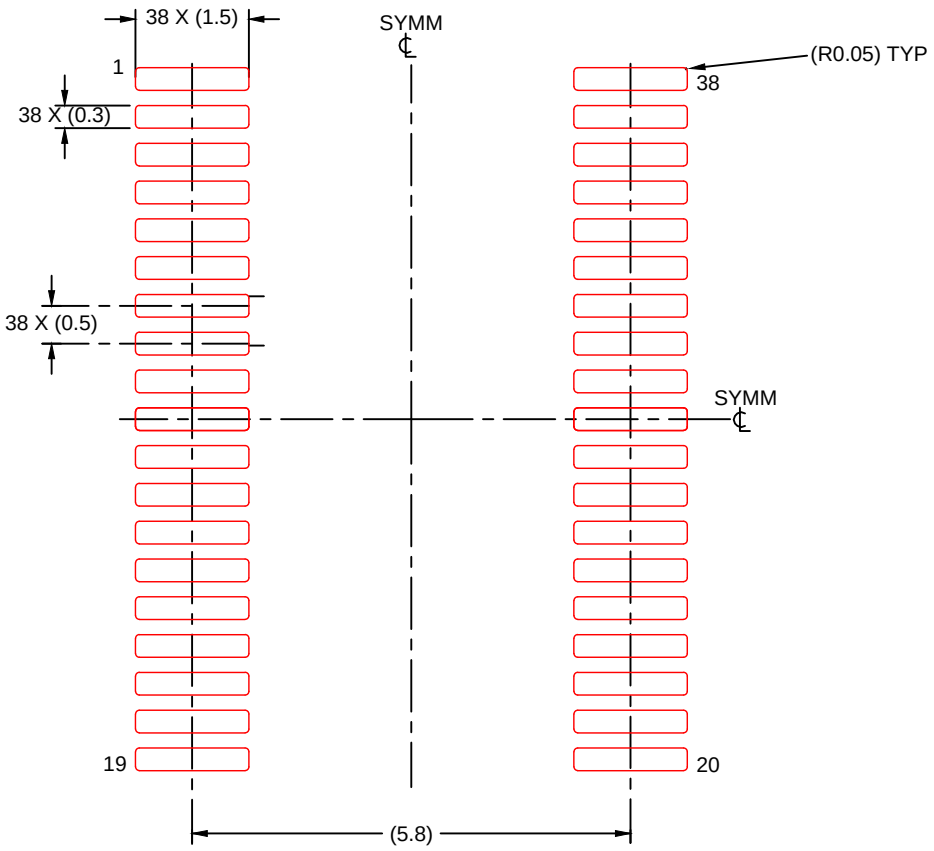

SOLDER PASTE EXAMPLE
BASED ON 0.125 mm THICK STENCIL
SCALE: 10X

4220221/A 05/2020

NOTES: (continued)

8. Laser cutting apertures with trapezoidal walls and rounded corners may offer better paste release. IPC-7525 may have alternate design recommendations.
9. Board assembly site may have different recommendations for stencil design.

IMPORTANT NOTICE AND DISCLAIMER

TI PROVIDES TECHNICAL AND RELIABILITY DATA (INCLUDING DATA SHEETS), DESIGN RESOURCES (INCLUDING REFERENCE DESIGNS), APPLICATION OR OTHER DESIGN ADVICE, WEB TOOLS, SAFETY INFORMATION, AND OTHER RESOURCES “AS IS” AND WITH ALL FAULTS, AND DISCLAIMS ALL WARRANTIES, EXPRESS AND IMPLIED, INCLUDING WITHOUT LIMITATION ANY IMPLIED WARRANTIES OF MERCHANTABILITY, FITNESS FOR A PARTICULAR PURPOSE OR NON-INFRINGEMENT OF THIRD PARTY INTELLECTUAL PROPERTY RIGHTS.

These resources are intended for skilled developers designing with TI products. You are solely responsible for (1) selecting the appropriate TI products for your application, (2) designing, validating and testing your application, and (3) ensuring your application meets applicable standards, and any other safety, security, regulatory or other requirements.

These resources are subject to change without notice. TI grants you permission to use these resources only for development of an application that uses the TI products described in the resource. Other reproduction and display of these resources is prohibited. No license is granted to any other TI intellectual property right or to any third party intellectual property right. TI disclaims responsibility for, and you will fully indemnify TI and its representatives against, any claims, damages, costs, losses, and liabilities arising out of your use of these resources.

TI’s products are provided subject to TI’s Terms of Sale or other applicable terms available either on ti.com or provided in conjunction with such TI products. TI’s provision of these resources does not expand or otherwise alter TI’s applicable warranties or warranty disclaimers for TI products.

TI objects to and rejects any additional or different terms you may have proposed.

Mailing Address: Texas Instruments, Post Office Box 655303, Dallas, Texas 75265
Copyright © 2025, Texas Instruments Incorporated