CDCEx937 Flexible Low Power LVCMOS Clock Generator With SSC Support For EMI Reduction

1 Features

- Member of Programmable Clock Generator Family
  - CDCEx913: 1PLL, 3 Outputs
  - CDCEx925: 2PLL, 5 Outputs
  - *CDCEx937: 3PLL, 7 Outputs*
  - CDCEx949: 4LL, 9 Outputs
- In-System Programmability and EEPROM
  - Serial Programmable Volatile Register
  - Nonvolatile EEPROM to Store Customer Setting
- Flexible Input Clocking Concept
  - External Crystal: 8MHz to 32MHz
  - On-Chip VCXO: Pull Range ±150ppm
  - Single-Ended LVCMOS up to 160MHz
- Free Selectable Output Frequency up to 230MHz
- Low-Noise PLL Core
  - PLL Loop Filter Components Integrated
  - Low Period Jitter (Typical 60ps)
- Separate Output Supply Pins
  - CDCE937: 3.3V and 2.5V
  - CDCEL937: 1.8V
- Flexible Clock Driver
  - Three User-Definable Control Inputs [S0/S1/S2], for Example, SSC Selection, Frequency Switching, Output Enable or Power Down
  - Generates Highly Accurate Clocks for Video, Audio, USB, IEEE1394, RFID, Bluetooth™, WLAN, Ethernet™, and GPS
  - Generates Common Clock Frequencies Used With TI DaVinci™, OMAP™, DSPs
  - Programmable SSC Modulation
  - Enables 0PPM Clock Generation
- 1.8V Device Power Supply
- Wide Temperature Range –40°C to 85°C
- Packaged in TSSOP
- Development and Programming Kit for Easy PLL Design and Programming (TI Pro-Clock™)

2 Applications

- High-Definition Television (HDTV)
- Set-Top Box (STB)
- IP-STBs
- DVD Players and Recorders
- Printers

3 Description

The CDCE937 and CDCEL937 devices are modular PLL-based low cost, high-performance, programmable clock synthesizers, multipliers and dividers. The devices generate up to 7 output clocks from a single input frequency. Each output can be programmed in-system for any clock frequency up to 230MHz, using up to three independent configurable PLLs.

The CDCEx937 has separate output supply pins, VDDOUT, which is 1.8V for CDCEL937 and to 2.5V to 3.3V for CDCE937.

The input accepts an external crystal or LVCMOS clock signal. If an external crystal is used, an on-chip load capacitor is adequate for most applications. The value of the load capacitor is programmable from 0 to 20pF. Additionally, an on-chip VCXO is selectable which allows synchronization of the output frequency to an external control signal, that is, PWM signal.

Package Information

PART NUMBER	PACKAGE(1)	PACKAGE SIZE(2)
CDCE937, CDCEL937	TSSOP (20)	6.50mm x 6.40mm

(1) For all available packages, see the orderable addendum at the end of the data sheet.
(2) The package size (length × width) is a nominal value and includes pins, where applicable.

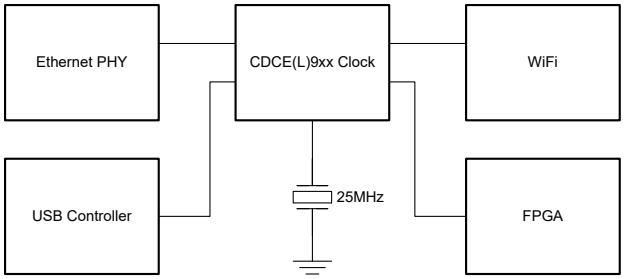

Typical Application Schematic

An IMPORTANT NOTICE at the end of this data sheet addresses availability, warranty, changes, use in safety-critical applications, intellectual property matters and other important disclaimers. PRODUCTION DATA.

Table of Contents

1 Features....1
2 Applications....1
3 Description....1
4 Pin Configuration and Functions....3
5 Specifications....4
5.1 Absolute Maximum Ratings....4
5.2 ESD Ratings....4
5.3 Recommended Operating Conditions....4
5.4 Thermal Information....5
5.5 Electrical Characteristics....5
5.6 Timing Requirements: CLK_IN....7
5.7 Timing Requirements: SDA/SCL....7
5.8 EEPROM Specification....7
5.9 Typical Characteristics....8
6 Parameter Measurement Information....9
7 Detailed Description....10
7.1 Overview....10
7.2 Functional Block Diagram....11
7.3 Feature Description....11
7.4 Device Functional Modes....14
7.5 Programming....15
8 Register Maps....16
8.1 SDA/SCL Configuration Registers....16
9 Application and Implementation....22
9.1 Application Information....22
9.2 Typical Application....22
9.3 Power Supply Recommendations....26
9.4 Layout....26
10 Device and Documentation Support....28
10.1 Device Support....28
10.2 Documentation Support....28
10.3 Receiving Notification of Documentation Updates....28
10.4 Support Resources....28
10.5 Trademarks....28
10.6 Electrostatic Discharge Caution....28
10.7 Glossary....28
11 Revision History....29
12 Mechanical, Packaging, and Orderable Information....30

Copyright © 2024 Texas Instruments Incorporated

4 Pin Configuration and Functions

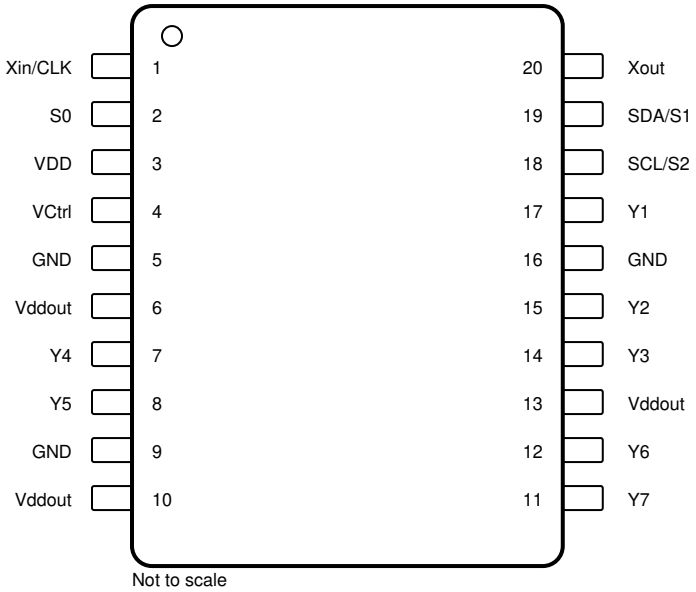

Figure 4-1. PW Package 20-Pin TSSOP Top View

Table 4-1. Pin Functions

PIN		TYPE[(1)]	DESCRIPTION
NAME	NO.		
GND	5, 9, 16	G	Ground
SCL/S2	18	I	SCL: Serial clock input (default configuration), LVCMOS; Internal pullup 500k; S2: User programmable control input; LVCMOS inputs; Internal pullup 500k
SDA/S1	19	I/O	SDA: Bi-directional serial data input/output (default configuration). LVCMOS; Internal pullup 500k; S1: User programmable control input; LVCMOS inputs; Internal pullup 500k
S0	2	I	User programmable control input S0; LVCMOS inputs; Internal pullup 500k
V_{Ctrl}	4	I	VCXO control voltage, leave open or pullup (approximately 500k) when not used
V_{DD}	3	P	1.8V power supply for the device
Vddout	6, 10, 13	P	CDCEL937: 1.8V supply for all outputs
			CDCE937: 3.3V or 2.5V supply for all outputs
Xin/CLK	1	I	Crystal oscillator input or LVCMOS clock input (selectable through SDA/SCL bus)
Xout	20	O	Crystal oscillator output, leave open or pullup (≅500k) when not used
Y1	17	O	LVCMOS outputs
Y2	15	O	LVCMOS outputs
Y3	14	O	LVCMOS outputs
Y4	7	O	LVCMOS outputs
Y5	8	O	LVCMOS outputs
Y6	12	O	LVCMOS outputs
Y7	11	O	LVCMOS outputs

(1) G= Ground, I = Input, O = Output, P = Power

Copyright © 2024 Texas Instruments Incorporated

5 Specifications

5.1 Absolute Maximum Ratings

over operating free-air temperature range (unless otherwise noted)[1]

	MIN	MAX	UNIT
Supply voltage, V_{DD}	–0.5	2.5	V
Input voltage, V_I [2] [3]	–0.5	V_{DD} + 0.5	V
Output voltage, V_O [2]	–0.5	Vddout + 0.5	V
Input current, I_I (V_I < 0, V_I > V_{DD})		20	mA
Continuous output current, I_O		50	mA
Junction temperature, T_J		125	°C
Storage temperature, T_{stg}	–65	150	°C

(1) Operation outside the *Absolute Maximum Ratings* may cause permanent device damage. *Absolute Maximum Ratings* do not imply functional operation of the device at these or any other conditions beyond those listed under *Recommended Operating Conditions*. If used outside the *Recommended Operating Conditions* but within the *Absolute Maximum Ratings*, the device may not be fully functional, and this may affect device reliability, functionality, performance, and shorten the device lifetime.
(2) The input and output negative voltage ratings can be exceeded if the input and output clamp-current ratings are observed.
(3) SDA and SCL can go up to 3.6V as stated in *Recommended Operating Conditions*.

5.2 ESD Ratings

			VALUE	UNIT
$V_{(ESD)}$	Electrostatic discharge	Human-body model (HBM), per ANSI/ESDA/JEDEC JS-001[1]	±2000	V
		Charged-device model (CDM), per JEDEC specification JESD22-C101[2]	±1500	

(1) JEDEC document JEP155 states that 500-V HBM allows safe manufacturing with a standard ESD control process.
(2) JEDEC document JEP157 states that 250-V CDM allows safe manufacturing with a standard ESD control process.

5.3 Recommended Operating Conditions

			MIN	NOM	MAX	UNIT
V_{DD}	Device supply voltage		1.7	1.8	1.9	V
V_O	Output Yx supply voltage, Vddout	CDCE937	2.3		3.6	V
		CDCEL937	1.7		1.9	
V_{IL}	Low-level input voltage LVCMOS				0.3 × V_{DD}	V
V_{IH}	High-level input voltage LVCMOS		0.7 × V_{DD}			V
$V_{I(thresh)}$	Input voltage threshold LVCMOS			0.5 × V_{DD}		V
V_{IS}	Input voltage	S0	0		1.9	V
		S1, S2, SDA, SCL, $V_{I(thresh)}$ = 0.5V_{DD}	0		3.6	
$V_{I(CLK)}$	Input voltage, CLK		0		1.9	V
I_{OH} /I_{OL}	Output current	Vddout = 3.3V			±12	mA
		Vddout = 2.5V			±10	
		Vddout = 1.8V			±8	
C_L	Output load LVCMOS				10	pF
T_A	Operating free-air temperature		–40		85	°C
CRYSTAL AND VCXO[1]						
f_{Xtal}	Crystal input frequency (fundamental mode)		8	27	32	MHz
ESR	Effective series resistance				100	Ω
f_{PR}	Pulling (0V ≤ Vctrl ≤ 1.8V)[2]		±120	±150		ppm
	Frequency control voltage, Vctrl		0		V_{DD}	V
C_0/C_1	Pullability ratio				220	
C_L	On-chip load capacitance at Xin and Xout		0		20	pF

(1) For more information about VCXO configuration, and crystal recommendation, see *VCXO Application Guideline for CDCE(L)9xx Family* (SCAA085).
(2) Pulling range depends on crystal-type, on-chip crystal load capacitance and PCB stray capacitance; pulling range of min ±120 ppm applies for crystal listed in *VCXO Application Guideline for CDCE(L)9xx Family* (SCAA085).

Copyright © 2024 Texas Instruments Incorporated

5.4 Thermal Information

THERMAL METRIC[1]		CDCE937, CDCEL937 PW (TSSOP) 20 PINS	UNIT
$R_{\theta JA}$	Junction-to-ambient thermal resistance	89.04	°C/W
$R_{\theta JC(top)}$	Junction-to-case (top) thermal resistance	31.33	°C/W
$R_{\theta JB}$	Junction-to-board thermal resistance	54.6	°C/W
ψ_{JT}	Junction-to-top characterization parameter	0.8	°C/W
ψ_{JB}	Junction-to-board characterization parameter	48.8	°C/W
$R_{\theta JC(bot)}$	Junction-to-case (bottom) thermal resistance	—	°C/W

(1) For more information about traditional and new thermal metrics, see the *Semiconductor and IC Package Thermal Metrics* application note.

5.5 Electrical Characteristics

over recommended operating free-air temperature range (unless otherwise noted)

PARAMETER		TEST CONDITIONS		MIN	TYP[1]	MAX	UNIT
I_{DD}	Supply current (see Figure 5-1)	All outputs off, $f_{(CLK)}$ = 27MHz, $f_{(VCO)}$ = 135MHz	All PLLS on		29		mA
			Per PLL		9		
I_{DDOUT}	Output supply current (see Figure 5-2 and Figure 5-3)	No load, all outputs on, f_{OUT} = 27MHz	CDCE937, V_{DDOUT} = 3.3V		3.1		mA
			CDCEL937, V_{DDOUT} = 1.8V		1.5		
$I_{DD(PD)}$	Power-down current	Every circuit powered down except SDA/SCL, f_{IN} = 0MHz, V_{DD} = 1.9V			50		µA
$V_{(PUC)}$	Supply voltage Vdd threshold for power-up control circuit			0.85		1.45	V
$f_{(VCO)}$	VCO frequency range of PLL			80		230	MHz
f_{OUT}	LVCMOS output frequency	Vddout = 3.3V		230			MHz
		Vddout = 1.8V		230			
LVCMOS PARAMETER							
V_{IK}	LVCMOS input voltage	V_{DD} = 1.7V, I_I = –18mA				–1.2	V
I_I	LVCMOS Input current	VI = 0V or V_{DD}, V_{DD} = 1.9V				±5	µA
I_{IH}	LVCMOS Input current for S0/S1/S2	V_I = V_{DD}, V_{DD} = 1.9V				5	µA
I_{IL}	LVCMOS Input current for S0/S1/S2	V_I = 0V, V_{DD} = 1.9V				–4	µA
C_I	Input capacitance at Xin/Clk	$V_{I(Clk)}$ = 0V or V_{DD}			6		pF
	Input capacitance at Xout	$V_{I(Xout)}$ = 0V or V_{DD}			2		
	Input capacitance at S0/S1/S2	V_{IS} = 0V or V_{DD}			3		
CDCE937 – LVCMOS FOR Vddout = 3.3V							
V_{OH}	LVCMOS high-level output voltage	Vddout = 3V, I_{OH} = –0.1mA		2.9			V
		Vddout = 3V, I_{OH} = –8mA		2.4			
		Vddout = 3V, I_{OH} = –12mA		2.2			
V_{OL}	LVCMOS low-level output voltage	Vddout = 3V, I_{OL} = 0.1mA				0.1	V
		Vddout = 3V, I_{OL} = 8mA				0.5	
		Vddout = 3V, I_{OL} = 12mA				0.8	
t_{PLH}, t_{PHL}	Propagation delay	All PLL bypass			3.2		ns
t_r/t_f	Rise and fall time	Vddout = 3.3V (20%–80%)			0.6		ns
$t_{jit(cc)}$	Cycle-to-cycle jitter[2] [3]	1 PLL switching, Y2-to-Y3			60	90	ps
		3 PLL switching, Y2-to-Y7			100	150	
$t_{jit(per)}$	Peak-to-peak period jitter[3]	1 PLL switching, Y2-to-Y3			70	100	ps
		3 PLL switching, Y2-to-Y7			120	180	

Copyright © 2024 Texas Instruments Incorporated

5.5 Electrical Characteristics (continued)

over recommended operating free-air temperature range (unless otherwise noted)

PARAMETER		TEST CONDITIONS	MIN	TYP[1]	MAX	UNIT
$t_{sk(o)}$	Output skew[4] (see Table 7-2)	f_{OUT} = 50MHz, Y1-to-Y3			60	ps
		f_{OUT} = 50MHz, Y2-to-Y5			160	
odc	Output duty cycle[5]	f_{VCO} = 100MHz, Pdiv = 1	45%		55%	
CDCE937 – LVCMOS FOR Vddout = 2.5V						
V_{OH}	LVCMOS high-level output voltage	Vddout = 2.3V, I_{OH} = –0.1mA	2.2			V
		Vddout = 2.3V, I_{OH} = –6mA	1.7			
		Vddout = 2.3V, I_{OH} = –10mA	1.6			
V_{OL}	LVCMOS low-level output voltage	Vddout = 2.3V, I_{OL} = 0.1mA			0.1	V
		Vddout = 2.3V, I_{OL} = 6mA			0.5	
		Vddout = 2.3V, I_{OL} = 10mA			0.7	
t_{PLH}, t_{PHL}	Propagation delay	All PLL bypass		3.4		ns
t_r/t_f	Rise and fall time	Vddout = 2.5V (20%–80%)		0.8		ns
$t_{jit(cc)}$	Cycle-to-cycle jitter[2] [3]	1 PLL switching, Y2-to-Y3		60	90	ps
		3 PLL switching, Y2-to-Y7		100	150	
$t_{jit(per)}$	Peak-to-peak period jitter[4]	1 PLL switching, Y2-to-Y3		70	100	ps
		3 PLL switching, Y2-to-Y7		120	180	
$t_{sk(o)}$	Output skew[4] (see Table 7-2)	f_{OUT} = 50MHz, Y1-to-Y3			60	ps
		f_{OUT} = 50MHz, Y2-to-Y5			160	
odc	Output duty cycle[5]	$f_{(VCO)}$ = 100MHz, Pdiv = 1	45%		55%	
CDCEL937 – LVCMOS FOR Vddout = 1.8V						
V_{OH}	LVCMOS high-level output voltage	Vddout = 1.7V, I_{OH} = –0.1mA	1.6			V
		Vddout = 1.7V, I_{OH} = –4mA	1.4			
		Vddout = 1.7V, I_{OH} = –8mA	1.1			
V_{OL}	LVCMOS low-level output voltage	Vddout = 1.7V, I_{OL} = 0.1mA			0.1	V
		Vddout = 1.7V, I_{OL} = 4mA			0.3	
		Vddout = 1.7V, I_{OL} = 8mA			0.6	
t_{PLH}, t_{PHL}	Propagation delay	All PLL bypass		2.6		ns
t_r/t_f	Rise and fall time	Vddout= 1.8V (20%–80%)		0.7		ns
$t_{jit(cc)}$	Cycle-to-cycle jitter[2] [3]	1 PLL switching, Y2-to-Y3		70	120	ps
		3 PLL switching, Y2-to-Y7		100	150	
$t_{jit(per)}$	Peak-to-peak period jitter[3]	1 PLL switching, Y2-to-Y3		90	140	ps
		3 PLL switching, Y2-to-Y7		120	190	
$t_{sk(o)}$	Output skew[4] (see Table 7-2)	f_{OUT} = 50MHz, Y1-to-Y3			60	ps
		f_{OUT} = 50MHz, Y2-to-Y5			160	
odc	Output duty cycle[5]	$f_{(VCO)}$ = 100MHz, Pdiv = 1	45%		55%	
SDA AND SCL						
V_{IK}	SCL and SDA input clamp voltage	V_{DD} = 1.7V; I_I = –18mA			–1.2	V
I_{IH}	SCL and SDA input current	V_I = V_{DD}; V_{DD} = 1.9V			±10	µA
V_{IH}	SDA/SCL input high voltage[6]		0.7 × V_{DD}			V
V_{IL}	SDA/SCL input low voltage[6]				0.3 × V_{DD}	V
V_{OL}	SDA low-level output voltage	I_{OL} = 3mA, V_{DD} = 1.7V			0.2 × V_{DD}	V
C_I	SCL/SDA Input capacitance	V_I = 0V or V_{DD}		3	10	pF

(1) All typical values are at respective nominal V_{DD}.
(2) 10000 cycles.
(3) Jitter depends on configuration. Data is taken under the following conditions: 1-PLL is f_{IN} = 27MHz and Y2/3 = 27MHz (measured at Y2); 3-PLL is f_{IN} = 27MHz, Y2/3 = 27MHz (measured at Y2), Y4/5 = 16.384MHz, and Y6/7 = 74.25MHz.
(4) The tsk(o) specification is only valid for equal loading of each bank of outputs, and outputs are generated from the same divider; data taking on rising edge (tr).
(5) odc depends on output rise and fall time (t_r/t_f).
(6) SDA and SCL pins are 3.3V tolerant.

Copyright © 2024 Texas Instruments Incorporated

5.6 Timing Requirements: CLK_IN

over operating free-air temperature range (unless otherwise noted)

			MIN	NOM	MAX	UNIT
f_{CLK}	LVCMOS clock input frequency	PLL bypass mode	0		160	MHz
		PLL mode	8		160	
t_r / t_f	Rise and fall time CLK signal (20% to 80%)				3	ns
$duty_{CLK}$	Duty cycle CLK at $V_{DD}/2$		40%		60%	

5.7 Timing Requirements: SDA/SCL

over operating free-air temperature range (unless otherwise noted; see Figure 7-2)

			MIN	NOM	MAX	UNIT
f_{SCL}	SCL clock frequency	Standard mode	0		100	kHz
		Fast mode	0		400	
$t_{su(START)}$	START setup time (SCL high before SDA low)	Standard mode	4.7			µs
		Fast mode	0.6			
$t_{h(START)}$	START hold time (SCL low after SDA low)	Standard mode	4			µs
		Fast mode	0.6			
$t_{w(SCLL)}$	SCL low-pulse duration	Standard mode	4.7			µs
		Fast mode	1.3			
$t_{w(SCLH)}$	SCL high-pulse duration	Standard mode	4			µs
		Fast mode	0.6			
$t_{h(SDA)}$	SDA hold time (SDA valid after SCL low)	Standard mode	0		3.45	µs
		Fast mode	0		0.9	
$t_{su(SDA)}$	SDA setup time	Standard mode	250			ns
		Fast mode	100			
t_r	SCL/SDA input rise time	Standard mode			1000	ns
		Fast mode			300	
t_f	SCL/SDA input fall time				300	ns
$t_{su(STOP)}$	STOP setup time	Standard mode	4			µs
		Fast mode	0.6			
t_{BUS}	Bus free time between a STOP and START condition	Standard mode	4.7			µs
		Fast mode	1.3			

5.8 EEPROM Specification

		MIN	TYP	MAX	UNIT
EEcyc	Programming cycles of EEPROM	1000			cycles
EEret	Data retention	10			years

5.9 Typical Characteristics

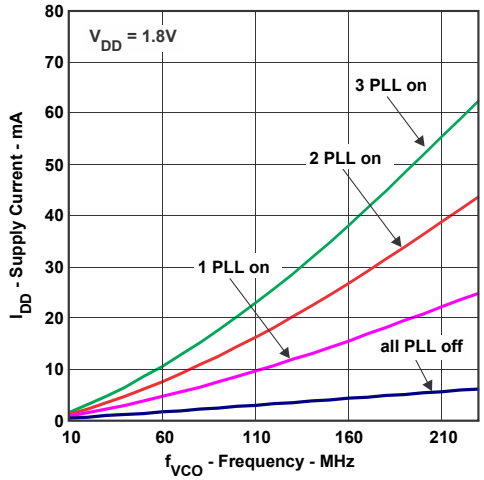

Figure 5-1. CDCEx937 Supply Current vs PLL Frequency

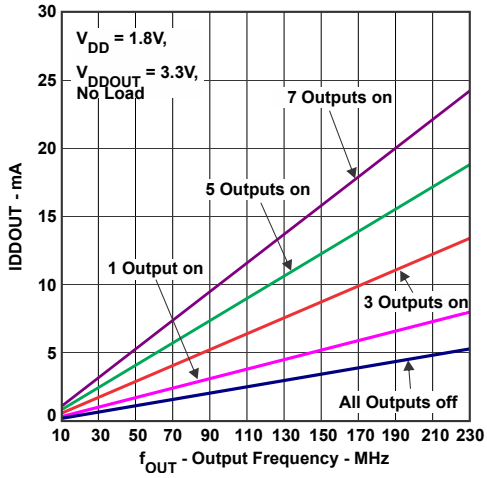

Figure 5-2. CDCE937 Output Current vs Output Frequency

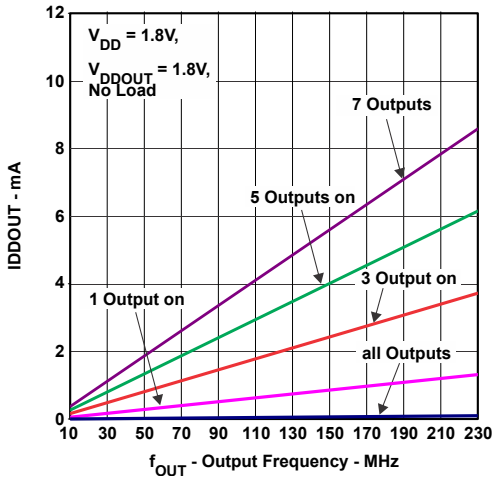

Figure 5-3. CDCEL937 Output Current vs Output Frequency

Copyright © 2024 Texas Instruments Incorporated

6 Parameter Measurement Information

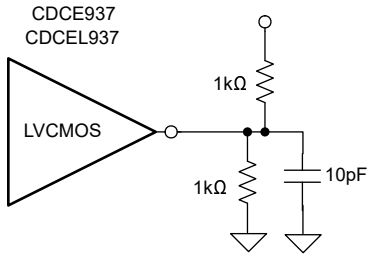

Figure 6-1. Test Load

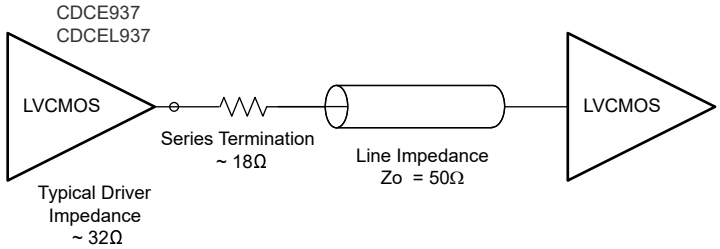

Figure 6-2. Test Load for 50Ω Board Environment

7 Detailed Description

7.1 Overview

The CDCE937 and CDCEL937 devices are modular PLL-based, low-cost, high-performance, programmable clock synthesizers, multipliers, and dividers. The devices generate up to seven output clocks from a single input frequency. Each output can be programmed in-system for any clock frequency up to 230MHz, using one of the three integrated configurable PLLs. The CDCx937 has separate output supply pins, VDDOUT, which is 1.8V for CDCEL937 and 2.5V to 3.3V for CDCE937.

The input accepts an external crystal or LVCMOS clock signal. If an external crystal is used, an on-chip load capacitor is adequate for most applications. The value of the load capacitor is programmable from 0pF to 20pF.

Additionally, a selectable on-chip VCXO allows synchronization of the output frequency to an external control signal, that is, the PWM signal.

The deep M/N divider ratio allows the generation of 0ppm audio/video, networking (WLAN, BlueTooth, Ethernet, GPS) or Interface (USB, IEEE1394, Memory Stick) clocks from a reference input frequency such as 27MHz.

All PLLs supports SSC (Spread-Spectrum Clocking). SSC can be Center-Spread or Down-Spread clocking which is a common technique to reduce electro-magnetic interference (EMI).

Based on the PLL frequency and the divider settings, the internal loop filter components are automatically adjusted to achieve high stability and optimized jitter transfer characteristic of each PLL.

The device supports non-volatile EEPROM programming for ease-customized application. The device is preset to a factory default configuration (see *Default Device Setting*). The device can be reprogrammed to a different application configuration before PCB assembly, or reprogrammed by in-system programming. All device settings are programmable through SDA/SCL bus, a 2-wire serial interface.

Three programmable control inputs, S0, S1 and S2, can be used to control various aspects of operation including frequency selection changing the SSC parameters to lower EMI, PLL bypass, power down, and choosing between low level or 3-state for output-disable function.

The CDCx937 operates in a 1.8V environment. The CDCx937 is characterized for operation from –40°C to 85°C.

Copyright © 2024 Texas Instruments Incorporated

7.2 Functional Block Diagram

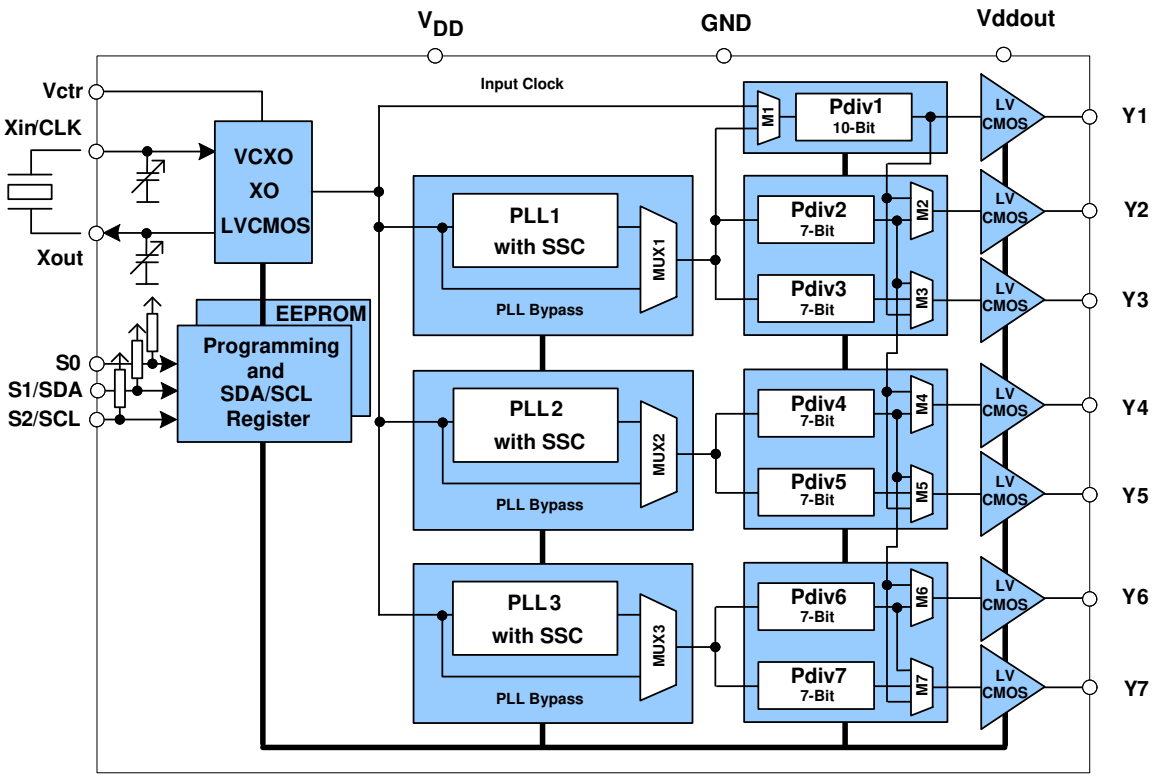

Copyright © 2016, Texas Instruments Incorporated

7.3 Feature Description

7.3.1 Control Terminal Setting

The CDCEx937 has three user-definable control terminals (S0, S1, and S2) which allow external control of device settings. The terminals can be programmed to any of the following setting:

- Spread spectrum clocking selection → spread type and spread amount selection
- Frequency selection → switching between any of two user-defined frequencies
- Output state selection → output configuration and power down control

The user can predefine up to eight different control settings. Table 7-1 and Table 7-2 explain these settings.

Table 7-1. Control Terminal Definition

EXTERNAL CONTROL BITS	PLL1 SETTING			PLL2 SETTING			PLL3 SETTING			Y1 SETTING
Control Function	PLL Frequency Selection	SSC Selection	Output Y2/Y3 Selection	PLL Frequency Selection	SSC Selection	Output Y4/Y5 Selection	PLL Frequency Selection	SSC Selection	Output Y6/Y7 Selection	Output Y1 and Power-Down Selection

Table 7-2. PLLx Setting (Can Be Selected for Each PLL Individual)

SSC SELECTION (CENTER/DOWN)[1]				
SSCx [3-bits]			CENTER	DOWN
0	0	0	0% (off)	0% (off)
0	0	1	±0.25%	–0.25%
0	1	0	±0.5%	–0.5%
0	1	1	±0.75%	–0.75%
1	0	0	±1%	–1%
1	0	1	±1.25%	–1.25%

Table 7-2. PLLx Setting (Can Be Selected for Each PLL Individual) (continued)

SSC SELECTION (CENTER/DOWN)[1]				
SSCx [3-bits]			CENTER	DOWN
1	1	0	±1.5%	–1.5%
1	1	1	±2%	–2%
FREQUENCY SELECTION[2]				
FSx		FUNCTION		
0		Frequency0		
1		Frequency1		
OUTPUT SELECTION[3] (Y2 ... Y7)				
YxYx		FUNCTION		
0		State0		
1		State1		

(1) Center/Down-Spread, Frequency0/1 and State0/1 are user-definable in PLLx Configuration Register
(2) Frequency0 and Frequency1 can be any frequency within the specified f_{VCO} range
(3) State0/1 selection is valid for both outputs of the corresponding PLL module and can be power down, 3-state, low or active

Table 7-3. Y1 Setting [1]

Y1 SELECTION	
Y1	FUNCTION
0	State 0
1	State 1

(1) State0 and State1 are user definable in Generic Configuration Register and can be power down, 3-state, low, or active.

S1/SDA and S2/SCL pins of the CDCEx937 are dual function pins. In default configuration the pins are defined as SDA/SCL for the serial interface. The pins can be programmed as control-pins (S1/S2) by setting the relevant bits in the EEPROM. Note that the changes to the Control register (Bit [6] of Byte [02]) have no effect until the pins are written into the EEPROM.

Once the pins are set as control pins, the serial programming interface is no longer available. However, if V_{DDOUT} is forced to GND, the two control-pins, S1 and S2, temporally act as serial programming pins (SDA/SCL).

S0 is not a multi-use pin, the pin is a control pin only.

7.3.2 Default Device Setting

The internal EEPROM of CDCEx937 is preconfigured as shown in Figure 7-1. (The input frequency is passed through to the output as a default.) This allows the device to operate in default mode without the extra production step of programming. The default setting appears after power is supplied or after power-down or power-up sequence until the settings are reprogrammed by the user to a different application configuration. A new register setting is programmed through the serial SDA/SCL Interface

Copyright © 2024 Texas Instruments Incorporated

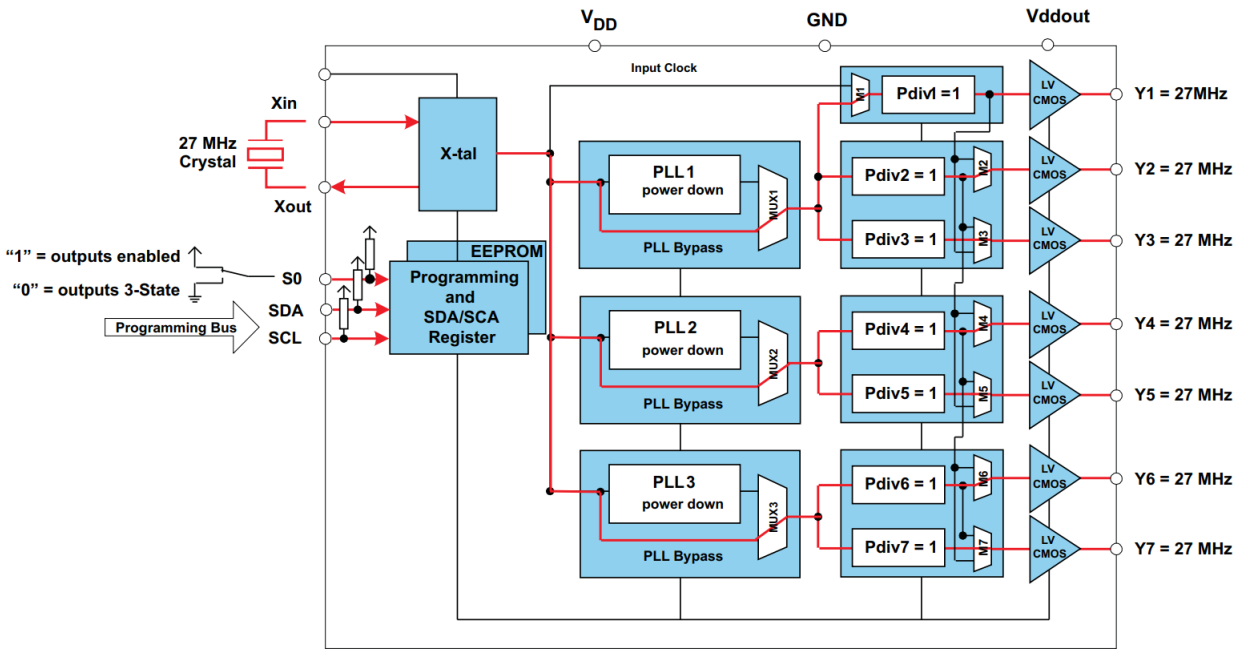

Figure 7-1. Default Device Setting

Table 7-4 shows the factory default setting for the Control Terminal Register (external control pins). In normal operation, all 8 register settings are available, but in the default configuration only the first two settings (0 and 1) can be selected with S0, as S1 and S2 configured as programming pins in default mode.

Table 7-4. Factory Default Setting for Control Terminal Register (1)

			Y1	PLL1 SETTINGS			PLL2 SETTINGS			PLL3 SETTINGS		
EXTERNAL CONTROL PINS			OUTPUT SELECTION	FREQUENCY SELECTION	SSC SELECTION	OUTPUT SELECTION	FREQUENCY SELECTION	SSC SELECTION	OUTPUT SELECTION	FREQUENCY SELECTION	SSC SELECTION	OUTPUT SELECTION
S2	*S1*	**S0**	**Y1**	*FS1*	*SSC1*	**Y2Y3**	***FS2***	***SSC2***	**Y4Y5**	***FS3***	***SSC3***	**Y6Y7**
SCL (I2C)	SDA (I2C)	**0**	**3-state**	f_{VCO1_0}	off	**3-state**	f_{VCO2_0}	off	**3-state**	f_{VCO3_0}	off	**3-state**
SCL (I2C)	SDA (I2C)	**1**	**enabled**	f_{VCO1_0}	off	**enabled**	f_{VCO2_0}	off	**enabled**	f_{VCO3_0}	off	**enabled**

(1) In default mode or when programmed respectively, S1 and S2 act as serial programming interface, SDA/SCL. S1 and S2 do not have any control-pin function but S1 and S2 are internally interpreted as if S1=0 and S2=0. However, S0 is a control-pin which in the default mode switches all outputs ON or OFF (as previously predefined).

7.3.3 SDA/SCL Serial Interface

The CDCEx937 operates as a target device of the 2-wire serial SDA/SCL bus, compatible with the popular SMBus or I^2C specification. The device operates in the standard-mode transfer (up to 100 kbit/s) and fast-mode transfer (up to 400kbit/s) and supports 7-bit addressing.

The S1/SDA and S2/SCL pins of the CDC9xx are dual function pins. In the default configuration the pins are used as SDA/SCL serial programming interface. The pins can be reprogrammed as general purpose control pins, S1 and S2, by changing the corresponding EEPROM setting, Byte 02, Bit [6].

Copyright © 2024 Texas Instruments Incorporated

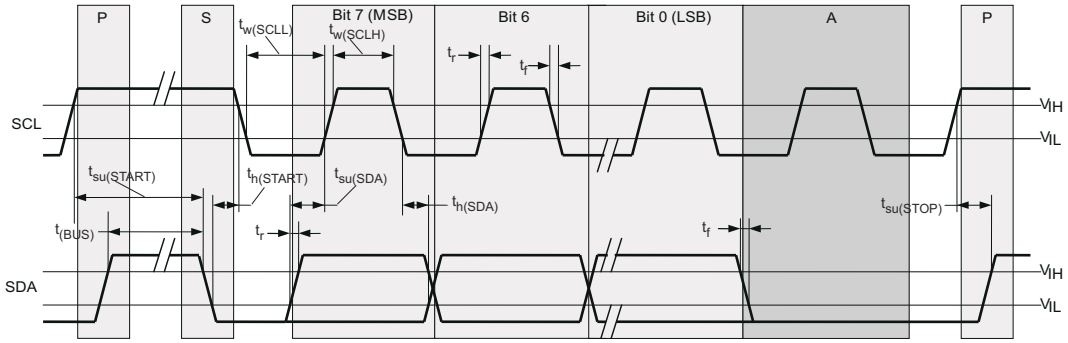

Figure 7-2. Timing Diagram for SDA/SCL Serial Control Interface

7.3.4 Data Protocol

The device supports *Byte Write and Byte Read* and *Block Write and Block Read* operations.

For *Byte Write/Read* operations, the system controller can individually access addressed bytes.

For *Block Write/Read* operations, the bytes are accessed in sequential order from lowest to highest byte (with most significant bit first) with the ability to stop after any complete byte has been transferred. The numbers of Bytes read-out are defined by Byte Count in the Generic Configuration Register. At Block Read instruction all bytes defined in the Byte Count has to be readout to correctly finish the read cycle.

Once a byte has been sent, the byte is written into the internal register and is effective immediately. This applies to each transferred byte independent of whether this is a *Byte Write* or a *Block Write* sequence.

If the EEPROM write cycle is initiated, the internal registers are written into the EEPROM. Data can be read out during the programming sequence (Byte Read or Block Read). The programming status can be monitored by EEPIP, byte 01h–bit 6. Before beginning EEPROM programming, pull CLKIN LOW. CLKIN must be held LOW for the duration of EEPROM programming. After initiating EEPROM programming with EEWRITE, byte 06h-bit 0, do not write to the device registers until EEPIP is read back as a 0.

The offset of the indexed byte is encoded in the command code, as described in Target Receiver Address (7 Bits).

Table 7-5. Target Receiver Address (7 Bits)

DEVICE	A6	A5	A4	A3	A2	A1[(1)]	A0[(1)]	R/ $\overline{W}$
CDCEx913	1	1	0	0	1	0	1	1/0
CDCEx925	1	1	0	0	1	0	0	1/0
CDCEx937	1	1	0	1	1	0	1	1/0
CDCEx949	1	1	0	1	1	0	0	1/0

(1) Address bits A0 and A1 are programmable through the SDA/SCL bus (Byte 01, Bit [1:0]). This allows addressing up to 4 devices connected to the same SDA/SCL bus. The least-significant bit of the address byte designates a write or read operation.

7.4 Device Functional Modes

7.4.1 SDA/SCL Hardware Interface

Figure 7-3 shows how the CDCEx937 clock synthesizer is connected to the SDA/SCL serial interface bus. Multiple devices can be connected to the bus but the speed can require reduction (400kHz is the maximum) if many devices are connected.

Note that the pullup resistors (R_P) depends on the supply voltage, bus capacitance, and number of connected devices. The recommended pullup value is 4.7kΩ. The pullup value must meet the minimum sink current of 3mA at
V_{OLmax} = 0.4V for the output stages (for more details, see SMBus or I^2C Bus specification).

Copyright © 2024 Texas Instruments Incorporated

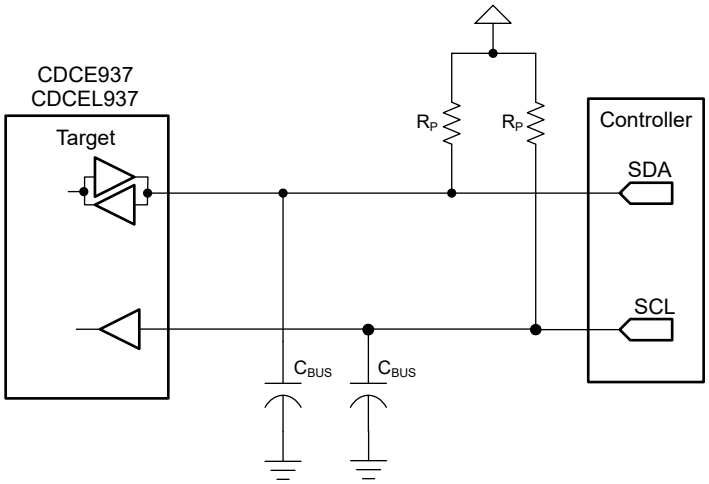

Figure 7-3. SDA/SCL Hardware Interface

7.5 Programming

Table 7-6. Command Code Definition

BIT	DESCRIPTION
7	0 = *Block Read* or *Block Write* operation 1 = *Byte Read* or *Byte Write* operation
(6:0)	Byte Offset for *Byte Read*, *Block Read*, *Byte Write* and *Block Write* operation.

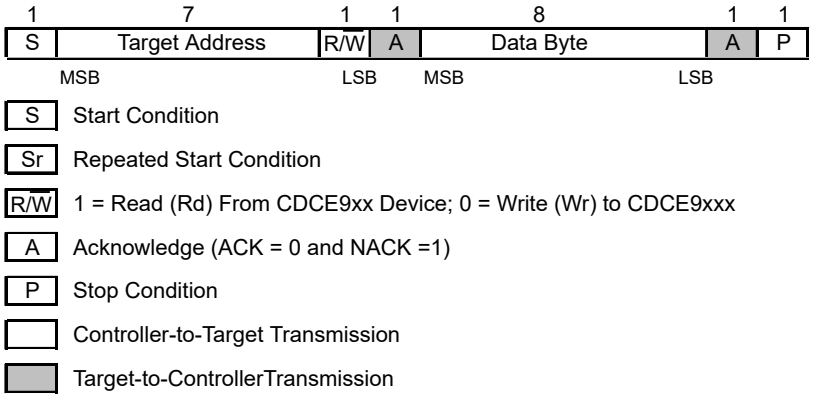

Figure 7-4. Generic Programming Sequence

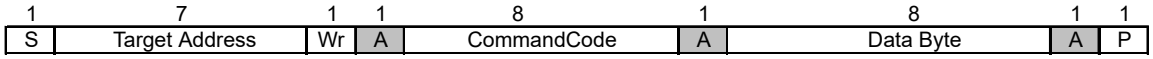

Figure 7-5. Byte Write Protocol

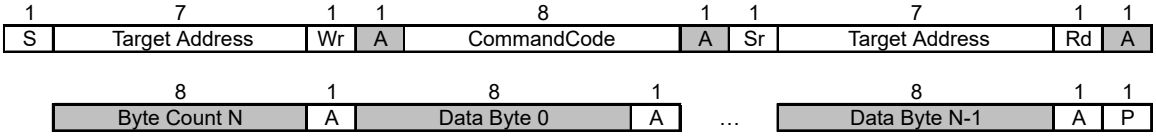

Figure 7-6. Byte Read Protocol

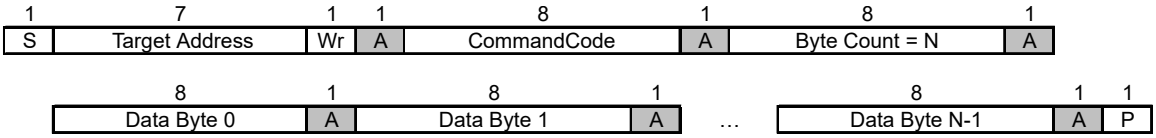

Data byte 0 bits [7:0] is reserved for Revision Code and Vendor Identification. The data byte is also used for internal test purposes and must not be overwritten.

Figure 7-7. Block Write Protocol

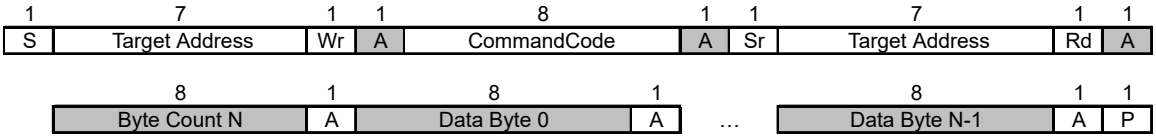

Figure 7-8. Block Read Protocol

8 Register Maps

8.1 SDA/SCL Configuration Registers

The clock input, control pins, PLLs, and output stages are user configurable. The following tables and explanations describe the programmable functions of the CDCEx937. All settings can be manually written into the device through the SDA/SCL bus or easily programmed by using the TI Pro-Clock™ software. TI Pro-Clock™ software allows the user to quickly make all settings and automatically calculates the values for optimized performance at lowest jitter.

Table 8-1. SDA and SCL Registers

ADDRESS OFFSET	REGISTER DESCRIPTION	TABLE
00h	Generic Configuration Register	Table 8-3
10h	PLL1 Configuration Register	Table 8-4
20h	PLL2 Configuration Register	Table 8-5
30h	PLL3 Configuration Register	Table 8-6

The gray-highlighted bits, described in the Configuration Registers tables in the following pages, belong to the Control Terminal Register. The user can predefine up to eight different control settings. These settings then can be selected by the external control pins, S0, S1, and S2 (see *Control Terminal Setting*).

Table 8-2. Configuration Register, External Control Terminals

				Y1	PLL1 SETTINGS			PLL2 SETTINGS			PLL3 SETTINGS		
	EXTERNAL CONTROL PINS			OUTPUT SELECTION	FREQ. SELECTION	SSC SELECTION	OUTPUT SELECTION	FREQ. SELECTION	SSC SELECTION	OUTPUT SELECTION	FREQ. SELECTION	SSC SELECTION	OUTPUT SELECTION
	S2	S1	S0	Y1	FS1	SSC1	Y2Y3	FS2	SSC2	Y4Y5	FS3	SSC3	Y6Y7
0	0	0	0	Y1_0	FS1_0	SSC1_0	Y2Y3_0	FS2_0	SSC2_0	Y4Y5_0	FS3_0	SSC3_0	Y6Y7_0
1	0	0	1	Y1_1	FS1_1	SSC1_1	Y2Y3_1	FS2_1	SSC2_1	Y4Y5_1	FS3_1	SSC3_1	Y6Y7_1
2	0	1	0	Y1_2	FS1_2	SSC1_2	Y2Y3_2	FS2_2	SSC2_2	Y4Y5_2	FS3_2	SSC3_2	Y6Y7_2
3	0	1	1	Y1_3	FS1_3	SSC1_3	Y2Y3_3	FS2_3	SSC2_3	Y4Y5_3	FS3_3	SSC3_3	Y6Y7_3
4	1	0	0	Y1_4	FS1_4	SSC1_4	Y2Y3_4	FS2_4	SSC2_4	Y4Y5_4	FS3_4	SSC3_4	Y6Y7_4
5	1	0	1	Y1_5	FS1_5	SSC1_5	Y2Y3_5	FS2_5	SSC2_5	Y4Y5_5	FS3_5	SSC3_5	Y6Y7_5
6	1	1	0	Y1_6	FS1_6	SSC1_6	Y2Y3_6	FS2_6	SSC2_6	Y4Y5_6	FS3_6	SSC3_6	Y6Y7_6
7	1	1	1	Y1_7	FS1_7	SSC1_7	Y2Y3_7	FS2_7	SSC2_7	Y4Y5_7	FS3_7	SSC3_7	Y6Y7_7
	Address Offset(1)			04h	13h	10h–12h	15h	23h	20h–22h	25h	33h	30h–32h	35h

(1) Address Offset refers to the byte address in the Configuration Register in the following pages.

Copyright © 2024 Texas Instruments Incorporated

Table 8-3. Generic Configuration Register

OFFSET[1]	BIT[2]	ACRONYM	DEFAULT[3]	DESCRIPTION
00h	7	E_EL	Xb	Device identification (read-only): 1 is CDCE937 (3.3V), 0 is CDCEL937 (1.8V)
	6:4	RID	Xb	Revision Identification Number (read only)
	3:0	VID	1h	Vendor Identification Number (read only)
01h	7	–	0b	Reserved – always write 0
	6	EEPIP	0b	EEPROM Programming Status:[4] (read only) 0 – EEPROM programming is completed 1 – EEPROM is in programming mode
	5	EELOCK	0b	Permanently Lock EEPROM Data[5] 0 – EEPROM is not locked 1 – EEPROM is permanently locked
	4	PWDN	0b	Device Power Down (overwrites S0/S1/S2 setting; configuration register settings are unchanged) Note: PWDN cannot be set to 1 in the EEPROM. 0 – device active (PLL1 and all outputs are enabled) 1 – device power down (PLL1 in power down and all outputs in 3-state)
	3:2	INCLK	00b	Input clock selection: 00 – Xtal 01 – VCXO 10 – LVCMOS 11 – reserved
	1:0	I2C_ADR	00b	Programmable Address Bits A0 and A1 of the Target Receiver Address
02h	7	M1	1b	Clock source selection for output Y1: 0 – input clock 1 – PLL1 clock
	6	SPICON	0b	Operation mode selection for pin 18/19[6] 0 – serial programming interface SDA (pin 19) and SCL (pin 18) 1 – control pins S1 (pin 19) and S2 (pin 18)
	5:4	Y1_ST1	11b	Y1-State0/1 Definition
	3:2	Y1_ST0	01b	00 – device power down (all PLLs in power down and all outputs in 3-State) 10 – Y1 disabled to low 01 – Y1 disabled to 3-state 11 – Y1 enabled
	1:0	Pdiv1 [9:8]	2h	10-Bit Y1-Output-Divider Pdiv1: 0 – divider reset and stand-by 1-to-1023 – divider value
03h	7:0	Pdiv1 [7:0]		
04h	7	Y1_7	0b	Y1_ST0/Y1_ST1 State Selection[7] 0 – State0 (predefined by Y1_ST0) 1 – State1 (predefined by Y1_ST1)
	6	Y1_6	0b	
	5	Y1_5	0b	
	4	Y1_4	0b	
	3	Y1_3	0b	
	2	Y1_2	0b	
	1	Y1_1	1b	
	0	Y1_0	0b	
05h	7:3	XCSEL	0Ah	Crystal Load Capacitor Selection[8] 00h → 0pF 01h → 1pF 02h → 2pF : 14h-to-1Fh → 20pF
	2:0		0b	Reserved – do not write other than 0
06h	7:1	BCOUNT	40h	7-Bit Byte Count (defines the number of bytes which is sent from this device at the next Block Read transfer); all bytes have to be read out to correctly finish the read cycle.)
	0	EEWRITE	0b	Initiate EEPROM Write Cycle[4] [9] 0– no EEPROM write cycle 1 – start EEPROM write cycle (internal configuration register is saved to the EEPROM)
07h-0Fh		—	0h	Unused address range

(1) Writing data beyond '40h' can affect device function.
(2) All data transferred with the MSB first.
(3) Unless customer-specific setting.
(4) During EEPROM programming, no data is allowed to be sent to the device through the SDA/SCL bus until the programming sequence is completed. However, data can be read out during the programming sequence (Byte Read or Block Read).
(5) If this bit is set to high in the EEPROM, the actual data in the EEPROM is permanently locked. There is no further programming possible. However, data can still be written through the SDA/SCL bus to the internal register to change device function on the fly. New data can no longer be saved to the EEPROM. EELOCK is effective only if written into the EEPROM.
(6) Selection of control pins is effective only if written into the EEPROM. Once written into the EEPROM, the serial programming pins are no longer available. However, if V_{DDOUT} is forced to GND, the two control pins, S1 and S2, temporally act as serial programming pins (SDA/SCL), and the two target receiver address bits are reset to A0 = *0* and A1 = *0*.
(7) These are the bits of the Control Terminal Register. The user can predefine up to eight different control settings. These settings then can be selected by the external control pins, S0, S1, and S2.

Copyright © 2024 Texas Instruments Incorporated

(8) The internal load capacitor (C1, C2) has to be used to achieve the best clock performance. External capacitors must be used only to finely adjust C_L by a few pFs. The value of C_L can be programmed with a resolution of 1pF for a crystal load range of 0pF to 20pF. For C_L > 20pF, use additional external capacitors. Also, the value of the device input capacitance has to be considered which always adds 1.5pF (6pF//2pF) to the selected C_L. For more information about VCXO configuration and crystal recommendation, see *VCXO Application Guideline for CDCE(L)9xx Family* (SCAA085).

(9) Note: The EEPROM WRITE bit must be sent last. This verifies that the content of all internal registers are stored in the EEPROM. The EEWRITE cycle is initiated with the rising edge of the EEWRITE bit. A static level high does not trigger an EEPROM WRITE cycle. The EEWRITE bit has to be reset to low after the programming is completed. The programming status can be monitored by reading out EEPIP. If EELOCK is set to high, no EEPROM programming is possible.

Table 8-4. PLL1 Configuration Register

OFFSET(1)	BIT(2)	ACRONYM	DEFAULT(3)	DESCRIPTION
10h	7:5	SSC1_7 [2:0]	000b	SSC1: PLL1 SSC Selection (Modulation Amount)(4) **Down** / **Center** 000 (off) / 000 (off) 001 – 0.25% / 001 ± 0.25% 010 – 0.5% / 010 ± 0.5% 011 – 0.75% / 011 ± 0.75% 100 – 1.0% / 100 ± 1.0% 101 – 1.25% / 101 ± 1.25% 110 – 1.5% / 110 ± 1.5% 111 – 2.0% / 111 ± 2.0%
	4:2	SSC1_6 [2:0]	000b	
	1:0	SSC1_5 [2:1]	000b	
11h	7	SSC1_5 [0]		
	6:4	SSC1_4 [2:0]	000b	
	3:1	SSC1_3 [2:0]	000b	
	0	SSC1_2 [2]	000b	
12h	7:6	SSC1_2 [1:0]		
	5:3	SSC1_1 [2:0]	000b	
	2:0	SSC1_0 [2:0]	000b	
13h	7	FS1_7	0b	FS1_x: PLL1 Frequency Selection(4) 0 – f_{VCO1_0} (predefined by PLL1_0 – Multiplier/Divider value) 1 – f_{VCO1_1} (predefined by PLL1_1 – Multiplier/Divider value)
	6	FS1_6	0b	
	5	FS1_5	0b	
	4	FS1_4	0b	
	3	FS1_3	0b	
	2	FS1_2	0b	
	1	FS1_1	0b	
	0	FS1_0	0b	
14h	7	MUX1	0b	PLL1 Multiplexer: 0 – PLL1 1 – PLL1 Bypass (PLL1 is in power down)
	6	M2	1b	Output Y2 Multiplexer: 0 – Pdiv1 1 – Pdiv2
	5:4	M3	10b	Output Y3 Multiplexer: 00 – Pdiv1-Divider 01 – Pdiv2-Divider 10 – Pdiv3-Divider 11 – reserved
	3:2	Y2Y3_ST1	11b	Y2, Y3-State0/1definition: 00 – Y2/Y3 disabled to 3-State (PLL1 is in power down) 01 – Y2/Y3 disabled to 3-State 10–Y2/Y3 disabled to low 11 – Y2/Y3 enabled
	1:0	Y2Y3_ST0	01b	
15h	7	Y2Y3_7	0b	Y2Y3_x Output State Selection(4) 0 – state0 (predefined by Y2Y3_ST0) 1 – state1 (predefined by Y2Y3_ST1)
	6	Y2Y3_6	0b	
	5	Y2Y3_5	0b	
	4	Y2Y3_4	0b	
	3	Y2Y3_3	0b	
	2	Y2Y3_2	0b	
	1	Y2Y3_1	1b	
	0	Y2Y3_0	0b	
16h	7	SSC1DC	0b	PLL1 SSC down/center selection: 0 – down 1 – center
	6:0	Pdiv2	08h	7-Bit Y2-Output-Divider Pdiv2: 0 – reset and stand-by 1-to-127 is divider value
17h	7	—	0b	Reserved – do not write others than 0
	6:0	Pdiv3	04h	7-Bit Y3-Output-Divider Pdiv3: 0 – reset and stand-by 1-to-127 is divider value

Copyright © 2024 Texas Instruments Incorporated

Table 8-4. PLL1 Configuration Register (continued)

OFFSET[1]	BIT[2]	ACRONYM	DEFAULT[3]	DESCRIPTION
18h	7:0	PLL1_0N [11:4]	E10h	PLL1_0[5]: 30-Bit Multiplier/Divider value for frequency f_{VCO1_0} (for more information, see *PLL Frequency Planning*).
19h	7:4	PLL1_0N [3:0]		
	3:0	PLL1_0R [8:5]	132h	
1Ah	7:3	PLL1_0R[4:0]		
	2:0	PLL1_0Q [5:3]	1Dh	
1Bh	7:5	PLL1_0Q [2:0]		
	4:2	PLL1_0P [2:0]	010b	
	1:0	VCO1_0_RANGE	11b	f_{VCO1_0} range selection: 00 – f_{VCO1_0} < 125MHz 01 – 125MHz ≤ f_{VCO1_0} < 150MHz 10 – 150MHz ≤ f_{VCO1_0} < 175MHz 11 – f_{VCO1_0} ≥ 175MHz
1Ch	7:0	PLL1_1N [11:4]	E10h	PLL1_1[5]: 30-Bit Multiplier/Divider value for frequency f_{VCO1_1} (for more information see *PLL Frequency Planning*).
1Dh	7:4	PLL1_1N [3:0]		
	3:0	PLL1_1R [8:5]	132h	
1Eh	7:3	PLL1_1R[4:0]		
	2:0	PLL1_1Q [5:3]	1Dh	
1Fh	7:5	PLL1_1Q [2:0]		
	4:2	PLL1_1P [2:0]	010b	
	1:0	VCO1_1_RANGE	00b	f_{VCO1_1} range selection: 00 – f_{VCO1_1} < 125MHz 01 – 125MHz ≤ f_{VCO1_1} < 150MHz 10 – 150MHz ≤ f_{VCO1_1} < 175MHz 11 – f_{VCO1_1} ≥ 175MHz

(1) Writing data beyond 40h can adversely affect device function.
(2) All data is transferred MSB-first.
(3) Unless a custom setting is used.
(4) The user can predefine up to eight different control settings. In normal device operation, these settings can be selected by the external control pins, S0, S1, and S2.
(5) PLL settings limits: 16 ≤ q ≤ 63, 0 ≤ p ≤ 7, 0 ≤ r ≤ 511, 0 < N < 4096.

Table 8-5. PLL2 Configuration Register

OFFSET[1]	BIT[2]	ACRONYM	DEFAULT[3]	DESCRIPTION
20h	7:5	SSC2_7 [2:0]	000b	SSC2: PLL2 SSC Selection (Modulation Amount)[4] **Down** / **Center** 000 (off) / 000 (off) 001 – 0.25% / 001 ± 0.25% 010 – 0.5% / 010 ± 0.5% 011 – 0.75% / 011 ± 0.75% 100 – 1.0% / 100 ± 1.0% 101 – 1.25% / 101 ± 1.25% 110 – 1.5% / 110 ± 1.5% 111 – 2.0% / 111 ± 2.0%
	4:2	SSC2_6 [2:0]	000b	
	1:0	SSC2_5 [2:1]	000b	
21h	7	SSC2_5 [0]		
	6:4	SSC2_4 [2:0]	000b	
	3:1	SSC2_3 [2:0]	000b	
	0	SSC2_2 [2]	000b	
22h	7:6	SSC2_2 [1:0]		
	5:3	SSC2_1 [2:0]	000b	
	2:0	SSC2_0 [2:0]	000b	
23h	7	FS2_7	0b	FS2_x: PLL2 Frequency Selection[4] 0 – f_{VCO2_0} (predefined by PLL2_0 – Multiplier/Divider value) 1 – f_{VCO2_1} (predefined by PLL2_1 – Multiplier/Divider value)
	6	FS2_6	0b	
	5	FS2_5	0b	
	4	FS2_4	0b	
	3	FS2_3	0b	
	2	FS2_2	0b	
	1	FS2_1	0b	
	0	FS2_0	0b	

Table 8-5. PLL2 Configuration Register (continued)

OFFSET[1]	BIT[2]	ACRONYM	DEFAULT[3]	DESCRIPTION
24h	7	MUX2	0b	PLL2 Multiplexer: 0 – PLL2 1 – PLL2 Bypass (PLL2 is in power down)
	6	M4	1b	Output Y4 Multiplexer: 0 – Pdiv2 1 – Pdiv4
	5:4	M5	10b	Output Y5 Multiplexer: 00 – Pdiv2-Divider 01 – Pdiv4-Divider 10 – Pdiv5-Divider 11 – reserved
	3:2	Y4Y5_ST1	11b	Y4, Y5-State0/1definition: 00 – Y4/Y5 disabled to 3-State (PLL2 is in power down) 01 – Y4/Y5 disabled to 3-State 10–Y4/Y5 disabled to low 11 – Y4/Y5 enabled
	1:0	Y4Y5_ST0	01b	
25h	7	Y4Y5_7	0b	Y4Y5_x Output State Selection[4] 0 – state0 (predefined by Y4Y5_ST0) 1 – state1 (predefined by Y4Y5_ST1)
	6	Y4Y5_6	0b	
	5	Y4Y5_5	0b	
	4	Y4Y5_4	0b	
	3	Y4Y5_3	0b	
	2	Y4Y5_2	0b	
	1	Y4Y5_1	1b	
	0	Y4Y5_0	0b	
26h	7	SSC2DC	0b	PLL2 SSC down/center selection: 0 – down 1 – center
	6:0	Pdiv4	05h	7-Bit Y4-Output-Divider Pdiv4: 0 – reset and stand-by 1-to-127 – divider value
27h	7	—	0b	Reserved – do not write others than 0
	6:0	Pdiv5	05h	7-Bit Y5-Output-Divider Pdiv5: 0 – reset and stand-by 1-to-127 – divider value
28h	7:0	PLL2_0N [11:4	E58h	PLL2_0[5]: 30-Bit Multiplier/Divider value for frequency f_{VCO2_0} (for more information see *PLL Frequency Planning*).
29h	7:4	PLL2_0N [3:0]		
	3:0	PLL2_0R [8:5]	198h	
2Ah	7:3	PLL2_0R[4:0]		
	2:0	PLL2_0Q [5:3]	1Ch	
2Bh	7:5	PLL2_0Q [2:0]		
	4:2	PLL2_0P [2:0]	010b	
	1:0	VCO2_0_RANGE	11b	f_{VCO2_0} range selection: 00 – f_{VCO2_0} < 125MHz 01 – 125MHz ≤ f_{VCO2_0} < 150MHz 10 – 150MHz ≤ f_{VCO2_0} < 175MHz 11 – f_{VCO2_0} ≥ 175MHz
2Ch	7:0	PLL2_1N [11:4]	E58h	PLL2_1[5]: 30-Bit Multiplier/Divider value for frequency f_{VCO2_1} (for more information see *PLL Frequency Planning*).
2Dh	7:4	PLL2_1N [3:0]		
	3:0	PLL2_1R [8:5]	198h	
2Eh	7:3	PLL2_1R[4:0]		
	2:0	PLL2_1Q [5:3]	1Ch	
2Fh	7:5	PLL2_1Q [2:0]		
	4:2	PLL2_1P [2:0]	010b	
	1:0	VCO2_1_RANGE	00b	f_{VCO2_1} range selection: 00 – f_{VCO2_1} < 125MHz 01 – 125MHz ≤ f_{VCO2_1} < 150MHz 10 – 150MHz ≤ f_{VCO2_1} < 175MHz 11 – f_{VCO2_1} ≥ 175MHz

(1) Writing data beyond 40h can adversely affect device function.
(2) All data is transferred MSB-first.
(3) Unless a custom setting is used.
(4) The user can predefine up to eight different control settings. In normal device operation, these settings can be selected by the external control pins, S0, S1, and S2.
(5) PLL settings limits: 16 ≤ q ≤ 63, 0 ≤ p ≤ 7, 0 ≤ r ≤ 511, 0 < N < 4096.

Copyright © 2024 Texas Instruments Incorporated

Table 8-6. PLL3 Configuration Register

OFFSET[1]	BIT[2]	ACRONYM	DEFAULT[3]	DESCRIPTION
30h	7:5	SSC3_7 [2:0]	000b	SSC3: PLL3 SSC Selection (Modulation Amount)[4] **Down**: 000 (off), 001 – 0.25%, 010 – 0.5%, 011 – 0.75%, 100 – 1.0%, 101 – 1.25%, 110 – 1.5%, 111 – 2.0% **Center**: 000 (off), 001 ± 0.25%, 010 ± 0.5%, 011 ± 0.75%, 100 ± 1.0%, 101 ± 1.25%, 110 ± 1.5%, 111 ± 2.0%
	4:2	SSC3_6 [2:0]	000b	
	1:0	SSC3_5 [2:1]	000b	
31h	7	SSC3_5 [0]		
	6:4	SSC3_4 [2:0]	000b	
	3:1	SSC3_3 [2:0]	000b	
	0	SSC3_2 [2]	000b	
32h	7:6	SSC3_2 [1:0]		
	5:3	SSC3_1 [2:0]	000b	
	2:0	SSC3_0 [2:0]	000b	
33h	7	FS3_7	0b	FS3_x: PLL3 Frequency Selection[4] 0 – f_{VCO3_0} (predefined by PLL3_0 – Multiplier/Divider value) 1 – f_{VCO3_1} (predefined by PLL3_1 – Multiplier/Divider value)
	6	FS3_6	0b	
	5	FS3_5	0b	
	4	FS3_4	0b	
	3	FS3_3	0b	
	2	FS3_2	0b	
	1	FS3_1	0b	
	0	FS3_0	0b	
34h	7	MUX3	0b	PLL3 Multiplexer: 0 – PLL3 1 – PLL3 Bypass (PLL3 is in power down)
	6	M6	1b	Output Y6 Multiplexer: 0 – Pdiv4 1 – Pdiv6
	5:4	M7	10b	Output Y7 Multiplexer: 00 – Pdiv4-Divider 01 – Pdiv6-Divider 10 – Pdiv7-Divider 11 – reserved
	3:2	Y6Y7_ST1	11b	Y6, Y7-State0/1definition: 00 – Y6/Y7 disabled to 3-State and PLL3 power down 01 – Y6/Y7 disabled to 3-State 10 –Y6/Y7 disabled to low 11 – Y6/Y7 enabled
	1:0	Y6Y7_ST0	01b	
35h	7	Y6Y7_7	0b	Y6Y7_x Output State Selection[4] 0 – state0 (predefined by Y6Y7_ST0) 1 – state1 (predefined by Y6Y7_ST1)
	6	Y6Y7_6	0b	
	5	Y6Y7_5	0b	
	4	Y6Y7_4	0b	
	3	Y6Y7_3	0b	
	2	Y6Y7_2	0b	
	1	Y6Y7_1	1b	
	0	Y6Y7_0	0b	
36h	7	SSC3DC	0b	PLL3 SSC down/center selection: 0 – down 1 – center
	6:0	Pdiv6	09h	7-Bit Y6-Output-Divider Pdiv6: 0 – reset and stand-by 1-to-127 – divider value
37h	7	—	0b	Reserved – do not write others than 0
	6:0	Pdiv7	04h	7-Bit Y7-Output-Divider Pdiv7: 0 – reset and stand-by 1-to-127 – divider value
38h	7:0	PLL3_0N [11:4]	FF8h	PLL3_0[5]: 30-Bit Multiplier/Divider value for frequency f_{VCO3_0} (for more information, see *PLL Frequency Planning*).
39h	7:4	PLL3_0N [3:0]		
	3:0	PLL3_0R [8:5]	000h	
3Ah	7:3	PLL3_0R[4:0]		
	2:0	PLL3_0Q [5:3]	10h	
3Bh	7:5	PLL3_0Q [2:0]		
	4:2	PLL3_0P [2:0]	001b	
	1:0	VCO3_0_RANGE	11b	f_{VCO3_0} range selection: 00 – f_{VCO3_0} < 125MHz 01 – 125MHz ≤ f_{VCO3_0} < 150MHz 10 – 150MHz ≤ f_{VCO3_0} < 175MHz 11 – f_{VCO3_0} ≥ 175MHz

Copyright © 2024 Texas Instruments Incorporated

Table 8-6. PLL3 Configuration Register (continued)

OFFSET(1)	BIT(2)	ACRONYM	DEFAULT(3)	DESCRIPTION
3Ch	7:0	PLL3_1N [11:4]	FF8h	PLL3_1(5): 30-Bit Multiplier/Divider value for frequency f_{VCO3_1} (for more information, see *PLL Frequency Planning*).
3Dh	7:4	PLL3_1N [3:0]		
	3:0	PLL3_1R [8:5]	000h	
3Eh	7:3	PLL3_1R[4:0]		
	2:0	PLL3_1Q [5:3]	10h	
3Fh	7:5	PLL3_1Q [2:0]		
	4:2	PLL3_1P [2:0]	001b	
	1:0	VCO3_1_RANGE	00b	f_{VCO3_1} range selection: 00 – f_{VCO3_1} < 125MHz 01 – 125MHz ≤ f_{VCO3_1} < 150MHz 10 – 150MHz ≤ f_{VCO3_1} < 175MHz 11 – f_{VCO3_1} ≥ 175MHz

(1) Writing data beyond 40h can affect device function.
(2) All data is transferred MSB-first.
(3) Unless a custom setting is used.
(4) These are the bits of the Control Terminal Register. The user can pre-define up to eight different control settings. At normal device operation, these setting can be selected by the external control pins, S0, S1, and S2.
(5) PLL settings limits: 16 ≤ q ≤ 63, 0 ≤ p ≤ 7, 0 ≤ r ≤ 511, 0 < N < 4096.

9 Application and Implementation

Note

Information in the following applications sections is not part of the TI component specification, and TI does not warrant its accuracy or completeness. TI's customers are responsible for determining suitability of components for their purposes, as well as validating and testing their design implementation to confirm system functionality.

9.1 Application Information

The CDCEx937 device is an easy-to-use, high-performance, programmable CMOS clock synthesizer. It can be used as a crystal buffer, clock synthesizer with separate output supply pin. The CDCEx937 features an on-chip loop filter and spread-spectrum modulation. Programming can be done through SPI, pin-mode, or using on-chip EEPROM. The following section shows some examples of using CDCEx937 in various applications.

9.2 Typical Application

Figure 9-1 shows the use of the CDCEx937 devices for replacement of crystals and crystal oscillators on a Gigabit Ethernet Switch application.

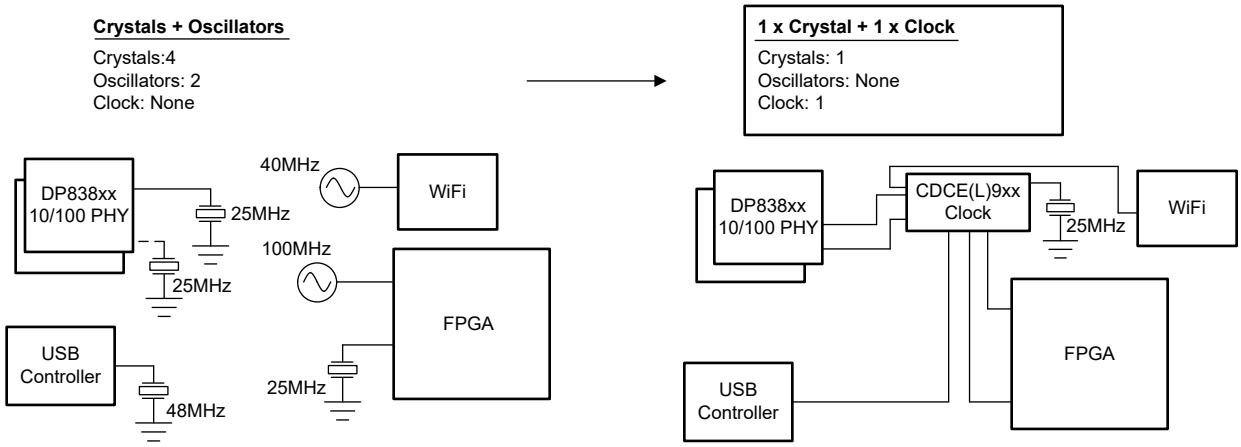

Figure 9-1. Crystal and Oscillator Replacement Example

Copyright © 2024 Texas Instruments Incorporated

9.2.1 Design Requirements

CDCEx937 supports spread-spectrum clocking (SSC) with multiple control parameters:

- Modulation amount (%)
- Modulation frequency (>20 kHz)
- Modulation shape (triangular)
- Center spread / down spread (± or –)

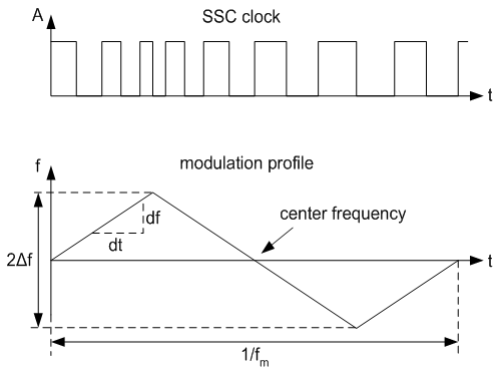

Figure 9-2. Modulation Frequency (fm) and Modulation Amount

9.2.2 Detailed Design Procedure

9.2.2.1 Spread Spectrum Clock (SSC)

Spread-spectrum modulation is a method to spread emitted energy over a larger bandwidth. In clocking, spread spectrum can reduce Electromagnetic Interference (EMI) by reducing the level of emission from clock distribution network.

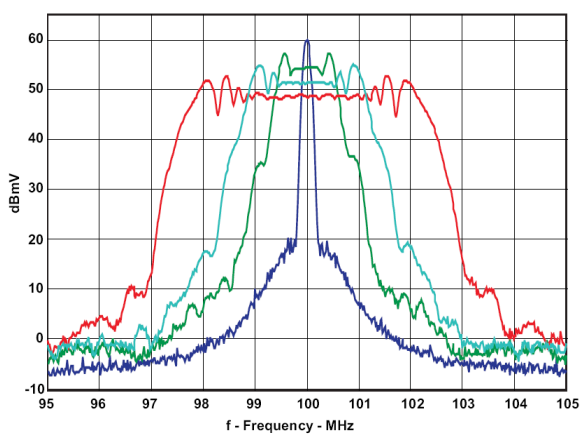

CDCS502 with a 25MHz Crystal, FS = 1, Fout = 100MHz, and 0%, ±0.5, ±1%, and ±2% SSC

Figure 9-3. Comparison Between Typical Clock Power Spectrum and Spread-Spectrum Clock

9.2.2.2 PLL Frequency Planning

At a given input frequency (f_{IN}), the output frequency (f_{OUT}) of the CDCEx913 are calculated with Equation 1.

$$f_{OUT} = \frac{f_{IN}}{Pdiv} \times \frac{N}{M} \tag{1}$$

where

- M (1 to 511) and N (1 to 4095) are the multiplier/divide values of the PLL
- Pdiv (1 to 127) is the output divider

The target VCO frequency (f_{VCO}) of each PLL is calculated with Equation 2.

$$f_{VCO} = f_{IN} \times \frac{N}{M} \tag{2}$$

The PLL internally operates as fractional divider and needs the following multiplier/divider settings:

- N
- P = 4 – int($\log_2$N/M; if P < 0 then P = 0
- Q = int(N'/M)
- R = N′ – M × Q

where

$N' = N \times 2^P$

$N \geq M$;

$80MHz \leq f_{VCO} \leq 230MHz$

$16 \leq Q \leq 63$

$0 \leq P \leq 4$

$0 \leq R \leq 51$

Example:

for f_{IN} = 27MHz; M = 1; N = 4; Pdiv = 2

→ f_{OUT} = 54MHz
→ f_{VCO} = 108MHz
→ P = 4 – int($\log_2$4) = 4 – 2 = 2
→ N' = 4 × 2^2 = 16
→ Q = int(16) = 16
→ R = 16 – 16 = 0

for f_{IN} = 27MHz; M = 2; N = 11; Pdiv = 2

→ f_{OUT} = 74.25MHz
→ f_{VCO} = 148.50MHz
→ P = 4 – int($\log_2$5.5) = 4 – 2 = 2
→ N' = 11 × 2^2 = 44
→ Q = int(22) = 22
→ R = 44 – 44 = 0

The values for P, Q, R, and N' are automatically calculated when using TI Pro-Clock™ software.

9.2.2.3 Crystal Oscillator Start-Up

When the CDCEx937 is used as a crystal buffer, crystal oscillator start-up dominates the start-up time compared to the internal PLL lock time. Figure 9-4 shows the oscillator start-up sequence for a 27MHz crystal input with an 8pF load. The start-up time for the crystal is in the order of approximately 250µs compared to approximately 10µs of lock time. In general, lock time is an order of magnitude less compared to the crystal start-up time.

Copyright © 2024 Texas Instruments Incorporated

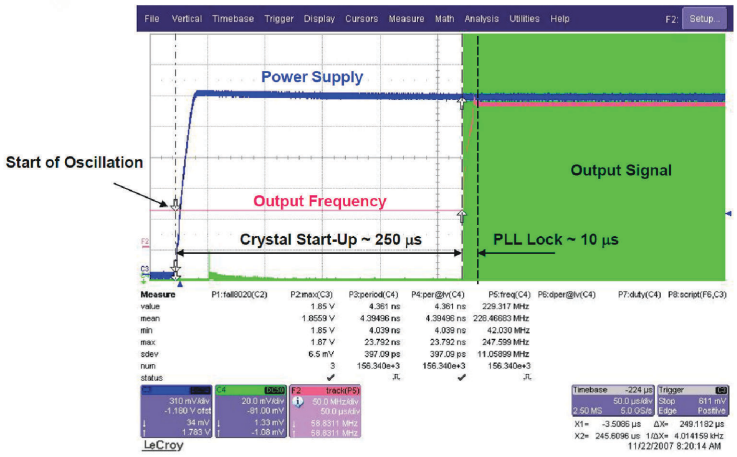

Figure 9-4. Crystal Oscillator Start-Up vs PLL Lock Time

9.2.2.4 Frequency Adjustment With Crystal Oscillator Pulling

The frequency for the CDCEx937 is adjusted for media and other applications with the VCXO control input Vctrl. If a PWM modulated signal is used as a control signal for the VCXO, an external filter is needed.

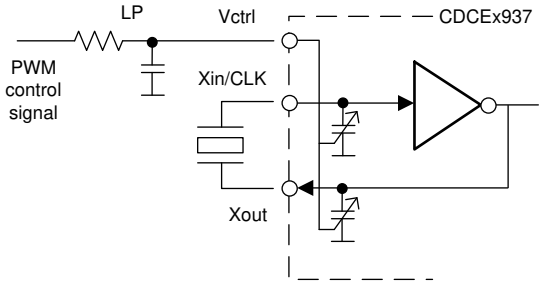

Copyright © 2016, Texas Instruments Incorporated

Figure 9-5. Frequency Adjustment Using PWM Input to the VCXO Control

9.2.2.5 Unused Inputs and Outputs

If VCXO pulling functionality is not required, Vctrl must be left floating. All other unused inputs must be set to GND. Unused outputs must be left floating.

If one output block is not used, TI recommends disabling the output block. However, TI always recommends providing the supply for the second output block even if the output block is disabled.

9.2.2.6 Switching Between XO and VCXO Mode

When the CDCEx937 is in crystal oscillator or in VCXO configuration, the internal capacitors require different internal capacitance. The following steps are recommended to switch to VCXO mode when the configuration for the on-chip capacitor is still set for XO mode. To center the output frequency to 0ppm:

1. While in XO mode, put Vctrl = Vdd / 2
2. Switch from XO mode to VCXO mode
3. Program the internal capacitors to obtain 0ppm at the output

9.2.3 Application Curves

Figure 9-6, Figure 9-7, Figure 9-8, and Figure 9-9 show CDCEx937 measurements with the SSC feature enabled. Device configuration: 27MHz input, 27MHz output.

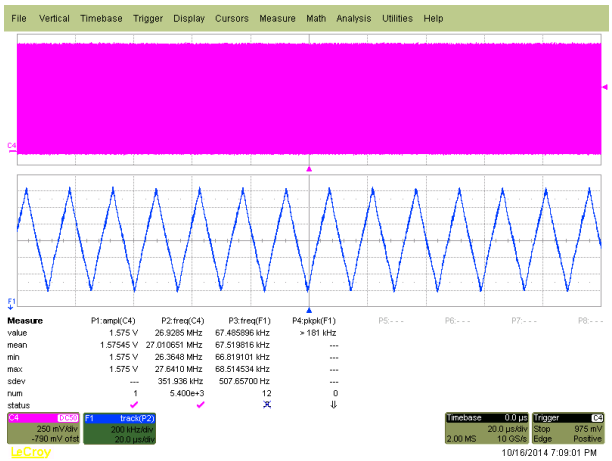

Figure 9-6. fout = 27MHz, VCO frequency < 125MHz, SSC (2% center)

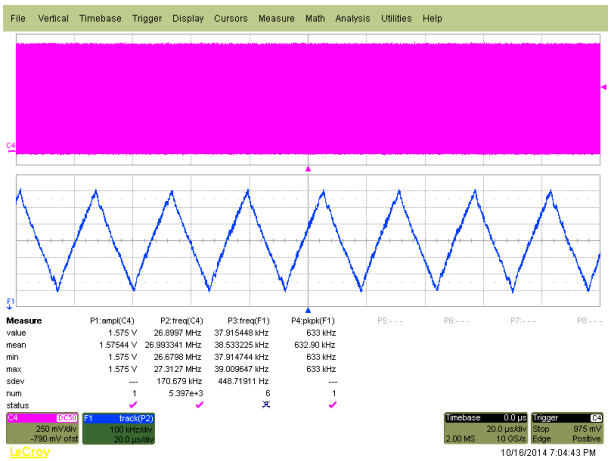

Figure 9-7. fout = 27MHz, VCO frequency > 175MHz, SSC (1%, center)

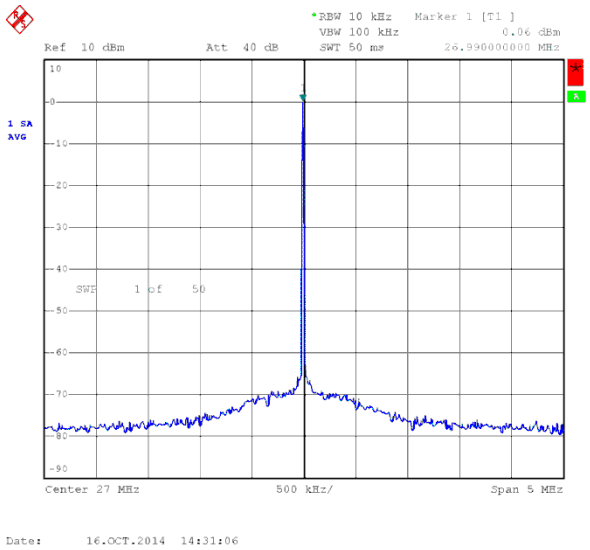

Figure 9-8. Output Spectrum With SSC Off

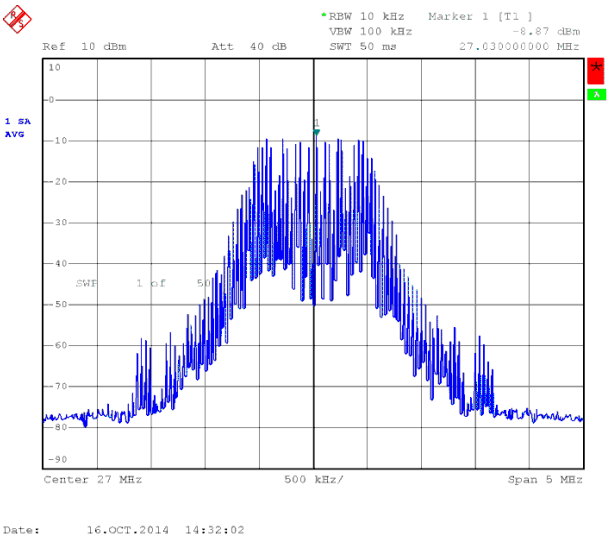

Figure 9-9. Output Spectrum With SSC On, 2% Center

9.3 Power Supply Recommendations

When using an external reference clock, Xin/CLK must be driven before V_{DD} ramps to avoid risk of unstable output. If V_{DDOUT} is applied before V_{DD}, TI recommends keeping V_{DD} pulled to GND until V_{DDOUT} is ramped. In case the V_{DDOUT} is powered while V_{DD} is floating, there is a risk of high current flowing on the V_{DDOUT}.

The device has a power-up control that is connected to the 1.8V supply. This keeps the whole device disabled until the 1.8V supply reaches a sufficient voltage level. Then the device switches on all internal components, including the outputs. If there is a 3.3V Vddout available before the 1.8V, the outputs remain disabled until the 1.8V supply has reached a certain level.

9.4 Layout

9.4.1 Layout Guidelines

When the CDCEx937 is used as a crystal buffer, any parasitics across the crystal affects the pulling range of the VCXO. Therefore, take care in placing the crystal units on the board. Crystals must be placed as close to the device as possible, verifying that the routing lines from the crystal terminals to XIN and XOUT have the same length.

Copyright © 2024 Texas Instruments Incorporated

If possible, cut out both ground plane and power plane under the area where the crystal and the routing to the device are placed. In this area, always avoid routing any other signal line, to avoid creating a source of noise coupling.

Additional discrete capacitors can be required to meet the load capacitance specification of certain crystal. For example, a 10.7pF load capacitor is not fully programmable on the chip, because the internal capacitor can range from 0pF to 20pF with steps of 1pF. The 0.7pF capacitor therefore can be discretely added on top of an internal 10pF.

To minimize the inductive influence of the trace, TI recommends placing this small capacitor as close to the device as possible and symmetrically with respect to XIN and XOUT.

Figure 9-10 shows a conceptual layout detailing recommended placement of power supply bypass capacitors on the basis of CDCEx937. For component side mounting, use 0402 body size capacitors to facilitate signal routing. Keep the connections between the bypass capacitors and the power supply on the device as short as possible. Ground the other side of the capacitor using a low-impedance connection to the ground plane.

9.4.2 Layout Example

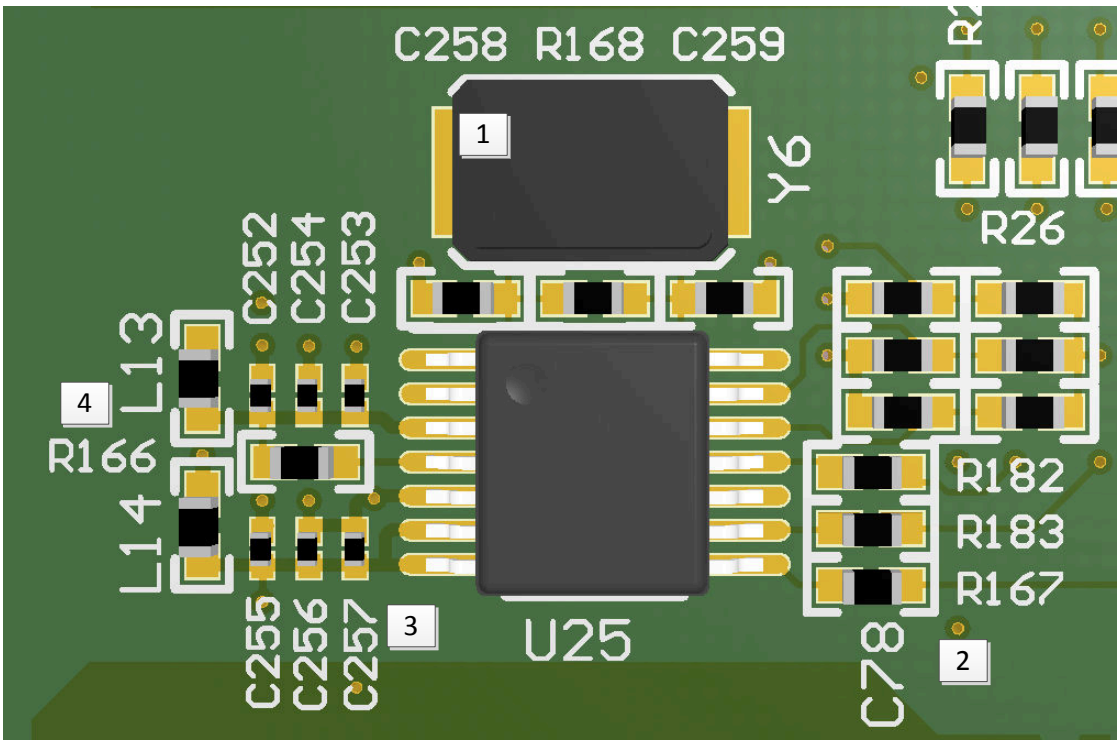

1 Place crystal with associated load caps as close to the chip	2 Place series termination resistors at Clock outputs to improve signal integrity
3 Place bypass caps close to the device pins, ensure wide freq. range	4 Use ferrite beads to isolate the device supply pins from board noise sources

Figure 9-10. Annotated Layout

10 Device and Documentation Support

10.1 Device Support

10.1.1 Third-Party Products Disclaimer

TI'S PUBLICATION OF INFORMATION REGARDING THIRD-PARTY PRODUCTS OR SERVICES DOES NOT CONSTITUTE AN ENDORSEMENT REGARDING THE SUITABILITY OF SUCH PRODUCTS OR SERVICES OR A WARRANTY, REPRESENTATION OR ENDORSEMENT OF SUCH PRODUCTS OR SERVICES, EITHER ALONE OR IN COMBINATION WITH ANY TI PRODUCT OR SERVICE.

10.1.2 Development Support

For development support see the following:

- SMBus
- I^2C Bus

10.2 Documentation Support

10.2.1 Related Documentation

For related documentation see the following:

1. Texas Instruments, *VCXO Application Guideline for CDCE(L)9xx Family* Application Note
2. Texas Instruments, CDCE(L)9xx Performance Evaluation Module EVM User's Guide
3. Texas Instruments, CDCE(L)9xx and CDCEx06 Programming Evaluation Module Programming EVM User's Guide

10.3 Receiving Notification of Documentation Updates

To receive notification of documentation updates, navigate to the device product folder on ti.com. Click on *Notifications* to register and receive a weekly digest of any product information that has changed. For change details, review the revision history included in any revised document.

10.4 Support Resources

TI E2E™ support forums are an engineer's go-to source for fast, verified answers and design help — straight from the experts. Search existing answers or ask your own question to get the quick design help you need.

Linked content is provided "AS IS" by the respective contributors. They do not constitute TI specifications and do not necessarily reflect TI's views; see TI's Terms of Use.

10.5 Trademarks

Bluetooth™ is a trademark of Bluetooth SIG.
Ethernet™ is a trademark of Xerox Corporation.
TI DaVinci™, OMAP™, Pro-Clock™, and TI E2E™ are trademarks of Texas Instruments.
All trademarks are the property of their respective owners.

10.6 Electrostatic Discharge Caution

This integrated circuit can be damaged by ESD. Texas Instruments recommends that all integrated circuits be handled with appropriate precautions. Failure to observe proper handling and installation procedures can cause damage.

ESD damage can range from subtle performance degradation to complete device failure. Precision integrated circuits may be more susceptible to damage because very small parametric changes could cause the device not to meet its published specifications.

10.7 Glossary

TI Glossary	This glossary lists and explains terms, acronyms, and definitions.

Copyright © 2024 Texas Instruments Incorporated

11 Revision History

NOTE: Page numbers for previous revisions may differ from page numbers in the current version.

Changes from Revision H (July 2024) to Revision I (October 2024) **Page**

- Added relevant end equipment links 1
- Replaced instances of "master/slave" to "controller/target" throughout the document 1
- Updated the numbering format for tables, figures, and cross-references throughout the document 1
- Added information on allowable data inputs during the EEPROM write cycle in *Data Protocol* 14
- Renamed *SLAVE_ADR* to *I2C_ADR* 16
- Updated *Power Supply Recommendations* 26
- Included EVM User's Guides 28

Changes from Revision G (October 2016) to Revision H (July 2024) **Page**

- Updated the numbering format for tables, figures, and cross-references throughout the document 1

Changes from Revision F (March 2010) to Revision G (October 2016) **Page**

- Added *ESD Ratings* table, *Feature Description* section, *Device Functional Modes*, *Application and Implementation* section, *Power Supply Recommendations* section, *Layout* section, *Device and Documentation Support* section, and *Mechanical, Packaging, and Orderable Information* section 1
- Changed *Applications* 1
- Changed Thermal Resistance Junction to Ambient, $R_{\theta JA}$, values in *Thermal Information* From: 89 (0 lfm), 75 (150 lfm), 74 (200 lfm), 74 (250 lfm), and 69 (500 lfm) To: 89.04 5
- Deleted *Input Capacitance* figure 16

Changes from Revision E (October 2009) to Revision F (March 2010) **Page**

- Added PLL settings limits: 16 ≤ q ≤ 63, 0 ≤ p ≤ 7, 0 ≤ r ≤ 511, 0 < N < 4096 foot to PLL1, PLL2, and PLL3 Configure Register Table 16
- Changed 100MHz < f_{VCO} > 200MHz; TO 80MHz ≤ f_{VCO} ≤ 230MHz; and changed 0 ≤ p ≤ 7 TO 0 ≤ p ≤ 4 23
- Changed under Example, fifth row, N", 2 places TO N' 23

Changes from Revision D (September 2009) to Revision E (October 2009) **Page**

- Deleted sentence - A different default setting can be programmed on customer request. Contact Texas Instruments sales or marketing representative for more information 16

Changes from Revision C (January 2009) to Revision D (September 2009) **Page**

- Added Note 3: SDA and SCL can go up to 3.6V as stated in the *Recommended Operating Conditions* table 4

Changes from Revision B (December 2007) to Revision C (January 2009) **Page**

- Changed Generic Configuration Register table SLAVE_ADR default value From: 00b To: 01b 16

Copyright © 2024 Texas Instruments Incorporated

Changes from Revision A (September 2007) to Revision B (December 2007)	Page
• Changed Terminal Functions Table - the pin numbers to correspond with pin outs on the package	3
• Added note to PWDN description to *Generic Configuration Register* table	16
• Changed *Generic Configuration Register* table RID default From: 0h To: Xb	16

Changes from Revision * (August 2007) to Revision A (September 2007)	Page
• Changed the data sheet status From: Product Preview To: Production data	1

12 Mechanical, Packaging, and Orderable Information

The following pages include mechanical, packaging, and orderable information. This information is the most current data available for the designated devices. This data is subject to change without notice and revision of this document. For browser-based versions of this data sheet, refer to the left-hand navigation.

Copyright © 2024 Texas Instruments Incorporated

PACKAGING INFORMATION

Orderable part number	Status (1)	Material type (2)	Package | Pins	Package qty | Carrier	RoHS (3)	Lead finish/ Ball material (4)	MSL rating/ Peak reflow (5)	Op temp (°C)	Part marking (6)
CDCE937PW	Active	Production	TSSOP (PW) | 20	70 | TUBE	Yes	NIPDAU	Level-1-260C-UNLIM	-40 to 85	CDCE937
CDCE937PW.B	Active	Production	TSSOP (PW) | 20	70 | TUBE	Yes	NIPDAU	Level-1-260C-UNLIM	-40 to 85	CDCE937
CDCE937PWG4	Active	Production	TSSOP (PW) | 20	70 | TUBE	Yes	NIPDAU	Level-1-260C-UNLIM	-40 to 85	CDCE937
CDCE937PWR	Active	Production	TSSOP (PW) | 20	2000 | LARGE T&R	Yes	NIPDAU	Level-1-260C-UNLIM	-40 to 85	CDCE937
CDCE937PWR.B	Active	Production	TSSOP (PW) | 20	2000 | LARGE T&R	Yes	NIPDAU	Level-1-260C-UNLIM	-40 to 85	CDCE937
CDCE937PWRG4	Active	Production	TSSOP (PW) | 20	2000 | LARGE T&R	Yes	NIPDAU	Level-1-260C-UNLIM	-40 to 85	CDCE937
CDCEL937PW	Active	Production	TSSOP (PW) | 20	70 | TUBE	Yes	NIPDAU	Level-1-260C-UNLIM	-40 to 85	CDCEL937
CDCEL937PW.B	Active	Production	TSSOP (PW) | 20	70 | TUBE	Yes	NIPDAU	Level-1-260C-UNLIM	-40 to 85	CDCEL937
CDCEL937PWG4	Active	Production	TSSOP (PW) | 20	70 | TUBE	Yes	NIPDAU	Level-1-260C-UNLIM	-40 to 85	CDCEL937
CDCEL937PWG4.B	Active	Production	TSSOP (PW) | 20	70 | TUBE	Yes	NIPDAU	Level-1-260C-UNLIM	-40 to 85	CDCEL937
CDCEL937PWR	Active	Production	TSSOP (PW) | 20	2000 | LARGE T&R	Yes	NIPDAU	Level-1-260C-UNLIM	-40 to 85	CDCEL937
CDCEL937PWR.B	Active	Production	TSSOP (PW) | 20	2000 | LARGE T&R	Yes	NIPDAU	Level-1-260C-UNLIM	-40 to 85	CDCEL937

(1) **Status:** For more details on status, see our product life cycle.

(2) **Material type:** When designated, preproduction parts are prototypes/experimental devices, and are not yet approved or released for full production. Testing and final process, including without limitation quality assurance, reliability performance testing, and/or process qualification, may not yet be complete, and this item is subject to further changes or possible discontinuation. If available for ordering, purchases will be subject to an additional waiver at checkout, and are intended for early internal evaluation purposes only. These items are sold without warranties of any kind.

(3) **RoHS values:** Yes, No, RoHS Exempt. See the TI RoHS Statement for additional information and value definition.

(4) **Lead finish/Ball material:** Parts may have multiple material finish options. Finish options are separated by a vertical ruled line. Lead finish/Ball material values may wrap to two lines if the finish value exceeds the maximum column width.

(5) **MSL rating/Peak reflow:** The moisture sensitivity level ratings and peak solder (reflow) temperatures. In the event that a part has multiple moisture sensitivity ratings, only the lowest level per JEDEC standards is shown. Refer to the shipping label for the actual reflow temperature that will be used to mount the part to the printed circuit board.

(6) **Part marking:** There may be an additional marking, which relates to the logo, the lot trace code information, or the environmental category of the part.

Multiple part markings will be inside parentheses. Only one part marking contained in parentheses and separated by a "~" will appear on a part. If a line is indented then it is a continuation of the previous line and the two combined represent the entire part marking for that device.

Important Information and Disclaimer: The information provided on this page represents TI's knowledge and belief as of the date that it is provided. TI bases its knowledge and belief on information provided by third parties, and makes no representation or warranty as to the accuracy of such information. Efforts are underway to better integrate information from third parties. TI has taken and continues to take reasonable steps to provide representative and accurate information but may not have conducted destructive testing or chemical analysis on incoming materials and chemicals. TI and TI suppliers consider certain information to be proprietary, and thus CAS numbers and other limited information may not be available for release.

In no event shall TI's liability arising out of such information exceed the total purchase price of the TI part(s) at issue in this document sold by TI to Customer on an annual basis.

OTHER QUALIFIED VERSIONS OF CDCE937, CDCEL937 :

- Automotive : CDCE937-Q1, CDCEL937-Q1

NOTE: Qualified Version Definitions:

- Automotive - Q100 devices qualified for high-reliability automotive applications targeting zero defects

TAPE AND REEL INFORMATION

REEL DIMENSIONS

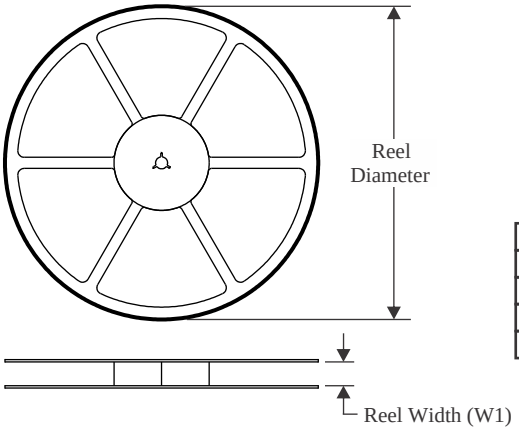

TAPE DIMENSIONS

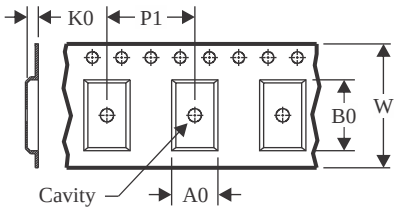

A0	Dimension designed to accommodate the component width
B0	Dimension designed to accommodate the component length
K0	Dimension designed to accommodate the component thickness
W	Overall width of the carrier tape
P1	Pitch between successive cavity centers

QUADRANT ASSIGNMENTS FOR PIN 1 ORIENTATION IN TAPE

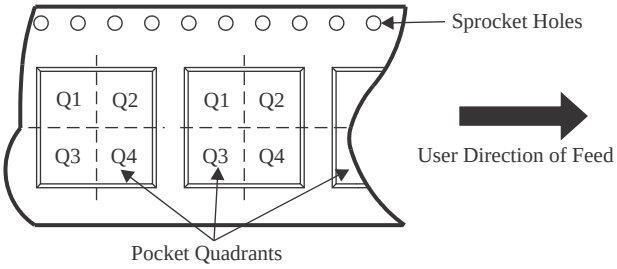

*All dimensions are nominal

Device	Package Type	Package Drawing	Pins	SPQ	Reel Diameter (mm)	Reel Width W1 (mm)	A0 (mm)	B0 (mm)	K0 (mm)	P1 (mm)	W (mm)	Pin1 Quadrant
CDCE937PWR	TSSOP	PW	20	2000	330.0	16.4	6.95	7.1	1.6	8.0	16.0	Q1
CDCEL937PWR	TSSOP	PW	20	2000	330.0	16.4	6.95	7.1	1.6	8.0	16.0	Q1

TAPE AND REEL BOX DIMENSIONS

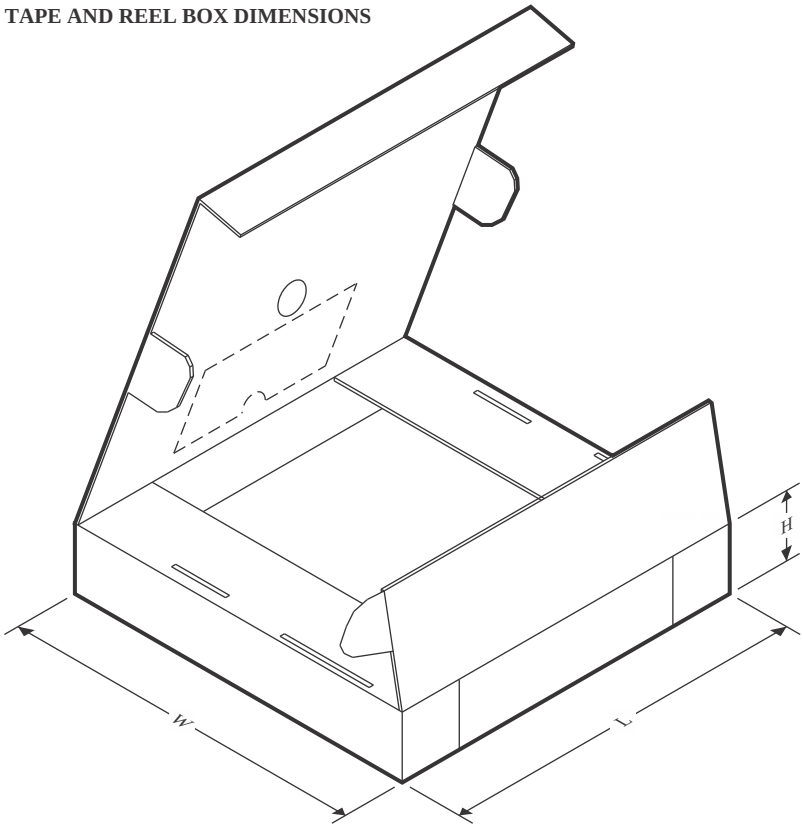

*All dimensions are nominal

Device	Package Type	Package Drawing	Pins	SPQ	Length (mm)	Width (mm)	Height (mm)
CDCE937PWR	TSSOP	PW	20	2000	356.0	356.0	35.0
CDCEL937PWR	TSSOP	PW	20	2000	367.0	367.0	38.0

TUBE

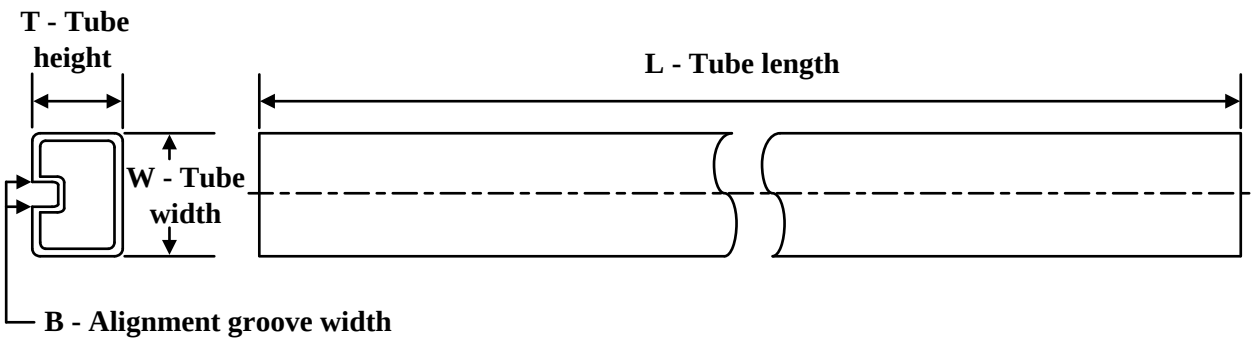

*All dimensions are nominal

Device	Package Name	Package Type	Pins	SPQ	L (mm)	W (mm)	T (µm)	B (mm)
CDCE937PW	PW	TSSOP	20	70	530	10.2	3600	3.5
CDCE937PW.B	PW	TSSOP	20	70	530	10.2	3600	3.5
CDCE937PWG4	PW	TSSOP	20	70	530	10.2	3600	3.5
CDCEL937PW	PW	TSSOP	20	70	530	10.2	3600	3.5
CDCEL937PW.B	PW	TSSOP	20	70	530	10.2	3600	3.5
CDCEL937PWG4	PW	TSSOP	20	70	530	10.2	3600	3.5
CDCEL937PWG4.B	PW	TSSOP	20	70	530	10.2	3600	3.5

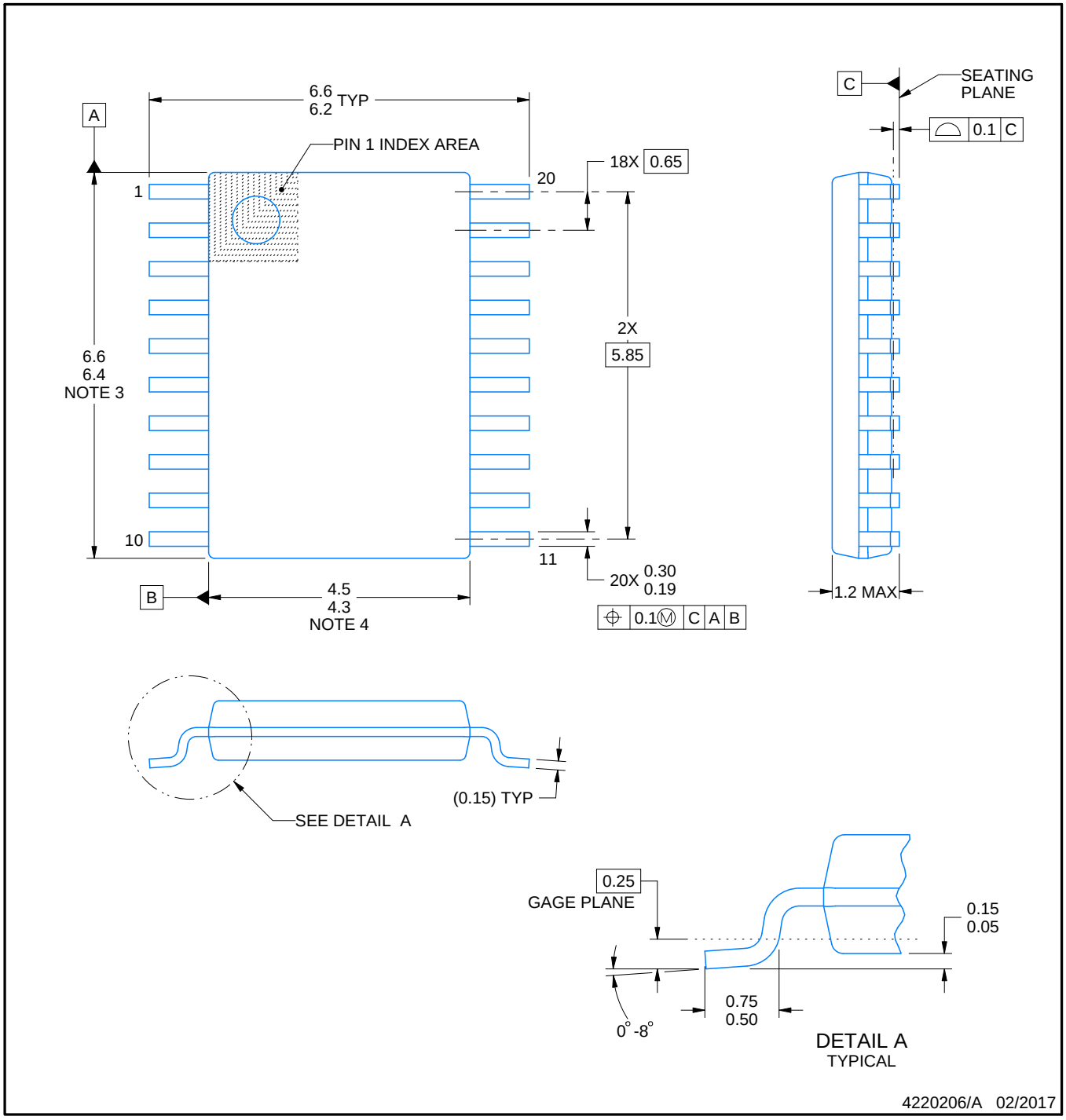

NOTES:

1. All linear dimensions are in millimeters. Any dimensions in parenthesis are for reference only. Dimensioning and tolerancing per ASME Y14.5M.
2. This drawing is subject to change without notice.
3. This dimension does not include mold flash, protrusions, or gate burrs. Mold flash, protrusions, or gate burrs shall not exceed 0.15 mm per side.
4. This dimension does not include interlead flash. Interlead flash shall not exceed 0.25 mm per side.
5. Reference JEDEC registration MO-153.

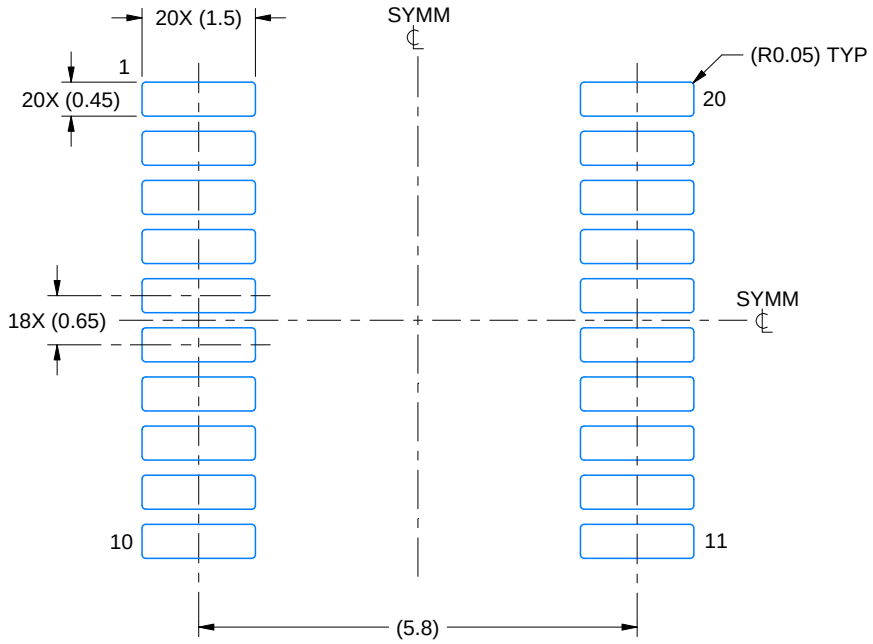

LAND PATTERN EXAMPLE
EXPOSED METAL SHOWN
SCALE: 10X

NON-SOLDER MASK DEFINED (PREFERRED)

SOLDER MASK DEFINED

SOLDER MASK DETAILS

4220206/A 02/2017

NOTES: (continued)

6. Publication IPC-7351 may have alternate designs.
7. Solder mask tolerances between and around signal pads can vary based on board fabrication site.

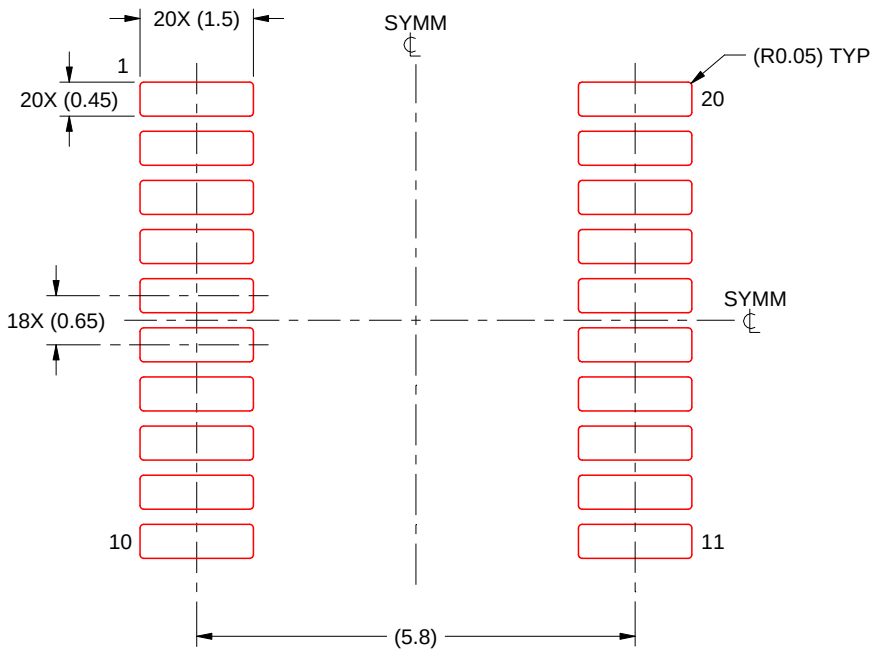

SOLDER PASTE EXAMPLE
BASED ON 0.125 mm THICK STENCIL
SCALE: 10X

4220206/A 02/2017

NOTES: (continued)

8. Laser cutting apertures with trapezoidal walls and rounded corners may offer better paste release. IPC-7525 may have alternate design recommendations.
9. Board assembly site may have different recommendations for stencil design.

IMPORTANT NOTICE AND DISCLAIMER

TI PROVIDES TECHNICAL AND RELIABILITY DATA (INCLUDING DATA SHEETS), DESIGN RESOURCES (INCLUDING REFERENCE DESIGNS), APPLICATION OR OTHER DESIGN ADVICE, WEB TOOLS, SAFETY INFORMATION, AND OTHER RESOURCES “AS IS” AND WITH ALL FAULTS, AND DISCLAIMS ALL WARRANTIES, EXPRESS AND IMPLIED, INCLUDING WITHOUT LIMITATION ANY IMPLIED WARRANTIES OF MERCHANTABILITY, FITNESS FOR A PARTICULAR PURPOSE OR NON-INFRINGEMENT OF THIRD PARTY INTELLECTUAL PROPERTY RIGHTS.

These resources are intended for skilled developers designing with TI products. You are solely responsible for (1) selecting the appropriate TI products for your application, (2) designing, validating and testing your application, and (3) ensuring your application meets applicable standards, and any other safety, security, regulatory or other requirements.

These resources are subject to change without notice. TI grants you permission to use these resources only for development of an application that uses the TI products described in the resource. Other reproduction and display of these resources is prohibited. No license is granted to any other TI intellectual property right or to any third party intellectual property right. TI disclaims responsibility for, and you will fully indemnify TI and its representatives against, any claims, damages, costs, losses, and liabilities arising out of your use of these resources.

TI’s products are provided subject to TI’s Terms of Sale or other applicable terms available either on ti.com or provided in conjunction with such TI products. TI’s provision of these resources does not expand or otherwise alter TI’s applicable warranties or warranty disclaimers for TI products.

TI objects to and rejects any additional or different terms you may have proposed.

Mailing Address: Texas Instruments, Post Office Box 655303, Dallas, Texas 75265
Copyright © 2025, Texas Instruments Incorporated