FEATURES

- **Member of the Texas Instruments Widebus™ Family**
- **Bus Hold on Data Inputs Eliminates the Need for External Pullup/Pulldown Resistors**
- **Latch-Up Performance Exceeds 250 mA Per JESD 17**
- **ESD Protection Exceeds JESD 22**
  - 2000-V Human-Body Model (A114-A)
  - 200-V Machine Model (A115-A)

DGG OR DL PACKAGE
(TOP VIEW)

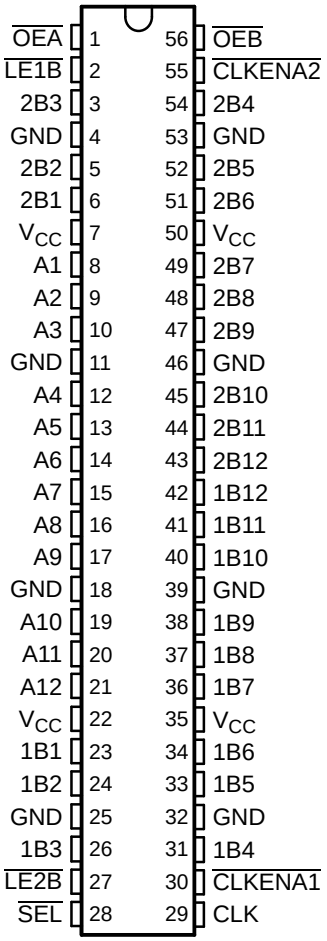

DESCRIPTION/ORDERING INFORMATION

This 12-bit to 24-bit bus exchanger is designed for 1.65-V to 3.6-V V_{CC} operation.

The SN74ALVCH16271 is intended for applications in which two separate data paths must be multiplexed onto, or demultiplexed from, a single data path. This device is particularly suitable as an interface between conventional DRAMs and high-speed microprocessors.

A data is stored in the internal A-to-B registers on the low-to-high transition of the clock (CLK) input, provided that the clock-enable ($\overline{CLKENA}$) inputs are low. Proper control of these inputs allows two sequential 12-bit words to be presented as a 24-bit word on the B port.

Transparent latches in the B-to-A path allow asynchronous operation to maximize memory access throughput. These latches transfer data when the latch-enable ($\overline{LE}$) inputs are low. The select ($\overline{SEL}$) line selects 1B or 2B data for the A outputs. Data flow is controlled by the active-low output enables ($\overline{OEA}$, $\overline{OEB}$).

To ensure the high-impedance state during power up or power down, the output enables should be tied to V_{CC} through a pullup resistor; the minimum value of the resistor is determined by the current-sinking capability of the driver.

Active bus-hold circuitry holds unused or undriven inputs at a valid logic state. Use of pullup or pulldown resistors with the bus-hold circuitry is not recommended.

ORDERING INFORMATION

T_A	PACKAGE(1)		ORDERABLE PART NUMBER	TOP-SIDE MARKING
-40°C to 85°C	SSOP - DL	Tube	SN74ALVCH16271DL	ALVCH16271
		Tape and reel	SN74ALVCH16271DLR	
	TSSOP - DGG	Tape and reel	SN74ALVCH16271DGGR	ALVCH16271

(1) Package drawings, standard packing quantities, thermal data, symbolization, and PCB design guidelines are available at www.ti.com/sc/package.

Please be aware that an important notice concerning availability, standard warranty, and use in critical applications of Texas Instruments semiconductor products and disclaimers thereto appears at the end of this data sheet.

Widebus is a trademark of Texas Instruments.

PRODUCTION DATA information is current as of publication date. Products conform to specifications per the terms of the Texas Instruments standard warranty. Production processing does not necessarily include testing of all parameters.

Copyright © 1995–2004, Texas Instruments Incorporated

FUNCTION TABLES

OUTPUT ENABLE

INPUTS		OUTPUTS	
$\overline{OEA}$	$\overline{OEB}$	A	1B, 2B
H	H	Z	Z
H	L	Z	Active
L	H	Active	Z
L	L	Active	Active

A-TO-B STORAGE ($\overline{OEB}$ = L)

INPUTS				OUTPUTS	
$\overline{CLKENA1}$	$\overline{CLKENA2}$	CLK	A	1B	2B
H	H	X	X	$1B_0$ (1)	$2B_0$ (1)
L	X	↑	L	L	X
L	X	↑	H	H	X
X	L	↑	L	X	L
X	L	↑	H	A_0	H

(1) Output level before the indicated steady-state input conditions were established

B-TO-A STORAGE ($\overline{OEA}$ = L)

INPUTS				OUTPUT A
$\overline{LE}$	$\overline{SEL}$	1B	2B	
H	X	X	X	A_0 (1)
H	X	X	X	A_0 (1)
L	H	L	X	L
L	H	H	X	H
L	L	X	L	L
L	L	X	H	H

(1) Output level before the indicated steady-state input conditions were established

LOGIC DIAGRAM (POSITIVE LOGIC)

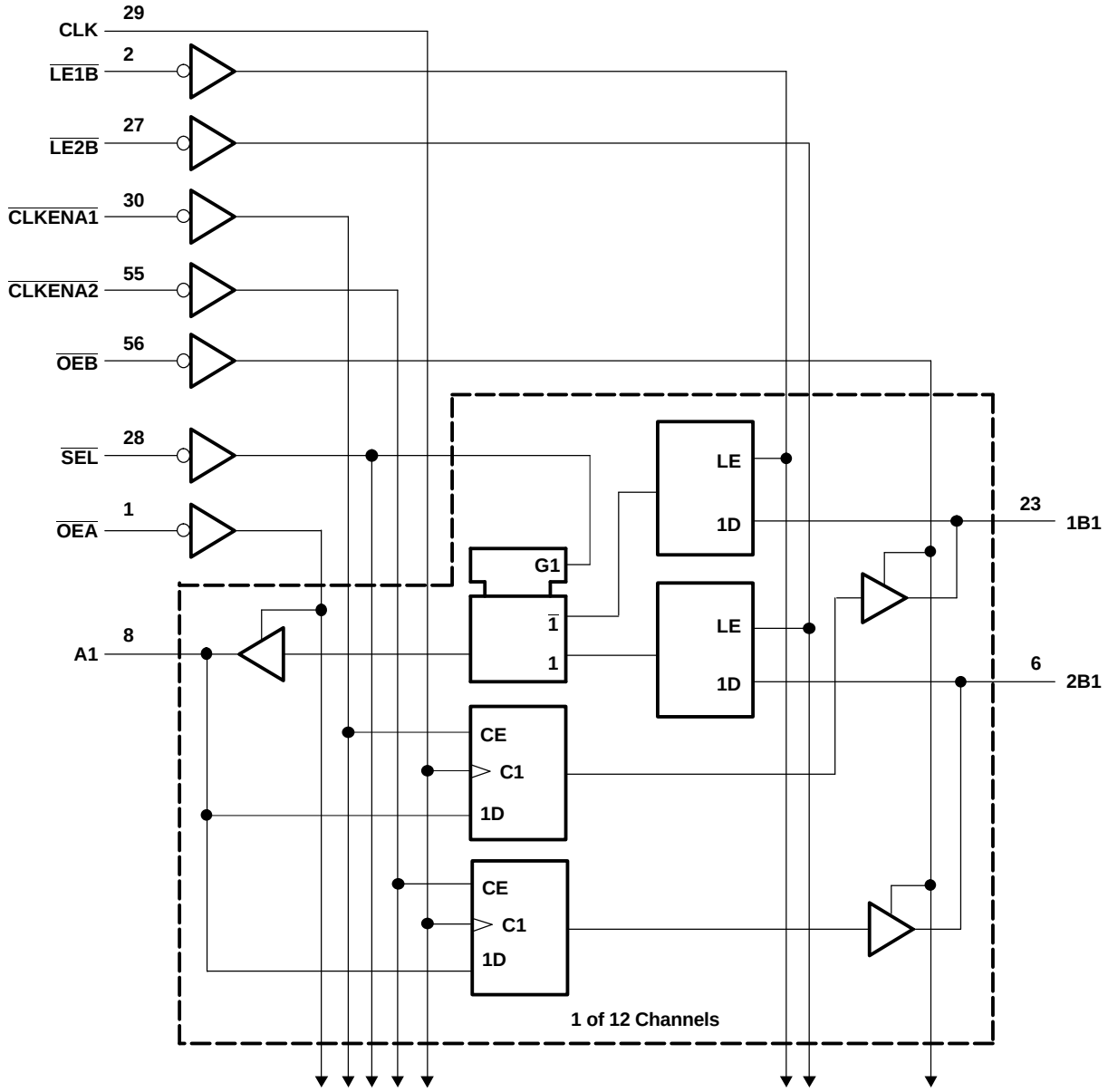

ABSOLUTE MAXIMUM RATINGS[1]

over operating free-air temperature range (unless otherwise noted)

			MIN	MAX	UNIT
V_{CC}	Supply voltage range		-0.5	4.6	V
V_I	Input voltage range	Except I/O ports[2]	-0.5	4.6	V
		I/O ports[2][3]	-0.5	V_{CC} + 0.5	
V_O	Output voltage range[2][3]		-0.5	V_{CC} + 0.5	V
I_{IK}	Input clamp current	$V_I < 0$		-50	mA
I_{OK}	Output clamp current	$V_O < 0$		-50	mA
I_O	Continuous output current			±50	mA
	Continuous current through each V_{CC} or GND			±100	mA
θ_{JA}	Package thermal impedance[4]	DGG package		64	°C/W
		DL package		56	
T_{stg}	Storage temperature range		-65	150	°C

(1) Stresses beyond those listed under "absolute maximum ratings" may cause permanent damage to the device. These are stress ratings only, and functional operation of the device at these or any other conditions beyond those indicated under "recommended operating conditions" is not implied. Exposure to absolute-maximum-rated conditions for extended periods may affect device reliability.
(2) The input negative-voltage and output voltage ratings may be exceeded if the input and output current ratings are observed.
(3) This value is limited to 4.6 V maximum.
(4) The package thermal impedance is calculated in accordance with JESD 51-7.

RECOMMENDED OPERATING CONDITIONS[1]

			MIN	MAX	UNIT
V_{CC}	Supply voltage		1.65	3.6	V
V_{IH}	High-level input voltage	V_{CC} = 1.65 V to 1.95 V	0.65 × V_{CC}		V
		V_{CC} = 2.3 V to 2.7 V	1.7		
		V_{CC} = 2.7 V to 3.6 V	2		
V_{IL}	Low-level input voltage	V_{CC} = 1.65 V to 1.95 V		0.35 × V_{CC}	V
		V_{CC} = 2.3 V to 2.7 V		0.7	
		V_{CC} = 2.7 V to 3.6 V		0.8	
V_I	Input voltage		0	V_{CC}	V
V_O	Output voltage		0	V_{CC}	V
I_{OH}	High-level output current	V_{CC} = 1.65 V		-4	mA
		V_{CC} = 2.3 V		-12	
		V_{CC} = 2.7 V		-12	
		V_{CC} = 3 V		-24	
I_{OL}	Low-level output current	V_{CC} = 1.65 V		4	mA
		V_{CC} = 2.3 V		12	
		V_{CC} = 2.7 V		12	
		V_{CC} = 3 V		24	
$\Delta t/\Delta v$	Input transition rise or fall rate			10	ns/V
T_A	Operating free-air temperature		-40	85	°C

(1) All unused control inputs of the device must be held at V_{CC} or GND to ensure proper device operation. Refer to the TI application report, *Implications of Slow or Floating CMOS Inputs*, literature number SCBA004.

ELECTRICAL CHARACTERISTICS

over recommended operating free-air temperature range (unless otherwise noted)

PARAMETER	TEST CONDITIONS	V_{CC}	MIN	TYP(1)	MAX	UNIT
V_{OH}	I_{OH} = -100 µA	1.65 V to 3.6 V	V_{CC} - 0.2			V
	I_{OH} = -4 mA	1.65 V	1.2			
	I_{OH} = -6 mA	2.3 V	2			
	I_{OH} = -12 mA	2.3 V	1.7			
		2.7 V	2.2			
		3 V	2.4			
	I_{OH} = -24 mA	3 V	2			
V_{OL}	I_{OL} = 100 µA	1.65 V to 3.6 V			0.2	V
	I_{OL} = 4 mA	1.65 V			0.45	
	I_{OL} = 6 mA	2.3 V			0.4	
	I_{OL} = 12 mA	2.3 V			0.7	
		2.7 V			0.4	
	I_{OL} = 24 mA	3 V			0.55	
I_I	V_I = V_{CC} or GND	3.6 V			±5	µA
$I_{I(hold)}$	V_I = 0.58 V	1.65 V	25			µA
	V_I = 1.07 V	1.65 V	-25			
	V_I = 0.7 V	2.3 V	45			
	V_I = 1.7 V	2.3 V	-45			
	V_I = 0.8 V	3 V	75			
	V_I = 2 V	3 V	-75			
	V_I = 0 to 3.6 V(2)	3.6 V			±500	
I_{OZ}(3)	V_O = V_{CC} or GND	3.6 V			±10	µA
I_{CC}	V_I = V_{CC} or GND, I_O = 0	3.6 V			40	µA
ΔI_{CC}	One input at V_{CC} - 0.6 V, Other inputs at V_{CC} or GND	3 V to 3.6 V			750	µA
C_i Control inputs	V_I = V_{CC} or GND	3.3 V		3.5		pF
C_{io} A or B ports	V_O = V_{CC} or GND	3.3 V		9		pF

(1) All typical values are at V_{CC} = 3.3 V, T_A = 25°C.
(2) This is the bus-hold maximum dynamic current. It is the minimum overdrive current required to switch the input from one state to another.
(3) For I/O ports, the parameter I_{OZ} includes the input leakage current.

TIMING REQUIREMENTS

over recommended operating free-air temperature range (unless otherwise noted) (see Figure 1 through Figure 3)

			V_{CC} = 2.5 V ± 0.2 V		V_{CC} = 2.7 V		V_{CC} = 3.3 V ± 0.3 V		UNIT
			MIN	MAX	MIN	MAX	MIN	MAX	
f_{clock}	Clock frequency			130		130		130	MHz
t_w	Pulse duration, CLK high or low		3.3		3.3		3.3		ns
t_{su}	Setup time	A before CLK↑	2.6		2.1		1.7		ns
		B before $\overline{LE}$	1.7		1.5		1.3		
		$\overline{CLKEN}$ before CLK↑	1.6		1.3		1		
t_h	Hold time	A after CLK↑	0.6		0.6		0.7		ns
		B after $\overline{LE}$	0.9		0.9		1.1		
		$\overline{CLKEN}$ after CLK↑	1		0.9		0.9		

SWITCHING CHARACTERISTICS

over recommended operating free-air temperature range (unless otherwise noted) (see Figure 1 through Figure 3)

PARAMETER	FROM (INPUT)	TO (OUTPUT)	V_{CC} = 1.8 V	V_{CC} = 2.5 V ± 0.2 V		V_{CC} = 2.7 V		V_{CC} = 3.3 V ± 0.3 V		UNIT
			TYP	MIN	MAX	MIN	MAX	MIN	MAX	
f_{max}				130		130		130		MHz
t_{pd}	CLK	B	8	1	6.2		5	1	4.3	ns
	B	A	7	1	5.3		4.7	1.4	4	
	$\overline{LE}$		7	1	6		5.9	1.4	4.8	
	$\overline{SEL}$		7	1.1	6.4		6.2	1.3	5.2	
t_{en}	$\overline{OEB}$ or $\overline{OEA}$	B or A	8	1	6		6.1	1	5.1	ns
t_{dis}	$\overline{OEB}$ or $\overline{OEA}$	B or A	7	1.4	5.4		4.6	1.7	4.2	ns

OPERATING CHARACTERISTICS

T_A = 25°C

PARAMETER				TEST CONDITIONS	V_{CC} = 2.5 V	V_{CC} = 3.3 V	UNIT
					TYP	TYP	
C_{pd}	Power dissipation capacitance	A to B	Outputs enabled	C_L = 0, f = 10 MHz	92	105	pF
			Outputs disabled		61	76	
		B to A	Outputs enabled		39	43	
			Outputs disabled		11	13	

PARAMETER MEASUREMENT INFORMATION
V_{CC} = 1.8 V

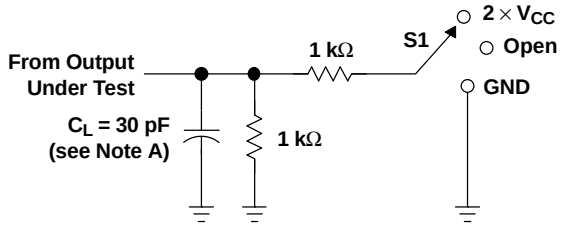

LOAD CIRCUIT

TEST	S1
t_{pd}	Open
t_{PLZ}/t_{PZL}	2 × V_{CC}
t_{PHZ}/t_{PZH}	GND

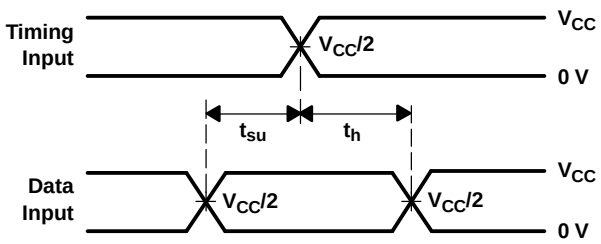

VOLTAGE WAVEFORMS
SETUP AND HOLD TIMES

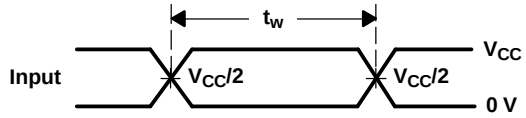

VOLTAGE WAVEFORMS
PULSE DURATION

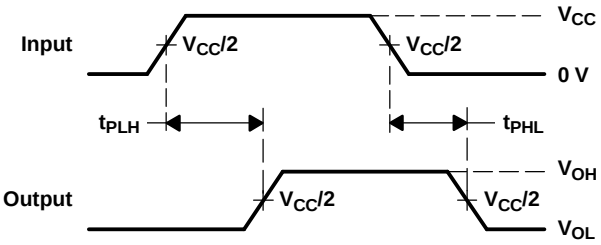

VOLTAGE WAVEFORMS
PROPAGATION DELAY TIMES

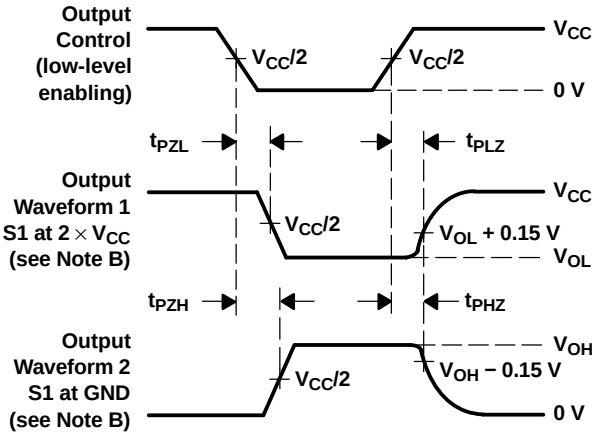

VOLTAGE WAVEFORMS
ENABLE AND DISABLE TIMES

NOTES: A. C_L includes probe and jig capacitance.
B. Waveform 1 is for an output with internal conditions such that the output is low, except when disabled by the output control. Waveform 2 is for an output with internal conditions such that the output is high, except when disabled by the output control.
C. All input pulses are supplied by generators having the following characteristics: PRR ≤ 10 MHz, Z_O = 50 Ω, t_r ≤ 2 ns, t_f ≤ 2 ns.
D. The outputs are measured one at a time, with one transition per measurement.
E. t_{PLZ} and t_{PHZ} are the same as t_{dis}.
F. t_{PZL} and t_{PZH} are the same as t_{en}.
G. t_{PLH} and t_{PHL} are the same as t_{pd}.

Figure 1. Load Circuit and Voltage Waveforms

PARAMETER MEASUREMENT INFORMATION
V_{CC} = 2.5 V ± 0.2 V

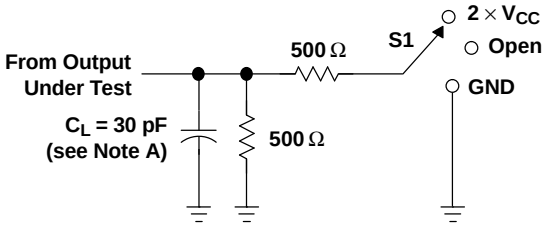

LOAD CIRCUIT

TEST	S1
t_{pd}	Open
t_{PLZ}/t_{PZL}	2 × V_{CC}
t_{PHZ}/t_{PZH}	GND

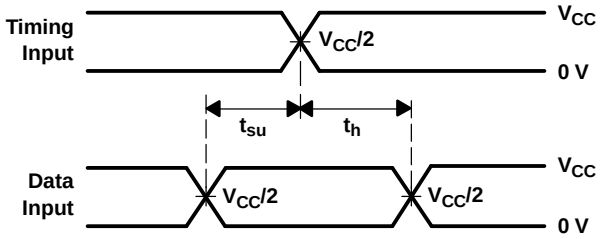

VOLTAGE WAVEFORMS
SETUP AND HOLD TIMES

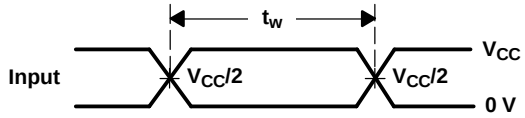

VOLTAGE WAVEFORMS
PULSE DURATION

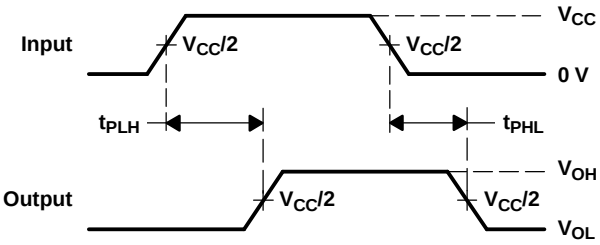

VOLTAGE WAVEFORMS
PROPAGATION DELAY TIMES

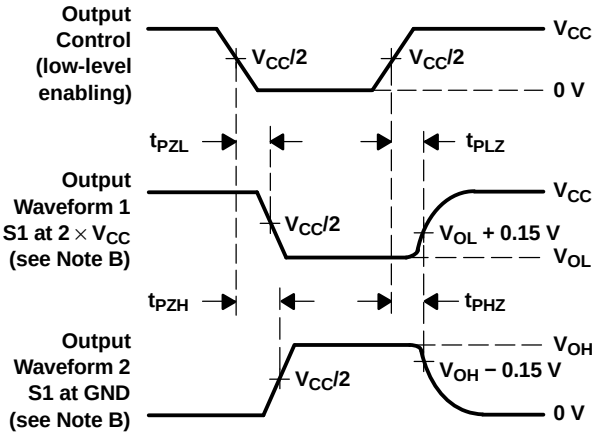

VOLTAGE WAVEFORMS
ENABLE AND DISABLE TIMES

NOTES: A. C_L includes probe and jig capacitance.
B. Waveform 1 is for an output with internal conditions such that the output is low, except when disabled by the output control. Waveform 2 is for an output with internal conditions such that the output is high, except when disabled by the output control.
C. All input pulses are supplied by generators having the following characteristics: PRR ≤ 10 MHz, Z_O = 50 Ω, t_r ≤ 2 ns, t_f ≤ 2 ns.
D. The outputs are measured one at a time, with one transition per measurement.
E. t_{PLZ} and t_{PHZ} are the same as t_{dis}.
F. t_{PZL} and t_{PZH} are the same as t_{en}.
G. t_{PLH} and t_{PHL} are the same as t_{pd}.

Figure 2. Load Circuit and Voltage Waveforms

PARAMETER MEASUREMENT INFORMATION
V_{CC} = 2.7 V AND 3.3 V ± 0.3 V

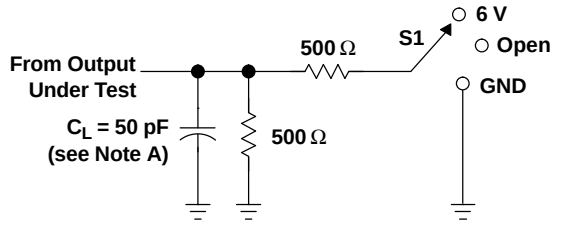

LOAD CIRCUIT

TEST	S1
t_{pd}	Open
t_{PLZ}/t_{PZL}	6 V
t_{PHZ}/t_{PZH}	GND

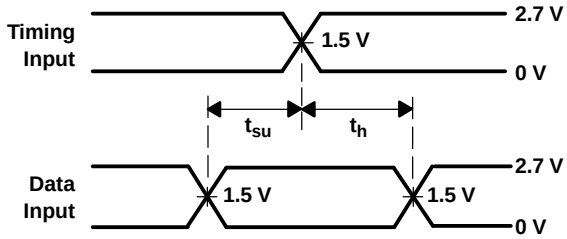

VOLTAGE WAVEFORMS
SETUP AND HOLD TIMES

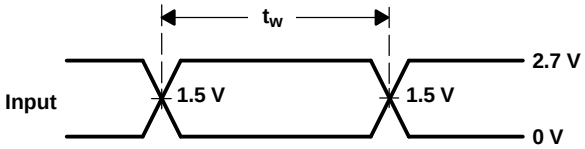

VOLTAGE WAVEFORMS
PULSE DURATION

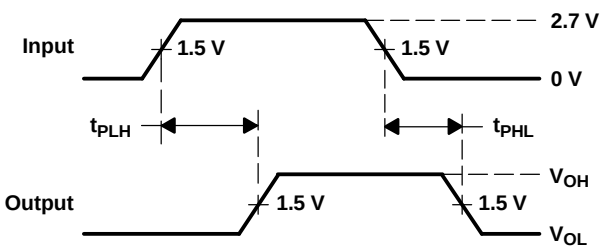

VOLTAGE WAVEFORMS
PROPAGATION DELAY TIMES

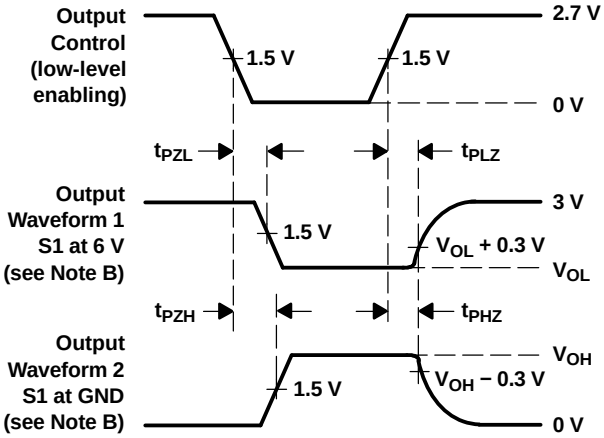

VOLTAGE WAVEFORMS
ENABLE AND DISABLE TIMES

NOTES:
A. C_L includes probe and jig capacitance.
B. Waveform 1 is for an output with internal conditions such that the output is low, except when disabled by the output control. Waveform 2 is for an output with internal conditions such that the output is high, except when disabled by the output control.
C. All input pulses are supplied by generators having the following characteristics: PRR ≤ 10 MHz, Z_O = 50 Ω, t_r ≤ 2.5 ns, t_f ≤ 2.5 ns.
D. The outputs are measured one at a time, with one transition per measurement.
E. t_{PLZ} and t_{PHZ} are the same as t_{dis}.
F. t_{PZL} and t_{PZH} are the same as t_{en}.
G. t_{PLH} and t_{PHL} are the same as t_{pd}.

Figure 3. Load Circuit and Voltage Waveforms

PACKAGING INFORMATION

Orderable part number	Status (1)	Material type (2)	Package | Pins	Package qty | Carrier	RoHS (3)	Lead finish/ Ball material (4)	MSL rating/ Peak reflow (5)	Op temp (°C)	Part marking (6)
SN74ALVCH16271DGGR	Active	Production	TSSOP (DGG) | 56	2000 | LARGE T&R	Yes	NIPDAU	Level-1-260C-UNLIM	-40 to 85	ALVCH16271
SN74ALVCH16271DGGR.B	Active	Production	TSSOP (DGG) | 56	2000 | LARGE T&R	Yes	NIPDAU	Level-1-260C-UNLIM	-40 to 85	ALVCH16271

(1) **Status:** For more details on status, see our product life cycle.

(2) **Material type:** When designated, preproduction parts are prototypes/experimental devices, and are not yet approved or released for full production. Testing and final process, including without limitation quality assurance, reliability performance testing, and/or process qualification, may not yet be complete, and this item is subject to further changes or possible discontinuation. If available for ordering, purchases will be subject to an additional waiver at checkout, and are intended for early internal evaluation purposes only. These items are sold without warranties of any kind.

(3) **RoHS values:** Yes, No, RoHS Exempt. See the TI RoHS Statement for additional information and value definition.

(4) **Lead finish/Ball material:** Parts may have multiple material finish options. Finish options are separated by a vertical ruled line. Lead finish/Ball material values may wrap to two lines if the finish value exceeds the maximum column width.

(5) **MSL rating/Peak reflow:** The moisture sensitivity level ratings and peak solder (reflow) temperatures. In the event that a part has multiple moisture sensitivity ratings, only the lowest level per JEDEC standards is shown. Refer to the shipping label for the actual reflow temperature that will be used to mount the part to the printed circuit board.

(6) **Part marking:** There may be an additional marking, which relates to the logo, the lot trace code information, or the environmental category of the part.

Multiple part markings will be inside parentheses. Only one part marking contained in parentheses and separated by a "~" will appear on a part. If a line is indented then it is a continuation of the previous line and the two combined represent the entire part marking for that device.

Important Information and Disclaimer: The information provided on this page represents TI's knowledge and belief as of the date that it is provided. TI bases its knowledge and belief on information provided by third parties, and makes no representation or warranty as to the accuracy of such information. Efforts are underway to better integrate information from third parties. TI has taken and continues to take reasonable steps to provide representative and accurate information but may not have conducted destructive testing or chemical analysis on incoming materials and chemicals. TI and TI suppliers consider certain information to be proprietary, and thus CAS numbers and other limited information may not be available for release.

In no event shall TI's liability arising out of such information exceed the total purchase price of the TI part(s) at issue in this document sold by TI to Customer on an annual basis.

TAPE AND REEL INFORMATION

REEL DIMENSIONS

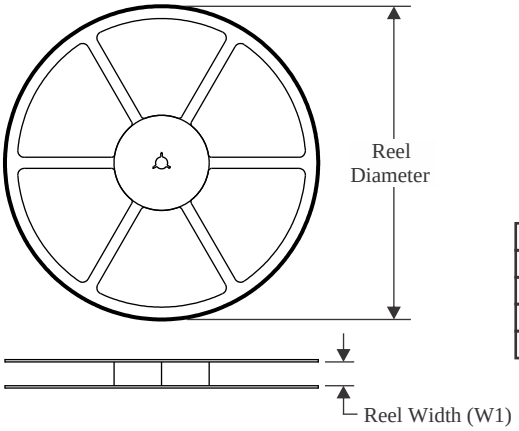

TAPE DIMENSIONS

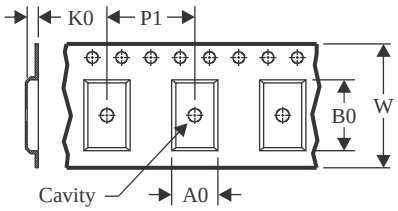

A0	Dimension designed to accommodate the component width
B0	Dimension designed to accommodate the component length
K0	Dimension designed to accommodate the component thickness
W	Overall width of the carrier tape
P1	Pitch between successive cavity centers

QUADRANT ASSIGNMENTS FOR PIN 1 ORIENTATION IN TAPE

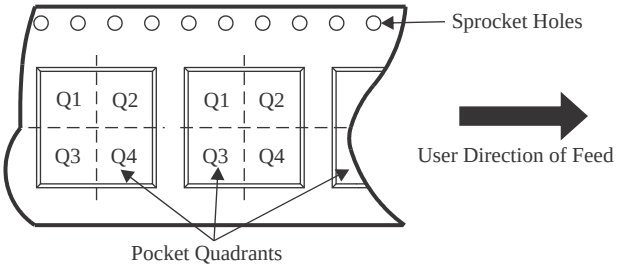

*All dimensions are nominal

Device	Package Type	Package Drawing	Pins	SPQ	Reel Diameter (mm)	Reel Width W1 (mm)	A0 (mm)	B0 (mm)	K0 (mm)	P1 (mm)	W (mm)	Pin1 Quadrant
SN74ALVCH16271DGGR	TSSOP	DGG	56	2000	330.0	24.4	8.9	15.6	1.8	12.0	24.0	Q1

TAPE AND REEL BOX DIMENSIONS

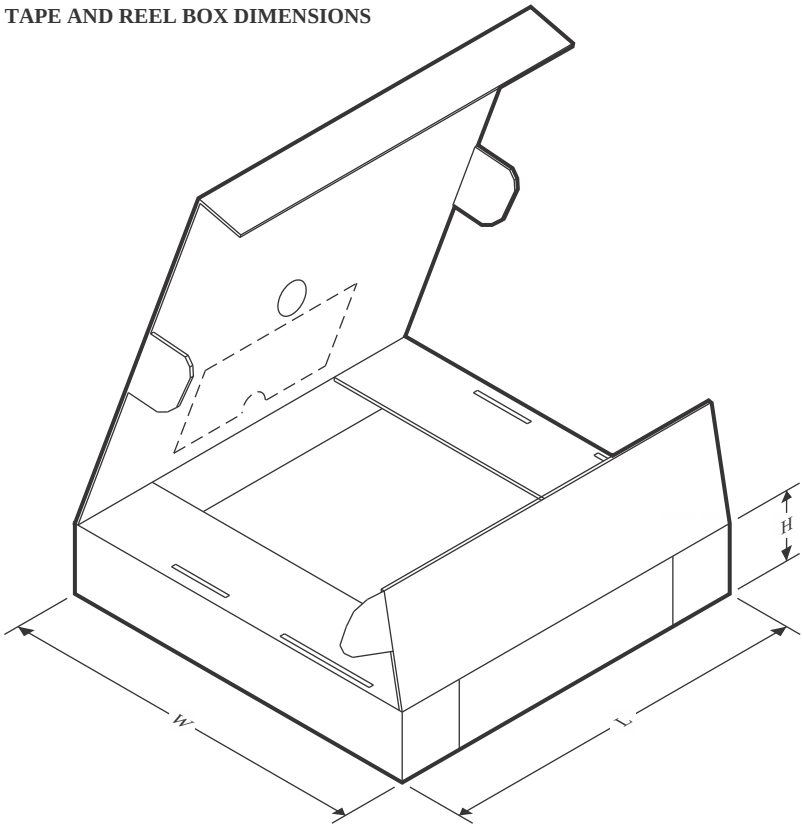

*All dimensions are nominal

Device	Package Type	Package Drawing	Pins	SPQ	Length (mm)	Width (mm)	Height (mm)
SN74ALVCH16271DGGR	TSSOP	DGG	56	2000	367.0	367.0	45.0

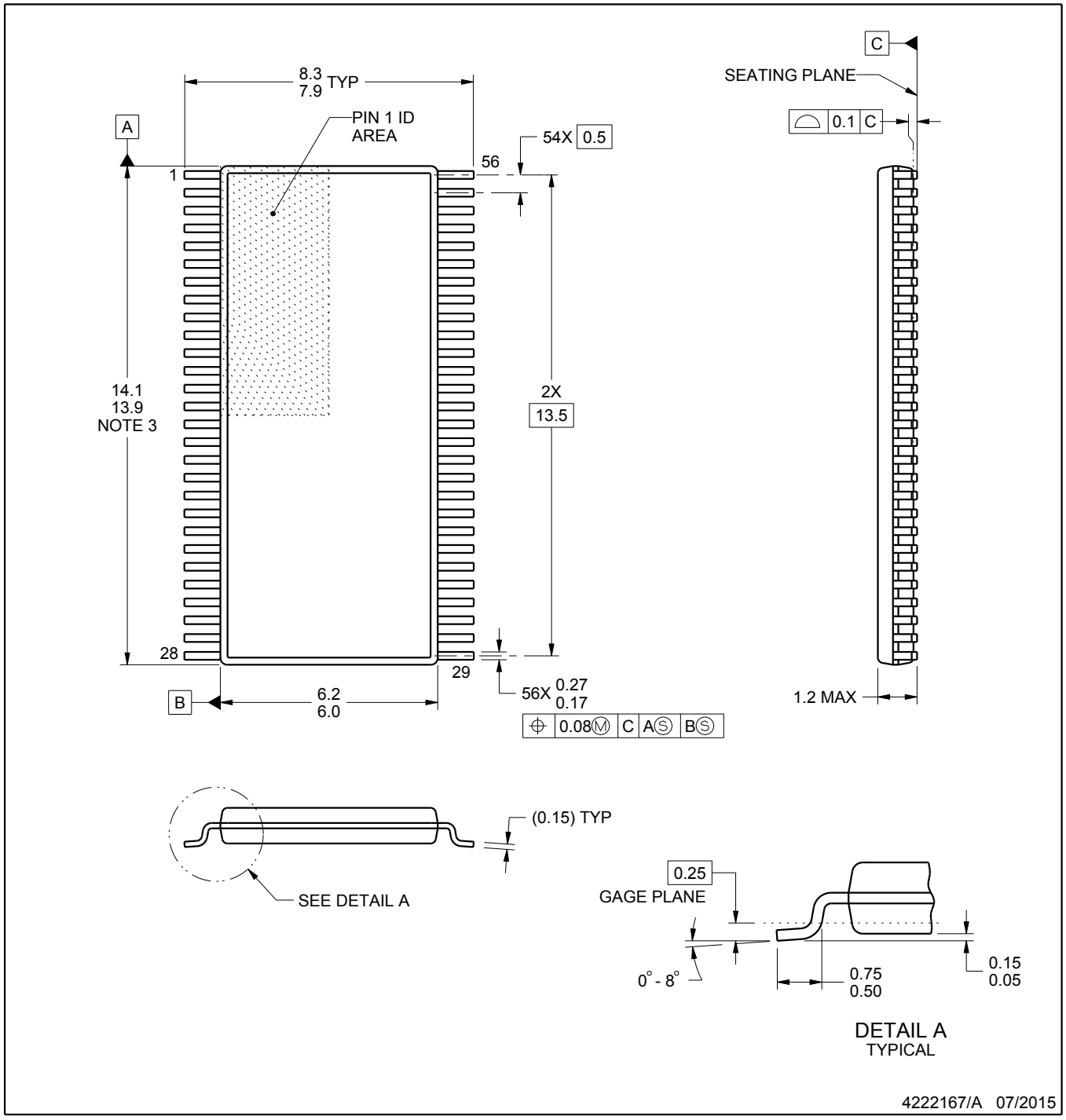

NOTES:

1. All linear dimensions are in millimeters. Any dimensions in parenthesis are for reference only. Dimensioning and tolerancing per ASME Y14.5M.
2. This drawing is subject to change without notice.
3. This dimension does not include mold flash, protrusions, or gate burrs. Mold flash, protrusions, or gate burrs shall not exceed 0.15 mm per side.
4. Reference JEDEC registration MO-153.

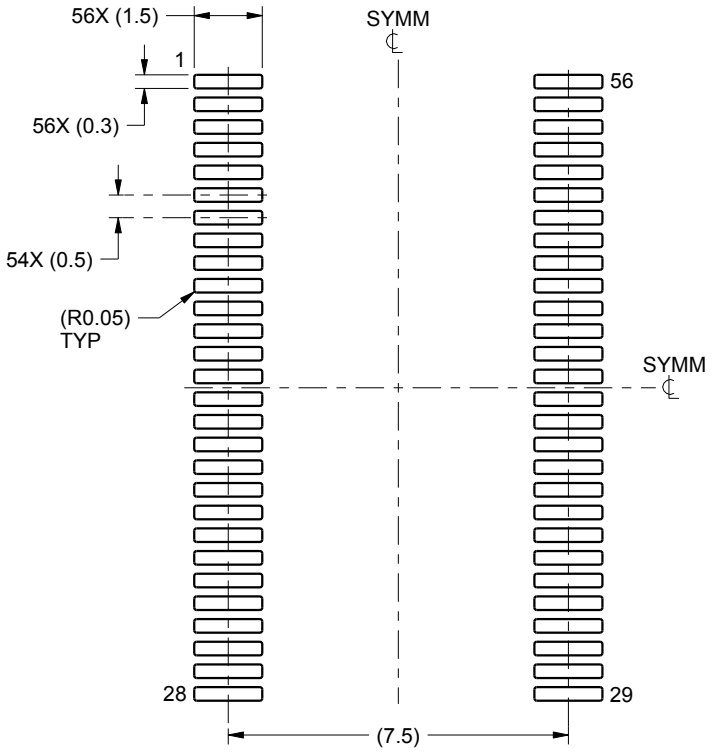

LAND PATTERN EXAMPLE
SCALE:6X

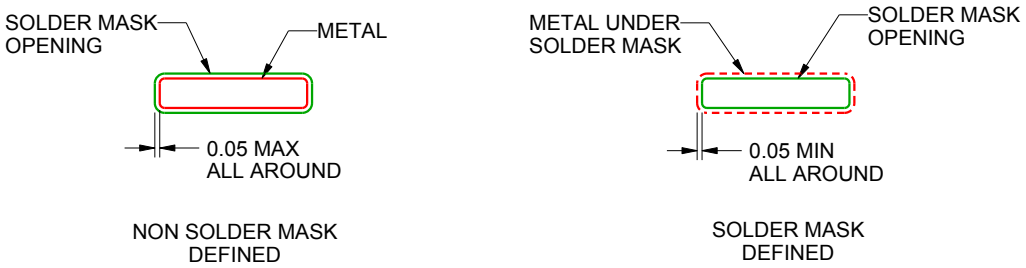

SOLDER MASK DETAILS

4222167/A 07/2015

NOTES: (continued)

5. Publication IPC-7351 may have alternate designs.
6. Solder mask tolerances between and around signal pads can vary based on board fabrication site.

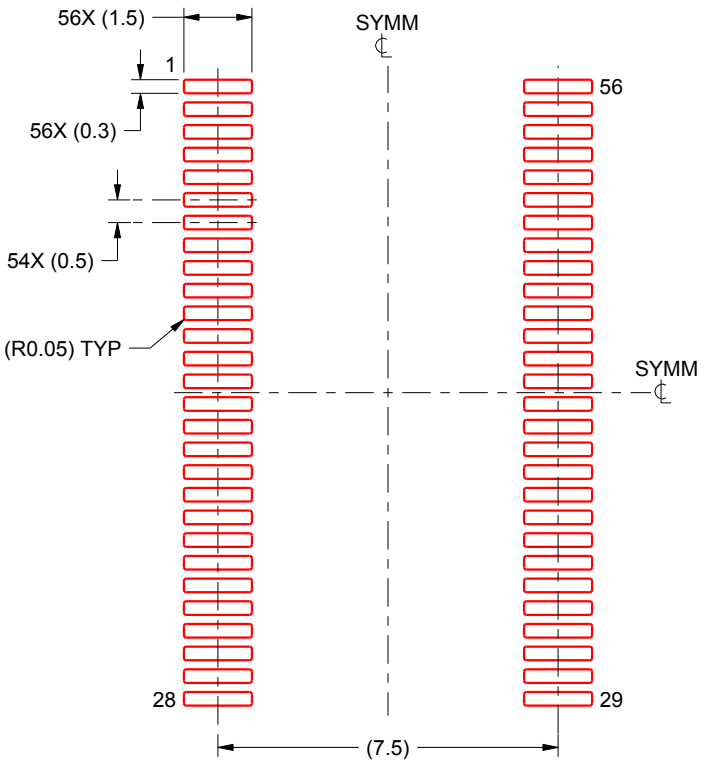

SOLDER PASTE EXAMPLE
BASED ON 0.125 mm THICK STENCIL
SCALE:6X

4222167/A 07/2015

NOTES: (continued)

7. Laser cutting apertures with trapezoidal walls and rounded corners may offer better paste release. IPC-7525 may have alternate design recommendations.
8. Board assembly site may have different recommendations for stencil design.

IMPORTANT NOTICE AND DISCLAIMER

TI PROVIDES TECHNICAL AND RELIABILITY DATA (INCLUDING DATA SHEETS), DESIGN RESOURCES (INCLUDING REFERENCE DESIGNS), APPLICATION OR OTHER DESIGN ADVICE, WEB TOOLS, SAFETY INFORMATION, AND OTHER RESOURCES “AS IS” AND WITH ALL FAULTS, AND DISCLAIMS ALL WARRANTIES, EXPRESS AND IMPLIED, INCLUDING WITHOUT LIMITATION ANY IMPLIED WARRANTIES OF MERCHANTABILITY, FITNESS FOR A PARTICULAR PURPOSE OR NON-INFRINGEMENT OF THIRD PARTY INTELLECTUAL PROPERTY RIGHTS.

These resources are intended for skilled developers designing with TI products. You are solely responsible for (1) selecting the appropriate TI products for your application, (2) designing, validating and testing your application, and (3) ensuring your application meets applicable standards, and any other safety, security, regulatory or other requirements.

These resources are subject to change without notice. TI grants you permission to use these resources only for development of an application that uses the TI products described in the resource. Other reproduction and display of these resources is prohibited. No license is granted to any other TI intellectual property right or to any third party intellectual property right. TI disclaims responsibility for, and you will fully indemnify TI and its representatives against, any claims, damages, costs, losses, and liabilities arising out of your use of these resources.

TI’s products are provided subject to TI’s Terms of Sale or other applicable terms available either on ti.com or provided in conjunction with such TI products. TI’s provision of these resources does not expand or otherwise alter TI’s applicable warranties or warranty disclaimers for TI products.

TI objects to and rejects any additional or different terms you may have proposed.

Mailing Address: Texas Instruments, Post Office Box 655303, Dallas, Texas 75265
Copyright © 2025, Texas Instruments Incorporated