OPA3S2859-EP Enhanced Product, Dual-Channel, 900-MHz, 2.2-nV/√Hz, Programmable Gain Transimpedance Amplifier

1 Features

- Gain bandwidth product: 900 MHz
- Internal switches for programmable gain
- High impedance FET inputs
- Input voltage noise: 2.2 nV/√Hz
- Slew rate: 350 V/µs
- Supply voltage range: 3.3 V to 5.25 V
- Quiescent current: 22 mA/channel
- Power down mode I_Q: 75 µA
- Temperature range: -55 °C to 125 °C
- Supports defense, aerospace, and medical applications
  - Controlled baseline
  - One assembly and test site
  - One fabrication site
  - Extended product life cycle
  - Extended product-change notification
  - Product traceability

2 Applications

- Switchable transimpedance amplifier
- Smart munitions
- Laser distance measurement
- Optical time domain reflectometry (OTDR)
- Silicon photomultiplier (SiPM) buffer
- Photomultiplier tube post amplifier
- High speed programmable gain amplifier

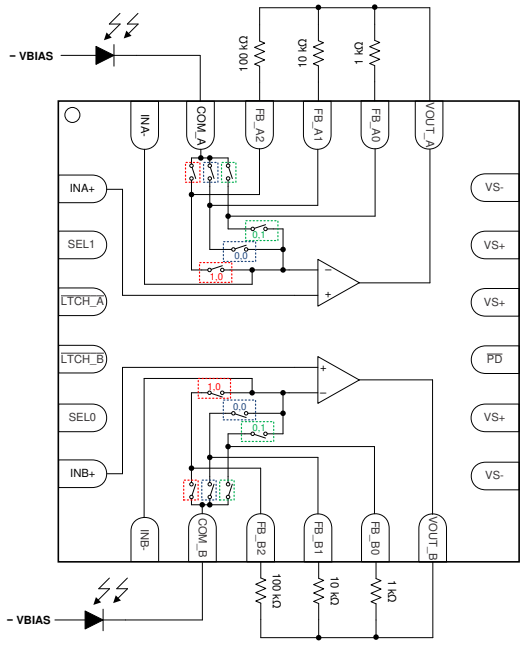

Block Diagram

3 Description

The OPA3S2859-EP is a wideband, low-noise programmable gain amplifier with CMOS inputs for wideband transimpedance and voltage amplifier applications. When the device is configured as a transimpedence amplifier (TIA), the 0.9-GHz gain bandwidth product (GBWP) enables high closed-loop bandwidths in low-capacitance photodiode (PD) applications.

The three internal switched feedback paths along with an optional parallel non-switched feedback path allows for up to four selectable gain configurations. The internal switches minimize parasitic contributions to increase performance compared to systems that use discrete external switches. Each switch is optimized for feedback resistor values ranging from < 1 kΩ to > 100 kΩ for wide dynamic range applications. The selected switch path is controlled for both channels using a 2-wire parallel interface. For each channel selected, the gain path can also be held constant by exerting the latch pin, which subsequently disables switch control for the selected channel and prevents the channel from changing gain.

Device Information(1)

PART NUMBER	PACKAGE	BODY SIZE (NOM)
OPA3S2859-EP	WQFN (24)	4.00 mm × 4.00 mm

(1) See the package option addendum at the end of the data sheet for all available packages.

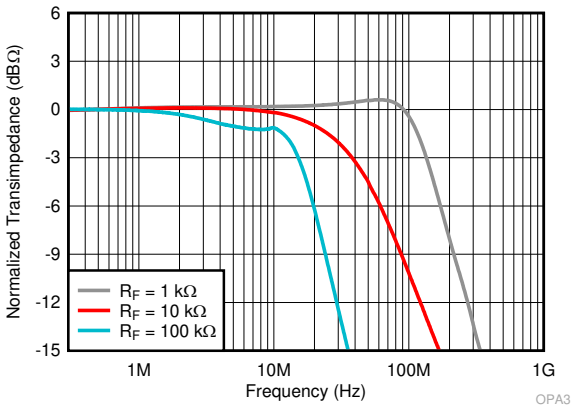

Transimpedance Bandwidth vs Frequency

An IMPORTANT NOTICE at the end of this data sheet addresses availability, warranty, changes, use in safety-critical applications, intellectual property matters and other important disclaimers. PRODUCTION DATA.

Table of Contents

1 Features....1
2 Applications....1
3 Description....1
4 Revison History....2
5 Pin Configuration and Functions....3
6 Specifications....5
6.1 Absolute Maximum Ratings....5
6.2 ESD Ratings....5
6.3 Recommended Operating Conditions....5
6.4 Thermal Information....5
6.5 Electrical Characteristics....6
6.6 Switching Characteristics....8
6.7 Typical Characteristics....10
7 Parameter Measurement Information....16
8 Detailed Description....17
8.1 Overview....17
8.2 Functional Block Diagram....17
8.3 Feature Description....18
8.4 Device Functional Modes....18
9 Application and Implementation....20
9.1 Application Information....20
9.2 Typical Application....20
10 Power Supply Recommendations....22
11 Layout....22
11.1 Layout Guidelines....22
11.2 Layout Examples....22
12 Device and Documentation Support....25
12.1 Device Support....25
12.2 Documentation Support....25
12.3 Receiving Notification of Documentation Updates....25
12.4 Support Resources....25
12.5 Trademarks....25
12.6 Electrostatic Discharge Caution....25
12.7 Glossary....25
13 Mechanical, Packaging, and Orderable Information....25

4 Revison History

NOTE: Page numbers for previous revisions may differ from page numbers in the current version.

Changes from Revision A (April 2021) to Revision B (December 2021)	Page
• Changed the status of the data sheet from: *Advanced Information* to: *Production Data*	1

Copyright © 2021 Texas Instruments Incorporated

5 Pin Configuration and Functions

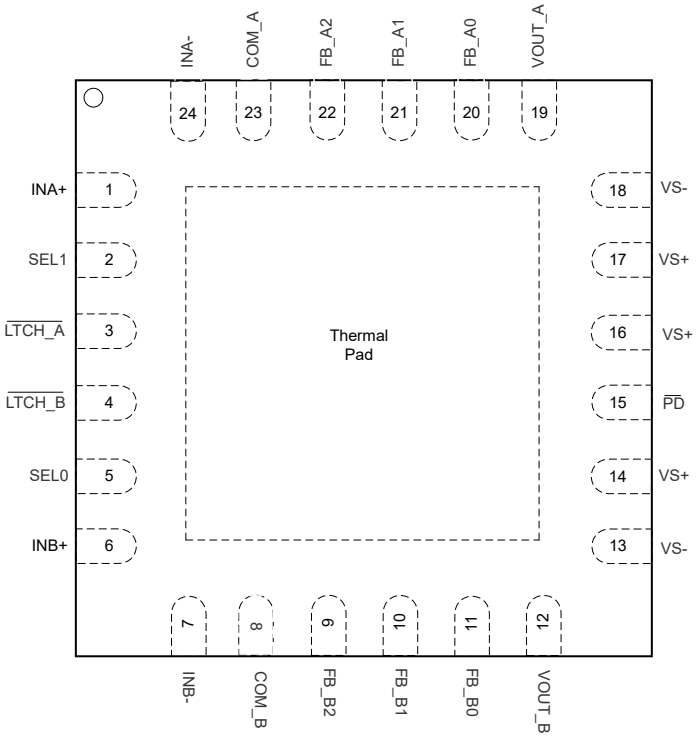

Figure 5-1. RTW Package
24-Pin WQFN With Exposed Thermal Pad
Top View

Table 5-1. Pin Functions

PIN		I/O	DESCRIPTION
NAME	NO.		
COM_A	23	I	Photodiode input – Channel A
COM_B	8	I	Photodiode input – Channel B
FB_A0	20	I	Feedback connection to Channel A – TIA Gain Resistor (Low gain, optimized for gain in < 10 kΩ range)
FB_A1	21	I	Feedback connection to Channel A – TIA Gain Resistor (Mid gain, optimized for gain in 10 kΩ – 100 kΩ range)
FB_A2	22	I	Feedback connection to Channel A – TIA Gain Resistor (High gain, optimized for gain in > 100 kΩ range)
FB_B0	11	I	Feedback connection to Channel B – TIA Gain Resistor (Low gain, optimized for gain in < 10 kΩ range)
FB_B1	10	I	Feedback connection to Channel B – TIA Gain Resistor (Mid gain, optimized for gain in 10 kΩ – 100 kΩ range)
FB_B2	9	I	Feedback connection to Channel B – TIA Gain Resistor (High gain, optimized for gain in > 100 kΩ range)
INA-	24	I	Negative (inverting) input for amplifier A
INA+	1	I	Positive (noninverting) input for amplifier A
INB-	7	I	Negative (inverting) input for amplifier B
INB+	6	I	Positive (noninverting) input for amplifier B

Table 5-1. Pin Functions (continued)

PIN		I/O	DESCRIPTION
NAME	NO.		
$\overline{\text{LTCH_A}}$	3	I	Latch control input for Channel A. $\overline{\text{LTCH_A}}$ = logic high (default) = transparent mode, gain setting changes based on SEL0 and SEL1 pins are reflected at the output. $\overline{\text{LTCH_A}}$ = logic low = latch mode = changing SEL0 and SEL1 pins does not affect the gain configuration of amplifier.
$\overline{\text{LTCH_B}}$	4	I	Latch control input for Channel B. $\overline{\text{LTCH_B}}$ = logic high (default) = transparent mode, gain setting changes based on SEL0 and SEL1 pins are reflected at the output. $\overline{\text{LTCH_B}}$ = logic low = latch mode = changing SEL0 and SEL1 pins does not affect the gain configuration of amplifier.
$\overline{\text{PD}}$	15	I	Power down pin. $\overline{\text{PD}}$ = logic high (default) = normal operation, $\overline{\text{PD}}$ = logic low = power down mode.
SEL0	5	I	TIA gain selection. SEL0 = logic high (default). See Table 5-2 for details.
SEL1	2	I	TIA gain selection. SEL1 = logic high (default). See Table 5-2 for details.
VOUT_A	19	O	Output of amplifier A
VOUT_B	12	O	Output of amplifier B
VS-	13, 18	I	Negative (lowest) power supply
VS+	14, 16, 17	I	Positive (highest) power supply
Thermal pad		—	Connect the thermal pad to the most negative power supply (pin 13 and 18) of the device under test (DUT).

Table 5-2. Select Pin Decoder

SEL1	SEL0	Gain
LOW	HIGH	Low Gain, optimized for gain in < 10 kΩ range
LOW	LOW	Mid Gain, optimized for gain in 10 kΩ – 100 kΩ range
HIGH	LOW	High Gain, optimized for gain in > 100 kΩ range
HIGH (Default)	HIGH (Default)	External Gain. All internal switches open

Copyright © 2021 Texas Instruments Incorporated

6 Specifications

6.1 Absolute Maximum Ratings

over operating free-air temperature range (unless otherwise noted)[1]

		MIN	MAX	UNIT
V_S	Total supply voltage (V_{S+} - V_{S-})		5.5	V
V_{IN+}, V_{IN-}	Input voltage	(V_{S-}) – 0.5	(V_{S+}) + 0.5	V
V_{ID}	Differential input voltage		1	V
V_{OUT}	Output voltage	(V_{S-}) – 0.5	(V_{S+}) + 0.5	V
I_{IN}	Continuous input current		±4	mA
I_{OUT}	Continuous output current[2]		25	mA
T_J	Junction temperature		150	°C
T_A	Operating free-air temperature	–55	125	°C
T_{stg}	Storage temperature	–65	150	°C

(1) Operation outside the *Absolute Maximum Ratings* may cause permanent device damage. Absolute maximum ratings do not imply functional operation of the device at these or any other conditions beyond those listed under *Recommended Operating Conditions*. If briefly operating outside the *Recommended Operating Conditions* but within the *Absolute Maximum Ratings*, the device may not sustain damage, but it may not be fully functional. Operating the device in this manner may affect device reliability, functionality, performance, and shorten the device lifetime.
(2) Long-term continuous output current for electromigration limits

6.2 ESD Ratings

			VALUE	UNIT
$V_{(ESD)}$	Electrostatic discharge	Human body model (HBM), per ANSI/ESDA/JEDEC JS-001, all pins[1]	±1500	V
		Charged device model (CDM), per JEDEC specification JEDEC JS-002, all pins[2]	±1000	

(1) JEDEC document JEP155 states that 500-V HBM allows safe manufacturing with a standard ESD control process.
(2) JEDEC document JEP157 states that 250-V CDM allows safe manufacturing with a standard ESD control process.

6.3 Recommended Operating Conditions

over operating free-air temperature range (unless otherwise noted)

		MIN	NOM	MAX	UNIT
V_S	Total supply voltage (V_{S+} - V_{S-})	3.3	5	5.25	V
T_A	Ambient temperature	–55		125	°C

6.4 Thermal Information

THERMAL METRIC[1]		OPA3S2859-EP RTW 24 PINS	UNIT
$R_{\theta JA}$	Junction-to-ambient thermal resistance	54.1	°C/W
$R_{\theta JC(top)}$	Junction-to-case (top) thermal resistance	55.6	°C/W
$R_{\theta JB}$	Junction-to-board thermal resistance	30.6	°C/W
Ψ_{JT}	Junction-to-top characterization parameter	2.5	°C/W
Ψ_{JB}	Junction-to-board characterization parameter	30.6	°C/W
$R_{\theta JC(bot)}$	Junction-to-case (bottom) thermal resistance	13.9	°C/W

(1) For more information about traditional and new thermal metrics, see the Semiconductor and IC Package Thermal Metrics application report.

6.5 Electrical Characteristics

V_{S+} = 5 V, V_{S-} = 0 V, R_L = 200 Ω, output load is referenced to midsupply, input common-mode biased at midsupply, and T_A ≈ +25°C (unless otherwise noted)

PARAMETER		TEST CONDITIONS	MIN	TYP	MAX	UNIT
AC PERFORMANCE						
SSBW	Small-signal transimpedance bandwidth(1)	V_{OUT} = 100 mV_{PP}, Gain = 1 kΩ, C_{IN}= 4 pF		130		MHz
		V_{OUT} = 100 mV_{PP}, Gain = 10 kΩ, C_{IN} = 4 pF		40		MHz
		V_{OUT} = 100 mV_{PP}, Gain = 100kΩ, Cin = 4 pF		14		MHz
GBWP	Gain-bandwidth product			900		MHz
	Slew rate (10% - 90%)	V_{OUT} = 2-V step		350		V/µs
e_n	Input-referred voltage noise	f = 1 MHz		2.2		nV/√Hz
Z_{OUT}	Closed-loop output impedance	f = 1 MHz		0.02		Ω
DC PERFORMANCE						
A_{OL}	Open-loop voltage gain	f = DC	70	76		dB
A_{OL}	Open-loop voltage gain	T_A = -55°C to +125°C	64			dB
V_{OS}	Input offset voltage	T_A = -55°C to +125°C	–8	±0.9	8	mV
$\Delta V_{OS}/\Delta T$	Input offset voltage drift	T_A = -55°C to +125°C		–2		µV/°C
I_{BN}, I_{BI}	Input bias current(2)		–50		50	pA
I_{BOS}	Input offset current(2)		-50		50	pA
CMRR	Common-mode rejection ratio	V_{CM} = ±0.5 V (from midsupply), T_A = -55°C to +125°C	67	78		dB
INPUTS						
C_{IN+}	Non-inverting input capacitance			1.4		pF
C_{IN-}	Inverting input capacitance (3)			3		pF
V_{IH}	Common-mode input range (high)	CMRR > 62 dB , T_A = -55°C to +125°C	3.4	3.6		V
V_{IH}	Common-mode input range (high)	CMRR > 62 dB , V_{S+} = 3.3 V, T_A = -55°C to +125°C	1.7	1.9		V
V_{IL}	Common-mode input range (low)	CMRR > 62 dB , T_A = -55°C to +125°C		0	0.4	V
V_{IL}	Common-mode input range (low)	CMRR > 62 dB , V_{S+} = 3.3 V, T_A = -55°C to +125°C		0	0.4	V
OUTPUTS						
V_{OH}	Output voltage (high)	T_A = -55°C to +125°C	3.95	4.1		V
V_{OH}	Output voltage (high)	V_{S+} = 3.3 V, T_A = -55°C to +125°C	2.3	2.4		V
V_{OL}	Output voltage(low)	T_A = -55°C to +125°C		1.1	1.2	V
V_{OL}	Output voltage(low)	V_{S+} = 3.3 V, T_A = -55°C to +125°C		1	1.15	V
I_{O_LIN}	Linear output drive (source and sink)	R_L = 10 Ω, A_{OL} > 52 dB	65	74		mA
I_{O_LIN}	Linear output drive (source and sink)	R_L = 10 Ω, A_{OL} > 52 dB, T_A = -55°C to +125°C	58			mA
CHANNEL-TO-CHANNEL MATCHING						
	Crosstalk (output-referred)	f = 1 MHz, Gain = 100 kΩ, V_{OUT} = 100 mV_{PP}		-70		dB
	Offset voltage mismatch	T_A = -55°C to +125°C	-10		10	mV
	Offset current mismatch		-20		20	pA

Copyright © 2021 Texas Instruments Incorporated

6.5 Electrical Characteristics (continued)

V_{S+} = 5 V, V_{S-} = 0 V, R_L = 200 Ω, output load is referenced to midsupply, input common-mode biased at midsupply, and T_A ≈ +25°C (unless otherwise noted)

PARAMETER		TEST CONDITIONS	MIN	TYP	MAX	UNIT
POWER SUPPLY						
I_Q	Quiescent current (both channels)	V_{S+} = 5 V		44	53	mA
		V_{S+} = 5 V, T_A = +125°C		51	63	mA
		V_{S+} = 5 V, T_A = -55°C		39	47	mA
PSRR+	Power Supply Rejection Ratio	T_A = -55°C to +125°C	72	85		dB
PSRR-	Power Supply Rejection Ratio	T_A = -55°C to +125°C	66	72		dB
POWER DOWN						
	Disable voltage threshold	Voltage referenced to V_{S+}, amplifier OFF below this voltage, T_A = -55°C to +125°C	V_{S+} - 1.5	V_{S+} - 1.3		V
	Enable voltage threshold	Voltage referenced to V_{S+}, amplifier ON above this voltage, T_A = -55°C to +125°C		V_{S+} - 1.2	V_{S+} - 0.8	V
	Power-down quiescent current			75	140	µA
	Power-down quiescent current	T_A = -55°C to +125°C			170	µA
	$\overline{PD}$ bias current	$V_{\overline{PD}}$ = V_{S-} or V_{S+}		6		µA
	$\overline{PD}$ bias current	$V_{\overline{PD}}$ = V_{S-} or V_{S+} , T_A = -55°C to +125°C			22	µA
	$\overline{PD}$ bias current	$V_{\overline{PD}}$ at switching threshold		160		µA
	$\overline{PD}$ bias current	$V_{\overline{PD}}$ at switching threshold, T_A = -55°C to +125°C			405	µA
	Turnon time delay	Time to V_{OUT} = 90% of final value		90		ns
	Turnoff time delay	Time to V_{OUT} = 10% of final value		330		ns

(1) C_{IN} = Photodiode capacitance + PCB capacitance. Photodiode capacitance is 3.3 pF and estimated PCB capacitance is 0.7 pF.
(2) Leakage currents from switches are not included in this measurement.
(3) C_{IN-} refers to the capacitance at the inverting input of the amplifier. C_{IN-} = $C_{IN-(CM)}$ + C_{DIFF} + Switch capacitance on the amplifier inverting pin (ON capacitance of the closed switch + OFF capacitance for open switches).

Copyright © 2021 Texas Instruments Incorporated

6.6 Switching Characteristics

V_{S+} = 5 V, V_{S-} = 0 V, input common-mode biased at midsupply, R_{F0} = 1 kΩ, R_{F1} = 10 kΩ, R_{F2} = 100 kΩ, R_L = 200 Ω, output load is referenced to midsupply, and T_A ≈ +25°C (unless otherwise noted), see figure 7-1 for schematic configuration. (1) (2)

PARAMETER		TEST CONDITIONS	MIN	TYP	MAX	UNIT
GAIN SWITCHES						
	Switch transition-time (5)	SW_0 OFF to SW_1 ON		160		ns
		SW_0 OFF to SW_2 ON		230		
		SW_1 OFF to SW_0 ON		80		
		SW_1 OFF to SW_2 ON		230		
		SW_2 OFF to SW_0 ON		80		
		SW_2 OFF to SW_1 ON		110		
C_{COM0}	COM capacitance (3) (6)	SW_{COM0} ON; SW_{COM1} and SW_{COM2} OFF		1.3		pF
C_{COM1}		SW_{COM1} ON; SW_{COM0} and SW_{COM2} OFF		1.2		
C_{COM2}		SW_{COM2} ON; SW_{COM0} and SW_{COM1} OFF		1.2		
C_{COM_OPEN}		SW_{COM0} , SW_{COM1} and SW_{COM2} OFF		1.2		
C_{FB0}	FB capacitance (5) (7)	SW_0 ON		1.9		
C_{FB1}		SW_1 ON		1.6		
C_{FB2}		SW_2 ON		1.5		
C_{FB0_OPEN}		SW_0 OFF		1.4		
C_{FB1_OPEN}		SW_1 OFF		1.2		
C_{FB2_OPEN}		SW_2 OFF		1.1		
R_{ON_COM0}	On resistance (8) (9)			80		Ω
R_{ON_FB0}				38		
R_{ON_COM1}				125		
R_{ON_FB1}				37		
R_{ON_COM2}				375		
R_{ON_FB2}				35		
	On resistance channel-to-channel matching (3) (4)	SW_{COM0} for Channel A and B		0.15		Ω
		SW_{FB0} for Channel A and B		0.4		
		SW_{COM1} for Channel A and B		0.45		
		SW_{FB1} for Channel A and B		0.07		
		SW_{COM2} for Channel A and B		3		
		SW_{FB2} for Channel A and B		0.12		

Copyright © 2021 Texas Instruments Incorporated

6.6 Switching Characteristics (continued)

V_{S+} = 5 V, V_{S-} = 0 V, input common-mode biased at midsupply, R_{F0} = 1 kΩ, R_{F1} = 10 kΩ, R_{F2} = 100 kΩ, R_L = 200 Ω, output load is referenced to midsupply, and T_A ≈ +25°C (unless otherwise noted), see figure 7-1 for schematic configuration. (1) (2)

PARAMETER		TEST CONDITIONS	MIN	TYP	MAX	UNIT
LOGIC PIN FUNCTION (LATCH, SEL)						
	Logic low threshold	Logic low below the threshold voltage, T_A = -55°C to +125°C	V_{S+} - 1.5	V_{S+} - 1.3		V
	Logic high threshold	Logic high above the threshold voltage, T_A = -55°C to +125°C		V_{S+} - 1.2	V_{S+} - 0.8	V
	Bias current	V_{PIN} = V_{S-} or V_{S+}		6		µA
	Bias current	V_{PIN} = V_{S-} or V_{S+} , T_A = -55°C to +125°C			22	µA
	Bias current	V_{PIN} at switching threshold		160		µA
	Bias current	V_{PIN} at switching threshold, T_A = -55°C to +125°C			405	µA
	Setup time		100			ns
	Hold time		100			ns

(1) All the specifications apply for both Channels A and B, unless otherwise noted.
(2) When switching from one gain condition to another, the new gain switches are closed before opening the previous gain switches (make-before-break).
(3) SW_{COM0}, SW_{COM1}, SW_{COM2} refer to switch on the common-mode side (COM) for the different gain options.
(4) SW_{FB0}, SW_{FB1}, SW_{FB2} refer to switch on the feedback side (FB) for the different gain options.
(5) SW_0, SW_1, SW_2 refers to the two switches needed for a given gain condition. For example, SW0 refers to SW_{COM0} and SW_{FB0}.
(6) C_{COM0}, C_{COM1}, C_{COM2} is the capacitance at the COM pin for different gain options. It is equal to ON capacitance of closed switch + OFF capacitance of open switches.
(7) C_{FB0}, C_{FB1}, C_{FB2} is the capacitance at the FB_X pin. It is equal to ON capacitance of the gain option selected (SW_{COM0} + SW_{FB0} capacitance).
(8) R_{ON_COM0}, R_{ON_COM1}, R_{ON_COM2}, refer to ON resistance for the COM side switch.
(9) R_{ON_FB0}, R_{ON_FB1}, R_{ON_FB2}, refer to ON resistance for the FB side switch.

6.7 Typical Characteristics

V_{S+} = +2.5 V, V_{S-} = -2.5 V, R_L = 200 Ω, C_{IN} = 4 pF, output load is referenced to mid-supply, input common-mode biased at mid-supply, and T_A ≈ +25°C (unless otherwise noted)

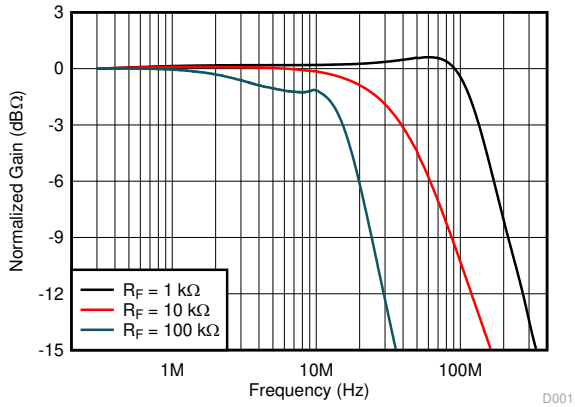

V_{OUT} = 100 mV_{PP}

Figure 6-1. Small-Signal Frequency Response vs Gain

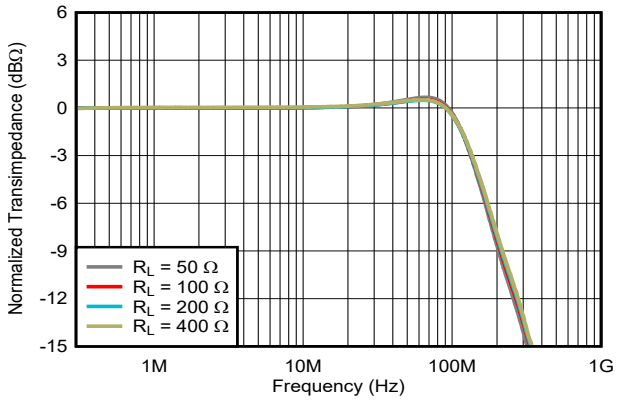

V_{OUT} = 100 mV_{PP}, R_F = 1 kΩ

Figure 6-2. Small-Signal Frequency Response vs Output Load

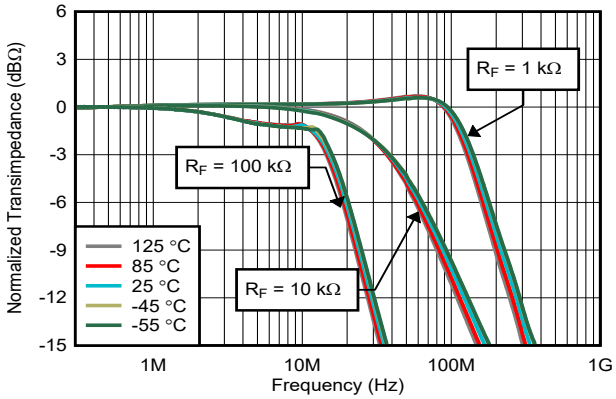

V_{OUT} = 100 mV_{PP}

Figure 6-3. Small-Singal Frequency Response vs Ambient Temperature

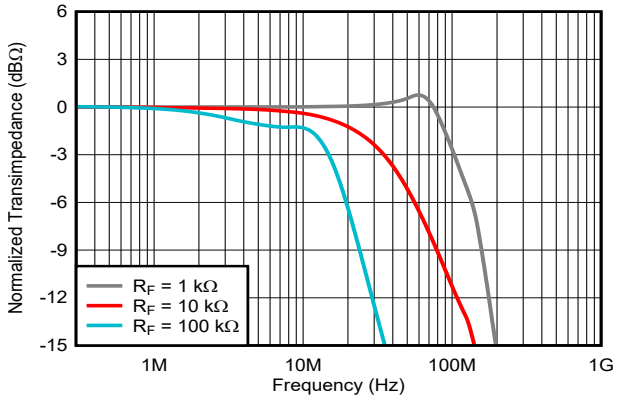

V_{OUT} = 2 V_{PP}

Figure 6-4. Large-Signal Frequency Response vs Gain

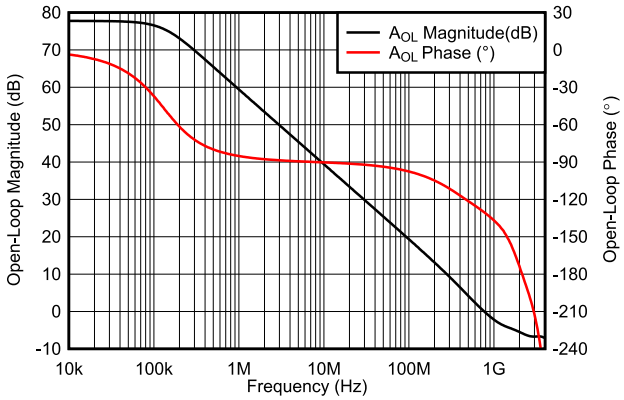

V_{OUT} = 100 mV_{PP}

Figure 6-5. Open-Loop Magnitude and Phase vs Frequency

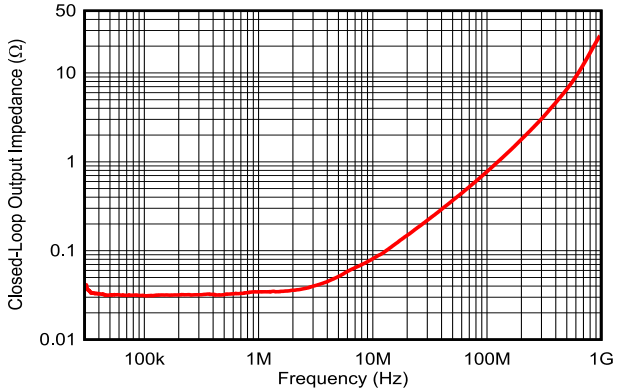

Figure 6-6. Closed-Loop Output Impedance vs Frequency

Copyright © 2021 Texas Instruments Incorporated

6.7 Typical Characteristics (continued)

V_{S+} = +2.5 V, V_{S-}= -2.5 V, R_L = 200 Ω, C_{IN} = 4 pF, output load is referenced to mid-supply, input common-mode biased at mid-supply, and T_A ≈ +25°C (unless otherwise noted)

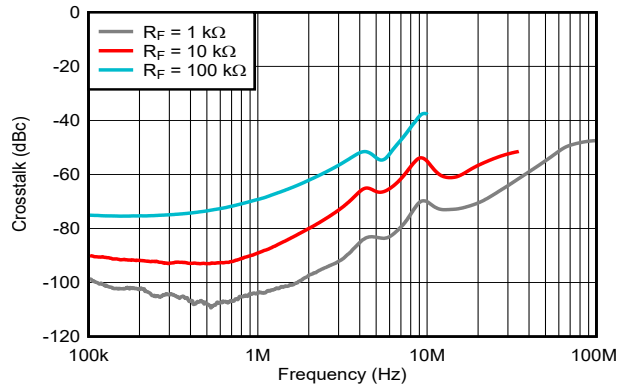

V_{OUT} = 2 V_{PP}

Figure 6-7. Large-Signal Crosstalk vs Gain

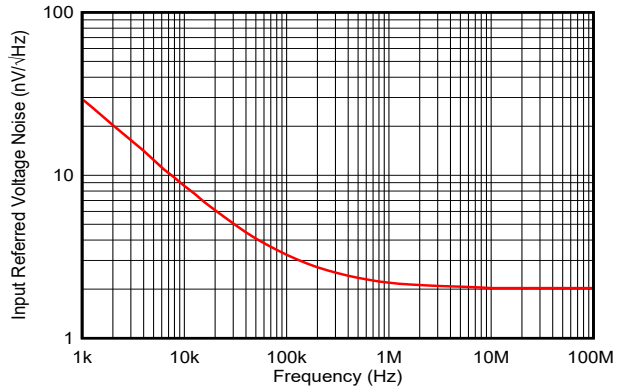

Figure 6-8. Voltage Noise Density vs Frequency

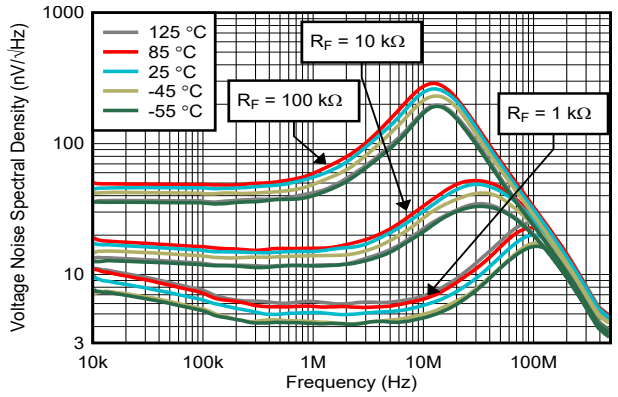

Figure 6-9. Voltage Noise Density vs Ambient Temperature

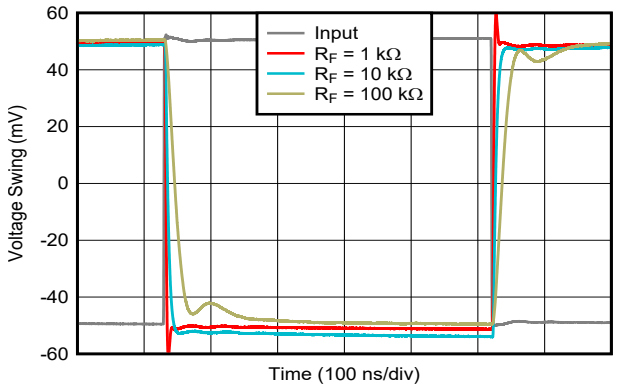

V_{OUT} = 100 mV_{PP}

Figure 6-10. Small-Signal Transient Response

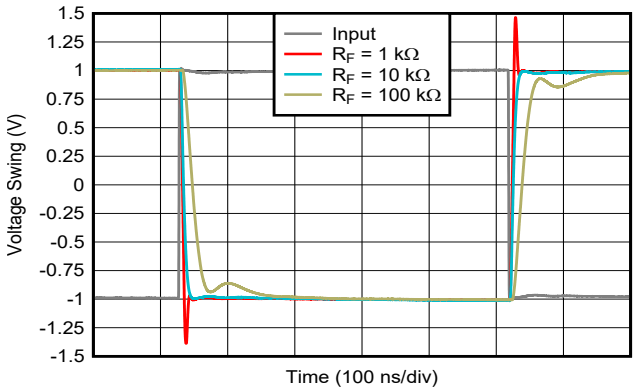

V_{OUT} = 2 V_{PP}

Figure 6-11. Large-Signal Transient Response

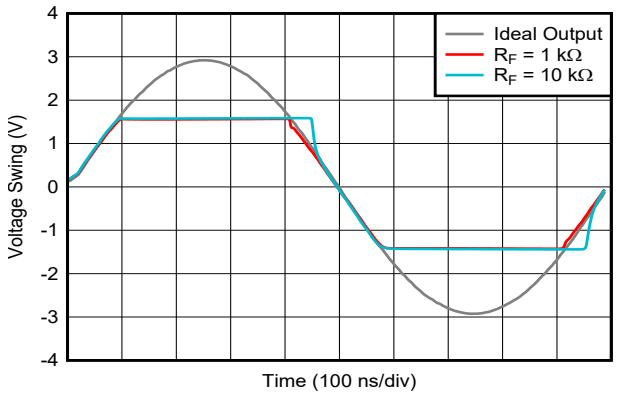

2X Output Overdrive

Figure 6-12. Output Overload Reponse − Low Gain Settings

6.7 Typical Characteristics (continued)

V_{S+} = +2.5 V, V_{S-}= -2.5 V, R_L = 200 Ω, C_{IN} = 4 pF, output load is referenced to mid-supply, input common-mode biased at mid-supply, and T_A ≈ +25°C (unless otherwise noted)

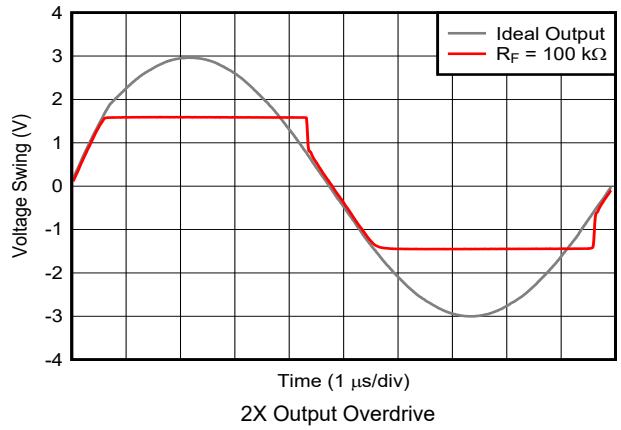

Figure 6-13. Output Overload Reponse − High Gain Setting

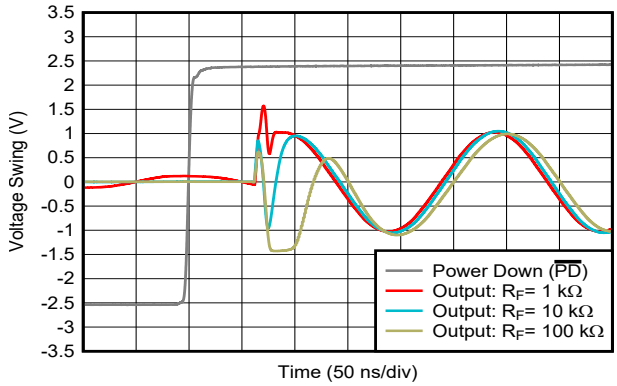

Figure 6-14. Turn-On Transient Response

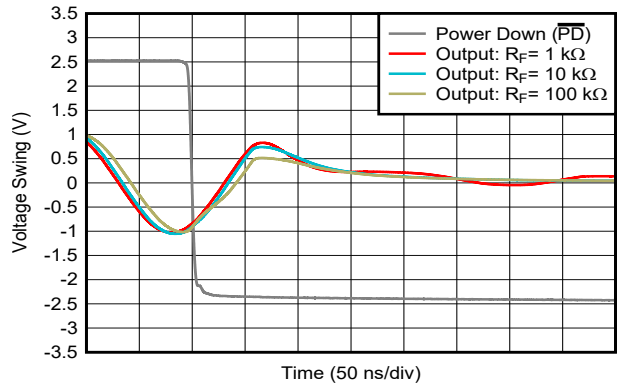

Figure 6-15. Turn-Off Transient Response

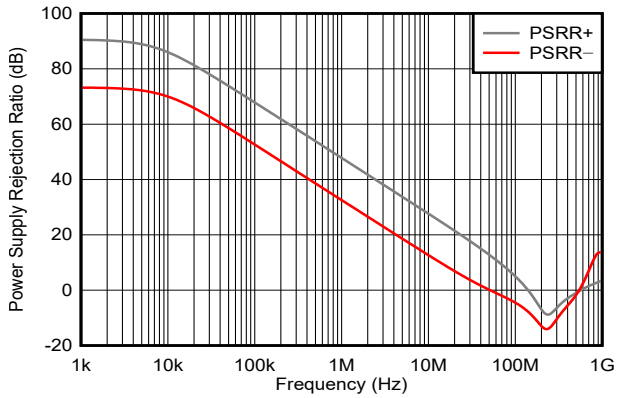

Figure 6-16. Power Supply Rejection Ratio vs Frequency

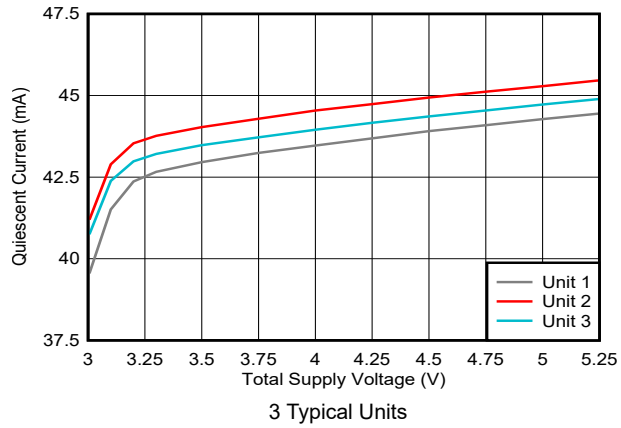

Figure 6-17. Quiescent Current (Both Channels) vs Supply Voltage

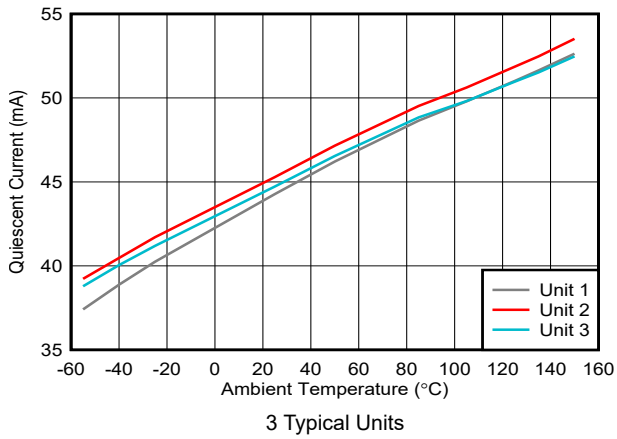

Figure 6-18. Quiescent Current (Both Channels) vs Ambient Temperature

Copyright © 2021 Texas Instruments Incorporated

6.7 Typical Characteristics (continued)

V_{S+} = +2.5 V, V_{S-} = -2.5 V, R_L = 200 Ω, C_{IN} = 4 pF, output load is referenced to mid-supply, input common-mode biased at mid-supply, and T_A ≈ +25°C (unless otherwise noted)

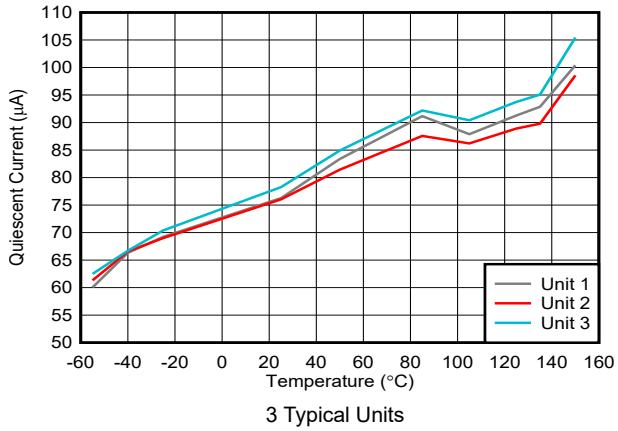

Figure 6-19. Quiescent Current (Amplifiers Disabled) vs Ambient Temperature

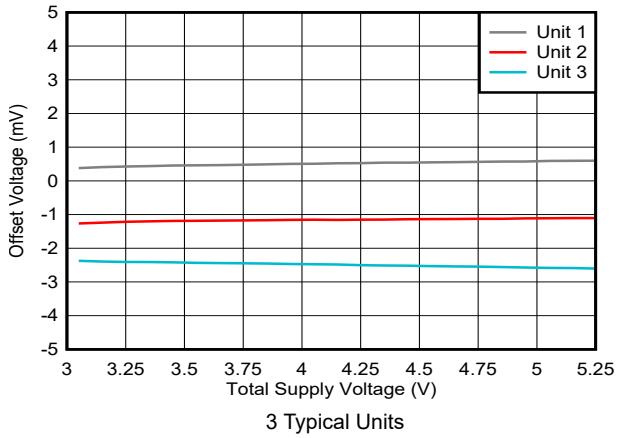

Figure 6-20. Offset Voltage vs Supply Voltage

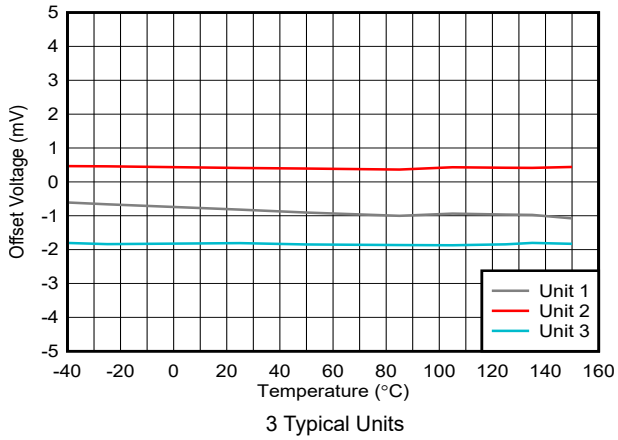

Figure 6-21. Offset Voltage vs Ambient Temperature

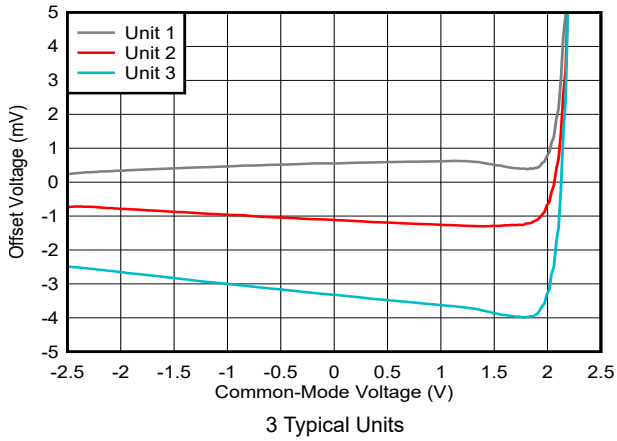

Figure 6-22. Offset Voltage vs Input Common-Mode Voltage

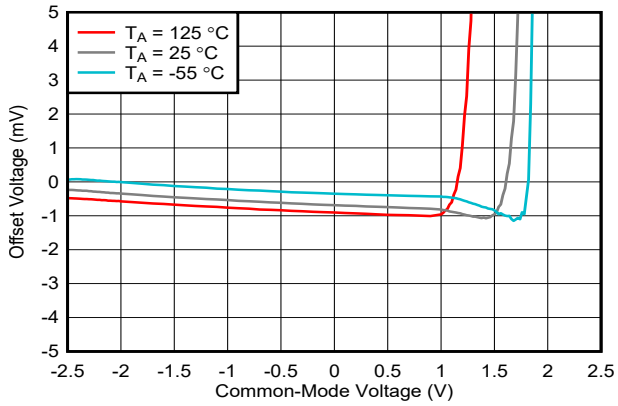

Figure 6-23. Offset Voltage vs Input Common-Mode Voltage vs Ambient Temperature

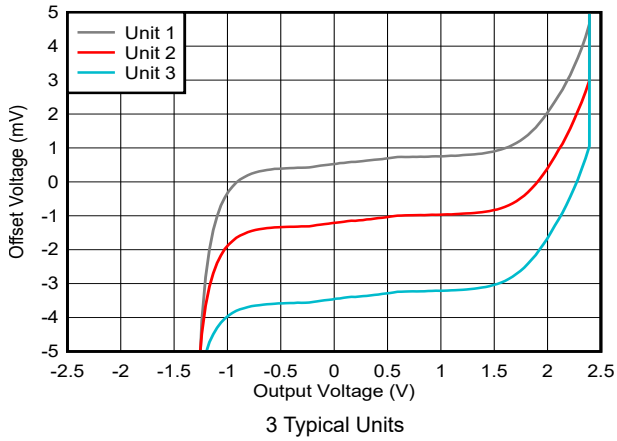

Figure 6-24. Offset Voltage vs Output Swing

6.7 Typical Characteristics (continued)

V_{S+} = +2.5 V, V_{S-} = -2.5 V, R_L = 200 Ω, C_{IN} = 4 pF, output load is referenced to mid-supply, input common-mode biased at mid-supply, and T_A ≈ +25°C (unless otherwise noted)

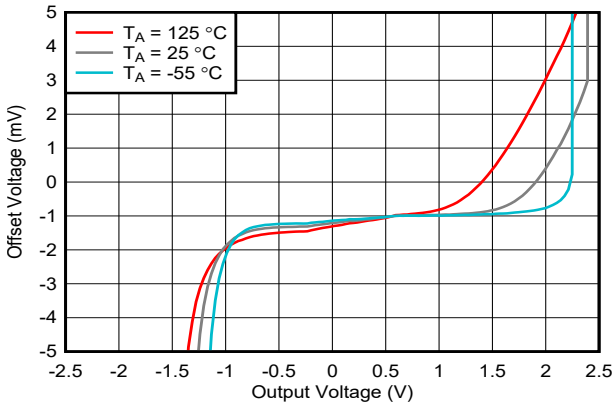

Figure 6-25. Offset Voltage vs Output Swing vs Ambient Temperature

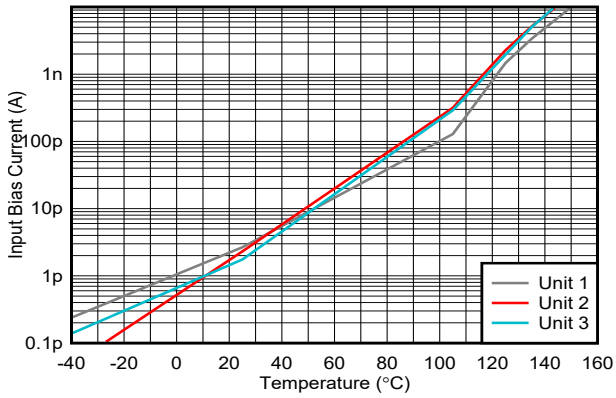

3 Typical Units

Figure 6-26. Input Bias Current vs Ambient Temperature

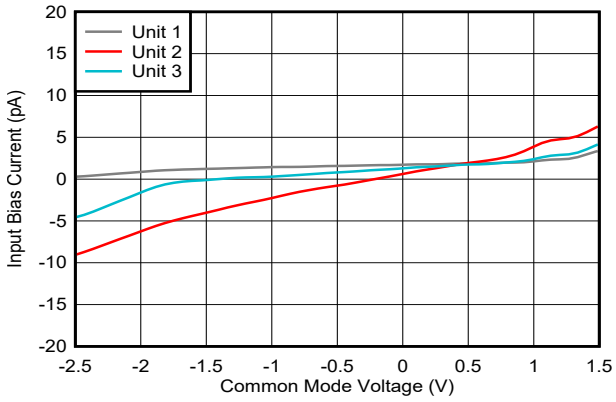

3 Typical Units

Figure 6-27. Input Bias Current vs Input Common-Mode Voltage

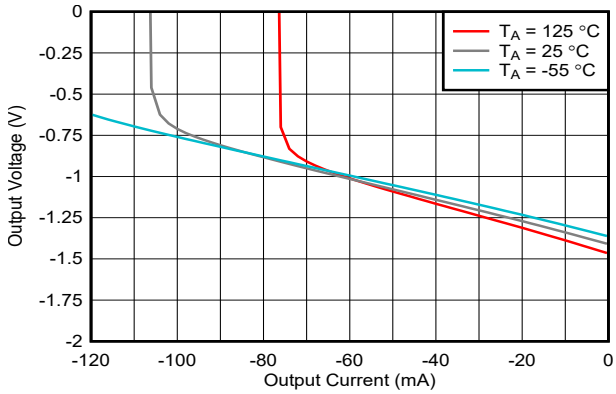

Figure 6-28. Output Swing vs Sinking Current

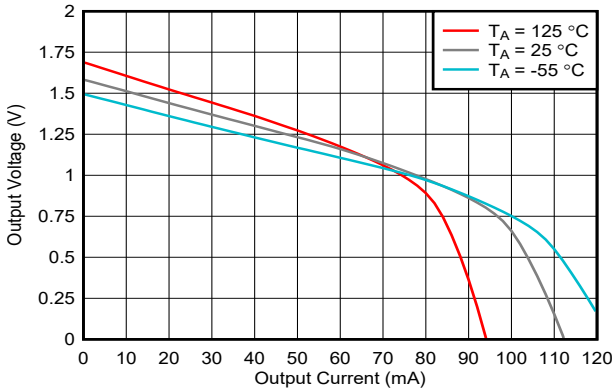

Figure 6-29. Output Swing vs Sourcing Current

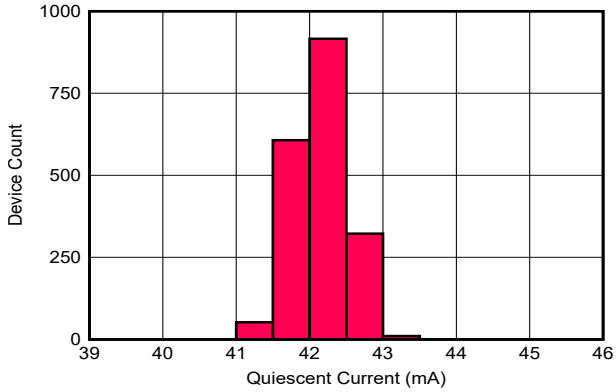

μ = 42.2 mA, σ = 0.251 mA

Figure 6-30. Quiescent Current (Both Channels) Distribution

Copyright © 2021 Texas Instruments Incorporated

6.7 Typical Characteristics (continued)

V_{S+} = +2.5 V, V_{S-}= -2.5 V, R_L = 200 Ω, C_{IN} = 4 pF, output load is referenced to mid-supply, input common-mode biased at mid-supply, and T_A ≈ +25°C (unless otherwise noted)

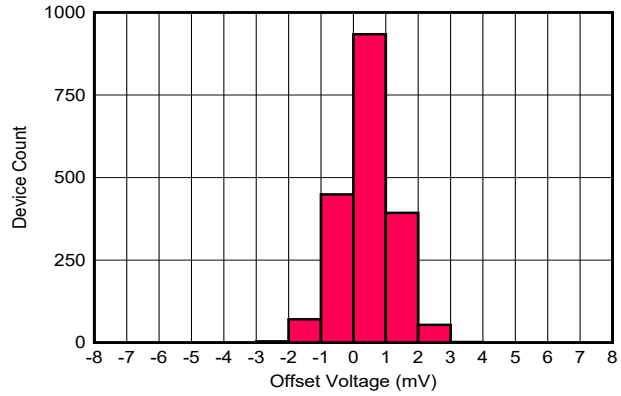

μ = 0.450 mV, σ = 0.845 mV

Figure 6-31. Offset Voltage Distribution − Channel A

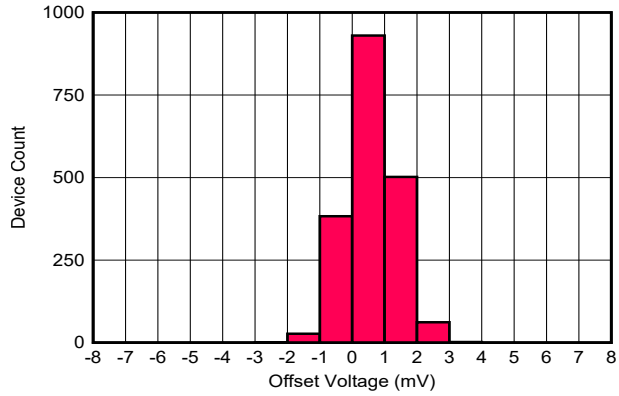

μ = 0.606 mV, σ = 0.754 mV

Figure 6-32. Offset Voltage Distribution − Channel B

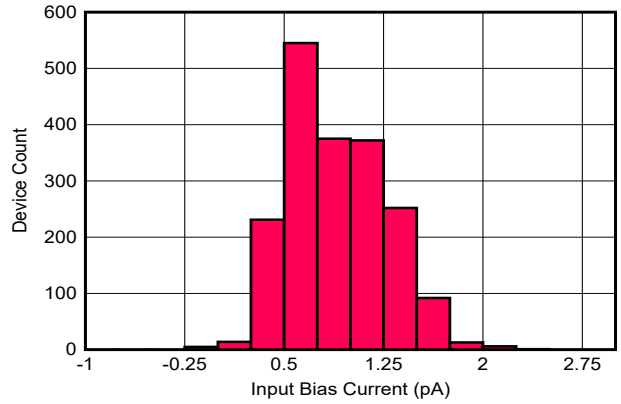

μ = 0.896 pA, σ = 0.383 pA

Figure 6-33. Input Bias Current Distribution − Channel A

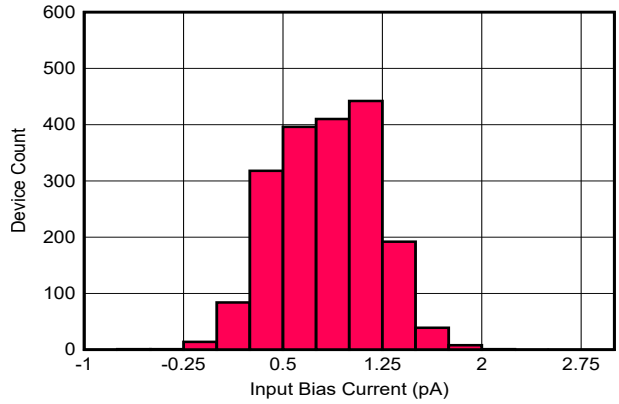

μ = 0.825 pA, σ = 0.386 pA

Figure 6-34. Input Bias Current Distribution − Channel B

7 Parameter Measurement Information

The test setup configuration for OPA3S2859-EP is shown below.

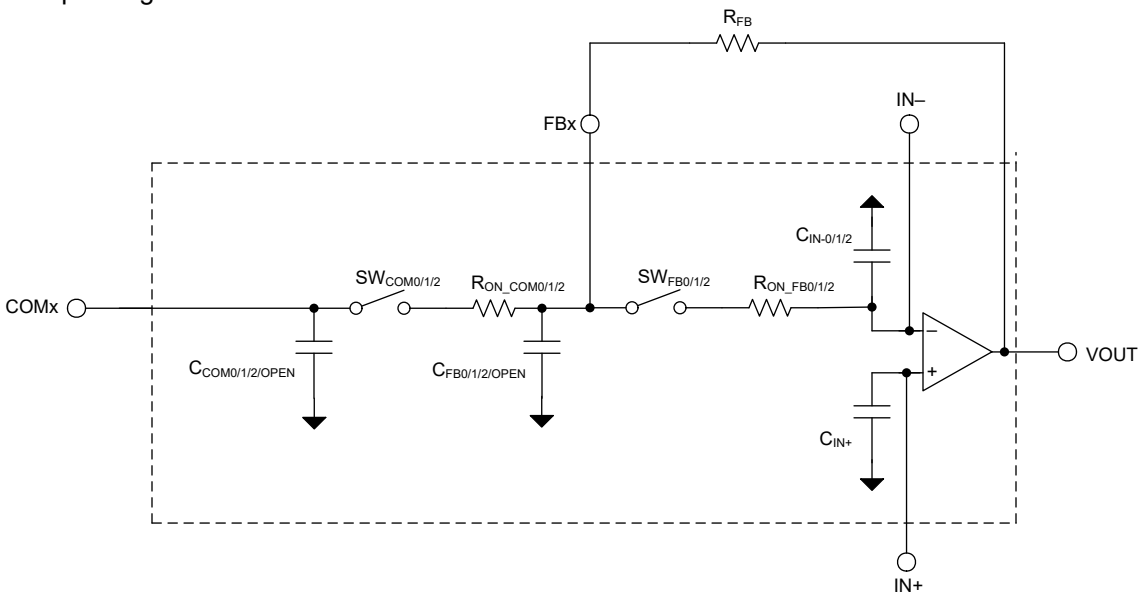

Figure 7-1. Switching Characteristics Configuration

Copyright © 2021 Texas Instruments Incorporated

8 Detailed Description

8.1 Overview

The OPA3S2859-EP features dual channel, high-speed, low noise, wide gain bandwidth amplifier with programmable gain switches to offer a compact, easy-to-use device for wideband transimpedance applications, high-speed data acquisition systems, and applications with weak signal inputs that require low-noise and high-gain front ends. Integrated switches allow for multiple gain settings on a single amplifier stage without the need for an additional multiplexer, therefore minimizing board parasitics.

The OPA3S2859-EP is offered in a 4-mm × 4-mm, 24-pin WQFN package that features multiple feedback (FB) pins for different gain options to make simple feedback network connection between the amplifier output and inverting input. The three internally switched feedback paths along with an additional parallel non-switched feedback path allows for up to four selectable gain configurations.

8.2 Functional Block Diagram

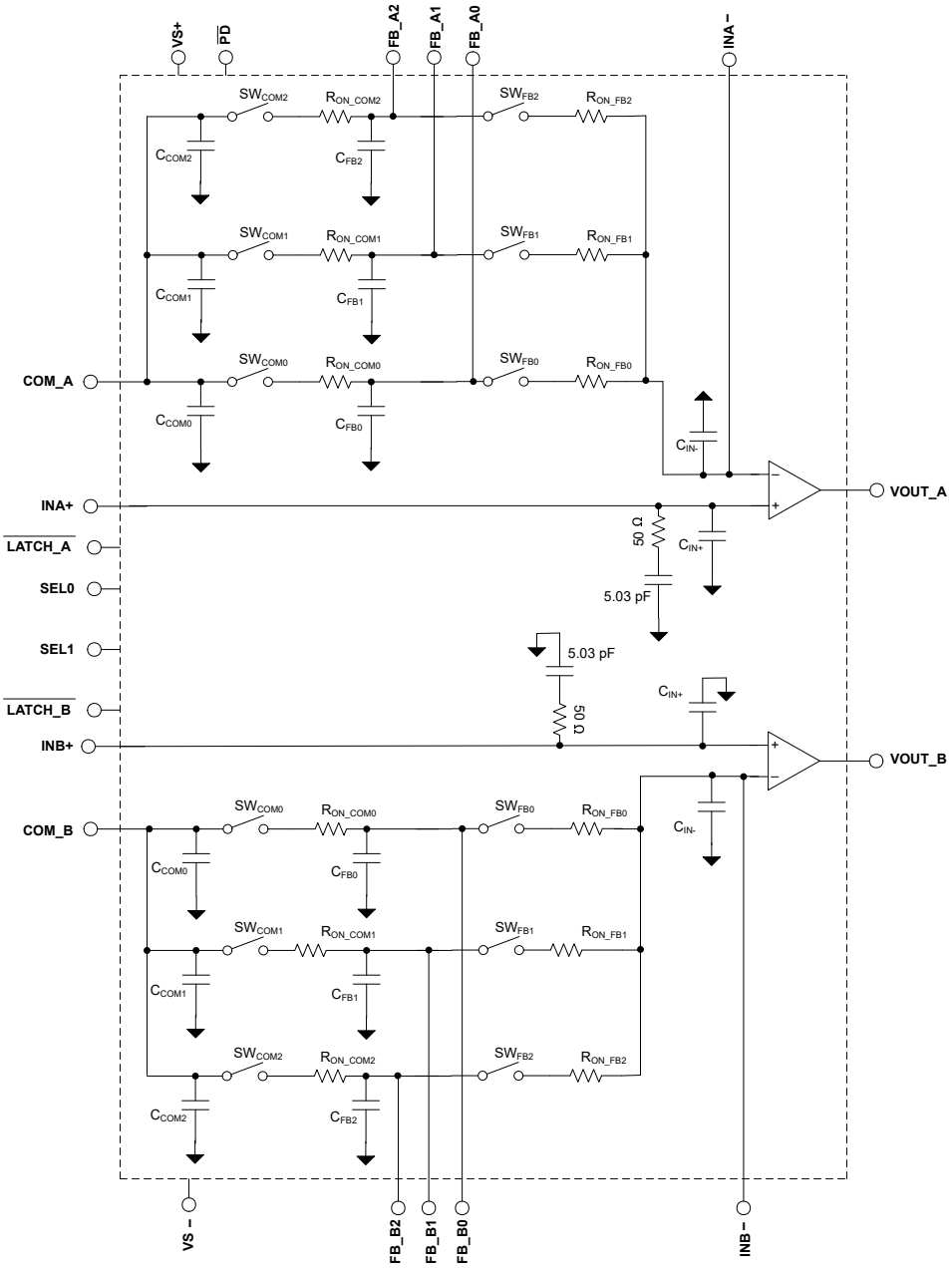

8.3 Feature Description

8.3.1 Programmable Gain

The OPA3S2859-EP features integrated switches that can be used for implementing different gain configurations. The closed-loop bandwidth and noise of a TIA are affected by the transimpedance gain and photodiode capacitance. The OPA3S2859-EP has a higher bandwidth in its low-gain configuration for a given value of photodiode capacitance compared to the high-gain configuration. Increasing the gain of the TIA stage by a factor of *X* increases the output signal by a factor *X*, but the noise contribution from the resistor only increases by √X. The input-referred noise density of the low-gain configuration is therefore higher than the input-referred noise density of the high-gain configuration.

OPA3S2859-EP provides control for switching among three independently-configured external feedback networks using FB_x0, FB_x1, FB_x2 pins, and allows for up to four selectable gain configurations with an additional parallel non-switched feedback path. The internal switches minimize parasitic contributions to increase performance compared to external methods. Each switch is optimized for increasing feedback resistor values ranging from < 1 kΩ to > 100 kΩ for wide dynamic range applications. The selected switch path is controlled for both channels using a 2-wire parallel interface (SEL0 and SEL1).

In many systems it is typical that gain will switch sequentially (also known as adjacent gain switching). For example, the gain will switch low to medium to high or high to medium to low. When switching between adjacent gains, the switches feature make-before-break switching, when programmed to a different switch connection, the previous switch does not change to high impedance state until the new switch is closed, with a typical 80 ns to 230 ns delay when both switches are closed. This feature helps the amplifier from not operating in an open-loop state when the switches are used in a switched-gain transimpedance configuration.

8.3.2 Slew Rate

The OPA3S2859-EP features a high slew rate of 350 V/µs. The slew rate is a critical parameter in high-speed pulse applications such as optical time-domain reflectometry (OTDR). The high slew rate implies that the device accurately reproduces a 2-V, sub 100-ns pulse edge, as seen in Figure 6-11. The wide bandwidth and slew rate of the device make it an excellent amplifier for high-speed signal-chain front ends.

8.3.3 Input and ESD Protection

The OPA3S2859-EP is fabricated on a low-voltage, high-speed, BiCMOS process. The internal, junction breakdown voltages are low for these small geometry devices, and as a result, all device pins are protected with internal ESD protection diodes to the power supplies. There are two antiparallel diodes between the inputs of the amplifier that clamp the inputs during an overrange or fault condition.

8.4 Device Functional Modes

8.4.1 Split-Supply and Single-Supply Operation

The OPA3S2859-EP can be configured with single-sided supplies or split-supplies without degrading performance. In either case, the thermal pad should be tied to the same voltage as V_{S-}.

8.4.2 Power-Down Mode

The OPA3S2859-EP features a power-down mode to conserve power. Connecting the $\overline{PD}$ pin low disables the amplifier thereby reducing the quiescent current and places the output in a high-impedance state.

$\overline{PD}$ pin has an internal pull up resistor, if the pin is left floating then the device defaults to an ON state. The $\overline{PD}$ disable and enable threshold voltages are with reference to the positive supply, as shown in the *Electrical Characteristics* section. If the amplifier is configured with the positive supply at 5 V and the negative supply at ground, then the disable and enable threshold voltages are 3.5 V and 4.2 V, respectively. If the amplifier is configured with ±2.5 V supplies, then the threshold voltages are at 1 V and 1.7 V.

Copyright © 2021 Texas Instruments Incorporated

8.4.3 Gain Select Mode (SEL)

The OPA3S2859-EP features two pins SEL0 and SEL1 to choose between three different internal switch networks and an external option. The SELx disable and enable threshold voltages are with reference to the positive supply as shown in the *Switching Characteristics* table. Note: while the SELx logic will select the same switch configuration for channel A and B, the external components (feedback network) of channels A and B do not have to be exactly the same.

When switching between different gain settings (feedback networks), the device has a transition time of only 80 ns to 230 ns (typical) as shown in the *Switching Characteristics* table. In many systems, it is typical that gain will be stepped sequentially (for example, low to medium to high or high to medium to low). The SELx logic assignment ensures that switching gains up or down involve only one input-pin transition, reducing the probability of unintended false codes during logic settling, as shown in Table 5-2.

8.4.4 Latch Mode

OPA3S2859-EP features $\overline{\text{LTCH_A}}$ and $\overline{\text{LTCH_B}}$ pins which independently latch the gain configuration for Channel A and Channel B, respectively. If the latch control inputs are connected to logic high or floating, then the chosen feedback selection (through the SEL0 and SEL1 pins) applies to A and B analog channels immediately, this is also called transparent mode. If the latch control inputs are logic low, then changing the feedback selection (through the SEL0 and SEL1 pins) does not affect the gain configuration of the respective amplifier channel. Figure 8-1 shows minimum timing requirements that should be met when using $\overline{\text{LTCH_x}}$ pins to latch gain configuration.

By using the latch control input for each channel, the feedback selection can be controlled separately from the common SEL1 and SEL0 pins, see an example below. The latch control inputs can also provide benefits in some cases where channel A and B need to have the same configuration. For example, in transparent mode, when switching between different gain settings any timing skew from SEL1 and SEL0 may result in unintended switch logic configurations for a short-duration resulting in transient output glitch. These intermediate glitch states can be minimized by holding the $\overline{\text{LTCH_x}}$ pin low until the new selection value at SEL pins has settled.

This feature is also useful in larger systems with multiple OPA3S2859-EP devices, the gain path can be set using common SEL0 and SEL1 signals for all the devices and latch pins can be used to control the gain independently for each amplifier channel.

Example configuration, to update the gain settings for Channel A only, follow these steps:

1. Set $\overline{\text{LTCH_B}}$ to logic low (latch mode), this way changes made on Channel A do not affect Channel B gain configuration.

2. If $\overline{\text{LTCH_A}}$ is high (transparent mode), use SEL0 and SEL1 pins to select the feedback network of interest. If $\overline{\text{LTCH_A}}$ is low, toggle it to logic high and use SEL0 and SEL1 pins to select the feedback network of interest.

3. To hold the selected gain, set $\overline{\text{LTCH_A}}$ to logic low. Ensure minimum setup time requirements (100 ns) are met between SELx selection to $\overline{\text{LTCH_A}}$ going low. Also, ensure that during the hold time (100 ns), no changes should be made on SELx pins. The minimum timing is based on internal device configuration, if needed, additional time must be added due to board layout parasitics and signal delays.

4. Gain setting for channel A is now latched and any changes on SELx pins will not change the gain configuration for channel A.

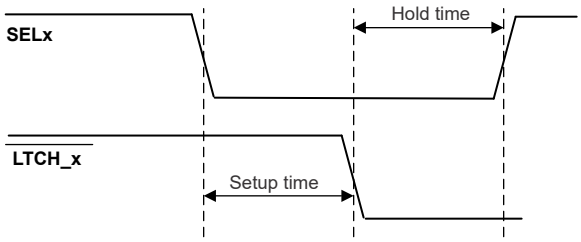

Figure 8-1. Timing Diagram

9 Application and Implementation

Note

Information in the following applications sections is not part of the TI component specification, and TI does not warrant its accuracy or completeness. TI's customers are responsible for determining suitability of components for their purposes, as well as validating and testing their design implementation to confirm system functionality.

9.1 Application Information

The OPA3S2859-EP offers a unique combination of dual channel, wide bandwidth low noise amplifiers with integrated programmable gain switches. This combination makes this amplifier an excellent choice for photodiode transimpedance amplifier applications with variable gain needs.

9.2 Typical Application

Figure 9-1 shows the circuit used to measure transimpedance bandwidth of the OPA3S2859-EP with different feedback network setting options. This configuration imitates the impedance of the photodiode on the input of the TIA.

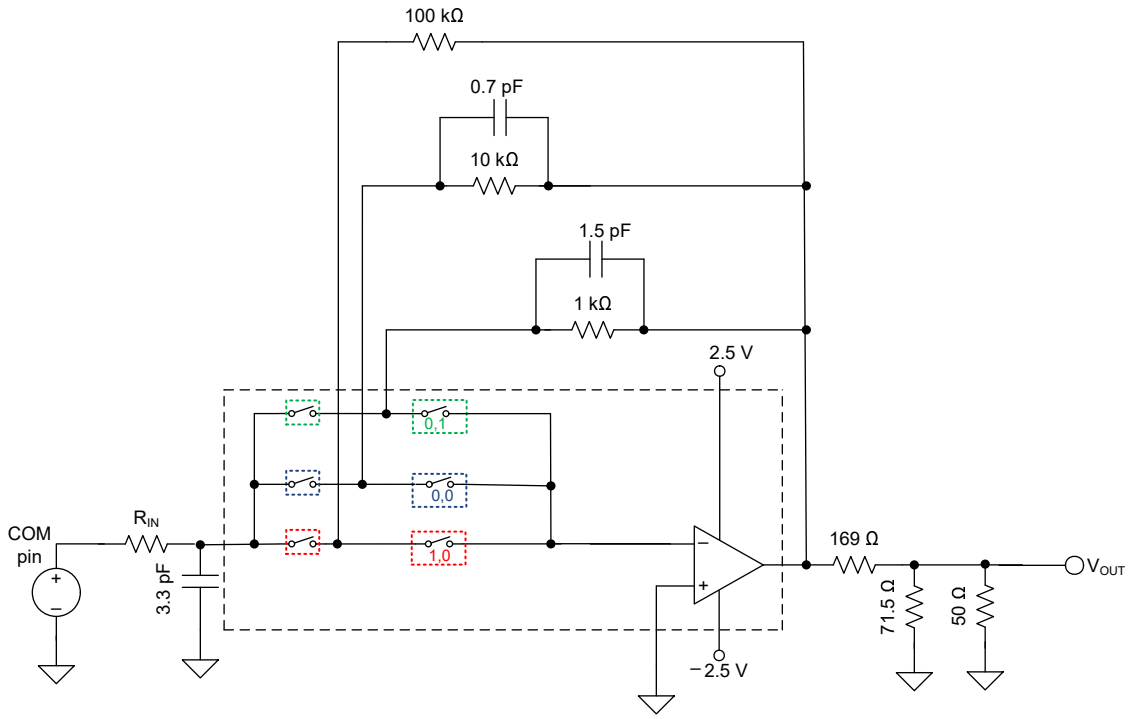

Figure 9-1. OPA3S2859-EP Test Circuit

9.2.1 Design Requirements

The objective is to design a variable gain, low noise, wideband optical front-end transimpedance amplifier. The design requirements are:

- Amplifier supply voltage: ± 2.5 V
- Transimpedance gain: 1 kΩ, 10 kΩ, 100 kΩ
- Photodiode capacitance: C_{APD} = 3.3 pF (additional estimated PCB capacitance = 0.7 pF)
- Target bandwidth: 130 MHz, 40 MHz, 14 MHz

Copyright © 2021 Texas Instruments Incorporated

9.2.2 Detailed Design Procedure

The OPA3S2859-EP meets the growing demand for wideband, low-noise photodiode amplifiers. The closed-loop bandwidth of a transimpedance amplifier is a function of the following:

1. The total input capacitance (C_{IN}). This total includes the photodiode capacitance, the input capacitance of the amplifier (common-mode and differential capacitance) and any stray capacitance from the PCB.
2. The op amp gain bandwidth product (GBWP).
3. The transimpedance gain (R_F).

Figure 9-1 shows the OPA3S2859-EP configured as programmable gain TIA using different feedback paths through the switch network. The feedback resistance (R_F) and the input capacitance (C_{IN}) form a zero in the noise gain that results in instability if left unchecked. To counteract the effect of the zero, a pole is inserted into the noise gain transfer function by adding the feedback capacitor (C_F). The *Transimpedance Considerations for High-Speed Amplifiers Application Report* discusses theories and equations that show how to compensate a transimpedance amplifier for a particular transimpedance gain and input capacitance. The bandwidth and compensation equations from the application report are available in an Excel® calculator. *What You Need To Know About Transimpedance Amplifiers – Part 1* provides a link to the calculator.

The equations and calculators in the referenced application report and blog posts are used to model the bandwidth (f_{-3dB}) and noise performance of the OPA3S2859-EP configured as a TIA. For this setup, to emulate an ideal current source, choose R_{IN} value to be 1 to 10x greater than R_F such that the low frequency noise gain closer to 1 V/V to 2 V/V (R_F = 1 kΩ, 10 kΩ, 100 kΩ, R_{IN} = 10 kΩ, 100 kΩ, 100 kΩ; respectively). The resultant performance is shown in Figure 9-2. To maximize bandwidth, make sure to reduce any stray parasitic capacitance from the PCB. Increasing R_F results in lower bandwidth. To maximize the signal-to-noise ratio (SNR) in an optical front-end system, maximize the gain in the TIA stage.

9.2.3 Application Curves

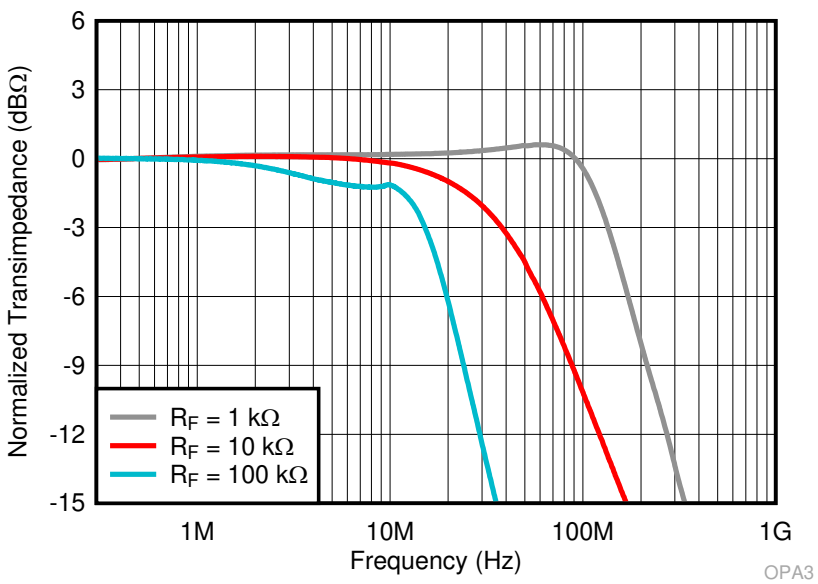

Figure 9-2. Bandwidth vs Frequency

10 Power Supply Recommendations

The OPA3S2859-EP operates on supplies from 3.3 V to 5.25 V. The device operates on single-sided supplies, split and balanced bipolar supplies, and unbalanced bipolar supplies. Because the OPA3S2859-EP does not feature rail-to-rail inputs or outputs, the input common-mode and output swing ranges are limited at 3.3-V supplies.

11 Layout

11.1 Layout Guidelines

Achieving optimum performance with a high-frequency amplifier, such as the OPA3S2859-EP, requires careful attention to board layout parasitics and external component types. Recommendations that optimize performance include the following:

- **Reduce capacitive coupling between feedback traces.** Trace-to-trace capacitance between the three feedback connection traces can cause the traces to couple together at high frequency and effect the gain of the device. Particularly for high gain feedback configurations, capacitive coupling to feedback paths with lower gain can significantly reduce the bandwidth if not properly isolated. For example, in a circuit configuration with 100k, 10k, and 1k feedback elements, the 100k gain path can see over 66% reduction in bandwidth when using an non-optimized feedback layout. To properly isolate the feedback traces it is important to space the traces out and pour ground plane between the traces to isolate their capcitance; additional trace length, however, does add further inductance and capacitance to the traces which can also effect performance. Therefore, it is important to balance the feedback area and trace length to best minimize the major parasitic effect. A good starting point is to use a design similar to the evaluation module with a feedback area of approximately 6 mm × 6 mm. This can then be adjusted depending on circuit limitations and needs.
- **Minimize parasitic capacitance from the signal I/O pins to ac ground.** Parasitic capacitance on the output pins can cause instability where as parasitic capacitance on the input pin reduces the amplifier bandwidth. To reduce unwanted capacitance, cut out the power and ground traces under the signal input pins, output pins, and exterior feedback trace when possible. A small value isolation resistor between the DUT output and feedback network can also help reduce the parasitic loading caused by the feedback trace on the output. Otherwise, ground and power planes must be unbroken elsewhere on the board.
- **Minimize the distance from the power-supply pins to the high-frequency bypass capacitors.** Use high-quality, 100-pF to 0.1-µF, C0G and NPO-type decoupling capacitors with voltage ratings at least three times greater than the amplifiers maximum power supplies. Place the smallest value capacitors on the same side as the DUT. If space constraints force the larger value bypass capacitors to be placed on the opposite side of the PCB, use multiple vias on the supply and ground side of the capacitors. This configuration makes sure that there is a low-impedance path to the amplifiers power-supply pins across the amplifiers gain bandwidth specification. Avoid narrow power and ground traces to minimize inductance between the pins and the decoupling capacitors. Larger (2.2-µF to 6.8-µF) decoupling capacitors that are effective at lower frequency must be used on the supply pins. Place these decoupling capacitors further from the device. Share the decoupling capacitors among several devices in the same area of the printed circuit board (PCB).

11.2 Layout Examples

Figure 11-1 shows a typical layout around the OPA3S2859-EP based on the evaluation module. The smallest decoupling capacitors were placed as close as possible to the DUT with wide metal area to minimize inductance. Special attention was placed on the feedback network layout to optimize the design for a typical application using 1 kΩ, 10 kΩ, and 100 kΩ feedback resistors. Please see Figure 11-2 for more details. The black colored areas under the input and feedback traces show the voids cut in the ground plane underneath the traces to minimize capacitance to ground as much as possible.

Copyright © 2021 Texas Instruments Incorporated

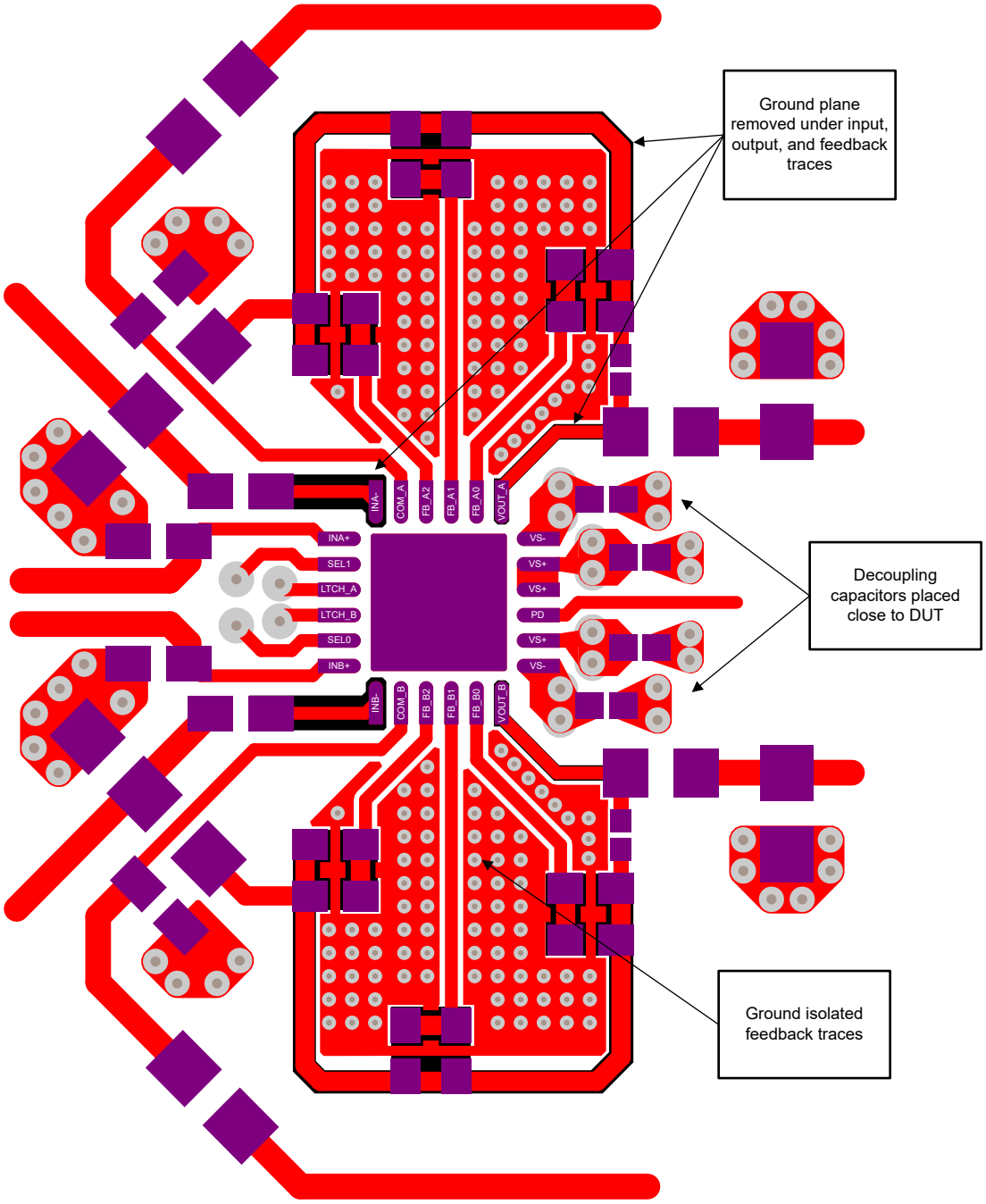

Figure 11-1. General Layout Example

Figure 11-2 shows an example of a feedback network from the evaluation module optimized to reduce the capacitive coupling between the feedback and output traces. Ground plane is poured between each of the feedback traces and component footprints as much as possible for the best isolation. A small isoation resistor (RISO) in connected between the output and feedback trace to help isolate the trace capacitance from being directly connected to the DUT output. Additionally, the ground plane is removed from under the feedback trace to further reduce the parasitic capacitance to ground created by the additional trace length required for the feedback network.

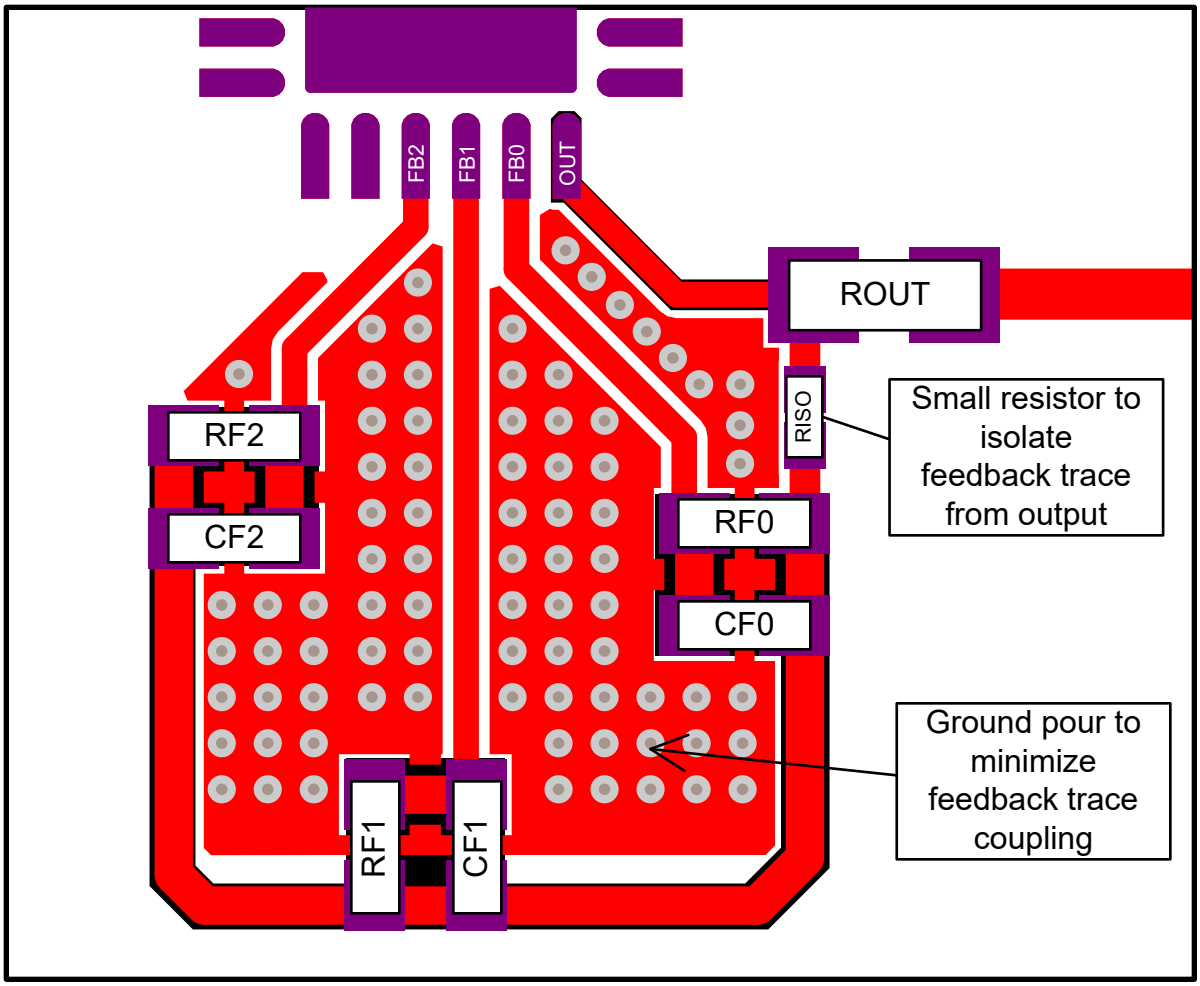

Figure 11-2. Feedback Network Layout Recommendations

Copyright © 2021 Texas Instruments Incorporated

12 Device and Documentation Support

12.1 Device Support

12.1.1 Development Support

- Texas Instruments, *Optical Front-End System Reference Design* design guide
- Texas Instruments, *LIDAR-Pulsed Time-of-Flight Reference Design Using High-Speed Data Converters* design guide
- Texas Instruments, *LIDAR Pulsed Time of Flight Reference Design* design guide

12.2 Documentation Support

12.2.1 Related Documentation

See the following for related documentation:

- Texas Instruments, *OPA3S2859-EP Evaluation Module* user's guide
- Texas Instruments, *Transimpedance Considerations for High-Speed Amplifiers* application report
- Texas Instruments, *What You Need To Know About Transimpedance Amplifiers – Part 1* blog
- Texas Instruments, *What You Need To Know About Transimpedance Amplifiers – Part 2* blog
- Texas Instruments, *Training Video: How to Design Transimpedance Amplifier Circuits*
- Texas Instruments, *Training Video: High-Speed Transimpedance Amplifier Design Flow*
- Texas Instruments, *Training Video: How to Convert a TINA-TI Model into a Generic SPICE Model*

12.3 Receiving Notification of Documentation Updates

To receive notification of documentation updates, navigate to the device product folder on ti.com. Click on *Subscribe to updates* to register and receive a weekly digest of any product information that has changed. For change details, review the revision history included in any revised document.

12.4 Support Resources

TI E2E™ support forums are an engineer's go-to source for fast, verified answers and design help — straight from the experts. Search existing answers or ask your own question to get the quick design help you need.

Linked content is provided "AS IS" by the respective contributors. They do not constitute TI specifications and do not necessarily reflect TI's views; see TI's Terms of Use.

12.5 Trademarks

TI E2E™ is a trademark of Texas Instruments.
Excel® is a registered trademark of Microsoft Corporation.
All trademarks are the property of their respective owners.

12.6 Electrostatic Discharge Caution

This integrated circuit can be damaged by ESD. Texas Instruments recommends that all integrated circuits be handled with appropriate precautions. Failure to observe proper handling and installation procedures can cause damage.

ESD damage can range from subtle performance degradation to complete device failure. Precision integrated circuits may be more susceptible to damage because very small parametric changes could cause the device not to meet its published specifications.

12.7 Glossary

TI Glossary — This glossary lists and explains terms, acronyms, and definitions.

13 Mechanical, Packaging, and Orderable Information

The following pages include mechanical, packaging, and orderable information. This information is the most current data available for the designated devices. This data is subject to change without notice and revision of this document. For browser-based versions of this data sheet, refer to the left-hand navigation.

PACKAGING INFORMATION

Orderable part number	Status (1)	Material type (2)	Package | Pins	Package qty | Carrier	RoHS (3)	Lead finish/ Ball material (4)	MSL rating/ Peak reflow (5)	Op temp (°C)	Part marking (6)
OPA3S2859MRTWREP	Active	Production	WQFN (RTW) | 24	3000 | LARGE T&R	Yes	NIPDAU	Level-2-260C-1 YEAR	-55 to 125	3S2859
V62/22603-01XE	Active	Production	WQFN (RTW) | 24	3000 | LARGE T&R	Yes	NIPDAU	Level-2-260C-1 YEAR	-55 to 125	3S2859

(1) **Status:** For more details on status, see our product life cycle.

(2) **Material type:** When designated, preproduction parts are prototypes/experimental devices, and are not yet approved or released for full production. Testing and final process, including without limitation quality assurance, reliability performance testing, and/or process qualification, may not yet be complete, and this item is subject to further changes or possible discontinuation. If available for ordering, purchases will be subject to an additional waiver at checkout, and are intended for early internal evaluation purposes only. These items are sold without warranties of any kind.

(3) **RoHS values:** Yes, No, RoHS Exempt. See the TI RoHS Statement for additional information and value definition.

(4) **Lead finish/Ball material:** Parts may have multiple material finish options. Finish options are separated by a vertical ruled line. Lead finish/Ball material values may wrap to two lines if the finish value exceeds the maximum column width.

(5) **MSL rating/Peak reflow:** The moisture sensitivity level ratings and peak solder (reflow) temperatures. In the event that a part has multiple moisture sensitivity ratings, only the lowest level per JEDEC standards is shown. Refer to the shipping label for the actual reflow temperature that will be used to mount the part to the printed circuit board.

(6) **Part marking:** There may be an additional marking, which relates to the logo, the lot trace code information, or the environmental category of the part.

Multiple part markings will be inside parentheses. Only one part marking contained in parentheses and separated by a "~" will appear on a part. If a line is indented then it is a continuation of the previous line and the two combined represent the entire part marking for that device.

Important Information and Disclaimer: The information provided on this page represents TI's knowledge and belief as of the date that it is provided. TI bases its knowledge and belief on information provided by third parties, and makes no representation or warranty as to the accuracy of such information. Efforts are underway to better integrate information from third parties. TI has taken and continues to take reasonable steps to provide representative and accurate information but may not have conducted destructive testing or chemical analysis on incoming materials and chemicals. TI and TI suppliers consider certain information to be proprietary, and thus CAS numbers and other limited information may not be available for release.

In no event shall TI's liability arising out of such information exceed the total purchase price of the TI part(s) at issue in this document sold by TI to Customer on an annual basis.

OTHER QUALIFIED VERSIONS OF OPA3S2859-EP :

- Catalog : OPA3S2859

NOTE: Qualified Version Definitions:

- Catalog - TI's standard catalog product

TAPE AND REEL INFORMATION

REEL DIMENSIONS

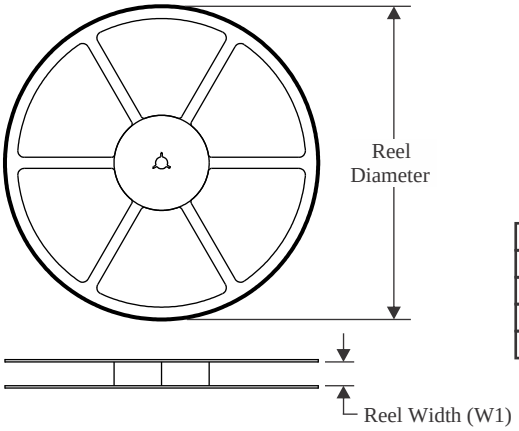

TAPE DIMENSIONS

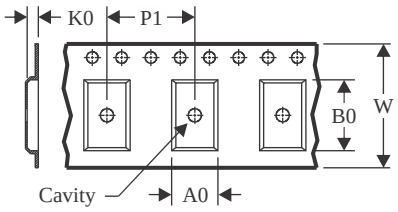

A0	Dimension designed to accommodate the component width
B0	Dimension designed to accommodate the component length
K0	Dimension designed to accommodate the component thickness
W	Overall width of the carrier tape
P1	Pitch between successive cavity centers

QUADRANT ASSIGNMENTS FOR PIN 1 ORIENTATION IN TAPE

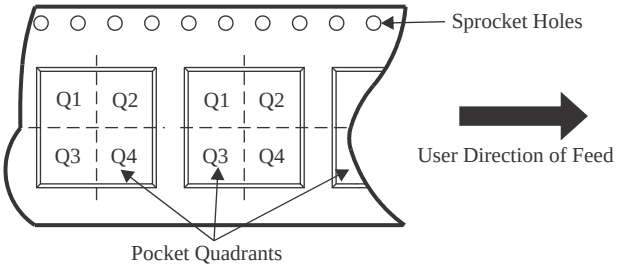

*All dimensions are nominal

Device	Package Type	Package Drawing	Pins	SPQ	Reel Diameter (mm)	Reel Width W1 (mm)	A0 (mm)	B0 (mm)	K0 (mm)	P1 (mm)	W (mm)	Pin1 Quadrant
OPA3S2859MRTWREP	WQFN	RTW	24	3000	330.0	12.4	4.25	4.25	1.15	8.0	12.0	Q2

TAPE AND REEL BOX DIMENSIONS

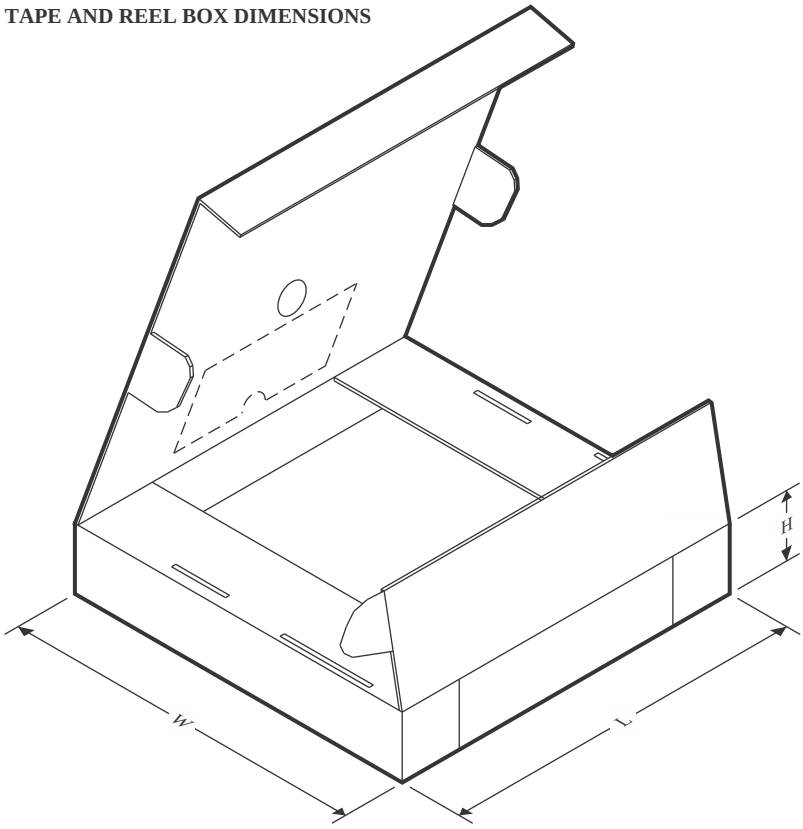

*All dimensions are nominal

Device	Package Type	Package Drawing	Pins	SPQ	Length (mm)	Width (mm)	Height (mm)
OPA3S2859MRTWREP	WQFN	RTW	24	3000	346.0	346.0	33.0

GENERIC PACKAGE VIEW

RTW 24

WQFN - 0.8 mm max height

4 x 4, 0.5 mm pitch

PLASTIC QUAD FLATPACK - NO LEAD

This image is a representation of the package family, actual package may vary.
Refer to the product data sheet for package details.

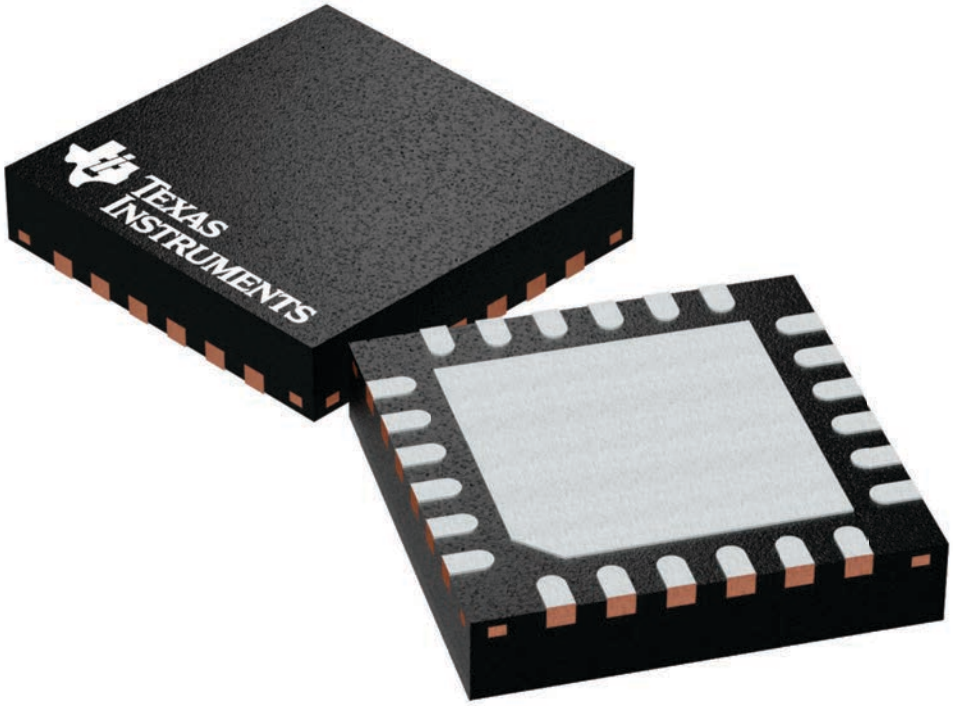

4224801/A

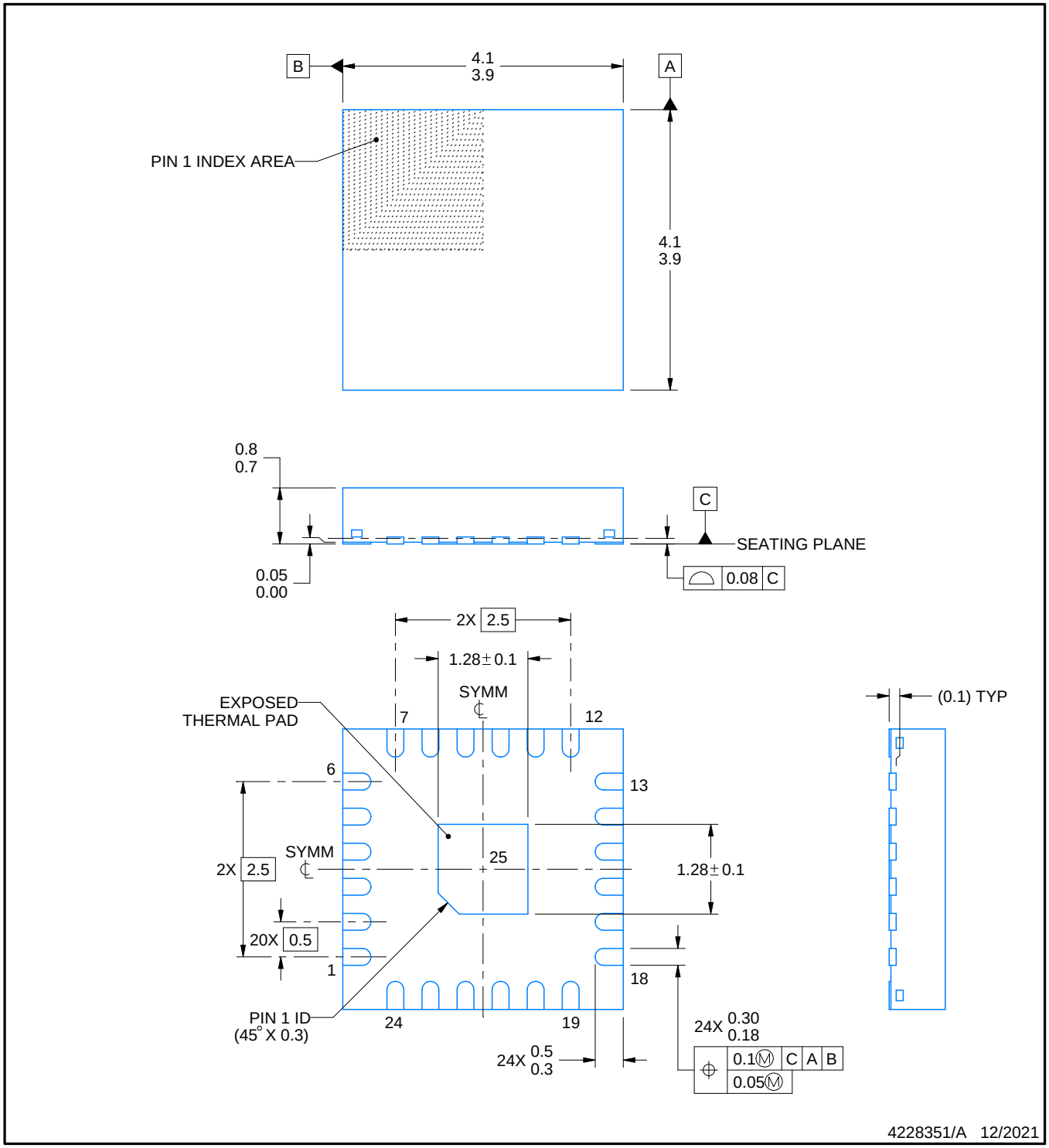

NOTES:

1. All linear dimensions are in millimeters. Any dimensions in parenthesis are for reference only. Dimensioning and tolerancing per ASME Y14.5M.
2. This drawing is subject to change without notice.
3. The package thermal pad must be soldered to the printed circuit board for thermal and mechanical performance.

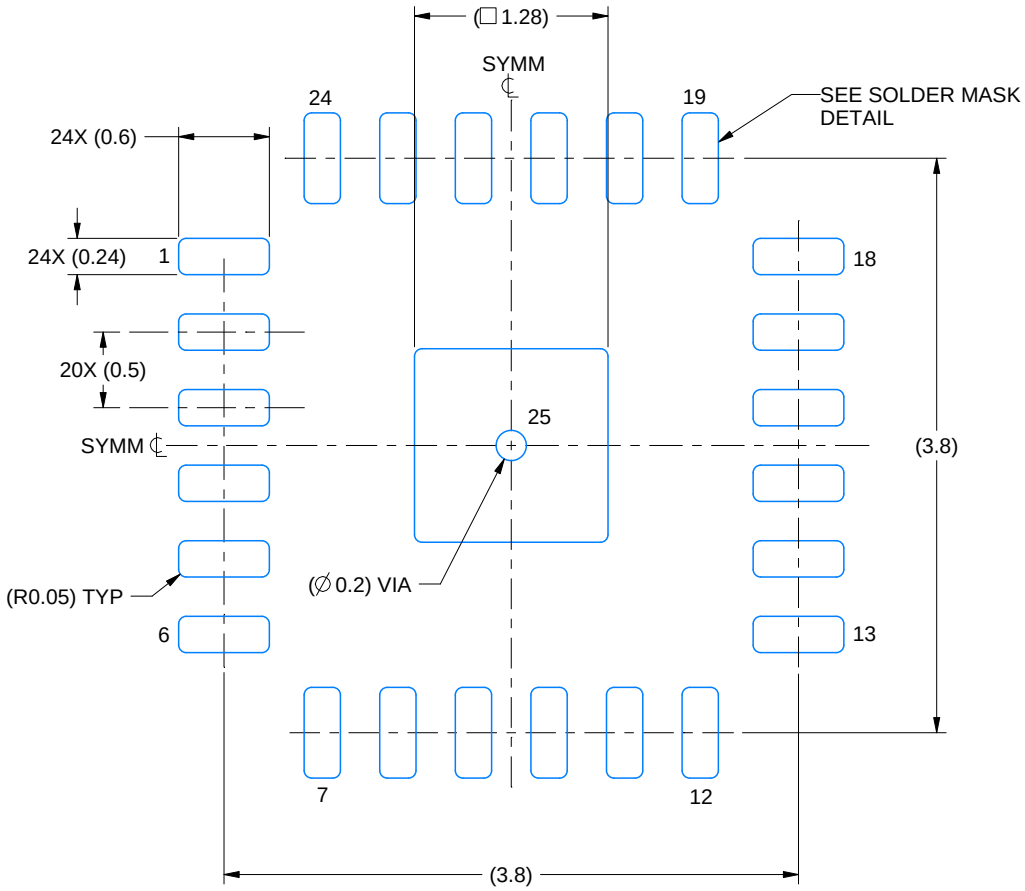

LAND PATTERN EXAMPLE
EXPOSED METAL SHOWN
SCALE: 20X

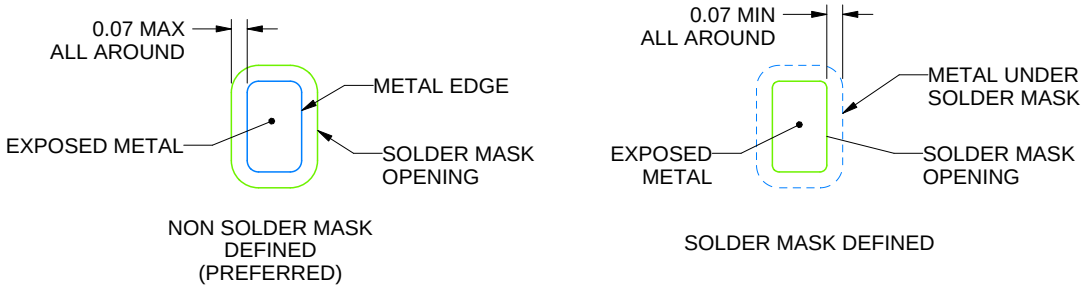

SOLDER MASK DETAILS

4228351/A 12/2021

NOTES: (continued)

4. This package is designed to be soldered to a thermal pad on the board. For more information, see Texas Instruments literature number SLUA271 (www.ti.com/lit/slua271).
5. Vias are optional depending on application, refer to device data sheet. If any vias are implemented, refer to their locations shown on this view. It is recommended that vias under paste be filled, plugged or tented.

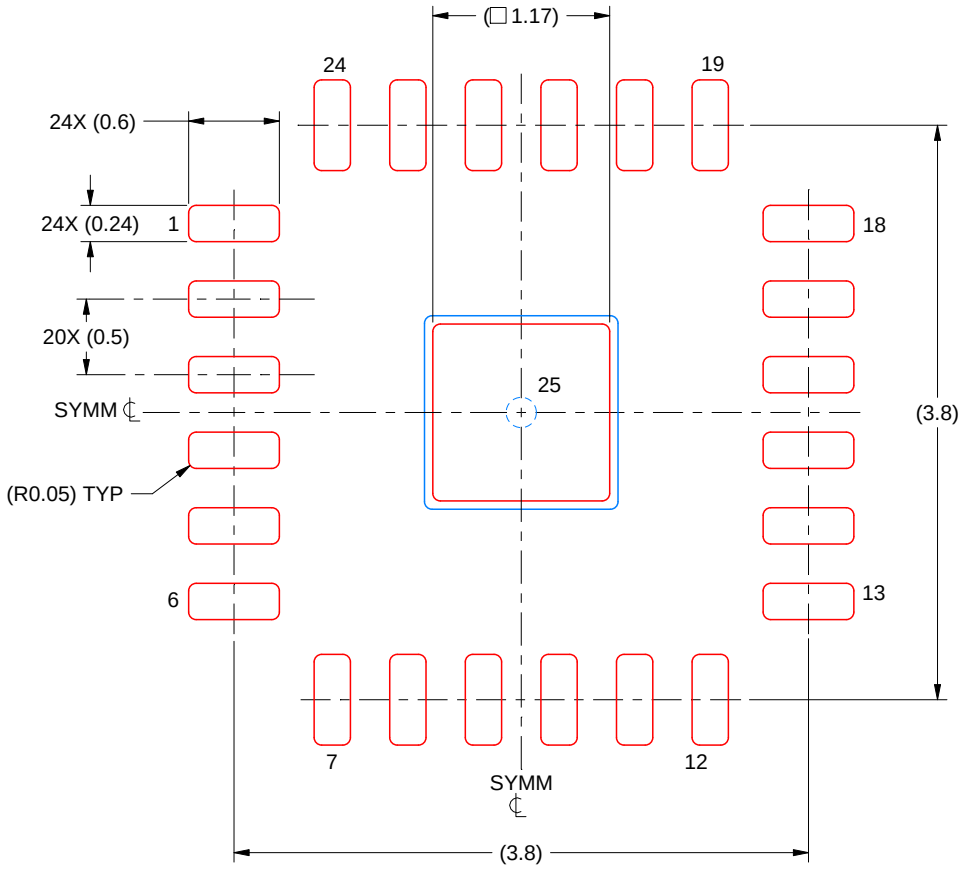

SOLDER PASTE EXAMPLE
BASED ON 0.125 MM THICK STENCIL
SCALE: 20X

EXPOSED PAD 25
84% PRINTED SOLDER COVERAGE BY AREA UNDER PACKAGE

4228351/A 12/2021

NOTES: (continued)

6. Laser cutting apertures with trapezoidal walls and rounded corners may offer better paste release. IPC-7525 may have alternate design recommendations.

IMPORTANT NOTICE AND DISCLAIMER

TI PROVIDES TECHNICAL AND RELIABILITY DATA (INCLUDING DATA SHEETS), DESIGN RESOURCES (INCLUDING REFERENCE DESIGNS), APPLICATION OR OTHER DESIGN ADVICE, WEB TOOLS, SAFETY INFORMATION, AND OTHER RESOURCES “AS IS” AND WITH ALL FAULTS, AND DISCLAIMS ALL WARRANTIES, EXPRESS AND IMPLIED, INCLUDING WITHOUT LIMITATION ANY IMPLIED WARRANTIES OF MERCHANTABILITY, FITNESS FOR A PARTICULAR PURPOSE OR NON-INFRINGEMENT OF THIRD PARTY INTELLECTUAL PROPERTY RIGHTS.

These resources are intended for skilled developers designing with TI products. You are solely responsible for (1) selecting the appropriate TI products for your application, (2) designing, validating and testing your application, and (3) ensuring your application meets applicable standards, and any other safety, security, regulatory or other requirements.

These resources are subject to change without notice. TI grants you permission to use these resources only for development of an application that uses the TI products described in the resource. Other reproduction and display of these resources is prohibited. No license is granted to any other TI intellectual property right or to any third party intellectual property right. TI disclaims responsibility for, and you will fully indemnify TI and its representatives against, any claims, damages, costs, losses, and liabilities arising out of your use of these resources.

TI’s products are provided subject to TI’s Terms of Sale or other applicable terms available either on ti.com or provided in conjunction with such TI products. TI’s provision of these resources does not expand or otherwise alter TI’s applicable warranties or warranty disclaimers for TI products.

TI objects to and rejects any additional or different terms you may have proposed.

Mailing Address: Texas Instruments, Post Office Box 655303, Dallas, Texas 75265
Copyright © 2025, Texas Instruments Incorporated