OPA300, OPA2300
OPA301, OPA2301

SBOS271D − MAY 2003 − REVISED JUNE 2007

Low-Noise, High-Speed, 16-Bit Accurate, CMOS OPERATIONAL AMPLIFIER

FEATURES

- **High Bandwidth: 150MHz**
- **16-Bit Settling in 150ns**
- **Low Noise: 3nV/√Hz**
- **Low Distortion: 0.003%**
- **Low Power: 9.5mA (typ) on 5.5V**
- **Shutdown to 5µA**
- **Unity-Gain Stable**
- **Excellent Output Swing:**
  (V+) − 100mV to (V−) + 100mV
- **Single Supply: +2.7V to +5.5V**
- **Tiny Packages: MSOP and SOT23**

APPLICATIONS

- **16-Bit ADC Input Drivers**
- **Low-Noise Preamplifiers**
- **IF/RF Amplifiers**
- **Active Filtering**

DESCRIPTION

The OPA300 and OPA301 series high-speed, voltage-feedback, CMOS operational amplifiers are designed for 16-bit resolution systems. The OPA300/OPA301 series are unity-gain stable and feature excellent settling and harmonic distortion specifications. Low power applications benefit from low quiescent current. The OPA300 and OPA2300 feature a digital shutdown (Enable) function to provide additional power savings during idle periods. Optimized for single-supply operation, the OPA300/OPA301 series offer superior output swing and excellent common-mode range.

The OPA300 and OPA301 series op amps have 150MHz of unity-gain bandwidth, low 3nV/√Hz voltage noise, and 0.1% settling within 30ns. Single-supply operation from 2.7V (±1.35V) to 5.5V (±2.75V) and an available shutdown function that reduces supply current to 5µA are useful for portable low-power applications. The OPA300 and OPA301 are available in SO-8 and SOT-23 packages. The OPA2300 is available in MSOP-10, and the OPA2301 is available in SO-8 and MSOP-8. All versions are specified over the industrial temperature range of −40°C to +125°C.

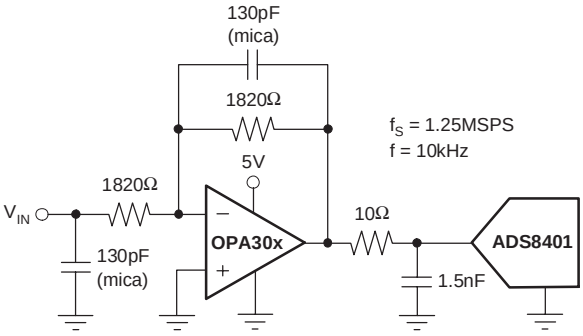

Typical Application

Please be aware that an important notice concerning availability, standard warranty, and use in critical applications of Texas Instruments semiconductor products and disclaimers thereto appears at the end of this data sheet.

All trademarks are the property of their respective owners.

PRODUCTION DATA information is current as of publication date. Products conform to specifications per the terms of Texas Instruments standard warranty. Production processing does not necessarily include testing of all parameters.

Copyright © 2003−2007, Texas Instruments Incorporated

PACKAGE/ORDERING INFORMATION(1)

PRODUCT	PACKAGE-LEAD	PACKAGE DESIGNATOR	PACKAGE MARKING
OPA300	SO-8	D	300A
OPA300	SOT23-6	DBV	A52
OPA301	SO-8	D	301A
OPA301	SOT23-5	DBV	AUP
OPA2300	MSOP−10	DGS	C01
OPA2301	SO−8	D	OPA2301A
OPA2301	MSOP−8	DGK	OAWM

(1) For the most current package and ordering information, see the Package Option Addendum at the end of this document, or see the TI website at www.ti.com.

ABSOLUTE MAXIMUM RATINGS

over operating free-air temperature range unless otherwise noted(1)

Power Supply V+	7V
Signal Input Terminals(2), Voltage	0.5V to (V+) + 0.5V
Current	±10mA
Open Short-Circuit Current(3)	Continuous
Operating Temperature Range	−55°C to +125°C
Storage Temperature Range	−60°C to +150°C
Junction Temperature	+150°C
ESD Ratings	
Human Body Model (HBM)	4kV
Charged-Device Model (CDM)	500V

(1) Stresses above these ratings may cause permanent damage. Exposure to absolute maximum conditions for extended periods may degrade device reliability. These are stress ratings only, and functional operation of the device at these or any other conditions beyond those specified is not implied.
(2) Input terminals are diode clamped to the power-supply rails. Input signals that can swing more than 0.5V beyond the supply rails should be current limited to 10mA or less.
(3) Short-circuit to ground; one amplifier per package.

ELECTROSTATIC DISCHARGE SENSITIVITY

This integrated circuit can be damaged by ESD. Texas Instruments recommends that all integrated circuits be handled with appropriate precautions. Failure to observe proper handling and installation procedures can cause damage.

ESD damage can range from subtle performance degradation to complete device failure. Precision integrated circuits may be more susceptible to damage because very small parametric changes could cause the device not to meet its published specifications.

PIN ASSIGNMENTS

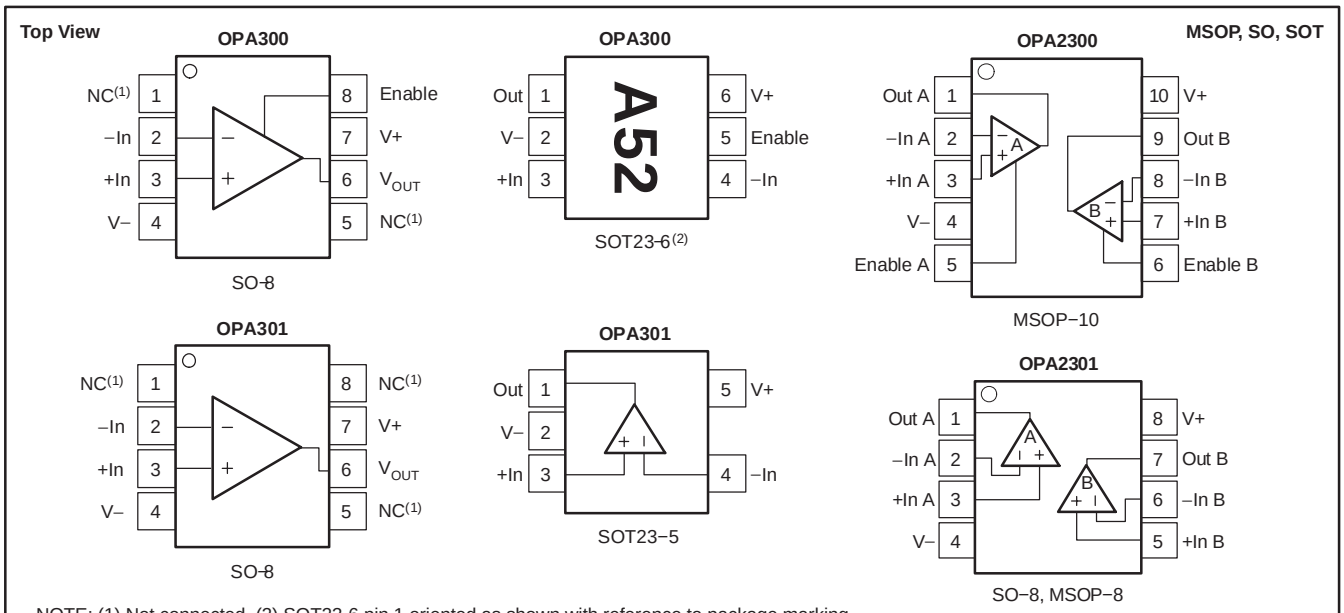

NOTE: (1) Not connected. (2) SOT23-6 pin 1 oriented as shown with reference to package marking.

ELECTRICAL CHARACTERISTICS: V_S = 2.7V to 5.5V

Boldface limits apply over the temperature range, **T_A = −40°C to +125°C**.

All specifications at T_A = +25°C, R_L = 2kΩ connected to V_S/2, V_{OUT} = V_S/2, and V_{CM} = V_S/2, unless otherwise noted.

PARAMETER		TEST CONDITIONS	OPA300, OPA301 OPA2300, OPA2301 MIN	TYP	MAX	UNITS
OFFSET VOLTAGE						
Input Offset Voltage	V_{OS}	V_S = 5V		1	5	mV
Over Temperature					**7**	**mV**
Drift	**dV_{OS}/dT**			**2.5**		**µV/°C**
vs. Power Supply	**PSRR**	**V_S = 2.7V to 5.5V, V_{CM} < (V+) −0.9V**		**50**	**200**	**µV/V**
Channel Separation, dc				140		dB
f = 5MHz				100		dB
INPUT VOLTAGE RANGE						
Common-Mode Voltage Range	V_{CM}		(V−) − 0.2		(V+) − 0.9	V
Common-Mode Rejection Ratio	**CMRR**	**(V−) − 0.2V < V_{CM} < (V+) − 0.9V**	**66**	**80**		**dB**
INPUT BIAS CURRENT						
Input Bias Current	I_B			±0.1	±5	pA
Input Offset Current	I_{OS}			±0.5	±5	pA
INPUT IMPEDANCE						
Differential				10^{13} || 3		Ω || pF
Common-Mode				10^{13} || 6		Ω || pF
NOISE						
Input Voltage Noise, f = 0.1Hz to 1MHz				40		$µV_{PP}$
Input Voltage Noise Density, f > 1MHz	e_n			3		nV/√Hz
Input Current Noise Density, f < 1kHz	i_n			1.5		fA/√Hz
Differential Gain Error		NTSC, R_L = 150Ω		0.01		%
Differential Phase Error		NTSC, R_L = 150Ω		0.1		°
OPEN-LOOP GAIN						
Open−Loop Voltage Gain	A_{OL}	V_S = 5V, R_L = 2kΩ, 0.1V < V_O < 4.9V	95	106		dB
Over Temperature		**V_S = 5V, R_L = 2kΩ, 0.1V < V_O < 4.9V**	**90**			**dB**
		V_S = 5V, R_L = 100Ω, 0.5V < V_O < 4.5V	95	106		dB
Over Temperature		**V_S = 5V, R_L = 100Ω, 0.5V < V_O < 4.5V**	**90**			**dB**
OUTPUT						
Voltage Output Swing from Rail		R_L = 2kΩ, A_{OL} > 95dB		75	100	mV
		R_L = 100Ω, A_{OL} > 95dB		300	500	mV
Short-Circuit Current	I_{SC}			70		mA
Open-Loop Output Impedance	R_O	I_O = 0, f = 1MHz		20		Ω
Capacitive Load Drive	C_{LOAD}		See Typical Characteristics			
FREQUENCY RESPONSE						
Gain-Bandwidth Product	GBW			150		MHz
Slew Rate	SR	G = +1		80		V/µs
Settling Time, 0.01%	t_S	V_S = 5V, 2V Step, G = +1		90		ns
0.1%				30		ns
Overload Recovery Time		Gain = −1		30		ns
Total Harmonic Distortion + Noise	THD+N	V_S = 5V, V_O = $3V_{PP}$, G = +1, f = 1kHz		0.003		%
POWER SUPPLY						
Specified Voltage Range	V_S		2.7		5.5	V
Operating Voltage Range				2.7 to 5.5		V
Quiescent Current (per amplifier)	I_Q	I_O = 0		9.5	12	mA
Over Temperature					**13**	**mA**
SHUTDOWN						
t_{OFF}				40		ns
t_{ON}				5		µs
V_L (shutdown)			(V−) − 0.2		(V−) + 0.8	V
V_H (amplifier is active)			(V−) + 2.5		(V+) + 0.2	V
I_{QSD} (per amplifier)				3	10	µA
TEMPERATURE RANGE						
Specified Range			−40		+125	°C
Operating Range			−55		+125	°C
Storage Range			−60		+150	°C
Thermal Resistance	$θ_{JA}$					°C/W
SO-8, MSOP−8, MSOP-10				150		°C/W
SOT23-5, SOT23-6				200		°C/W

TYPICAL CHARACTERISTICS

All specifications at T_A = 25°C, V_S = 5V, and R_L = 150Ω connected to V_S/2 unless otherwise noted.

NONINVERTING GAIN
SMALL−SIGNAL FREQUENCY RESPONSE

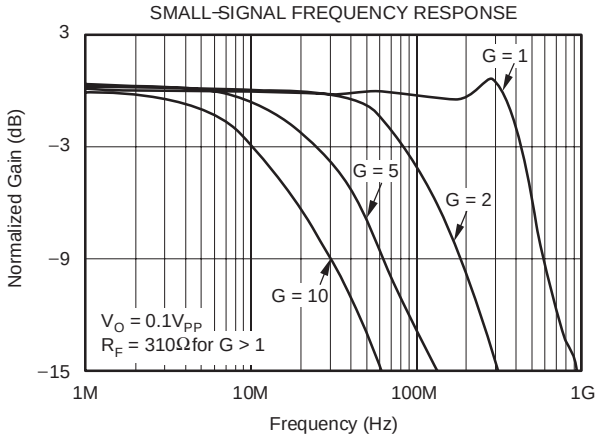

INVERTING GAIN
SMALL−SIGNAL FREQUENCY RESPONSE

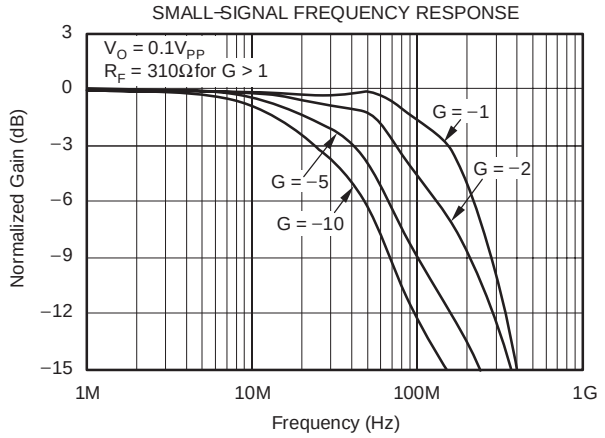

LARGE−SIGNAL STEP RESPONSE

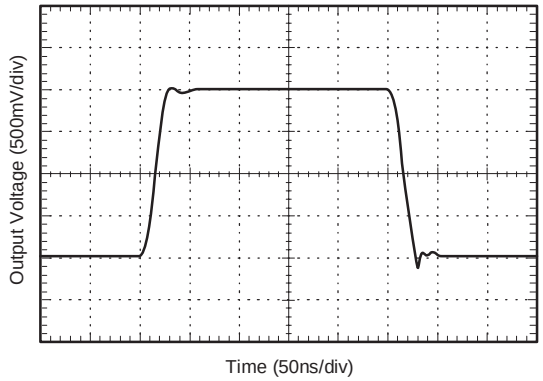

SMALL−SIGNAL STEP RESPONSE

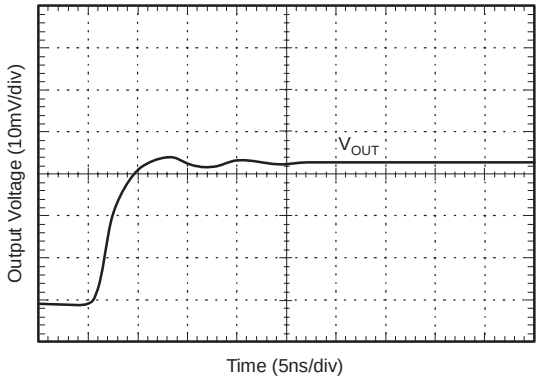

LARGE−SIGNAL ENABLE/DISABLE RESPONSE

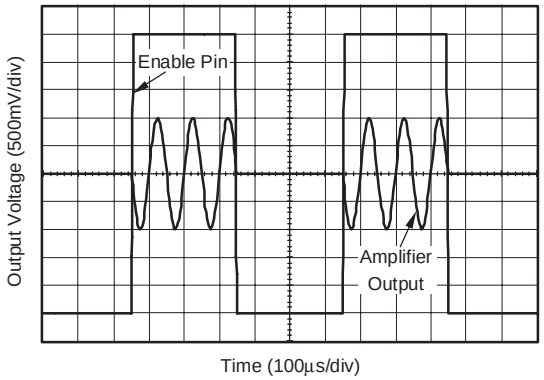

0.1dB GAIN FLATNESS FOR VARIOUS R_F

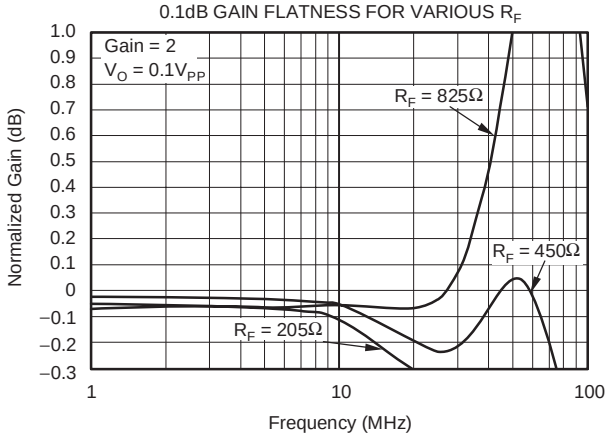

TYPICAL CHARACTERISTICS (continued)

All specifications at T_A = 25°C, V_S = 5V, and R_L = 150Ω connected to V_S/2 unless otherwise noted.

HARMONIC DISTORTION vs OUTPUT VOLTAGE

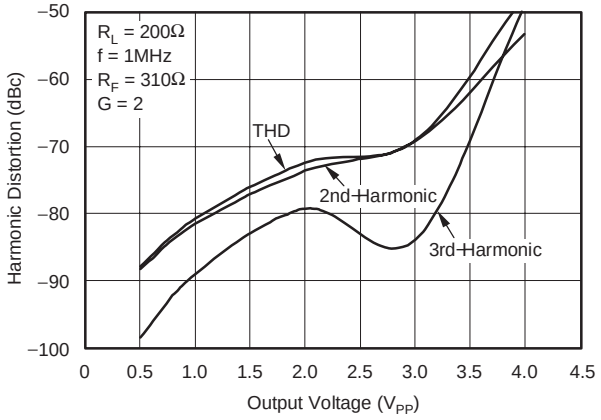

HARMONIC DISTORTION vs NONINVERTING GAIN

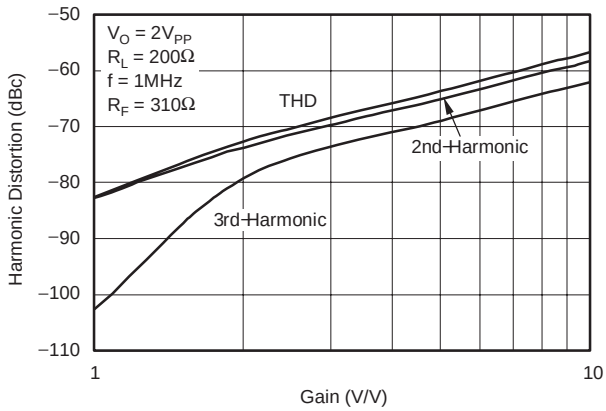

HARMONIC DISTORTION vs INVERTING GAIN

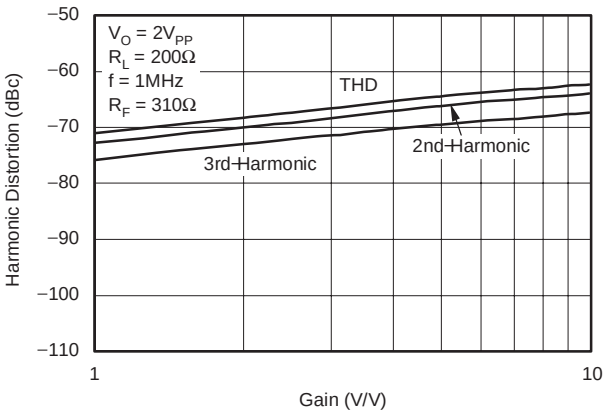

HARMONIC DISTORTION vs FREQUENCY

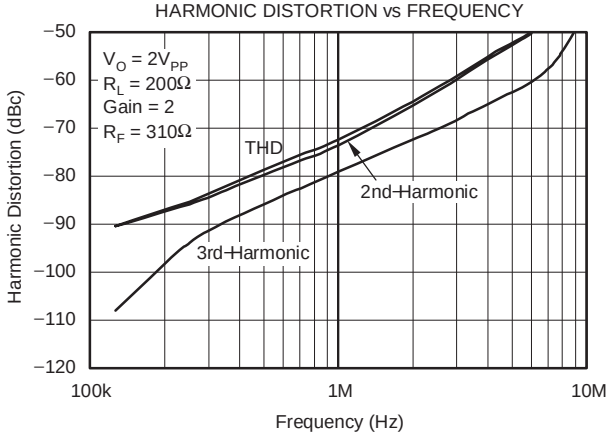

HARMONIC DISTORTION vs LOAD RESISTANCE

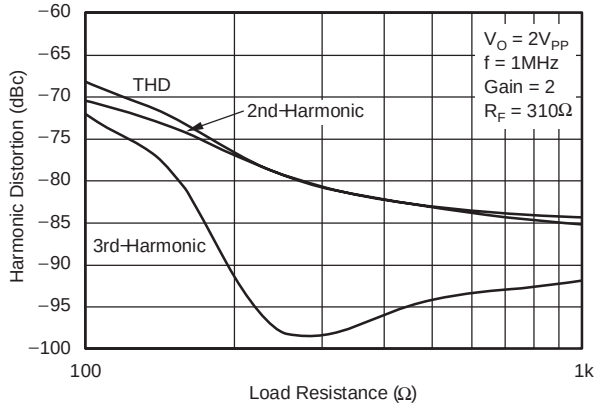

INPUT VOLTAGE AND CURRENT NOISE SPECTRAL DENSITY vs FREQUENCY

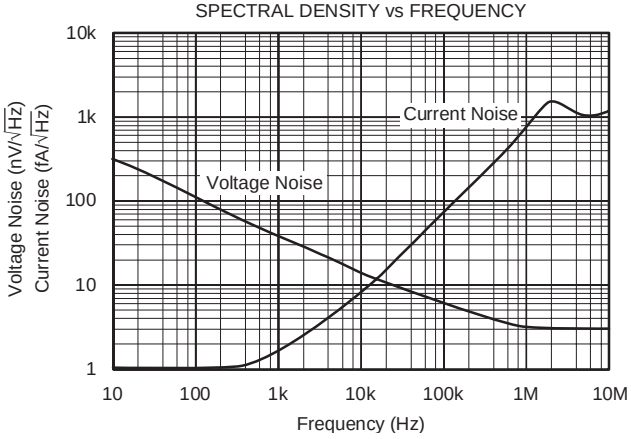

TYPICAL CHARACTERISTICS (continued)

All specifications at T_A = 25°C, V_S = 5V, and R_L = 150Ω connected to V_S/2 unless otherwise noted.

FREQUENCY RESPONSE FOR VARIOUS R_L

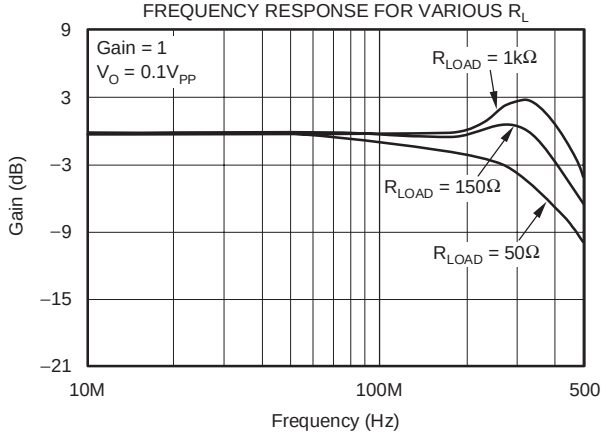

FREQUENCY RESPONSE vs CAPACITIVE LOAD

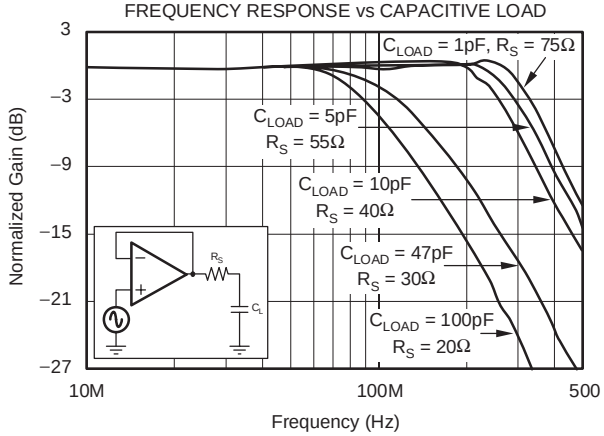

COMMON-MODE REJECTION RATIO AND
POWER-SUPPLY REJECTION RATIO vs FREQUENCY

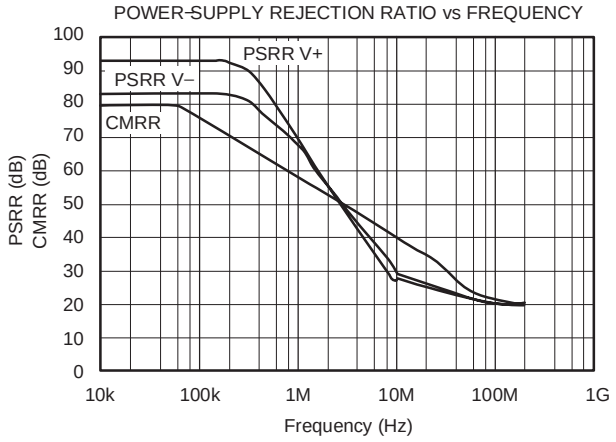

OPEN-LOOP GAIN AND PHASE vs FREQUENCY

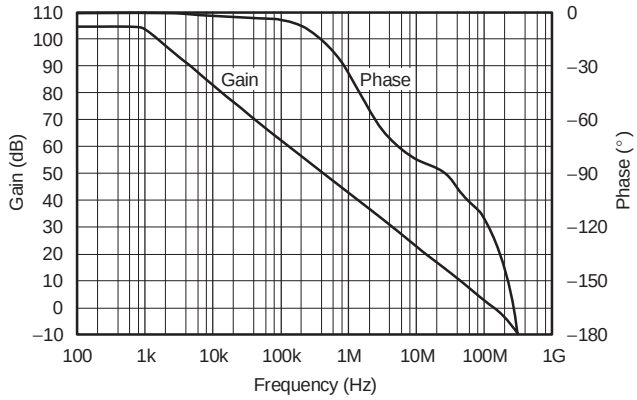

COMPOSITE VIDEO
DIFFERENTIAL GAIN AND PHASE

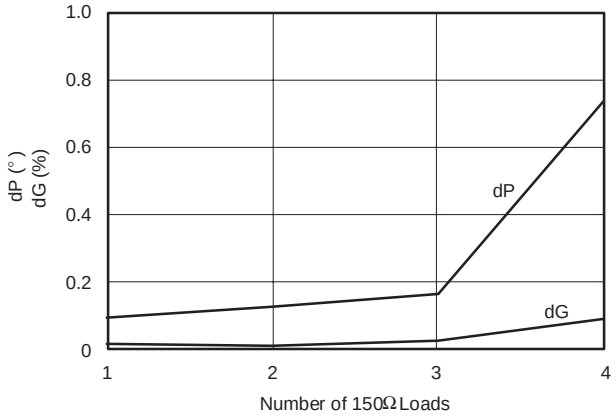

OUTPUT VOLTAGE SWING vs OUTPUT CURRENT

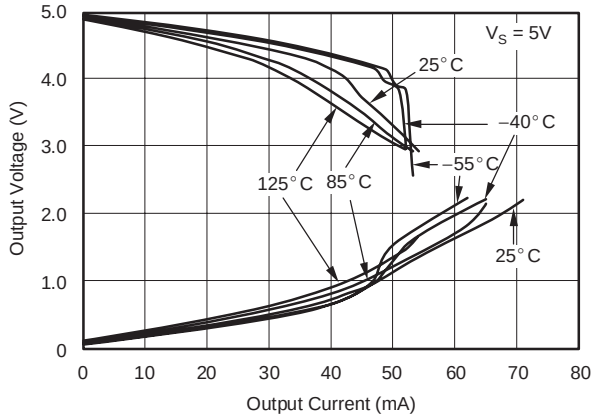

TYPICAL CHARACTERISTICS (continued)

All specifications at T_A = 25°C, V_S = 5V, and R_L = 150Ω connected to V_S/2 unless otherwise noted.

OUTPUT VOLTAGE SWING vs OUTPUT CURRENT

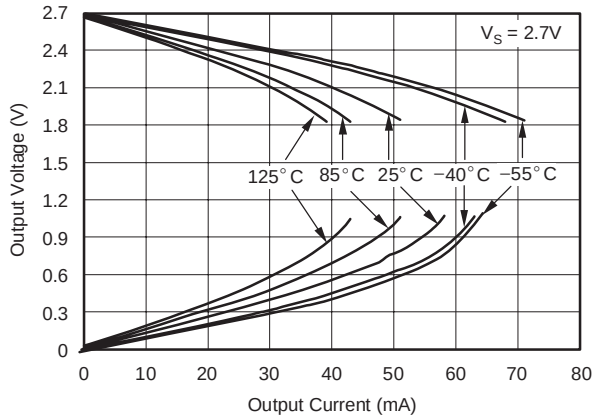

INPUT BIAS CURRENT vs TEMPERATURE

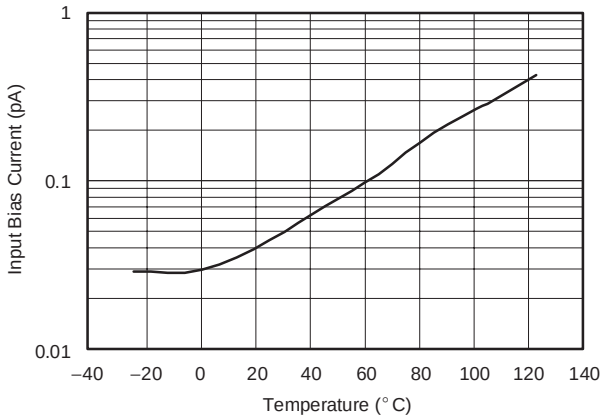

QUIESCENT CURRENT vs TEMPERATURE

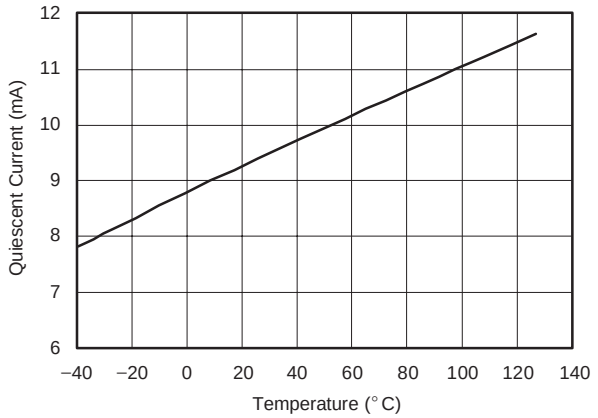

INPUT BIAS CURRENT vs COMMON-MODE VOLTAGE

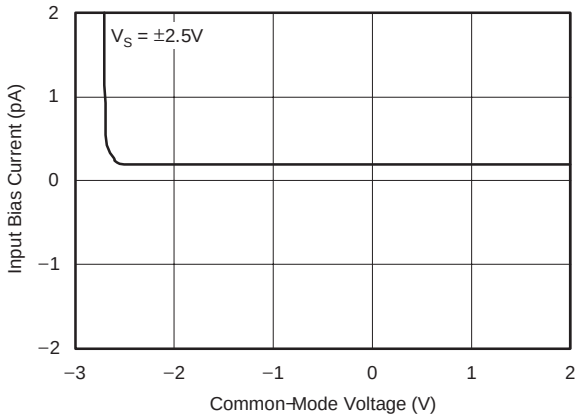

POWER-SUPPLY REJECTION RATIO AND
COMMON-MODE REJECTION RATIO vs TEMPERATURE

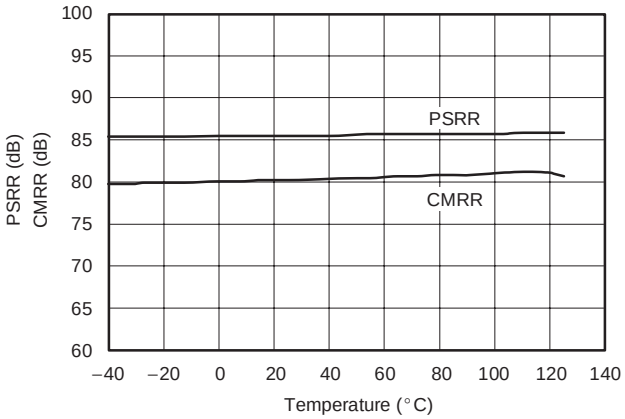

SHORT-CIRCUIT CURRENT vs TEMPERATURE

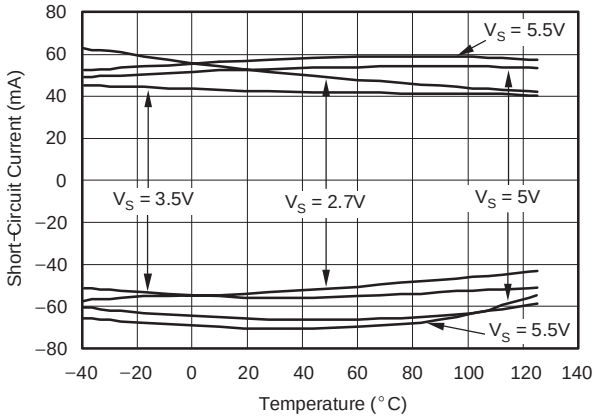

TYPICAL CHARACTERISTICS (continued)

All specifications at T_A = 25°C, V_S = 5V, and R_L = 150Ω connected to V_S/2 unless otherwise noted.

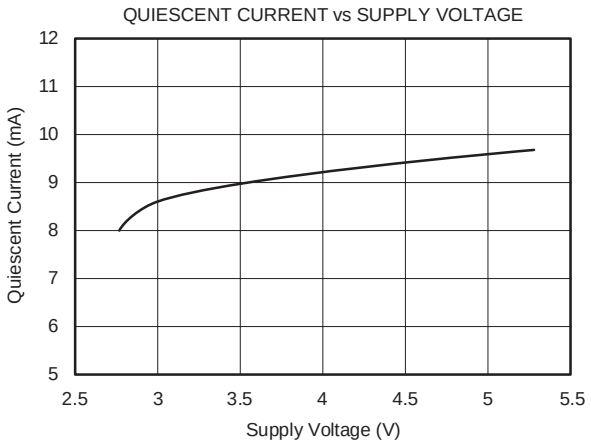

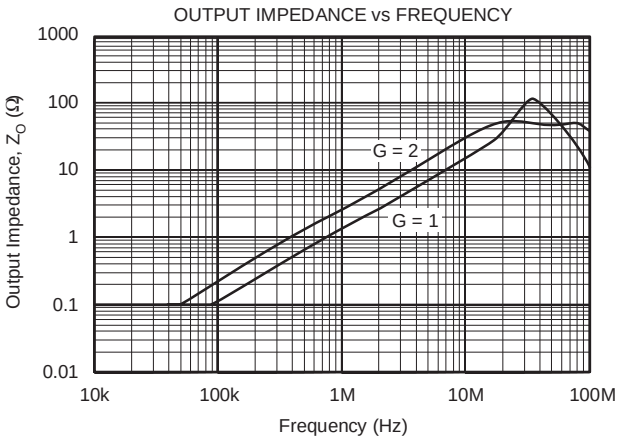

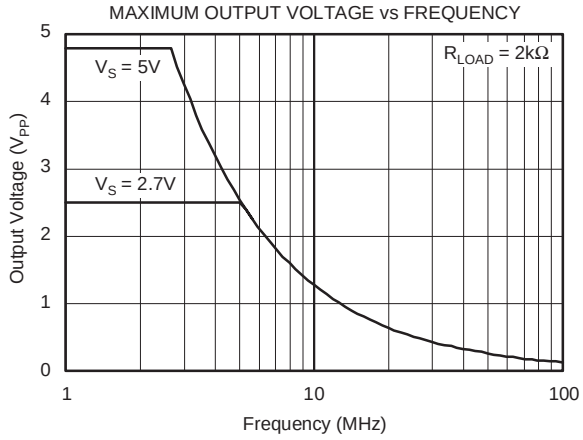

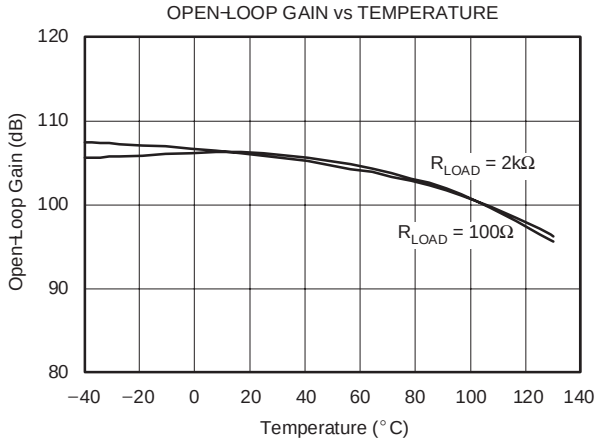

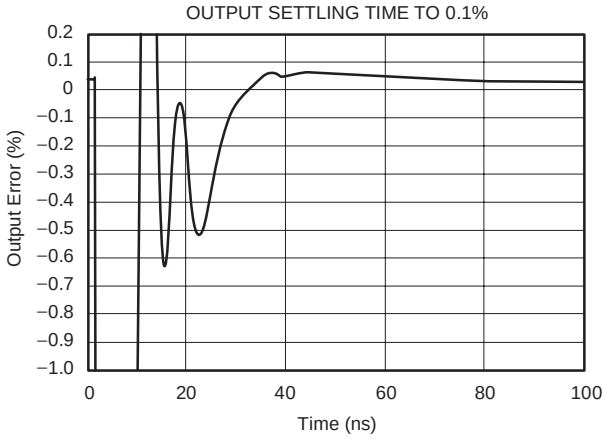

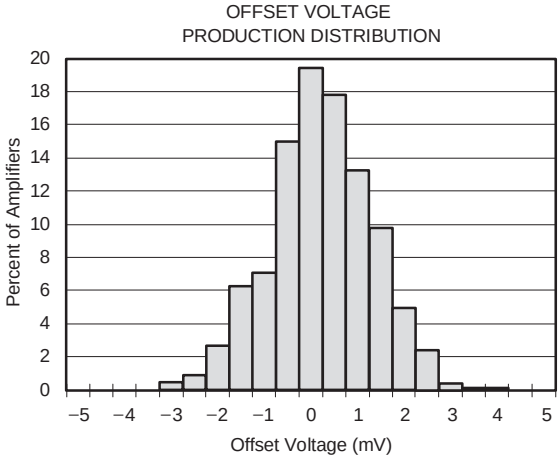

TYPICAL CHARACTERISTICS (continued)

All specifications at T_A = 25°C, V_S = 5V, and R_L = 150Ω connected to V_S/2 unless otherwise noted.

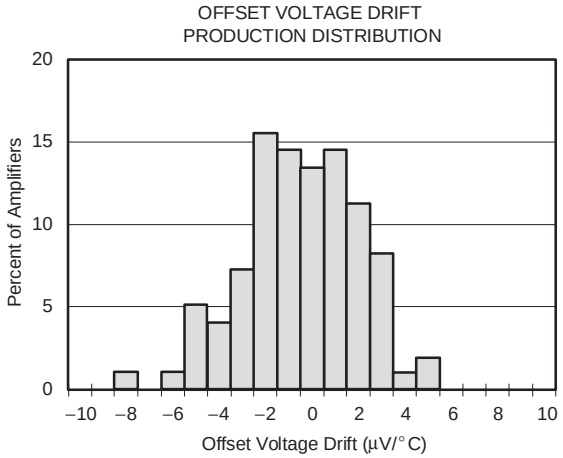

APPLICATIONS INFORMATION

The OPA300 and OPA301 series of single-supply CMOS op amps are designed to interface with high-speed 16-bit analog-to-digital converters (ADCs). Featuring wide 150MHz bandwidth, fast 150ns settling time to 16 bits, and high open loop gain, this series offers excellent performance in a small SO-8 and tiny SOT23 packages.

THEORY OF OPERATION

The OPA300 and OPA301 series op amps use a classic two-stage topology, shown in Figure 1. The differential input pair is biased to maximize slew rate without compromising stability or bandwidth. The folded cascode adds the signal from the input pair and presents a differential signal to the class AB output stage. The class AB output stage allows rail- to-rail output swing, with high-impedance loads (> 2kΩ), typically 100mV from the supply rails. With 10Ω loads, a useful output swing can be achieved and still maintain high open-loop gain. See the typical characteristic *Output Voltage Swing vs Output Current.*

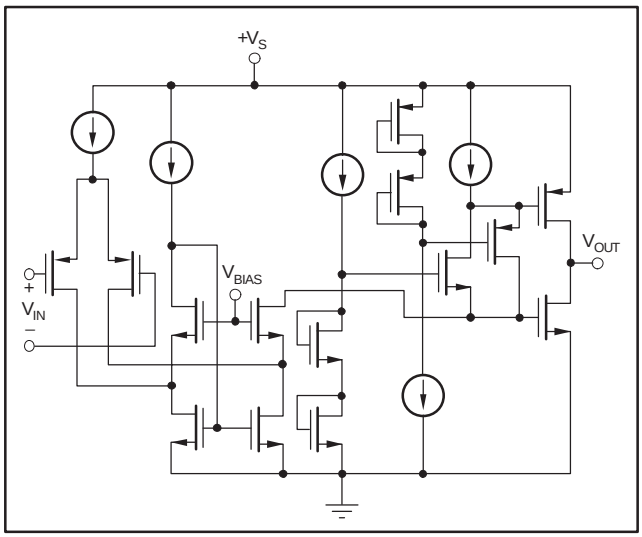

Figure 1. OPA30x Classic Two-Stage Topology

OPERATING VOLTAGE

OPA300/OPA301 series op amp parameters are fully specified from +2.7V to +5.5V. Supply voltages higher than 5.5V (absolute maximum) can cause permanent damage to the amplifier. Many specifications apply from –40°C to +125°C. Parameters that vary significantly with operating voltages or temperature are shown in the Typical Characteristics.

PCB LAYOUT

As with most high-speed operational amplifiers, board layout requires special attention to maximize AC and DC performance. Extensive use of ground planes, short lead lengths, and high-quality bypass capacitors will minimize leakage that can compromise signal quality. Guard rings applied with potential as near to the input pins as possible help minimize board leakage.

INPUT AND ESD PROTECTION

All OPA300/OPA301 series op amps' pins are static-protected with internal ESD protection diodes tied to the supplies, as shown in Figure 2. These diodes will provide overdrive protection if the current is externally limited to 10mA, as stated in the Absolute Maximum Ratings. Any input current beyond the Absolute Maximum Ratings, or long-term operation at maximum ratings, will shorten the lifespan of the amplifier.

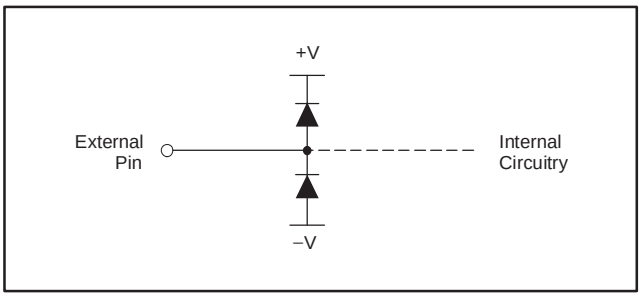

Figure 2. ESD Protection Diodes

ENABLE FUNCTION

The shutdown function of the OPA300 and OPA2300 is referenced to the negative supply voltage of the operational amplifier. A logic level HIGH enables the op amp. A valid logic HIGH is defined as 2.5V above the negative supply applied to the enable pin. A valid logic LOW is defined as < 0.8V above the negative supply pin. If dual or split power supplies are used, care should be taken to ensure logic input signals are properly referred to the negative supply voltage. If this pin is not connected to a valid high or low voltage, the internal circuitry will pull the node high and enable the part to function.

The logic input is a high-impedance CMOS input. For battery-operated applications, this feature may be used to greatly reduce the average current and extend battery life. The enable time is 10µs; disable time is 1µs. When disabled, the output assumes a high-impedance state. This allows the OPA300 to be operated as a gated amplifier, or to have its output multiplexed onto a common analog output bus.

DRIVING CAPACITIVE LOADS

When using high-speed operational amplifiers, it is extremely important to consider the effects of capacitive loading on amplifier stability. Capacitive loading will interact with the output impedance of the operational amplifier, and depending on the capacitor value, may significantly decrease the gain bandwidth, as well as introduce peaking. To reduce the effects of capacitive loading and allow for additional capacitive load drive, place a series resistor between the output and the load. This will reduce available bandwidth, but permit stable operation with capacitive loading. Figure 3 illustrates the recommended relationship between the resistor and capacitor values.

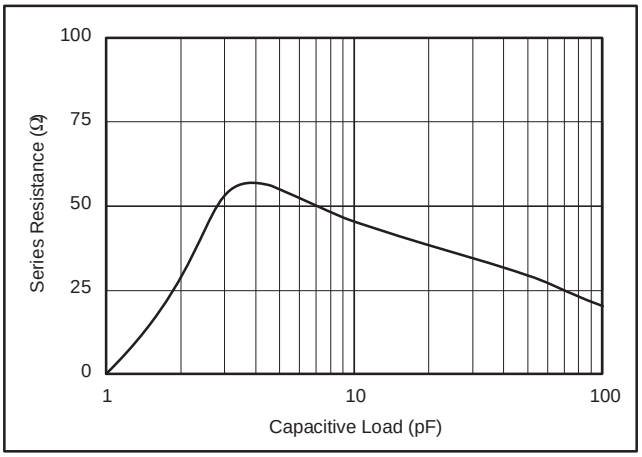

Figure 3. Recommended R_S and C_L Combinations

Amplifiers configured in unity gain are most susceptible to stability issues. The typical characteristic, *Frequency Response vs Capacitive Load,* describes the relationship between capacitive load and stability for the OPA300/OPA301 series. In unity gain, the OPA300/OPA301 series is capable of driving a few picofarads of capacitive load without compromising stability. Board level parasitic capacitance can often fall into the range of a picofarad or more, and should be minimized through good circuit-board layout practices to avoid compromising the stability of the OPA300/OPA301. For more information on detecting parasitics during testing, see the Application Note *Measuring Board Parasitics in High-Speed Analog Design* (SBOA094), available at the TI web site www.ti.com.

DRIVING A 16-BIT ADC

The OPA300/OPA301 series feature excellent THD+noise, even at frequencies greater than 1MHz, with a 16-bit settling time of 150ns. Figure 4 shows a total single supply solution for high-speed data acquisition. The OPA300/OPA301 directly drives the ADS8401, a 1.25 mega sample per second (MSPS) 16-bit data converter. The OPA300/OPA301 is configured in an inverting gain of 1, with a 5V single supply. Results of the OPA300/OPA301 performance are summarized in Table 1.

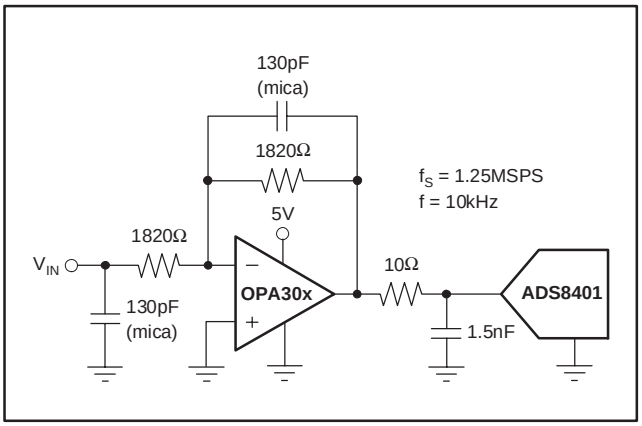

Figure 4. The OPA30x Drives the 16-Bit ADS8401

PARAMETER	RESULTS (f = 10kHz)
THD	−99.3dB
SFDR	101.2dB
THD+N	84.2dB
SNR	84.3dB

Table 1. OPA30x Performance Results Driving a 1.25MSPS ADS8401

PACKAGING INFORMATION

Orderable part number	Status (1)	Material type (2)	Package | Pins	Package qty | Carrier	RoHS (3)	Lead finish/ Ball material (4)	MSL rating/ Peak reflow (5)	Op temp (°C)	Part marking (6)
OPA2300AIDGSR	Active	Production	VSSOP (DGS) | 10	2500 | LARGE T&R	Yes	NIPDAUAG	Level-2-260C-1 YEAR	-40 to 125	C01
OPA2300AIDGSR.A	Active	Production	VSSOP (DGS) | 10	2500 | LARGE T&R	Yes	NIPDAUAG	Level-2-260C-1 YEAR	-40 to 125	C01
OPA2300AIDGST	Active	Production	VSSOP (DGS) | 10	250 | SMALL T&R	Yes	NIPDAUAG	Level-2-260C-1 YEAR	-40 to 125	C01
OPA2300AIDGST.A	Active	Production	VSSOP (DGS) | 10	250 | SMALL T&R	Yes	NIPDAUAG	Level-2-260C-1 YEAR	-40 to 125	C01
OPA2301AID	Active	Production	SOIC (D) | 8	75 | TUBE	Yes	NIPDAU	Level-2-260C-1 YEAR	-40 to 125	OPA 2301A
OPA2301AID.A	Active	Production	SOIC (D) | 8	75 | TUBE	Yes	NIPDAU	Level-2-260C-1 YEAR	-40 to 125	OPA 2301A
OPA2301AIDGKR	Active	Production	VSSOP (DGK) | 8	2500 | LARGE T&R	Yes	Call TI | Nipdauag	Level-2-260C-1 YEAR	-40 to 125	OAWM
OPA2301AIDGKR.A	Active	Production	VSSOP (DGK) | 8	2500 | LARGE T&R	Yes	Call TI	Level-2-260C-1 YEAR	-40 to 125	OAWM
OPA2301AIDGKT	Active	Production	VSSOP (DGK) | 8	250 | SMALL T&R	Yes	Call TI | Nipdauag	Level-2-260C-1 YEAR	-40 to 125	OAWM
OPA2301AIDGKT.A	Active	Production	VSSOP (DGK) | 8	250 | SMALL T&R	Yes	Call TI	Level-2-260C-1 YEAR	-40 to 125	OAWM
OPA2301AIDR	Active	Production	SOIC (D) | 8	2500 | LARGE T&R	Yes	NIPDAU	Level-2-260C-1 YEAR	-40 to 125	OPA 2301A
OPA2301AIDR.A	Active	Production	SOIC (D) | 8	2500 | LARGE T&R	Yes	NIPDAU	Level-2-260C-1 YEAR	-40 to 125	OPA 2301A
OPA300AID	Active	Production	SOIC (D) | 8	75 | TUBE	Yes	NIPDAU	Level-2-260C-1 YEAR	-40 to 125	OPA 300A
OPA300AID.A	Active	Production	SOIC (D) | 8	75 | TUBE	Yes	NIPDAU	Level-2-260C-1 YEAR	-40 to 125	OPA 300A
OPA300AIDBVR	Active	Production	SOT-23 (DBV) | 6	3000 | LARGE T&R	Yes	NIPDAU	Level-2-260C-1 YEAR	-40 to 125	A52
OPA300AIDBVR.A	Active	Production	SOT-23 (DBV) | 6	3000 | LARGE T&R	Yes	NIPDAU	Level-2-260C-1 YEAR	-40 to 125	A52
OPA300AIDBVT	Active	Production	SOT-23 (DBV) | 6	250 | SMALL T&R	Yes	NIPDAU	Level-2-260C-1 YEAR	-40 to 125	A52
OPA300AIDBVT.A	Active	Production	SOT-23 (DBV) | 6	250 | SMALL T&R	Yes	NIPDAU	Level-2-260C-1 YEAR	-40 to 125	A52
OPA301AID	Active	Production	SOIC (D) | 8	75 | TUBE	Yes	NIPDAU	Level-2-260C-1 YEAR	-40 to 125	OPA 301A
OPA301AID.A	Active	Production	SOIC (D) | 8	75 | TUBE	Yes	NIPDAU	Level-2-260C-1 YEAR	-40 to 125	OPA 301A
OPA301AIDBVR	Active	Production	SOT-23 (DBV) | 5	3000 | LARGE T&R	Yes	NIPDAU	Level-2-260C-1 YEAR	-40 to 125	AUP
OPA301AIDBVR.A	Active	Production	SOT-23 (DBV) | 5	3000 | LARGE T&R	Yes	NIPDAU	Level-2-260C-1 YEAR	-40 to 125	AUP
OPA301AIDBVRG4	Active	Production	SOT-23 (DBV) | 5	3000 | LARGE T&R	Yes	NIPDAU	Level-2-260C-1 YEAR	-40 to 125	AUP

Orderable part number	Status (1)	Material type (2)	Package | Pins	Package qty | Carrier	RoHS (3)	Lead finish/ Ball material (4)	MSL rating/ Peak reflow (5)	Op temp (°C)	Part marking (6)
OPA301AIDBVRG4.A	Active	Production	SOT-23 (DBV) | 5	3000 | LARGE T&R	Yes	NIPDAU	Level-2-260C-1 YEAR	-40 to 125	AUP
OPA301AIDBVT	Active	Production	SOT-23 (DBV) | 5	250 | SMALL T&R	Yes	NIPDAU	Level-2-260C-1 YEAR	-40 to 125	AUP
OPA301AIDBVT.A	Active	Production	SOT-23 (DBV) | 5	250 | SMALL T&R	Yes	NIPDAU	Level-2-260C-1 YEAR	-40 to 125	AUP
OPA301AIDR	Active	Production	SOIC (D) | 8	2500 | LARGE T&R	Yes	NIPDAU	Level-2-260C-1 YEAR	-40 to 125	OPA 301A
OPA301AIDR.A	Active	Production	SOIC (D) | 8	2500 | LARGE T&R	Yes	NIPDAU	Level-2-260C-1 YEAR	-40 to 125	OPA 301A

(1) **Status:** For more details on status, see our product life cycle.

(2) **Material type:** When designated, preproduction parts are prototypes/experimental devices, and are not yet approved or released for full production. Testing and final process, including without limitation quality assurance, reliability performance testing, and/or process qualification, may not yet be complete, and this item is subject to further changes or possible discontinuation. If available for ordering, purchases will be subject to an additional waiver at checkout, and are intended for early internal evaluation purposes only. These items are sold without warranties of any kind.

(3) **RoHS values:** Yes, No, RoHS Exempt. See the TI RoHS Statement for additional information and value definition.

(4) **Lead finish/Ball material:** Parts may have multiple material finish options. Finish options are separated by a vertical ruled line. Lead finish/Ball material values may wrap to two lines if the finish value exceeds the maximum column width.

(5) **MSL rating/Peak reflow:** The moisture sensitivity level ratings and peak solder (reflow) temperatures. In the event that a part has multiple moisture sensitivity ratings, only the lowest level per JEDEC standards is shown. Refer to the shipping label for the actual reflow temperature that will be used to mount the part to the printed circuit board.

(6) **Part marking:** There may be an additional marking, which relates to the logo, the lot trace code information, or the environmental category of the part.

Multiple part markings will be inside parentheses. Only one part marking contained in parentheses and separated by a "~" will appear on a part. If a line is indented then it is a continuation of the previous line and the two combined represent the entire part marking for that device.

Important Information and Disclaimer: The information provided on this page represents TI's knowledge and belief as of the date that it is provided. TI bases its knowledge and belief on information provided by third parties, and makes no representation or warranty as to the accuracy of such information. Efforts are underway to better integrate information from third parties. TI has taken and continues to take reasonable steps to provide representative and accurate information but may not have conducted destructive testing or chemical analysis on incoming materials and chemicals. TI and TI suppliers consider certain information to be proprietary, and thus CAS numbers and other limited information may not be available for release.

In no event shall TI's liability arising out of such information exceed the total purchase price of the TI part(s) at issue in this document sold by TI to Customer on an annual basis.

TAPE AND REEL INFORMATION

REEL DIMENSIONS

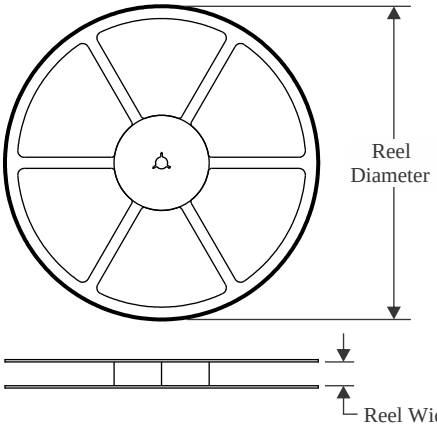

TAPE DIMENSIONS

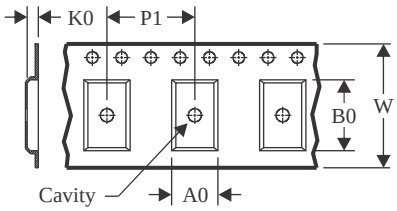

A0	Dimension designed to accommodate the component width
B0	Dimension designed to accommodate the component length
K0	Dimension designed to accommodate the component thickness
W	Overall width of the carrier tape
P1	Pitch between successive cavity centers

QUADRANT ASSIGNMENTS FOR PIN 1 ORIENTATION IN TAPE

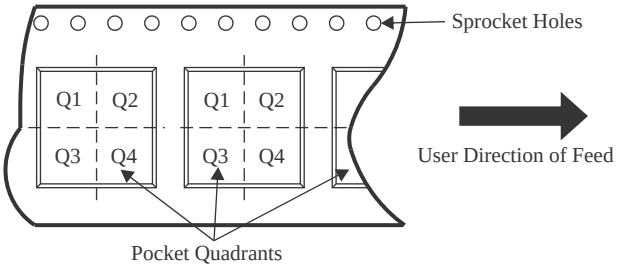

*All dimensions are nominal

Device	Package Type	Package Drawing	Pins	SPQ	Reel Diameter (mm)	Reel Width W1 (mm)	A0 (mm)	B0 (mm)	K0 (mm)	P1 (mm)	W (mm)	Pin1 Quadrant
OPA2300AIDGSR	VSSOP	DGS	10	2500	330.0	12.4	5.3	3.4	1.4	8.0	12.0	Q1
OPA2300AIDGST	VSSOP	DGS	10	250	180.0	12.4	5.3	3.4	1.4	8.0	12.0	Q1
OPA2301AIDR	SOIC	D	8	2500	330.0	12.4	6.4	5.2	2.1	8.0	12.0	Q1
OPA300AIDBVR	SOT-23	DBV	6	3000	178.0	9.0	3.23	3.17	1.37	4.0	8.0	Q3
OPA300AIDBVT	SOT-23	DBV	6	250	178.0	9.0	3.23	3.17	1.37	4.0	8.0	Q3
OPA301AIDBVR	SOT-23	DBV	5	3000	178.0	9.0	3.3	3.2	1.4	4.0	8.0	Q3
OPA301AIDBVRG4	SOT-23	DBV	5	3000	178.0	9.0	3.3	3.2	1.4	4.0	8.0	Q3
OPA301AIDBVT	SOT-23	DBV	5	250	178.0	9.0	3.3	3.2	1.4	4.0	8.0	Q3
OPA301AIDR	SOIC	D	8	2500	330.0	12.4	6.4	5.2	2.1	8.0	12.0	Q1

TAPE AND REEL BOX DIMENSIONS

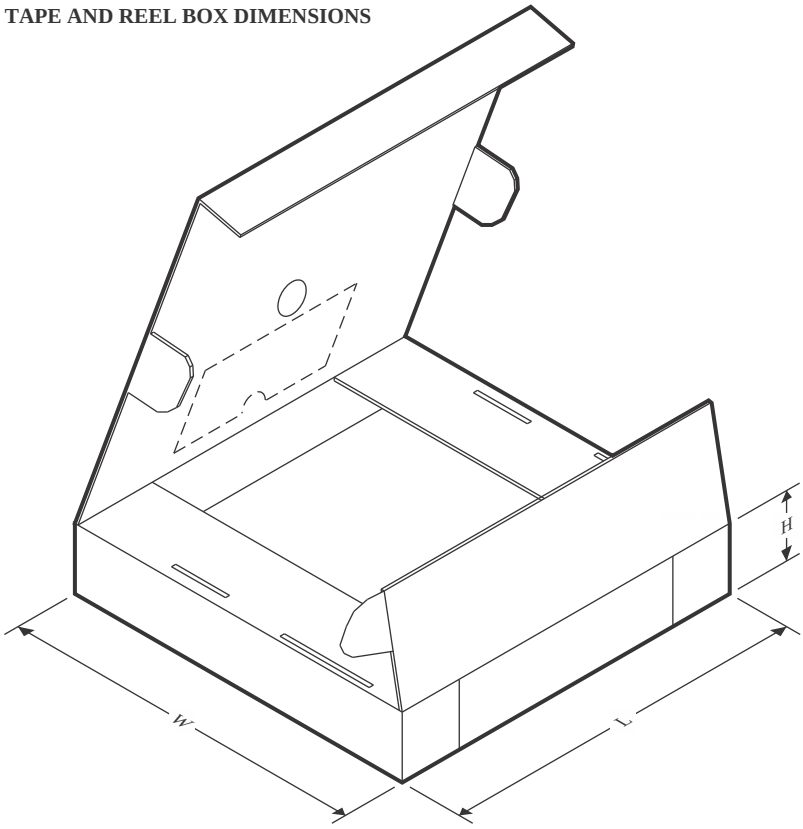

*All dimensions are nominal

Device	Package Type	Package Drawing	Pins	SPQ	Length (mm)	Width (mm)	Height (mm)
OPA2300AIDGSR	VSSOP	DGS	10	2500	356.0	356.0	35.0
OPA2300AIDGST	VSSOP	DGS	10	250	213.0	191.0	35.0
OPA2301AIDR	SOIC	D	8	2500	356.0	356.0	35.0
OPA300AIDBVR	SOT-23	DBV	6	3000	445.0	220.0	345.0
OPA300AIDBVT	SOT-23	DBV	6	250	445.0	220.0	345.0
OPA301AIDBVR	SOT-23	DBV	5	3000	180.0	180.0	18.0
OPA301AIDBVRG4	SOT-23	DBV	5	3000	180.0	180.0	18.0
OPA301AIDBVT	SOT-23	DBV	5	250	180.0	180.0	18.0
OPA301AIDR	SOIC	D	8	2500	356.0	356.0	35.0

TUBE

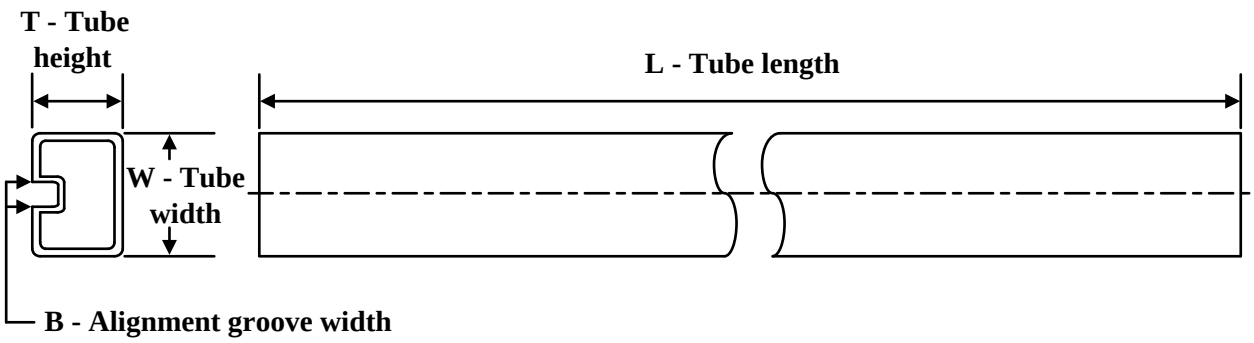

*All dimensions are nominal

Device	Package Name	Package Type	Pins	SPQ	L (mm)	W (mm)	T (µm)	B (mm)
OPA2301AID	D	SOIC	8	75	506.6	8	3940	4.32
OPA2301AID.A	D	SOIC	8	75	506.6	8	3940	4.32
OPA300AID	D	SOIC	8	75	506.6	8	3940	4.32
OPA300AID.A	D	SOIC	8	75	506.6	8	3940	4.32
OPA301AID	D	SOIC	8	75	506.6	8	3940	4.32
OPA301AID.A	D	SOIC	8	75	506.6	8	3940	4.32

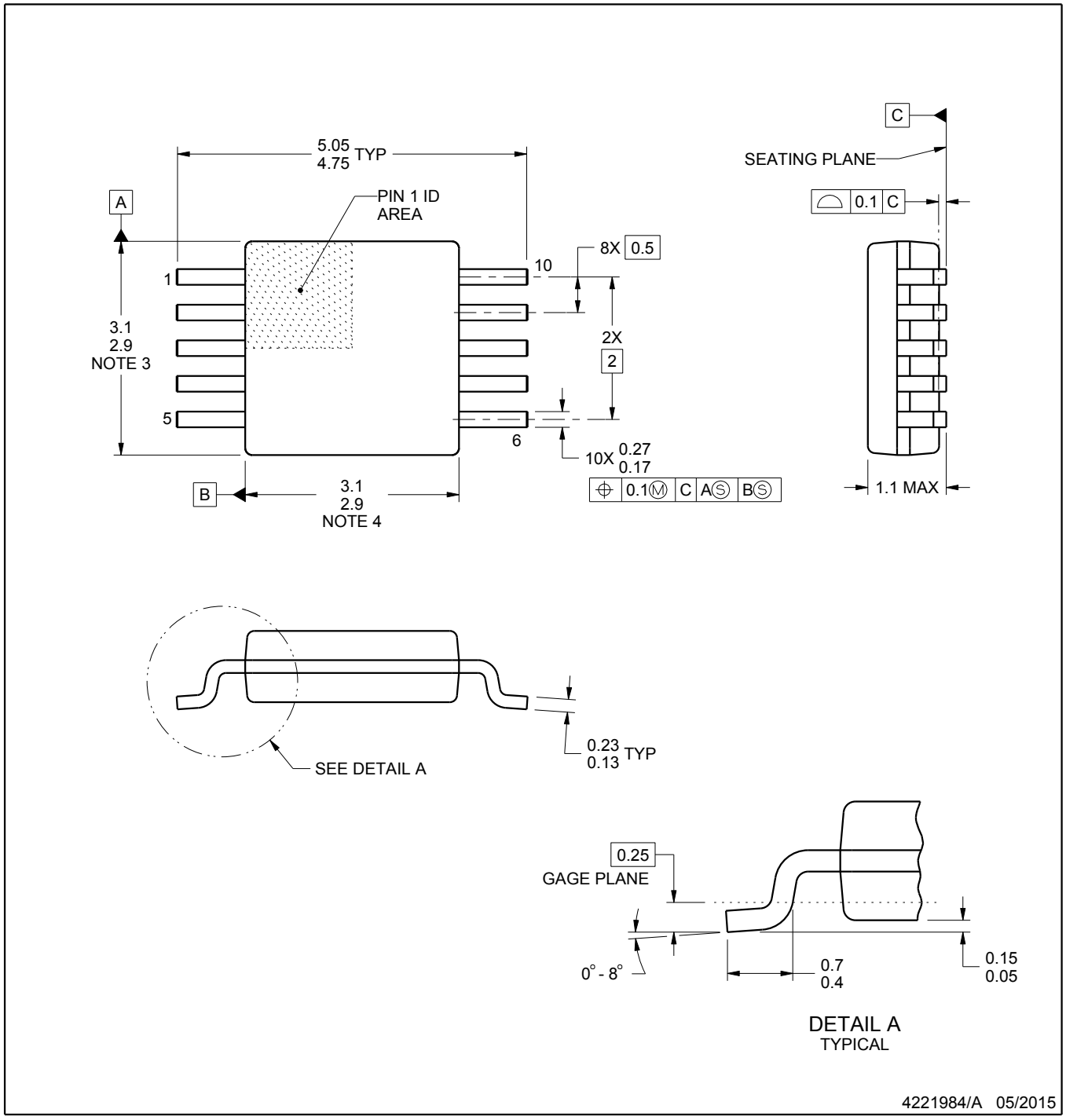

NOTES:

1. All linear dimensions are in millimeters. Any dimensions in parenthesis are for reference only. Dimensioning and tolerancing per ASME Y14.5M.
2. This drawing is subject to change without notice.
3. This dimension does not include mold flash, protrusions, or gate burrs. Mold flash, protrusions, or gate burrs shall not exceed 0.15 mm per side.
4. This dimension does not include interlead flash. Interlead flash shall not exceed 0.25 mm per side.
5. Reference JEDEC registration MO-187, variation BA.

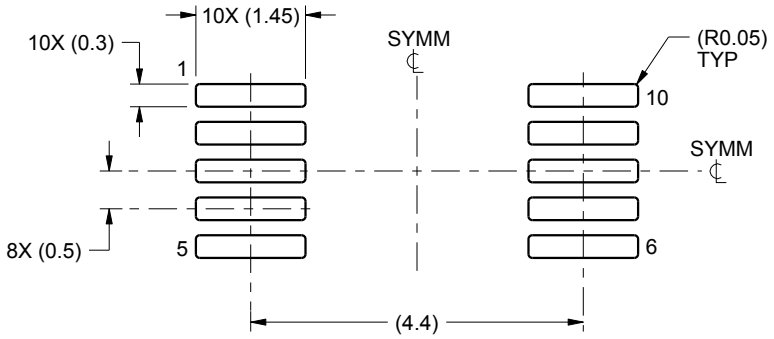

LAND PATTERN EXAMPLE
SCALE:10X

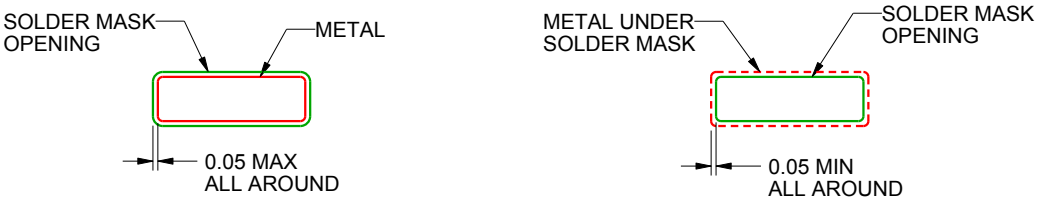

NON SOLDER MASK
DEFINED

SOLDER MASK
DEFINED

SOLDER MASK DETAILS
NOT TO SCALE

4221984/A 05/2015

NOTES: (continued)

6. Publication IPC-7351 may have alternate designs.
7. Solder mask tolerances between and around signal pads can vary based on board fabrication site.

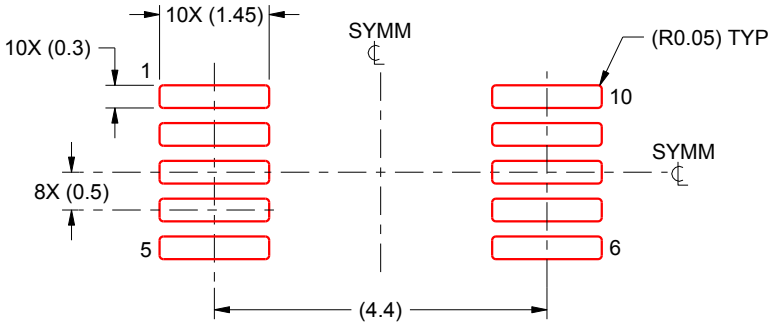

SOLDER PASTE EXAMPLE
BASED ON 0.125 mm THICK STENCIL
SCALE:10X

4221984/A 05/2015

NOTES: (continued)

8. Laser cutting apertures with trapezoidal walls and rounded corners may offer better paste release. IPC-7525 may have alternate design recommendations.
9. Board assembly site may have different recommendations for stencil design.

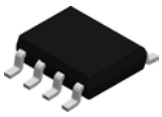

PACKAGE OUTLINE

D0008A

SOIC - 1.75 mm max height

SMALL OUTLINE INTEGRATED CIRCUIT

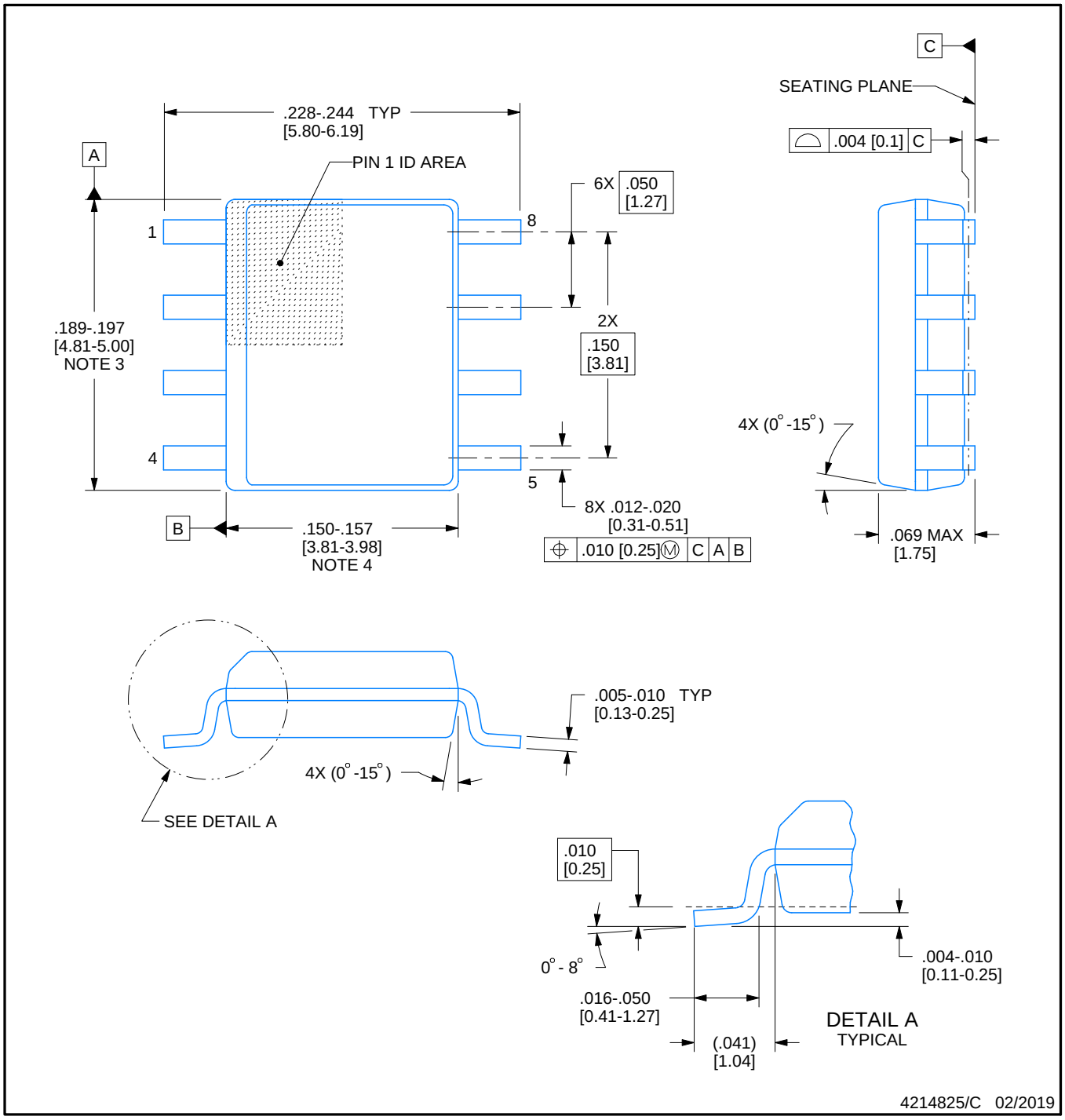

NOTES:

1. Linear dimensions are in inches [millimeters]. Dimensions in parenthesis are for reference only. Controlling dimensions are in inches. Dimensioning and tolerancing per ASME Y14.5M.
2. This drawing is subject to change without notice.
3. This dimension does not include mold flash, protrusions, or gate burrs. Mold flash, protrusions, or gate burrs shall not exceed .006 [0.15] per side.
4. This dimension does not include interlead flash.
5. Reference JEDEC registration MS-012, variation AA.

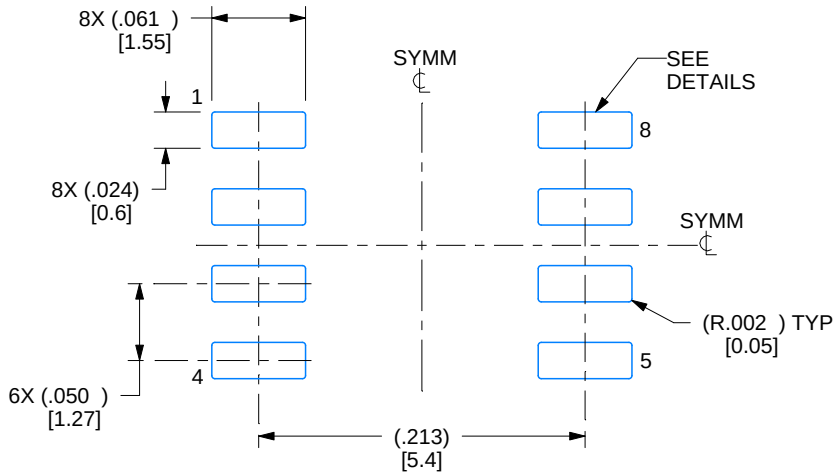

LAND PATTERN EXAMPLE
EXPOSED METAL SHOWN
SCALE:8X

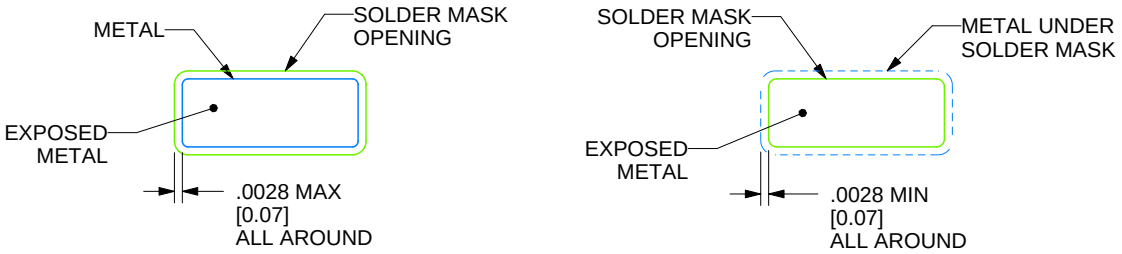

SOLDER MASK DETAILS

4214825/C 02/2019

NOTES: (continued)

6. Publication IPC-7351 may have alternate designs.
7. Solder mask tolerances between and around signal pads can vary based on board fabrication site.

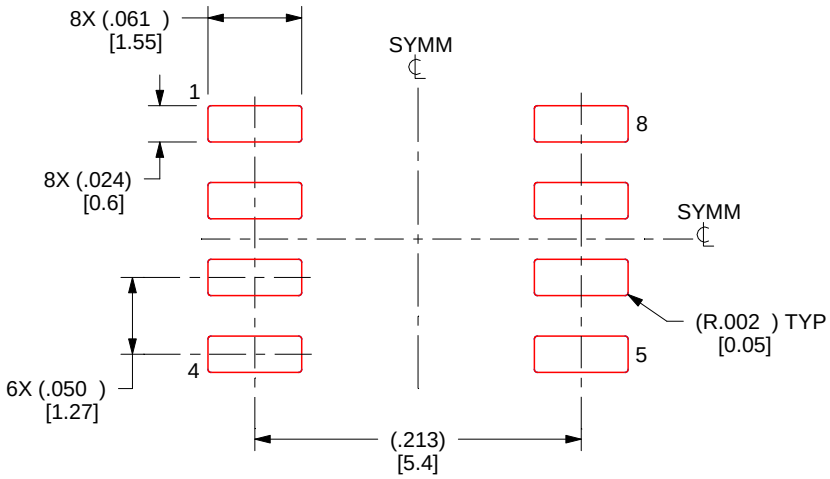

SOLDER PASTE EXAMPLE
BASED ON .005 INCH [0.125 MM] THICK STENCIL
SCALE:8X

4214825/C 02/2019

NOTES: (continued)

8. Laser cutting apertures with trapezoidal walls and rounded corners may offer better paste release. IPC-7525 may have alternate design recommendations.
9. Board assembly site may have different recommendations for stencil design.

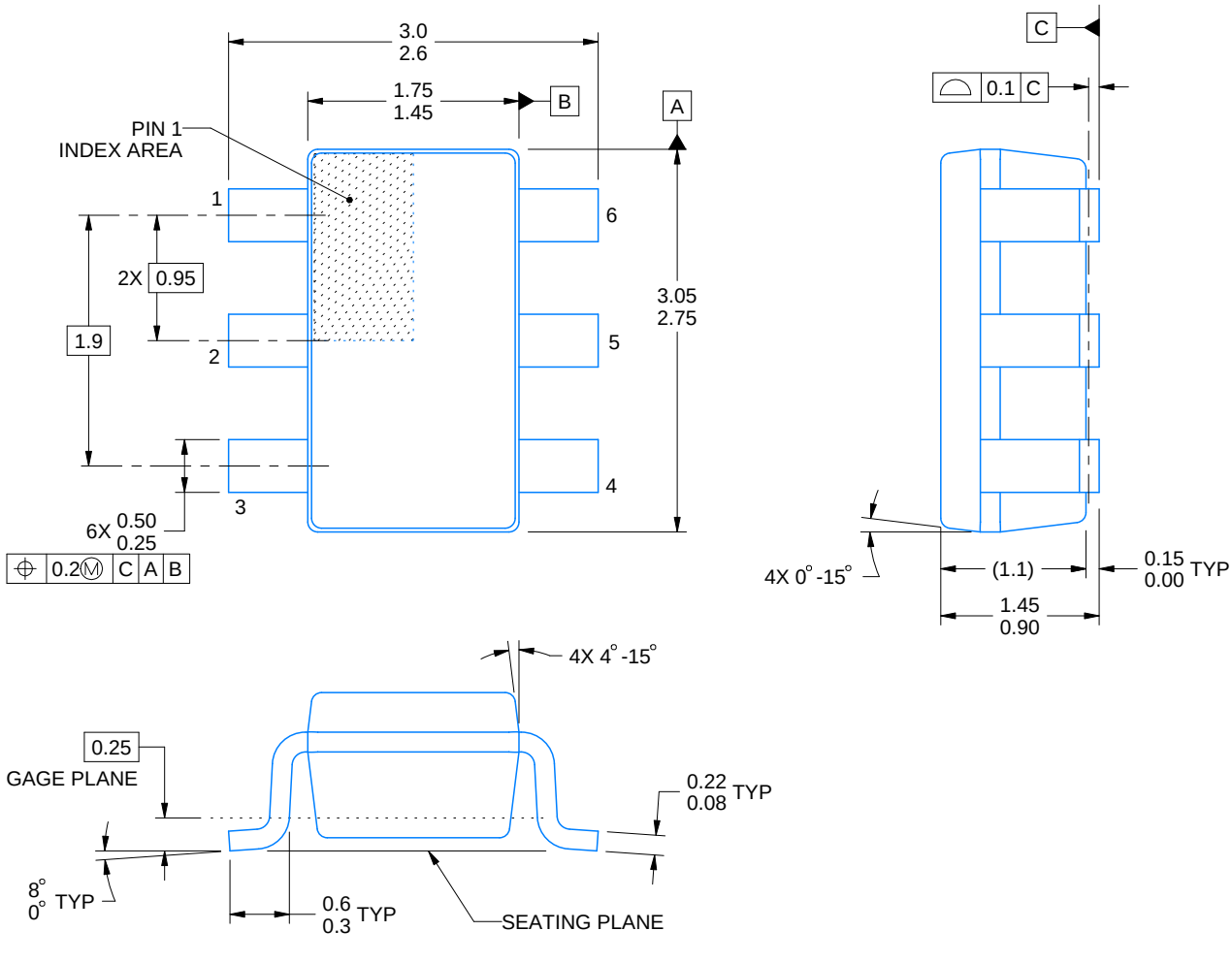

4214840/G 08/2024

NOTES:

1. All linear dimensions are in millimeters. Any dimensions in parenthesis are for reference only. Dimensioning and tolerancing per ASME Y14.5M.
2. This drawing is subject to change without notice.
3. Body dimensions do not include mold flash or protrusion. Mold flash and protrusion shall not exceed 0.25 per side.
4. Leads 1,2,3 may be wider than leads 4,5,6 for package orientation.
5. Refernce JEDEC MO-178.

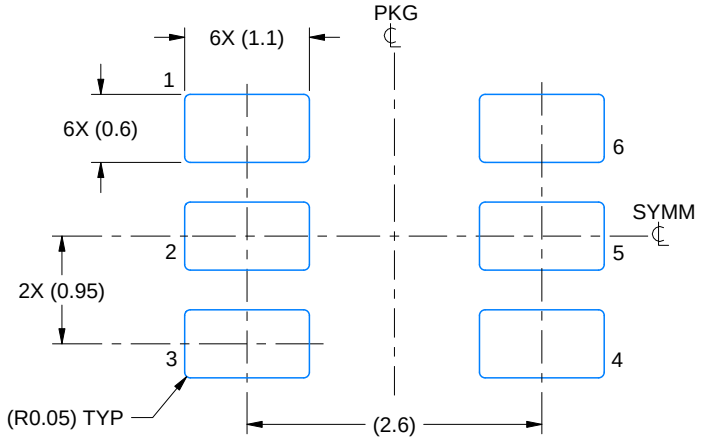

LAND PATTERN EXAMPLE
EXPOSED METAL SHOWN
SCALE:15X

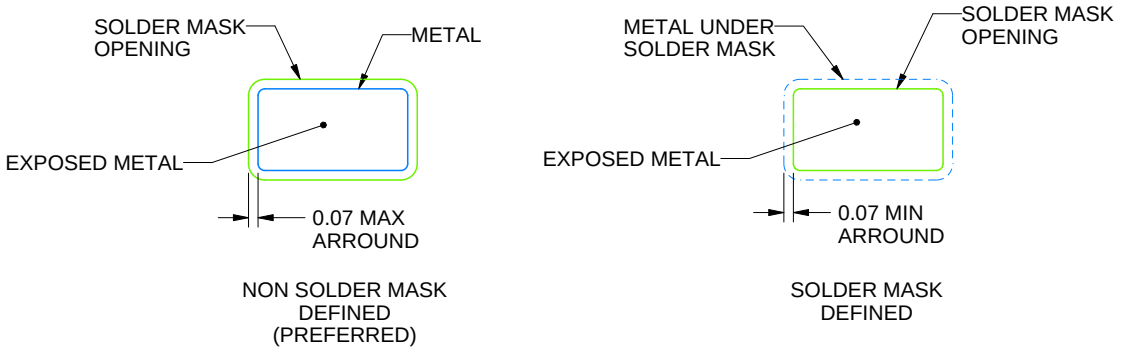

SOLDER MASK DETAILS

4214840/G 08/2024

NOTES: (continued)

6. Publication IPC-7351 may have alternate designs.
7. Solder mask tolerances between and around signal pads can vary based on board fabrication site.

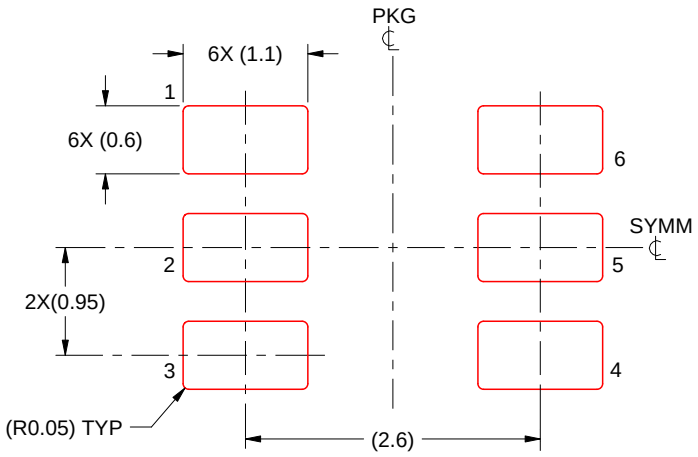

SOLDER PASTE EXAMPLE
BASED ON 0.125 mm THICK STENCIL
SCALE:15X

4214840/G 08/2024

NOTES: (continued)

8. Laser cutting apertures with trapezoidal walls and rounded corners may offer better paste release. IPC-7525 may have alternate design recommendations.
9. Board assembly site may have different recommendations for stencil design.

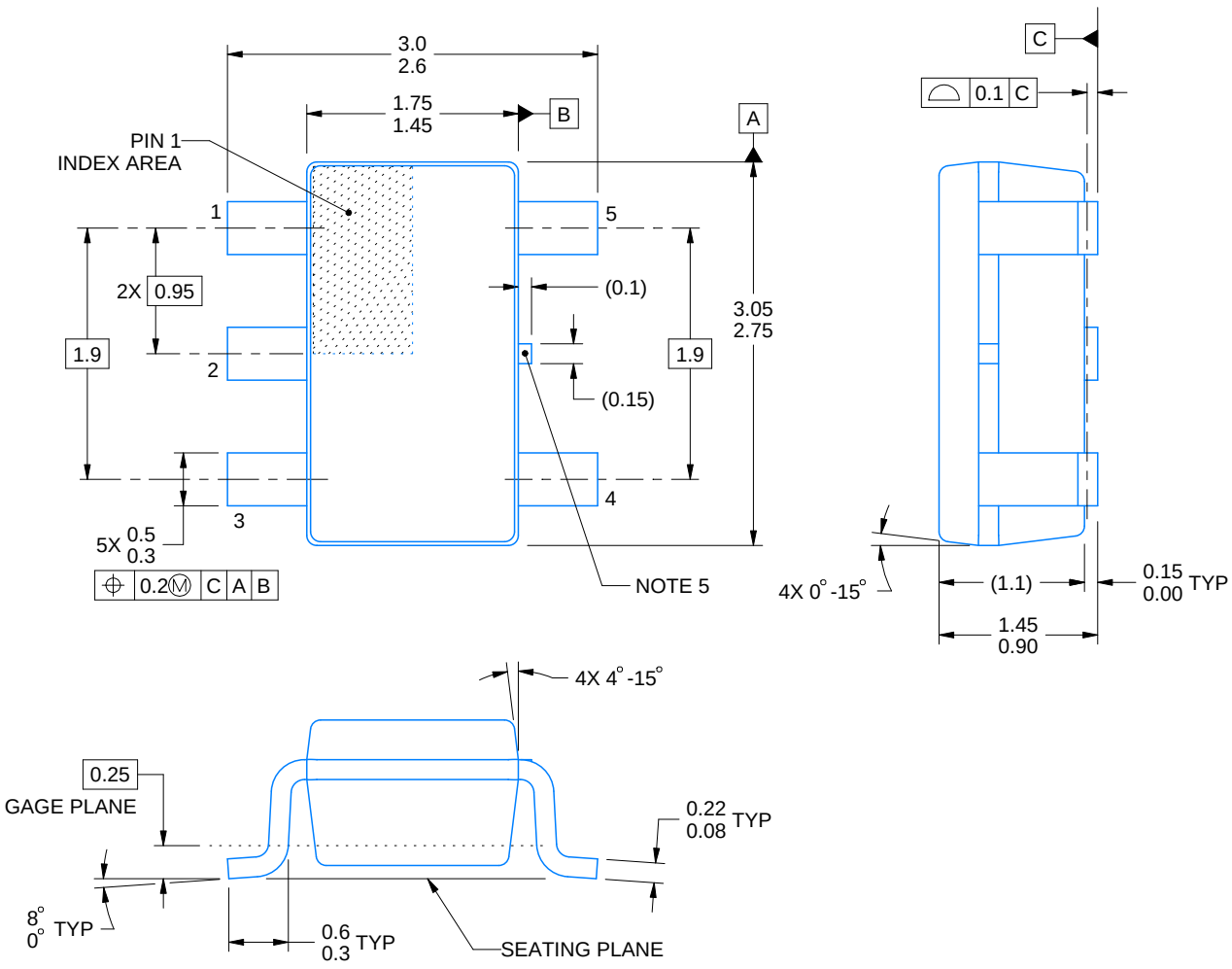

4214839/K 08/2024

NOTES:

1. All linear dimensions are in millimeters. Any dimensions in parenthesis are for reference only. Dimensioning and tolerancing per ASME Y14.5M.
2. This drawing is subject to change without notice.
3. Refernce JEDEC MO-178.
4. Body dimensions do not include mold flash, protrusions, or gate burrs. Mold flash, protrusions, or gate burrs shall not exceed 0.25 mm per side.
5. Support pin may differ or may not be present.

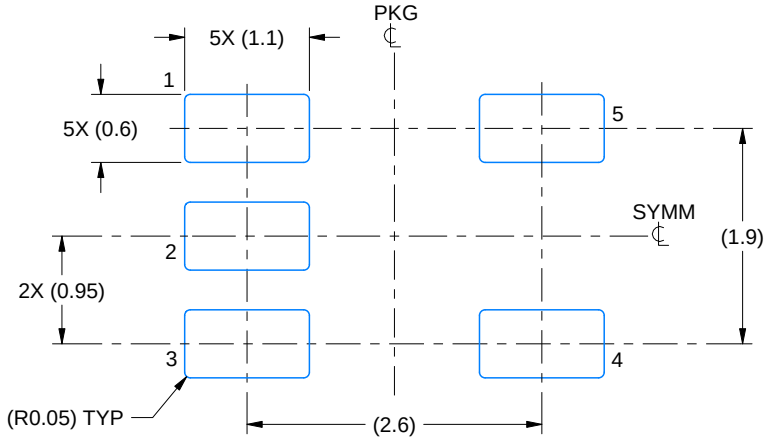

LAND PATTERN EXAMPLE
EXPOSED METAL SHOWN
SCALE:15X

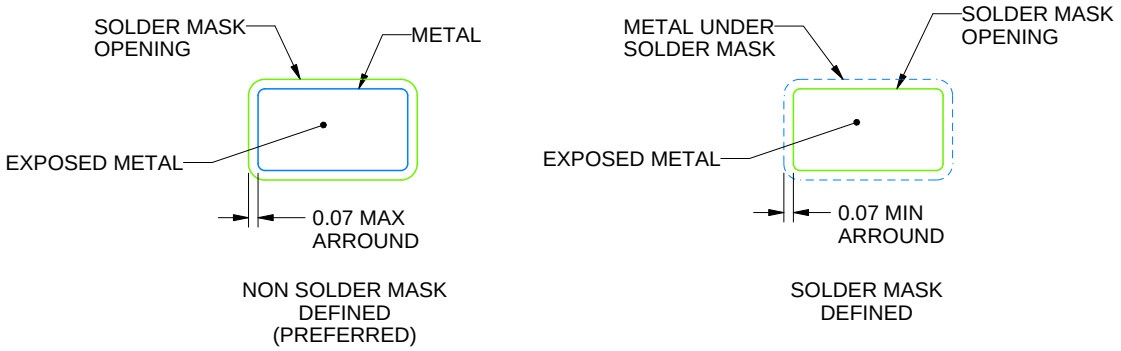

SOLDER MASK DETAILS

4214839/K 08/2024

NOTES: (continued)

6. Publication IPC-7351 may have alternate designs.
7. Solder mask tolerances between and around signal pads can vary based on board fabrication site.

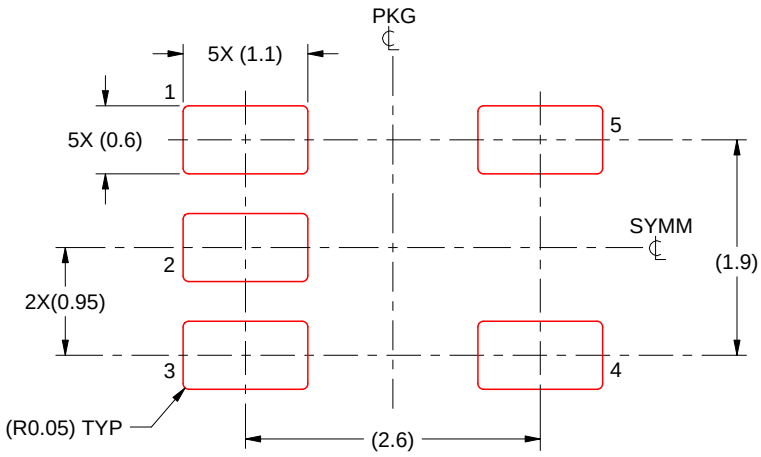

SOLDER PASTE EXAMPLE
BASED ON 0.125 mm THICK STENCIL
SCALE:15X

4214839/K 08/2024

NOTES: (continued)

8. Laser cutting apertures with trapezoidal walls and rounded corners may offer better paste release. IPC-7525 may have alternate design recommendations.
9. Board assembly site may have different recommendations for stencil design.

PACKAGE OUTLINE

DGK0008A

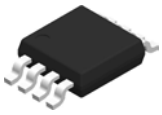

VSSOP - 1.1 mm max height

SMALL OUTLINE PACKAGE

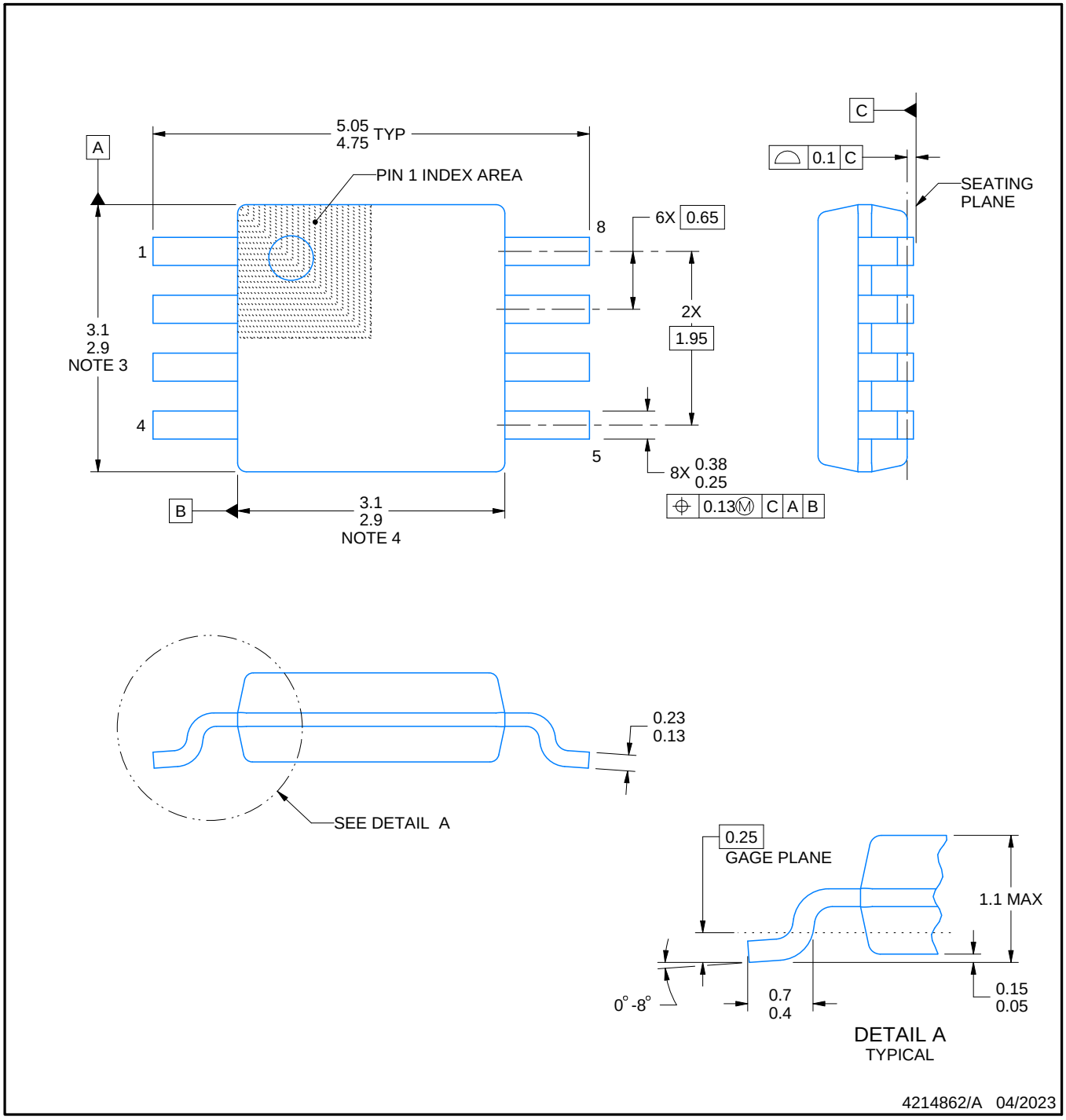

PowerPAD is a trademark of Texas Instruments.

NOTES:

1. All linear dimensions are in millimeters. Any dimensions in parenthesis are for reference only. Dimensioning and tolerancing per ASME Y14.5M.
2. This drawing is subject to change without notice.
3. This dimension does not include mold flash, protrusions, or gate burrs. Mold flash, protrusions, or gate burrs shall not exceed 0.15 mm per side.
4. This dimension does not include interlead flash. Interlead flash shall not exceed 0.25 mm per side.
5. Reference JEDEC registration MO-187.

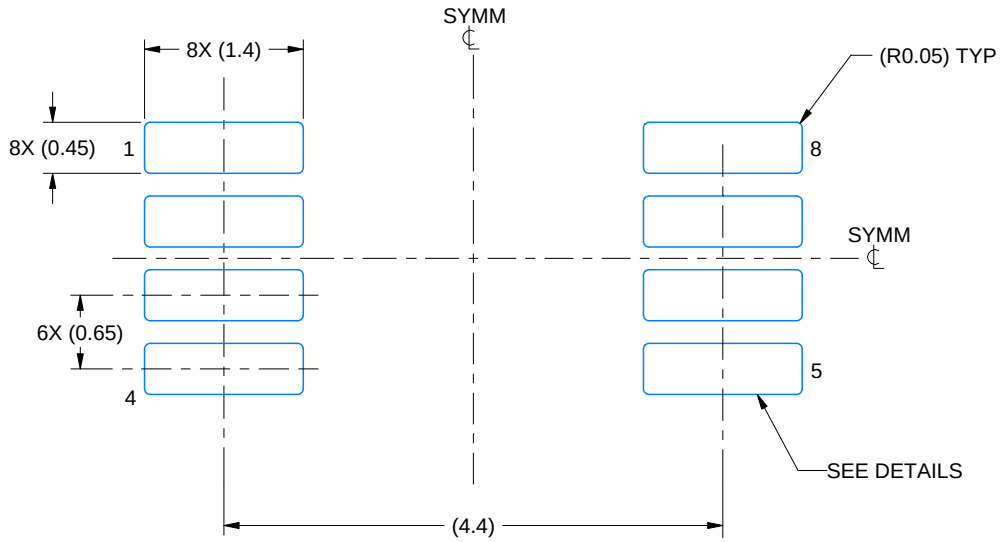

LAND PATTERN EXAMPLE
EXPOSED METAL SHOWN
SCALE: 15X

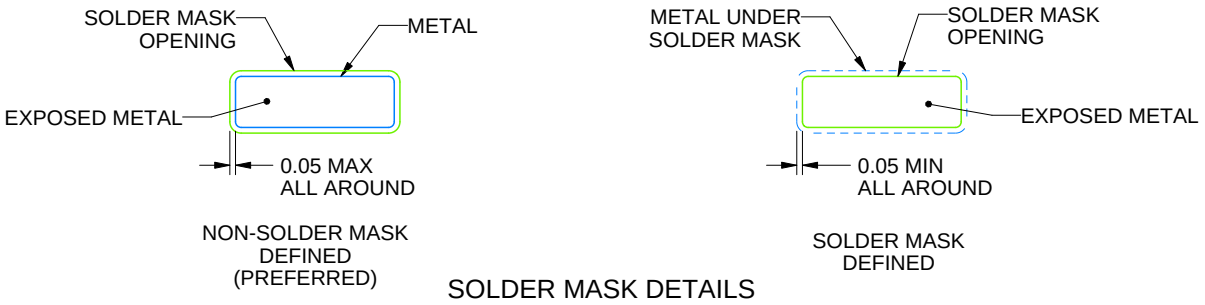

SOLDER MASK DETAILS

4214862/A 04/2023

NOTES: (continued)

6. Publication IPC-7351 may have alternate designs.
7. Solder mask tolerances between and around signal pads can vary based on board fabrication site.
8. Vias are optional depending on application, refer to device data sheet. If any vias are implemented, refer to their locations shown on this view. It is recommended that vias under paste be filled, plugged or tented.
9. Size of metal pad may vary due to creepage requirement.

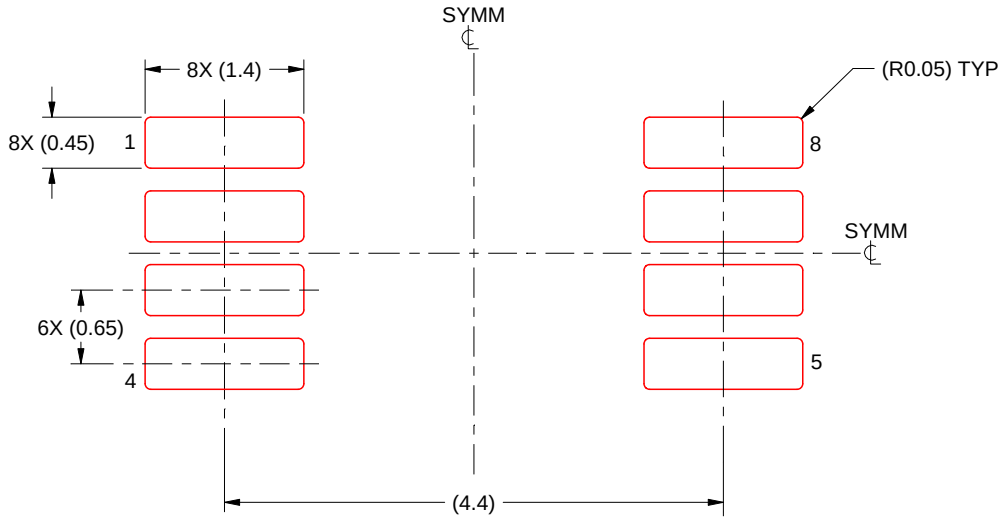

SOLDER PASTE EXAMPLE
SCALE: 15X

4214862/A 04/2023

NOTES: (continued)

11. Laser cutting apertures with trapezoidal walls and rounded corners may offer better paste release. IPC-7525 may have alternate design recommendations.
12. Board assembly site may have different recommendations for stencil design.

IMPORTANT NOTICE AND DISCLAIMER

TI PROVIDES TECHNICAL AND RELIABILITY DATA (INCLUDING DATA SHEETS), DESIGN RESOURCES (INCLUDING REFERENCE DESIGNS), APPLICATION OR OTHER DESIGN ADVICE, WEB TOOLS, SAFETY INFORMATION, AND OTHER RESOURCES “AS IS” AND WITH ALL FAULTS, AND DISCLAIMS ALL WARRANTIES, EXPRESS AND IMPLIED, INCLUDING WITHOUT LIMITATION ANY IMPLIED WARRANTIES OF MERCHANTABILITY, FITNESS FOR A PARTICULAR PURPOSE OR NON-INFRINGEMENT OF THIRD PARTY INTELLECTUAL PROPERTY RIGHTS.

These resources are intended for skilled developers designing with TI products. You are solely responsible for (1) selecting the appropriate TI products for your application, (2) designing, validating and testing your application, and (3) ensuring your application meets applicable standards, and any other safety, security, regulatory or other requirements.

These resources are subject to change without notice. TI grants you permission to use these resources only for development of an application that uses the TI products described in the resource. Other reproduction and display of these resources is prohibited. No license is granted to any other TI intellectual property right or to any third party intellectual property right. TI disclaims responsibility for, and you will fully indemnify TI and its representatives against, any claims, damages, costs, losses, and liabilities arising out of your use of these resources.

TI’s products are provided subject to TI’s Terms of Sale or other applicable terms available either on ti.com or provided in conjunction with such TI products. TI’s provision of these resources does not expand or otherwise alter TI’s applicable warranties or warranty disclaimers for TI products.

TI objects to and rejects any additional or different terms you may have proposed.

Mailing Address: Texas Instruments, Post Office Box 655303, Dallas, Texas 75265
Copyright © 2025, Texas Instruments Incorporated