LF156JAN JFET Input Operational Amplifiers

Check for Samples: LF156JAN

FEATURES

- **Advantages**
  - **Replace Expensive Hybrid and Module FET Op Amps**
  - **Rugged JFETs Allow Blow-Out Free Handling Compared with MOSFET Input Devices**
  - **Excellent for Low Noise Applications using either High or Low Source Impedance—Very Low 1/f Corner**
  - **Offset Adjust does not Degrade Drift or Common-Mode Rejection as in Most Monolithic Amplifiers**
  - **New Output Stage Allows use of Large Capacitive Loads (5,000 pF) without Stability Problems**
  - **Internal Compensation and Large Differential Input Voltage Capability**

APPLICATIONS

- **Precision High Speed Integrators**
- **Fast D/A and A/D Converters**
- **High Impedance Buffers**
- **Wideband, Low Noise, Low Drift Amplifiers**
- **Logarithmic Amplifiers**
- **Photocell Amplifiers**
- **Sample and Hold Circuits**

COMMON FEATURES

- **Low Input Bias Current: 30pA**
- **Low Input Offset Current: 3pA**
- **High Input Impedance: $10^{12}\Omega$**
- **Low Input Noise Current: 0.01 pA / $\sqrt{Hz}$**
- **High Common-Mode Rejection Ratio: 100 dB**
- **Large DC Voltage Gain: 106 dB**

UNCOMMON FEATURES

- **Extremely Fast Settling Time to 0.01% 1.5μs**
- **Fast Slew Rate 12V/μs**
- **Wide Gain Bandwidth 5MHz**
- **Low Input Noise Voltage 12 nV / $\sqrt{Hz}$**

DESCRIPTION

This is the first monolithic JFET input operational amplifier to incorporate well matched, high voltage JFETs on the same chip with standard bipolar transistors (BI-FET™ Technology). This amplifier features low input bias and offset currents/low offset voltage and offset voltage drift, coupled with offset adjust which does not degrade drift or common-mode rejection. The device is also designed for high slew rate, wide bandwidth, extremely fast settling time, low voltage and current noise and a low 1/*f* noise corner.

Connection Diagrams

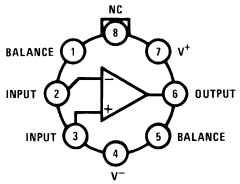

Figure 1. Top View
Metal Can Package (LMC)
See Package LMC0008C

Please be aware that an important notice concerning availability, standard warranty, and use in critical applications of Texas Instruments semiconductor products and disclaimers thereto appears at the end of this data sheet.

All trademarks are the property of their respective owners.

PRODUCTION DATA information is current as of publication date. Products conform to specifications per the terms of the Texas Instruments standard warranty. Production processing does not necessarily include testing of all parameters.

Copyright © 2006–2013, Texas Instruments Incorporated

Simplified Schematic

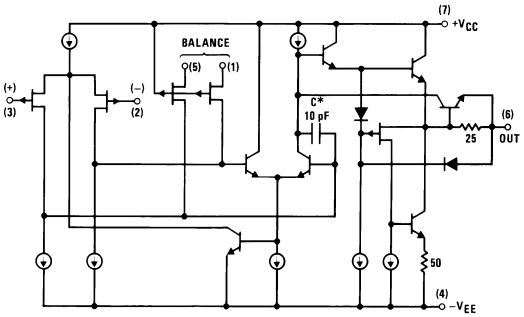

*3pF in LF357 series.

Detailed Schematic

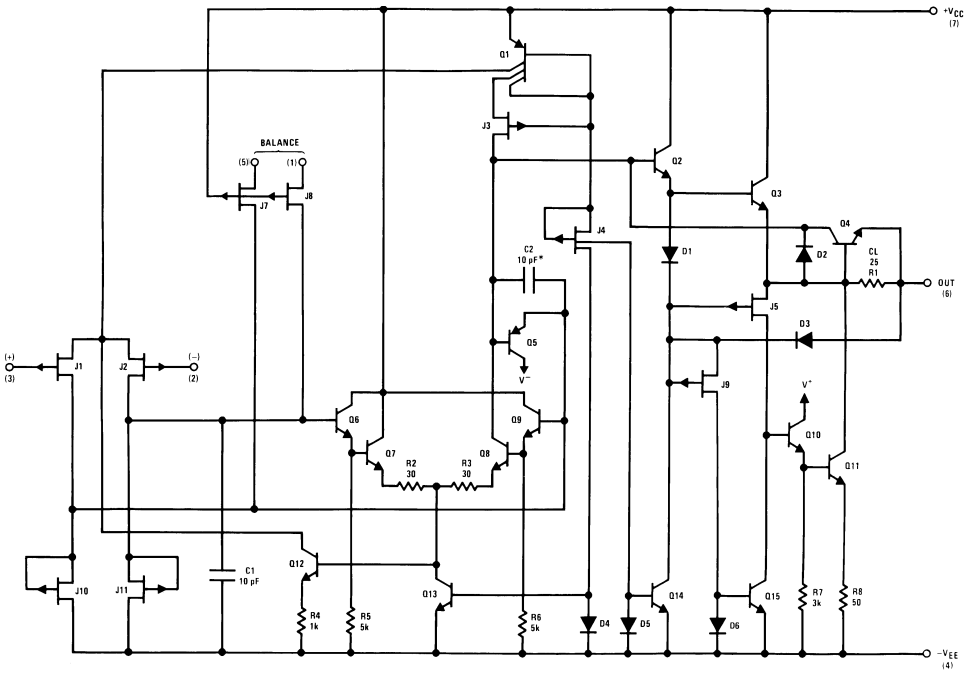

*C = 3pF in LF357 series.

These devices have limited built-in ESD protection. The leads should be shorted together or the device placed in conductive foam during storage or handling to prevent electrostatic damage to the MOS gates.

Copyright © 2006–2013, Texas Instruments Incorporated

Absolute Maximum Ratings[1]

Supply Voltage			±22V
Differential Input Voltage			±40V
Input Voltage Range[2]			±20V
Output Short Circuit Duration[3]			Continuous
T_{JMAX}			175°C
Power Dissipation at T_A = 25°C[4]	Still Air		560 mW
	500 LF/Min Air Flow		1200 mW
Thermal Resistance	θ_{JA}	Still Air	160°C/W
		400 LF/Min Air Flow	65°C/W
	θ_{JC}		23°C/W
Storage Temperature Range			−65°C ≤ T_A ≤ +150°C
Lead Temperature (Soldering 10 sec.)			300°C
ESD tolerance [5]			1200V

(1) Absolute Maximum Ratings indicate limits beyond which damage to the device may occur. Operating Ratings indicate condition for which the device is functional, but do not ensure specific performance limits . For specified specifications and test conditions, see the Electrical Characteristics. The ensured specifications apply only for the test conditions listed. Some performance characteristics may degrade when the device is not operated under the listed test conditions.
(2) The absolute maximum negative input voltage is equal to the negative power supply voltage.
(3) Short circuit may be to ground or either supply. Rating applies to +125°C case temperature or +75°C ambient temperature.
(4) The maximum power dissipation must be derated at elevated temperatures and is dictated by T_{Jmax}(maximum junction temperature), θ_{JA}(package junction to ambient thermal resistance), and T_A (ambient temperature). The maximum allowable power dissipation at any temperature is $P_D=(T_{Jmax}-T_A)/\theta_{JA}$ or the number given in the Absolute Maximum Ratings, whichever is lower.
(5) Human body model, 100pF discharged through 1.5KΩ.

Recommended Operating Conditions

Supply voltage range	±5 to ±20 V_{DC}
Ambient temperature range	−55°C ≤ T_A ≤ +125°C

Quality Conformance Inspection

MIL-STD-883, Method 5005 - Group A

Subgroup	Description	Temp (C)
1	Static tests at	+25
2	Static tests at	+125
3	Static tests at	-55
4	Dynamic tests at	+25
5	Dynamic tests at	+125
6	Dynamic tests at	-55
7	Functional tests at	+25
8A	Functional tests at	+125
8B	Functional tests at	-55
9	Switching tests at	+25
10	Switching tests at	+125
11	Switching tests at	-55
12	Settling time at	+25

Copyright © 2006–2013, Texas Instruments Incorporated

LF156 Electrical Characteristics DC Parameters

The following conditions apply, unless otherwise specified.
DC: V_{CC} = ±20V, V_{CM} = 0V

Symbol	Parameter	Conditions	Notes	Min	Max	Unit	Sub-groups
I_{CC}	Supply Current	$+V_{CC}$ = 15V, $-V_{CC}$ = -15V			7.0	mA	1
					6.0	mA	2
					11	mA	3
V_{IO}	Input Offset Voltage	$+V_{CC}$ = 5V, $-V_{CC}$ = -35V, V_{CM} = 15V		-5.0	5.0	mV	1
				-7.0	7.0	mV	2, 3
		$+V_{CC}$ = 35V, $-V_{CC}$ = -5V, V_{CM} = -15V		-5.0	5.0	mV	1
				-7.0	7.0	mV	2, 3
				-5.0	5.0	mV	1
				-7.0	7.0	mV	2, 3
		$+V_{CC}$ = 5V, $-V_{CC}$ = -5V		-5.0	5.0	mV	1
				-7.0	7.0	mV	2, 3
$\pm I_{IB}$	Input Bias Current	$+V_{CC}$ = 5V, $-V_{CC}$ = -35V, V_{CM} = 15V		-0.1	3.5	nA	1
				-10	60	nA	2
		$+V_{CC}$ = 35V, $-V_{CC}$ = -5V, V_{CM} = -15V		-0.1	0.1	nA	1
				-10	50	nA	2
				-0.1	0.1	nA	1
				-10	50	nA	2
		$+V_{CC}$ = 5V, $-V_{CC}$ = -25V, V_{CM} = 10V		-0.1	0.3	nA	1
				-10	50	nA	2
I_{IO}	Input Offset Current			-0.02	0.02	nA	1
				-20	+20	nA	2
+PSRR	Power Supply Rejection Ratio	$+V_{CC}$ = 10V, $-V_{CC}$ = -20V		85		dB	1, 2, 3
-PSRR	Power Supply Rejection Ratio	$+V_{CC}$ = 20V, $-V_{CC}$ = -10V		85		dB	1, 2, 3
CMR	Input Voltage Common Mode Rejection	V_{CM} = -15V to 15V		85		dB	1, 2, 3
$V_{IOAdj}(+)$	Adjustment for Input Offset Voltage			8.0		mV	1, 2, 3
$V_{IOAdj}(-)$	Adjustment for Input Offset Voltage				-8.0	mV	1, 2, 3
$+I_{OS}$	Output Short Circuit Current (For Positive Output)	$+V_{CC}$ = 15V, $-V_{CC}$ = -15V, t ≤ 25mS		-50		mA	1, 2, 3
$-I_{OS}$	Output Short Circuit Current (For Negative Output)	$+V_{CC}$ = 15V, $-V_{CC}$ = -15V, t ≤ 25mS			50	mA	1, 2, 3
$\Delta V_{IO}/\Delta T$	Temperature Coefficient of Input Offset Voltage	25°C ≤ T_A ≤ +125°C	See (1)	-30	30	μV/°C	2
		-55°C ≤ T_A ≤ 25°C	See (1)	-30	30	μV/°C	3
$-A_{VS}$	Open Loop Voltage Gain (Single Ended)	V_O = -15V, R_L = 2KΩ	See (2)	50		V/mV	4
			See (2)	25		V/mV	5, 6
$+A_{VS}$	Open Loop Voltage Gain (Single Ended)	V_O = +15V, R_L = 2KΩ	See (2)	50		V/mV	4
			See (2)	25		V/mV	5, 6
A_{VS}	Open Loop Voltage Gain (Single Ended)	V_{CC} = ±5V, V_O = ±2V, R_L = 2KΩ	See (2)	10		V/mV	4, 5, 6
$-V_{OP}$	Output Voltage Swing	V_{CM} = 20V, R_L = 10KΩ			-16	V	4, 5, 6
		V_{CM} = 20V, R_L = 2KΩ			-15	V	4, 5, 6
$+V_{OP}$	Output Voltage Swing	V_{CM} = -20V, R_L = 10KΩ		16		V	4, 5, 6
		V_{CM} = -20V, R_L = 2KΩ		15		V	4, 5, 6

(1) Calculated parameter.
(2) Datalog Reading in K = V/mV.

Copyright © 2006–2013, Texas Instruments Incorporated

LF156 Electrical Characteristics AC Parameters

The following conditions apply, unless otherwise specified.
AC: V_{CC} = ±15V, V_{CM} = 0V

Symbol	Parameter	Conditions	Notes	Min	Max	Unit	Sub-groups
-SR	Slew Rate Fall	V_I = 5V to -5V, A_V = 1		7.5		V/µS	7
				5		V/µS	8A, 8B
+SR	Slew Rate Rise	V_I = -5V to 5V, A_V = 1		7.5		V/µS	7
				5		V/µS	8A, 8B
TR_{TR}	Transient Response Rise Time	R_L = 2KΩ, C_L= 100pF, V_I = 50mV, A_V = 1			100	nS	7, 8A, 8B
TR_{OS}	Transient Response Overshoot	R_L = 2KΩ, C_L = 100pF, V_I = 50mV, A_V = 1			40	%	7, 8A, 8B
NI_{BB}	Noise Broad Band	BW = 5KHz, V_{CC} = ±20V			10	$µV_{RMS}$	7
NI_{PC}	Noise Popcorn	BW = 5KHz, V_{CC} = ±20V			40	$µV_{PK}$	7
tS (+)	Settling Time	A_V = -1			1500	nS	12
tS (-)	Settling Time	A_V = -1			1500	nS	12

LF156 Electrical Characteristics Drift Values

The following conditions apply, unless otherwise specified.
AC: V_{CC} = ±20V, V_{CM} = 0V
Delta calculations performed on JAN S devices at group B, subgroup 5 only

Symbol	Parameter	Conditions	Notes	Min	Max	Unit	Sub-groups
V_{IO}	Input Offset Voltage			-1.0	1.0	mV	1
$±I_{IB}$	Input Bias Current			-0.05	0.05	nA	1

Copyright © 2006–2013, Texas Instruments Incorporated

Typical DC Performance Characteristics

Input Bias Current

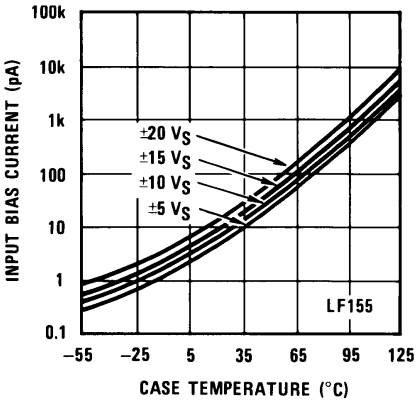

Figure 2.

Input Bias Current

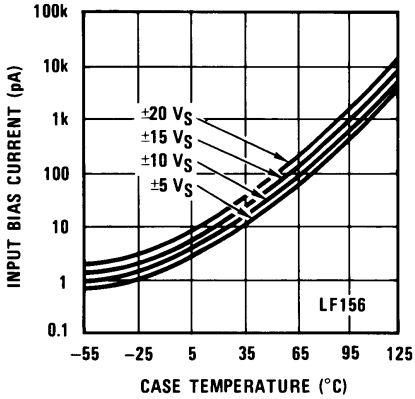

Figure 3.

Input Bias Current

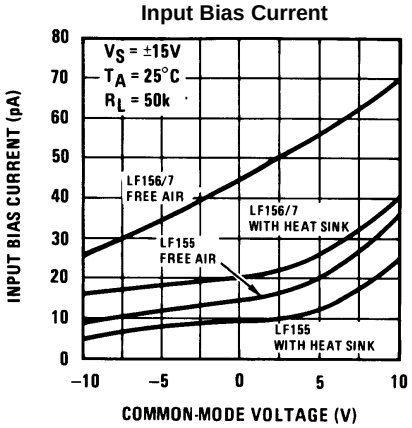

Figure 4.

Voltage Swing

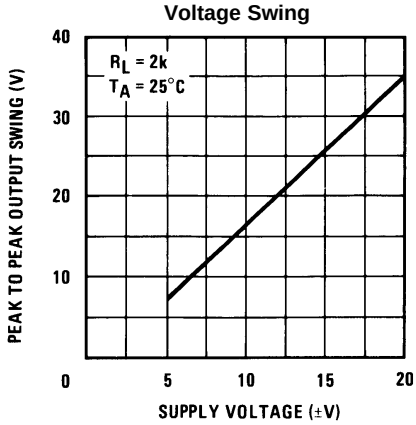

Figure 5.

Supply Current

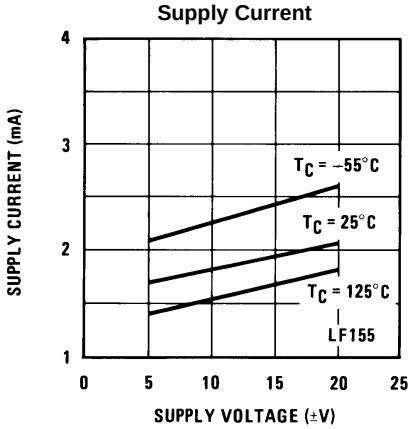

Figure 6.

Supply Current

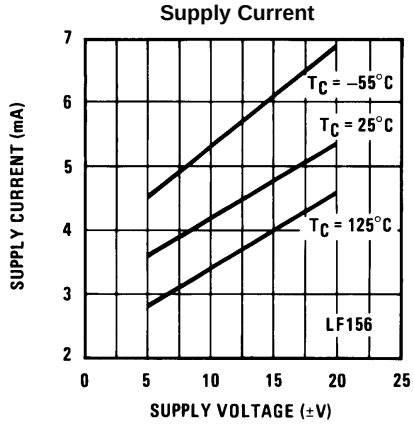

Figure 7.

Copyright © 2006–2013, Texas Instruments Incorporated

Typical DC Performance Characteristics (continued)

Negative Current Limit

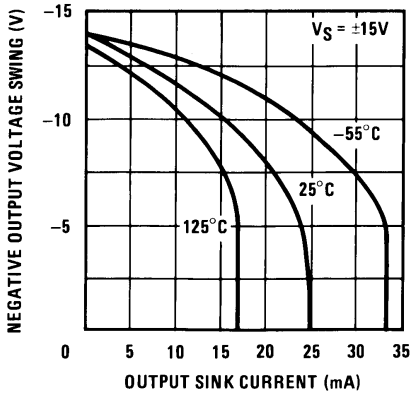

Figure 8.

Positive Current Limit

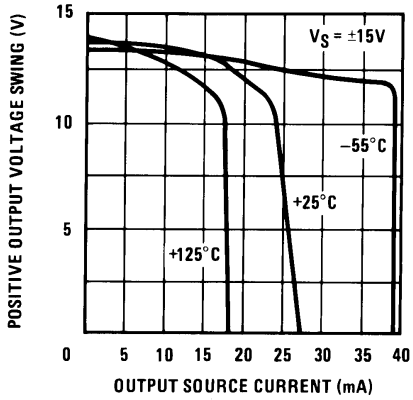

Figure 9.

Positive Common-Mode Input Voltage Limit

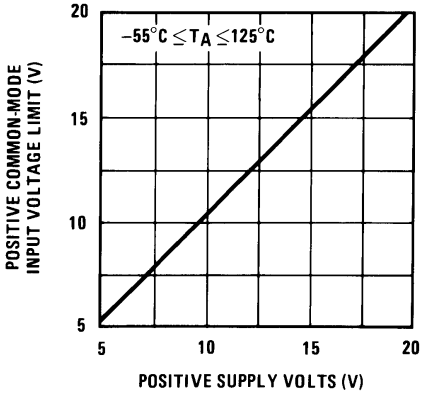

Figure 10.

Negative Common-Mode Input Voltage Limit

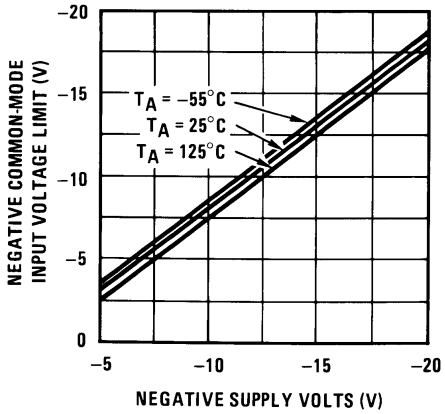

Figure 11.

Open Loop Voltage Gain

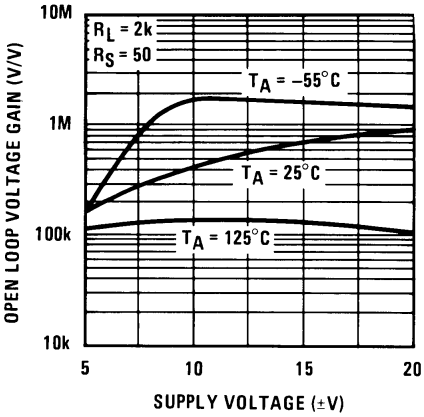

Figure 12.

Output Voltage Swing

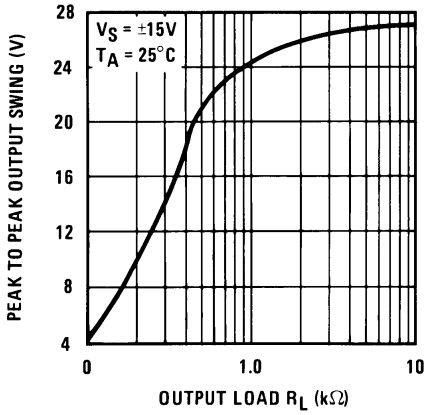

Figure 13.

Typical AC Performance Characteristics

Gain Bandwidth

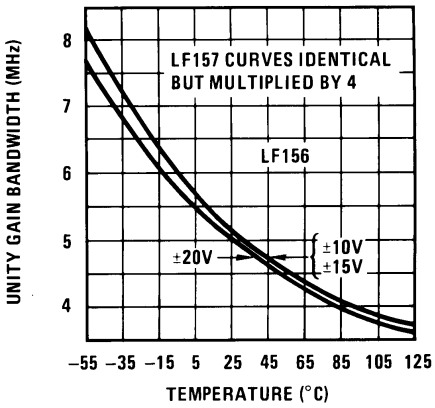

Figure 14.

Normalized Slew Rate

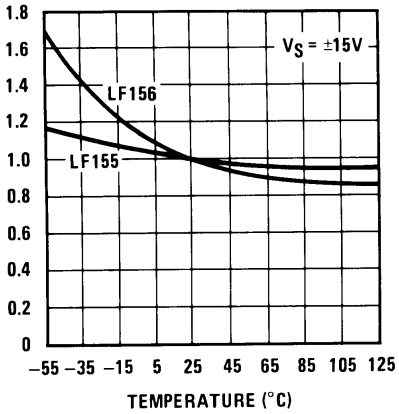

Figure 15.

Output Impedance

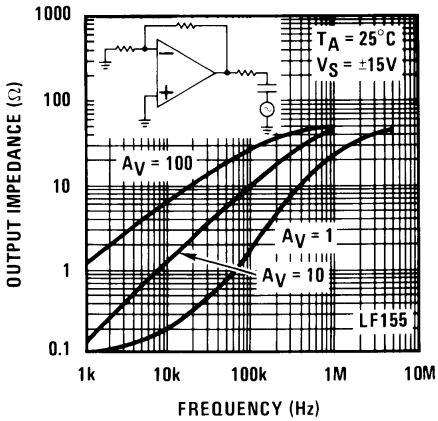

Figure 16.

Output Impedance

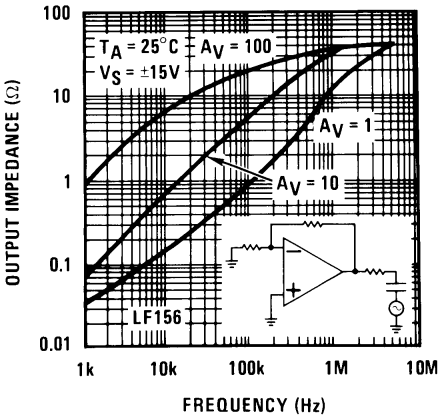

Figure 17.

LF156 Small Signal Pulse Response, A_V = +1

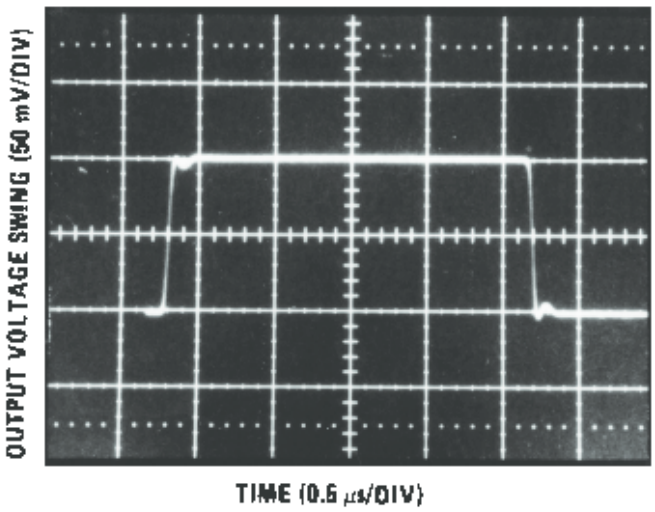

Figure 18.

LF156 Large Signal Puls Response, A_V = +1

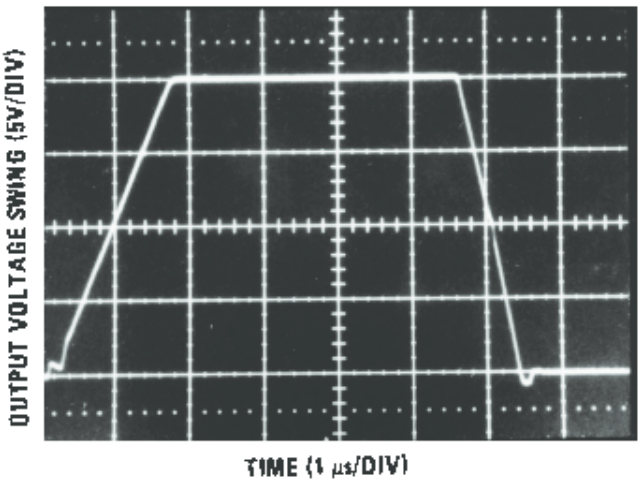

Figure 19.

Copyright © 2006–2013, Texas Instruments Incorporated

Typical AC Performance Characteristics (continued)

Inverter Settling Time

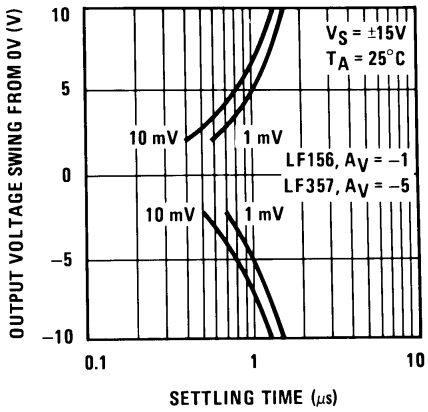

Figure 20.

Open Loop Frequency Response

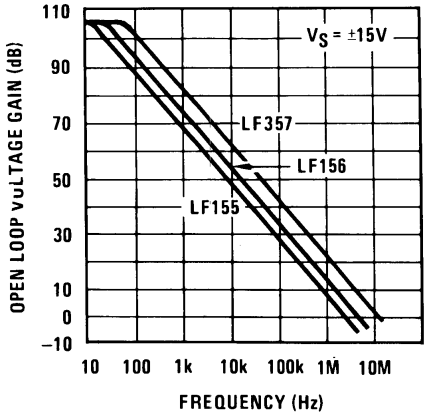

Figure 21.

Bode Plot

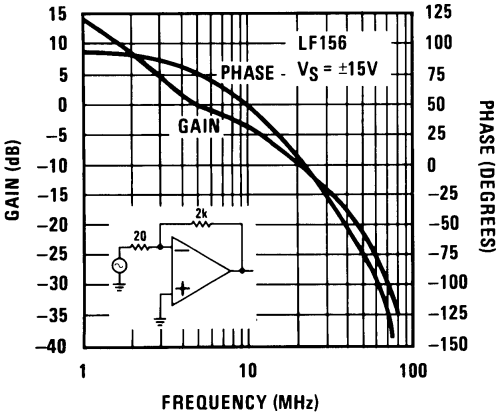

Figure 22.

Common-Mode Rejection Ratio

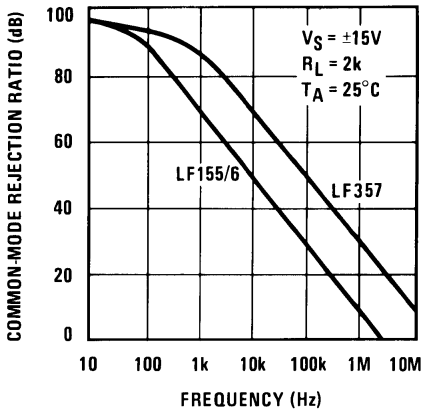

Figure 23.

Power Supply Rejection Ratio

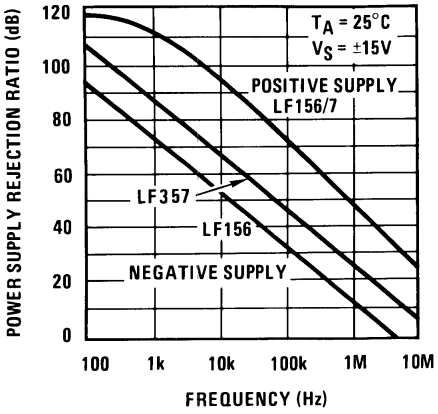

Figure 24.

Undistorted Output Voltage Swing

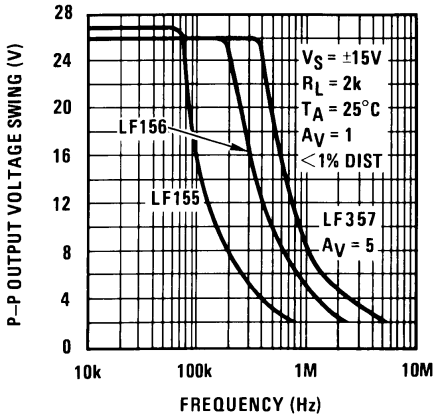

Figure 25.

Typical AC Performance Characteristics (continued)

Equivalent Input Noise Voltage

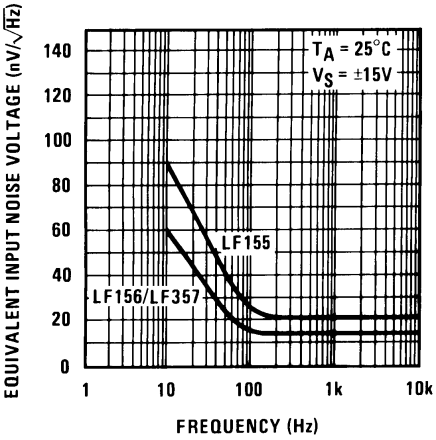

Figure 26.

Equivalent Input Noise Voltage (Expanded Scale)

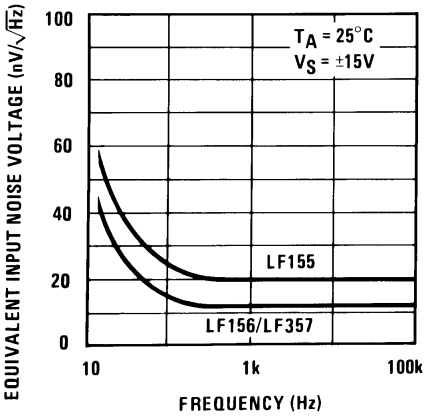

Figure 27.

Copyright © 2006–2013, Texas Instruments Incorporated

APPLICATION HINTS

These are op amps with JFET input devices. These JFETs have large reverse breakdown voltages from gate to source and drain eliminating the need for clamps across the inputs. Therefore large differential input voltages can easily be accommodated without a large increase in input current. The maximum differential input voltage is independent of the supply voltages. However, neither of the input voltages should be allowed to exceed the negative supply as this will cause large currents to flow which can result in a destroyed unit.

Exceeding the negative common-mode limit on either input will force the output to a high state, potentially causing a reversal of phase to the output. Exceeding the negative common-mode limit on both inputs will force the amplifier output to a high state. In neither case does a latch occur since raising the input back within the common-mode range again puts the input stage and thus the amplifier in a normal operating mode.

Exceeding the positive common-mode limit on a single input will not change the phase of the output however, if both inputs exceed the limit, the output of the amplifier will be forced to a high state.

These amplifiers will operate with the common-mode input voltage equal to the positive supply. In fact, the common-mode voltage can exceed the positive supply by approximately 100 mV independent of supply voltage and over the full operating temperature range. The positive supply can therefore be used as a reference on an input as, for example, in a supply current monitor and/or limiter.

Precautions should be taken to ensure that the power supply for the integrated circuit never becomes reversed in polarity or that the unit is not inadvertently installed backwards in a socket as an unlimited current surge through the resulting forward diode within the IC could cause fusing of the internal conductors and result in a destroyed unit.

All of the bias currents in these amplifiers are set by FET current sources. The drain currents for the amplifiers are therefore essentially independent of supply voltage.

As with most amplifiers, care should be taken with lead dress, component placement and supply decoupling in order to ensure stability. For example, resistors from the output to an input should be placed with the body close to the input to minimize “pickup” and maximize the frequency of the feedback pole by minimizing the capacitance from the input to ground.

A feedback pole is created when the feedback around any amplifier is resistive. The parallel resistance and capacitance from the input of the device (usually the inverting input) to AC ground set the frequency of the pole. In many instances the frequency of this pole is much greater than the expected 3dB frequency of the closed loop gain and consequently there is negligible effect on stability margin. However, if the feedback pole is less than approximately six times the expected 3 dB frequency a lead capacitor should be placed from the output to the input of the op amp. The value of the added capacitor should be such that the RC time constant of this capacitor and the resistance it parallels is greater than or equal to the original feedback pole time constant.

Typical Circuit Connections

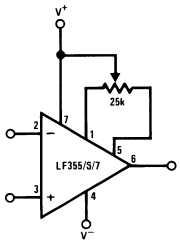

Figure 28. V_{OS} Adjustment

- V_{OS} is adjusted with a 25k potentiometer
- The potentiometer wiper is connected to V^+
- For potentiometers with temperature coefficient of 100 ppm/°C or less the additional drift with adjust is ≈ 0.5μV/°C/mV of adjustment
- Typical overall drift: 5μV/°C ±(0.5μV/°C/mV of adj.)

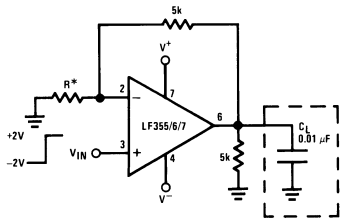

Figure 29. Driving Capacitive Loads

* LF156 R = 5k
Due to a unique output stage design, these amplifiers have the ability to drive large capacitive loads and still maintain stability. $C_{L(MAX)} \cong 0.01\mu F$.
Overshoot ≤ 20%
Settling time (t_S) ≅ 5µs

Typical Applications

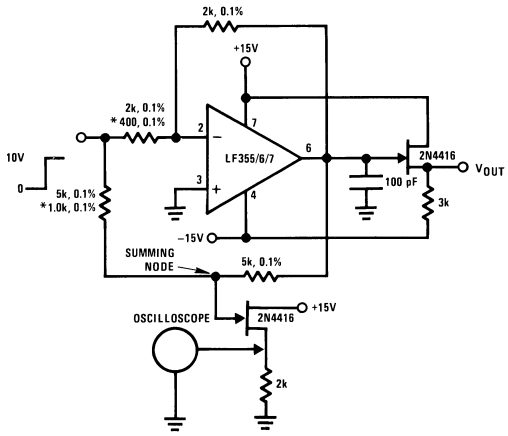

Figure 30. Settling Time Test Circuit

- Settling time is tested with the LF156 connected as unity gain inverter.
- FET used to isolate the probe capacitance
- Output = 10V step

Copyright © 2006–2013, Texas Instruments Incorporated

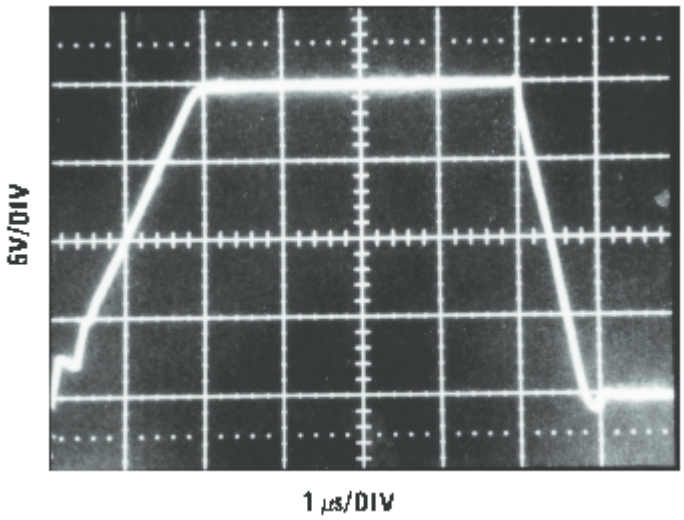

Figure 31. Large Signal Inverter Output, V_{OUT} (from Settling Time Circuit) LF356

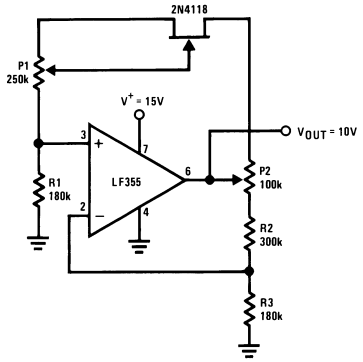

Figure 32. Low Drift Adjustable Voltage Reference

- $\Delta V_{OUT}/\Delta T = \pm 0.002\%/°C$
- All resistors and potentiometers should be wire-wound
- P1: drift adjust
- P2: V_{OUT} adjust

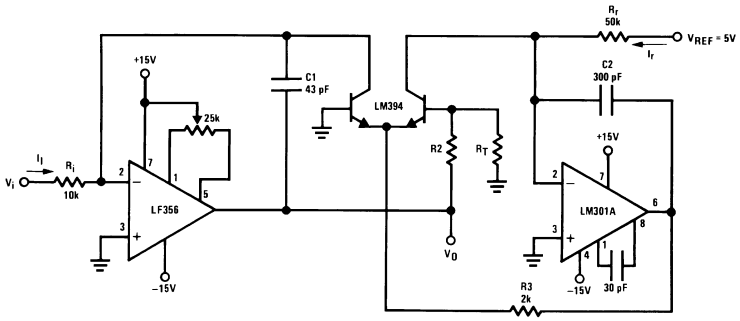

Figure 33. Fast Logarithmic Converter

- Dynamic range: 100μA ≤ I_i ≤ 1mA (5 decades), $|V_O|$ = 1V/decade
- Transient response: 3μs for ΔI_i = 1 decade

- C1, C2, R2, R3: added dynamic compensation
- V_{OS} adjust the LF156 to minimize quiescent error
- R_T: Tel Labs type Q81 + 0.3%/°C

$$|V_{OUT}| = \left[1 + \frac{R2}{R_T}\right] \frac{kT}{q} \text{ in } V_i \left[\frac{R_r}{V_{REF}\ R_i}\right] = \log V_i \frac{1}{R_i I_r} \quad R2 = 15.7k,\ R_T = 1k,\ 0.3\%/°C \text{ (for temperature compensation)} \tag{1}$$

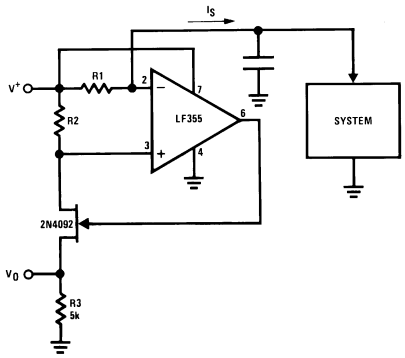

Figure 34. Precision Current Monitor

- V_O = 5 R1/R2 (V/mA of I_S)
- R1, R2, R3: 0.1% resistors

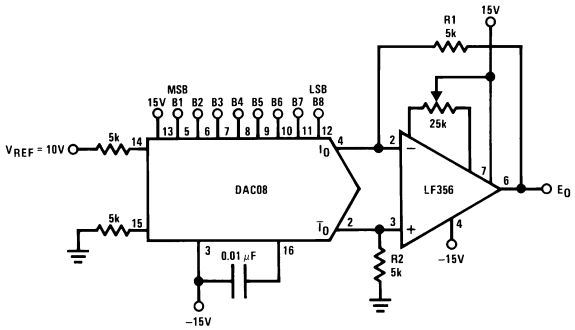

Figure 35. 8-Bit D/A Converter with Symmetrical Offset Binary Operation

- R1, R2 should be matched within ±0.05%
- Full-scale response time: 3μs

E_O	B1	B2	B3	B4	B5	B6	B7	B8	Comments
+9.920	1	1	1	1	1	1	1	1	Positive Full-Scale
+0.040	1	0	0	0	0	0	0	0	(+) Zero-Scale
−0.040	0	1	1	1	1	1	1	1	(−) Zero-Scale
−9.920	0	0	0	0	0	0	0	0	Negative Full-Scale

Copyright © 2006–2013, Texas Instruments Incorporated

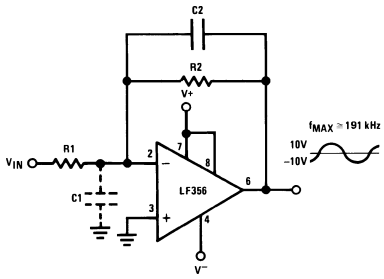

- Power BW: $f_{MAX} = \frac{S_r}{2\pi V_P} \cong 191\,kHz$

Figure 36. Wide BW Low Noise, Low Drift Amplifier

- Parasitic input capacitance C1 ≃ 3pF interacts with feedback elements and creates undesirable high frequency pole. To compensate add C2 such that: R2 C2 ≃ R1 C1.

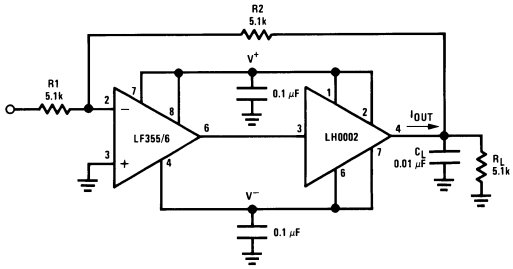

Figure 37. Boosting the LF156 with a Current Amplifier

- $I_{OUT(MAX)}$≃150mA (will drive R_L≥ 100Ω)
- $\frac{\Delta V_{OUT}}{\Delta T} = \frac{0.15}{10^{-2}}\ V/\mu s$ (with C_L shown)
- No additional phase shift added by the current amplifier

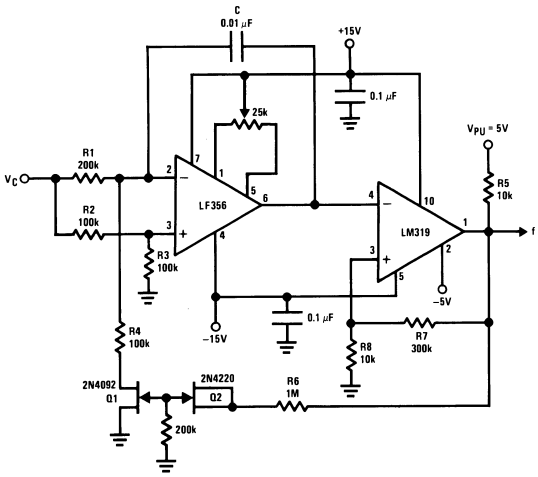

$$f = \frac{V_C\,(R8 + R7)}{(8\ V_{PU}\ R8\ R1)\ C'} \quad 0 \le V_C \le 30V,\ 10\,Hz \le f \le 10\,kHz$$

R1, R4 matched. Linearity 0.1% over 2 decades.

Figure 38. 3 Decades VCO

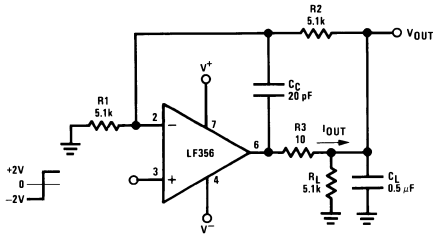

Figure 39. Isolating Large Capacitive Loads

- Overshoot 6%
- t_s 10µs
- When driving large C_L, the V_{OUT} slew rate determined by C_L and $I_{OUT(MAX)}$:

$$\frac{\Delta V_{OUT}}{\Delta T} = \frac{I_{OUT}}{C_L} \cong \frac{0.02}{0.5}\ V/\mu s = 0.04\ V/\mu s\ (\text{with } C_L \text{ shown}) \tag{2}$$

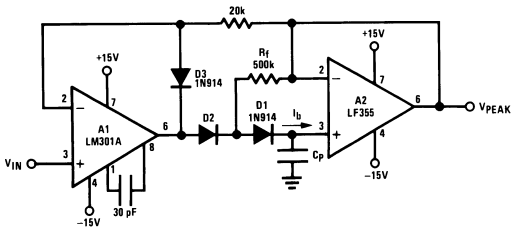

Figure 40. Low Drift Peak Detector

- By adding D1 and R_f, V_{D1}=0 during hold mode. Leakage of D2 provided by feedback path through R_f.
- Leakage of circuit is essentially I_b plus capacitor leakage of Cp.
- Diode D3 clamps V_{OUT} (A1) to $V_{IN}-V_{D3}$ to improve speed and to limit reverse bias of D2.
- Maximum input frequency should be << $\frac{1}{2}\pi R_f C_{D2}$ where C_{D2} is the shunt capacitance of D2.

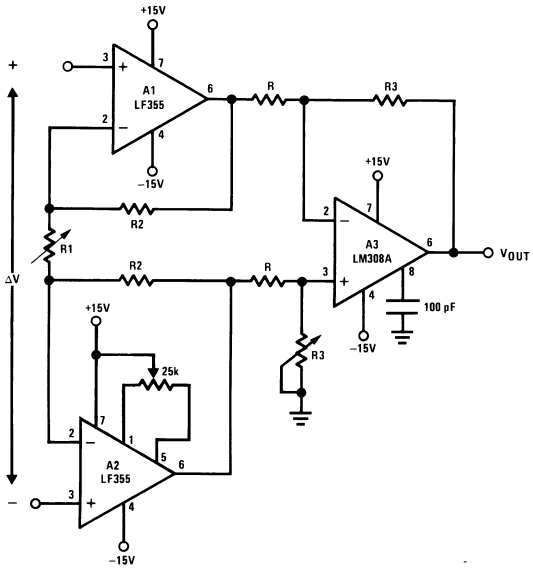

- $V_{OUT} = \frac{R3}{R}\left[\frac{2R2}{R1} + 1\right]\Delta V,\ V^- + 2V \le V_{IN}\ \text{common-mode} \le V^+$

Figure 41. High Impedance, Low Drift Instrumentation Amplifier

- System V_{OS} adjusted via A2 V_{OS} adjust

Copyright © 2006–2013, Texas Instruments Incorporated

- Trim R3 to boost up CMRR to 120 dB. Instrumentation amplifier resistor array recommended for best accuracy and lowest drift

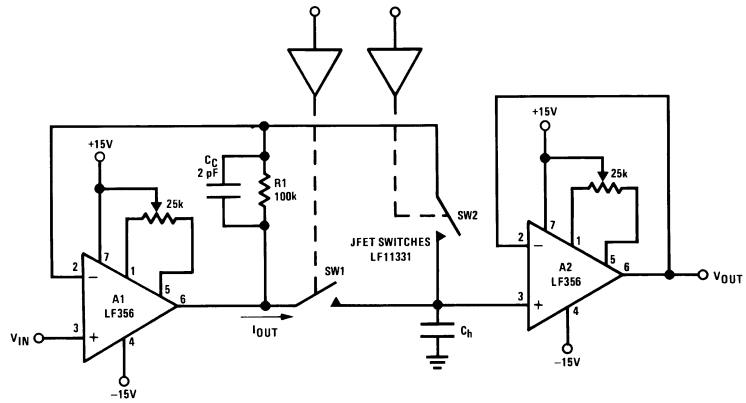

Figure 42. Fast Sample and Hold

- Both amplifiers (A1, A2) have feedback loops individually closed with stable responses (overshoot negligible)
- Acquisition time T_A, estimated by:

$$T_A \cong \left[\frac{2R_{ON},\ V_{IN},\ C_h}{S_r}\right] 1/2 \text{ provided that:}$$

$$V_{IN} < 2\pi S_r R_{ON} C_h \text{ and } T_A > \frac{V_{IN} C_h}{I_{OUT(MAX)}},\ R_{ON} \text{ is of SW1}$$

$$\text{If inequality not satisfied: } T_A \cong \frac{V_{IN} C_h}{20\ \text{mA}} \tag{3}$$

- LF156 develops full S_r output capability for $V_{IN} \geq 1V$
- Addition of SW2 improves accuracy by putting the voltage drop across SW1 inside the feedback loop
- Overall accuracy of system determined by the accuracy of both amplifiers, A1 and A2

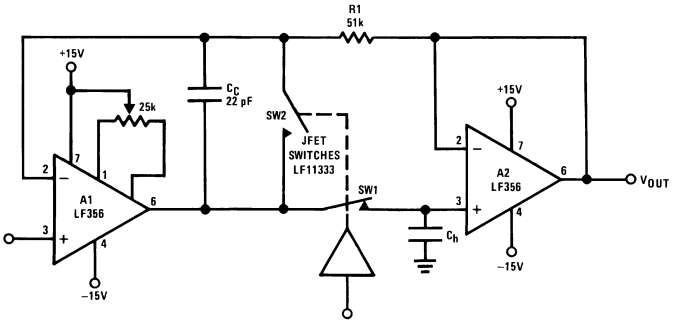

Figure 43. High Accuracy Sample and Hold

- By closing the loop through A2, the V_{OUT} accuracy will be determined uniquely by A1.
  - No V_{OS} adjust required for A2.
- T_A can be estimated by same considerations as previously but, because of the added
  - propagation delay in the feedback loop (A2) the overshoot is not negligible.
- Overall system slower than fast sample and hold
- R1, C_C: additional compensation
- Use LF156 for
  - Fast settling time
  - Low V_{OS}

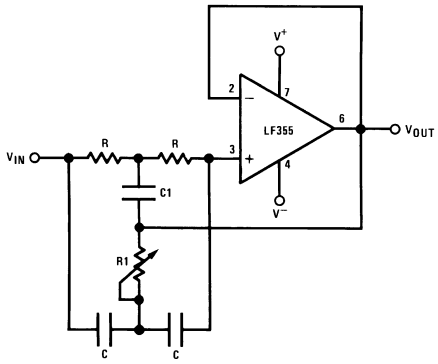

Figure 44. High Q Notch Filter

- 2R1 = R = 10MΩ
  - 2C = C1 = 300pF
- Capacitors should be matched to obtain high Q
- f_{NOTCH} = 120 Hz, notch = −55 dB, Q > 100
- Use LF155 for
  - Low I_B
  - Low supply current

Copyright © 2006–2013, Texas Instruments Incorporated

REVISION HISTORY

Date Released	Revision	Section	Originator	Changes
03/10/06	A	New Released, Corporate format.	R. Malone	New Release, Corporate format 1 MDS data sheet converted into a Corp. data sheet format. Following MDS data sheet will be Archived MJLF156-X, Rev. 0A0.
03/25/13	A	All	-	Changed layout of National Data Sheet to TI format.

Copyright © 2006–2013, Texas Instruments Incorporated

PACKAGING INFORMATION

Orderable part number	Status (1)	Material type (2)	Package | Pins	Package qty | Carrier	RoHS (3)	Lead finish/ Ball material (4)	MSL rating/ Peak reflow (5)	Op temp (°C)	Part marking (6)
JL156BGA	Active	Production	TO-99 (LMC) | 8	20 | JEDEC TRAY (5+1)	Yes	Call TI	Level-1-NA-UNLIM	-55 to 125	JL156BGA JM38510/11402BGA Q ACO JM38510/11402BGA Q >T
JM38510/11402BGA	Active	Production	TO-99 (LMC) | 8	20 | JEDEC TRAY (5+1)	Yes	Call TI	Level-1-NA-UNLIM	-55 to 125	JL156BGA JM38510/11402BGA Q ACO JM38510/11402BGA Q >T
M38510/11402BGA	Active	Production	TO-99 (LMC) | 8	20 | JEDEC TRAY (5+1)	Yes	Call TI	Level-1-NA-UNLIM	-55 to 125	JL156BGA JM38510/11402BGA Q ACO JM38510/11402BGA Q >T

(1) **Status:** For more details on status, see our product life cycle.

(2) **Material type:** When designated, preproduction parts are prototypes/experimental devices, and are not yet approved or released for full production. Testing and final process, including without limitation quality assurance, reliability performance testing, and/or process qualification, may not yet be complete, and this item is subject to further changes or possible discontinuation. If available for ordering, purchases will be subject to an additional waiver at checkout, and are intended for early internal evaluation purposes only. These items are sold without warranties of any kind.

(3) **RoHS values:** Yes, No, RoHS Exempt. See the TI RoHS Statement for additional information and value definition.

(4) **Lead finish/Ball material:** Parts may have multiple material finish options. Finish options are separated by a vertical ruled line. Lead finish/Ball material values may wrap to two lines if the finish value exceeds the maximum column width.

(5) **MSL rating/Peak reflow:** The moisture sensitivity level ratings and peak solder (reflow) temperatures. In the event that a part has multiple moisture sensitivity ratings, only the lowest level per JEDEC standards is shown. Refer to the shipping label for the actual reflow temperature that will be used to mount the part to the printed circuit board.

(6) **Part marking:** There may be an additional marking, which relates to the logo, the lot trace code information, or the environmental category of the part.

Multiple part markings will be inside parentheses. Only one part marking contained in parentheses and separated by a "~" will appear on a part. If a line is indented then it is a continuation of the previous line and the two combined represent the entire part marking for that device.

Important Information and Disclaimer: The information provided on this page represents TI's knowledge and belief as of the date that it is provided. TI bases its knowledge and belief on information provided by third parties, and makes no representation or warranty as to the accuracy of such information. Efforts are underway to better integrate information from third parties. TI has taken and continues to take reasonable steps to provide representative and accurate information but may not have conducted destructive testing or chemical analysis on incoming materials and chemicals. TI and TI suppliers consider certain information to be proprietary, and thus CAS numbers and other limited information may not be available for release.

In no event shall TI's liability arising out of such information exceed the total purchase price of the TI part(s) at issue in this document sold by TI to Customer on an annual basis.

TRAY

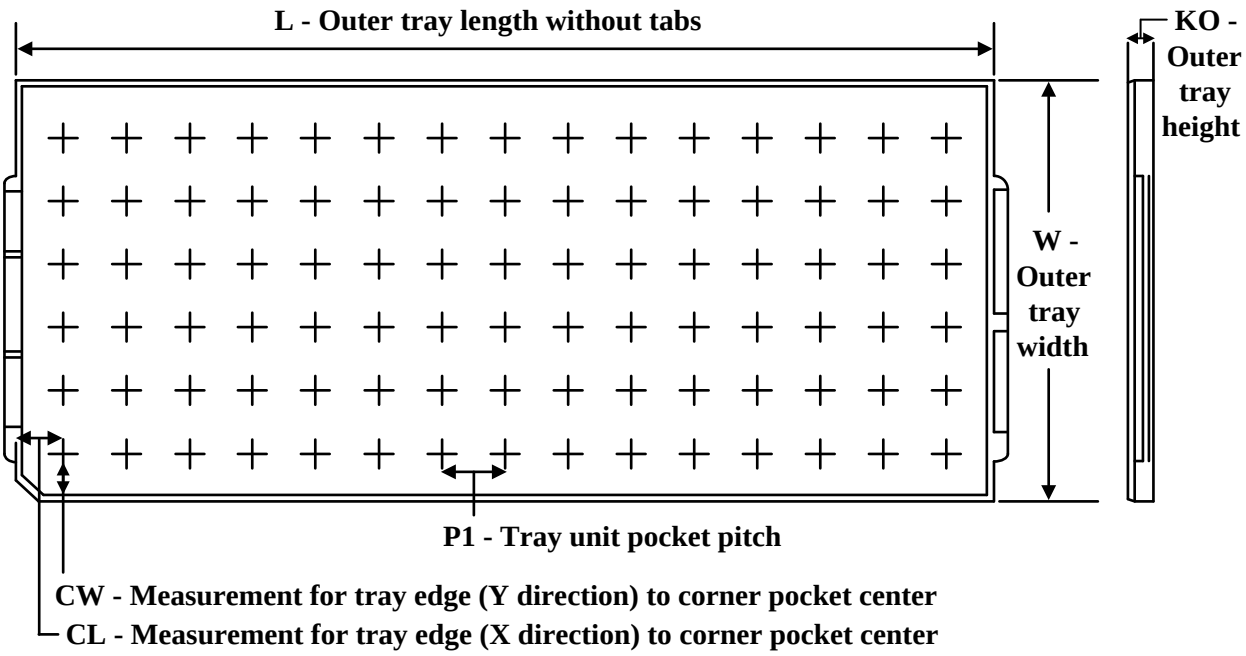

Chamfer on Tray corner indicates Pin 1 orientation of packed units.

*All dimensions are nominal

Device	Package Name	Package Type	Pins	SPQ	Unit array matrix	Max temperature (°C)	L (mm)	W (mm)	K0 (µm)	P1 (mm)	CL (mm)	CW (mm)
JL156BGA	LMC	TO-CAN	8	20	2 X 10	150	126.49	61.98	8890	11.18	12.95	18.54
JM38510/11402BGA	LMC	TO-CAN	8	20	2 X 10	150	126.49	61.98	8890	11.18	12.95	18.54
M38510/11402BGA	LMC	TO-CAN	8	20	2 X 10	150	126.49	61.98	8890	11.18	12.95	18.54

LMC0008A

TO-CAN - 5.72 mm max height

TRANSISTOR OUTLINE

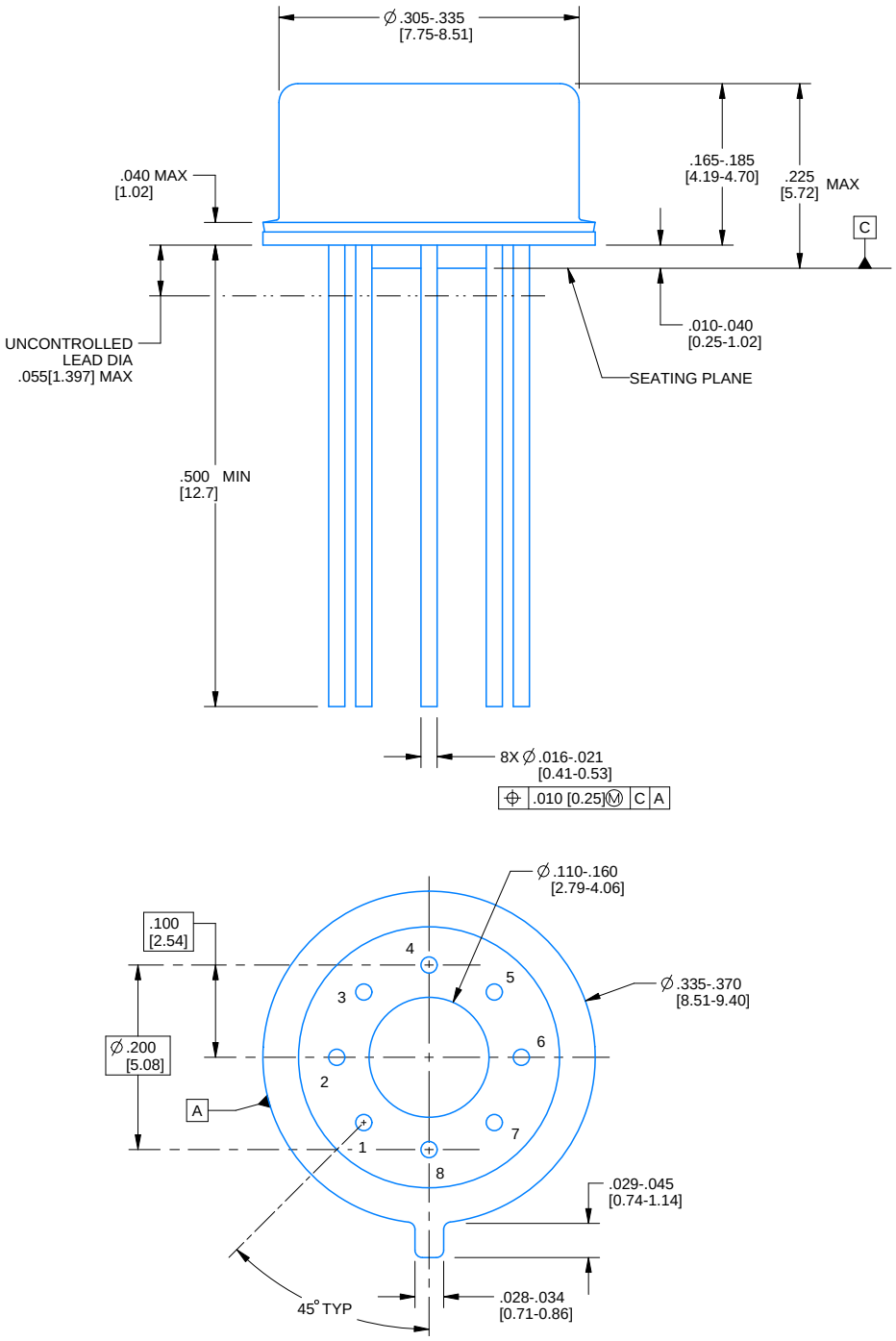

4220610/B 09/2024

NOTES:

1. All linear dimensions are in inches [millimeters]. Any dimensions in parenthesis are for reference only. Dimensioning and tolerancing per ASME Y14.5M.
2. This drawing is subject to change without notice.
3. Pin numbers shown for reference only. Numbers may not be marked on package.
4. Reference JEDEC registration MO-002/TO-99.

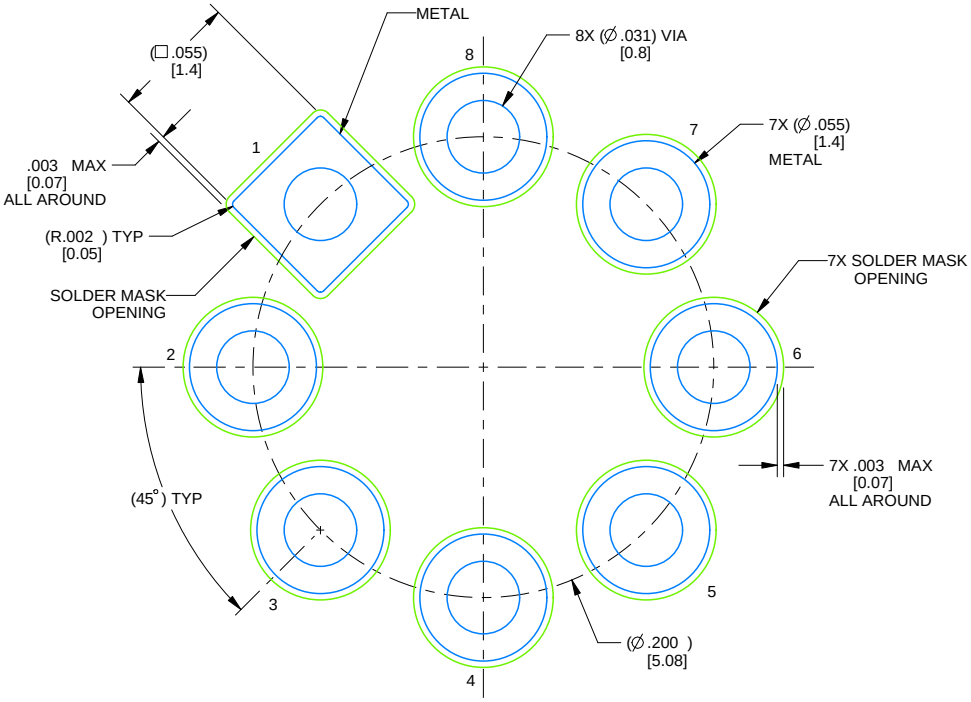

LAND PATTERN EXAMPLE
NON-SOLDER MASK DEFINED
SCALE: 12X

4220610/B 09/2024

IMPORTANT NOTICE AND DISCLAIMER

TI PROVIDES TECHNICAL AND RELIABILITY DATA (INCLUDING DATA SHEETS), DESIGN RESOURCES (INCLUDING REFERENCE DESIGNS), APPLICATION OR OTHER DESIGN ADVICE, WEB TOOLS, SAFETY INFORMATION, AND OTHER RESOURCES “AS IS” AND WITH ALL FAULTS, AND DISCLAIMS ALL WARRANTIES, EXPRESS AND IMPLIED, INCLUDING WITHOUT LIMITATION ANY IMPLIED WARRANTIES OF MERCHANTABILITY, FITNESS FOR A PARTICULAR PURPOSE OR NON-INFRINGEMENT OF THIRD PARTY INTELLECTUAL PROPERTY RIGHTS.

These resources are intended for skilled developers designing with TI products. You are solely responsible for (1) selecting the appropriate TI products for your application, (2) designing, validating and testing your application, and (3) ensuring your application meets applicable standards, and any other safety, security, regulatory or other requirements.

These resources are subject to change without notice. TI grants you permission to use these resources only for development of an application that uses the TI products described in the resource. Other reproduction and display of these resources is prohibited. No license is granted to any other TI intellectual property right or to any third party intellectual property right. TI disclaims responsibility for, and you will fully indemnify TI and its representatives against, any claims, damages, costs, losses, and liabilities arising out of your use of these resources.

TI’s products are provided subject to TI’s Terms of Sale or other applicable terms available either on ti.com or provided in conjunction with such TI products. TI’s provision of these resources does not expand or otherwise alter TI’s applicable warranties or warranty disclaimers for TI products.

TI objects to and rejects any additional or different terms you may have proposed.

Mailing Address: Texas Instruments, Post Office Box 655303, Dallas, Texas 75265
Copyright © 2025, Texas Instruments Incorporated