SN74ALVC245
OCTAL BUS TRANSCEIVER WITH 3-STATE OUTPUTS

SCES271D – APRIL 1999 – REVISED JULY 2004

FEATURES

- **Operates from 1.65 V to 3.6 V**
- **Max t_{pd} of 3.4 ns at 3.3 V**
- **±24-mA Output Drive at 3.3 V**
- **Latch-Up Performance Exceeds 250 mA Per JESD 17**

DGV, DW, NS, OR PW PACKAGE (TOP VIEW)

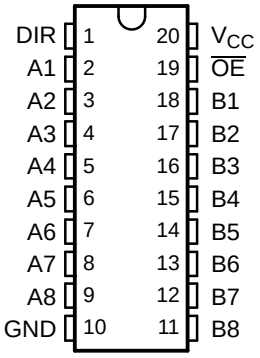

RGY PACKAGE (TOP VIEW)

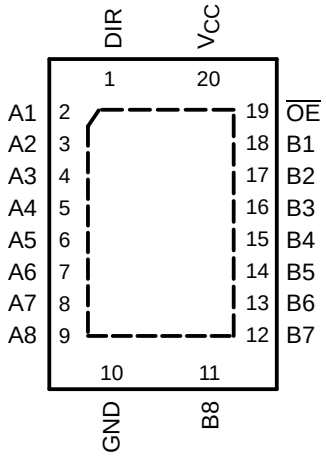

DESCRIPTION/ORDERING INFORMATION

This octal bus transceiver is designed for 1.65-V to 3.6-V V_{CC} operation.

The SN74ALVC245 is designed for asynchronous communication between data buses. The device transmits data from the A bus to the B bus or from the B bus to the A bus, depending on the logic level at the direction-control (DIR) input. The output-enable ($\overline{OE}$) input can be used to disable the device so the buses are effectively isolated.

To ensure the high-impedance state during power up or power down, $\overline{OE}$ should be tied to V_{CC} through a pullup resistor; the minimum value of the resistor is determined by the current-sinking capability of the driver.

ORDERING INFORMATION

T_A	PACKAGE(1)		ORDERABLE PART NUMBER	TOP-SIDE MARKING
-40°C to 85°C	QFN - RGY	Tape and reel	SN74ALVC245RGYR	VA245
	SOIC - DW	Tube	SN74ALVC245DW	ALVC245
		Tape and reel	SN74ALVC245DWR	
	SOP - NS	Tape and reel	SN74ALVC245NSR	ALVC245
	TSSOP - PW	Tube	SN74ALVC245PW	VA245
		Tape and reel	SN74ALVC245PWR	
	TVSOP - DGV	Tape and reel	SN74ALVC245DGVR	VA245

(1) Package drawings, standard packing quantities, thermal data, symbolization, and PCB design guidelines are available at www.ti.com/sc/package.

Please be aware that an important notice concerning availability, standard warranty, and use in critical applications of Texas Instruments semiconductor products and disclaimers thereto appears at the end of this data sheet.

PRODUCTION DATA information is current as of publication date. Products conform to specifications per the terms of the Texas Instruments standard warranty. Production processing does not necessarily include testing of all parameters.

Copyright © 1999–2004, Texas Instruments Incorporated

FUNCTION TABLE

INPUTS		OPERATION
$\overline{OE}$	DIR	
L	L	B data to A bus
L	H	A data to B bus
H	X	Isolation

LOGIC DIAGRAM (POSITIVE LOGIC)

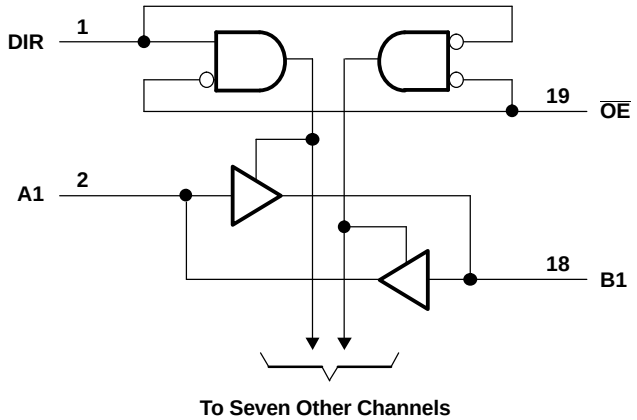

ABSOLUTE MAXIMUM RATINGS[1]

over operating free-air temperature range (unless otherwise noted)

			MIN	MAX	UNIT
V_{CC}	Supply voltage range		-0.5	4.6	V
V_I	Input voltage range	Except I/O ports[2]	-0.5	4.6	V
		I/O ports[2][3]	-0.5	V_{CC} + 0.5	
V_O	Output voltage range[2][3]		-0.5	V_{CC} + 0.5	V
I_{IK}	Input clamp current	$V_I < 0$		-50	mA
I_{OK}	Output clamp current	$V_O < 0$		-50	mA
I_O	Continuous output current			±50	mA
	Continuous current through V_{CC} or GND			±100	mA
θ_{JA}	Package thermal impedance	DGV package[4]		92	°C/W
		DW package[4]		58	
		NS package[4]		60	
		PW package[4]		83	
		RGY package[5]		37	
T_{stg}	Storage temperature range		-65	150	°C

(1) Stresses beyond those listed under "absolute maximum ratings" may cause permanent damage to the device. These are stress ratings only, and functional operation of the device at these or any other conditions beyond those indicated under "recommended operating conditions" is not implied. Exposure to absolute-maximum-rated conditions for extended periods may affect device reliability.
(2) The input negative-voltage and output voltage ratings may be exceeded if the input and output current ratings are observed.
(3) This value is limited to 4.6 V, maximum.
(4) The package thermal impedance is calculated in accordance with JESD 51-7.
(5) The package thermal impedance is calculated in accordance with JESD 51-5.

RECOMMENDED OPERATING CONDITIONS[1]

			MIN	MAX	UNIT
V_{CC}	Supply voltage		1.65	3.6	V
V_{IH}	High-level input voltage	V_{CC} = 1.65 V to 1.95 V	$0.65 \times V_{CC}$		V
		V_{CC} = 2.3 V to 2.7 V	1.7		
		V_{CC} = 2.7 V to 3.6 V	2		
V_{IL}	Low-level input voltage	V_{CC} = 1.65 V to 1.95 V		$0.35 \times V_{CC}$	V
		V_{CC} = 2.3 V to 2.7 V		0.7	
		V_{CC} = 2.7 V to 3.6 V		0.8	
V_I	Input voltage		0	V_{CC}	V
V_O	Output voltage		0	V_{CC}	V
I_{OH}	High-level output current	V_{CC} = 1.65 V		-4	mA
		V_{CC} = 2.3 V		-12	
		V_{CC} = 2.7 V		-12	
		V_{CC} = 3 V		-24	
I_{OL}	Low-level output current	V_{CC} = 1.65 V		4	mA
		V_{CC} = 2.3 V		12	
		V_{CC} = 2.7 V		12	
		V_{CC} = 3 V		24	
$\Delta t/\Delta v$	Input transition rise or fall rate			10	ns/V
T_A	Operating free-air temperature		-40	85	°C

(1) All unused inputs of the device must be held at V_{CC} or GND to ensure proper device operation. Refer to the TI application report, *Implications of Slow or Floating CMOS Inputs*, literature number SCBA004.

ELECTRICAL CHARACTERISTICS

over recommended operating free-air temperature range (unless otherwise noted)

PARAMETER		TEST CONDITIONS	V_{CC}	MIN	TYP(1)	MAX	UNIT
V_{OH}		I_{OH} = -100 µA	1.65 V to 3.6 V	V_{CC} - 0.2			V
		I_{OH} = -4 mA	1.65 V	1.2			
		I_{OH} = -6 mA	2.3 V	2			
		I_{OH} = -12 mA	2.3 V	1.7			
			2.7 V	2.2			
			3 V	2.4			
		I_{OH} = -24 mA	3 V	2			
V_{OL}		I_{OL} = 100 µA	1.65 V to 3.6 V			0.2	V
		I_{OL} = 4 mA	1.65 V			0.45	
		I_{OL} = 6 mA	2.3 V			0.4	
		I_{OL} = 12 mA	2.3 V			0.7	
			2.7 V			0.4	
		I_{OL} = 24 mA	3 V			0.55	
I_I		$V_I = V_{CC}$ or GND	3.6 V			±5	µA
I_{OZ}(2)		$V_O = V_{CC}$ or GND	3.6 V			±10	µA
I_{CC}		$V_I = V_{CC}$ or GND, I_O = 0	3.6 V			10	µA
ΔI_{CC}		One input at V_{CC} - 0.6 V, Other inputs at V_{CC} or GND	3 V to 3.6 V			750	µA
C_i	Control inputs	$V_I = V_{CC}$ or GND	3.3 V		4.5		pF
C_{io}	A or B ports	$V_O = V_{CC}$ or GND	3.3 V		11.5		pF

(1) All typical values are at V_{CC} = 3.3 V, T_A = 25°C.
(2) For I/O ports, the parameter I_{OZ} includes the input leakage current.

SWITCHING CHARACTERISTICS

over recommended operating free-air temperature range (unless otherwise noted) (see Figure 1)

PARAMETER	FROM (INPUT)	TO (OUTPUT)	V_{CC} = 1.8 V ± 0.15 V		V_{CC} = 2.5 V ± 0.2 V		V_{CC} = 2.7 V		V_{CC} = 3.3 V ± 0.3 V		UNIT
			MIN	MAX	MIN	MAX	MIN	MAX	MIN	MAX	
t_{pd}	A or B	B or A	1.5	6	1	3.5		3.6	1.3	3.4	ns
t_{en}	$\overline{OE}$	A or B	3.4	8.6	2	6		6.3	1.6	5.5	ns
t_{dis}	$\overline{OE}$	A or B	2.7	8	1	4.8		5.3	1.7	5.5	ns

OPERATING CHARACTERISTICS

T_A = 25°C

PARAMETER			TEST CONDITIONS	V_{CC} = 1.8 V	V_{CC} = 2.5 V	V_{CC} = 3.3 V	UNIT
				TYP	TYP	TYP	
C_{pd}	Power dissipation capacitance per transceiver	Outputs enabled	C_L = 0 pF, f = 10 MHz	25	27	30	pF
		Outputs disabled		0	0	0	

PARAMETER MEASUREMENT INFORMATION

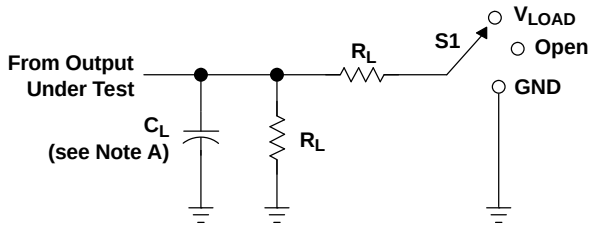

LOAD CIRCUIT

TEST	S1
t_{pd} t_{PLZ}/t_{PZL} t_{PHZ}/t_{PZH}	Open V_{LOAD} GND

V_{CC}	INPUT		V_M	V_{LOAD}	C_L	R_L	V_Δ
	V_I	t_r/t_f					
1.8 V ± 0.15 V	V_{CC}	≤2 ns	$V_{CC}/2$	$2 \times V_{CC}$	30 pF	1 kΩ	0.15 V
2.5 V ± 0.2 V	V_{CC}	≤2 ns	$V_{CC}/2$	$2 \times V_{CC}$	30 pF	500 Ω	0.15 V
2.7 V	2.7 V	≤2.5 ns	1.5 V	6 V	50 pF	500 Ω	0.3 V
3.3 V ± 0.3 V	2.7 V	≤2.5 ns	1.5 V	6 V	50 pF	500 Ω	0.3 V

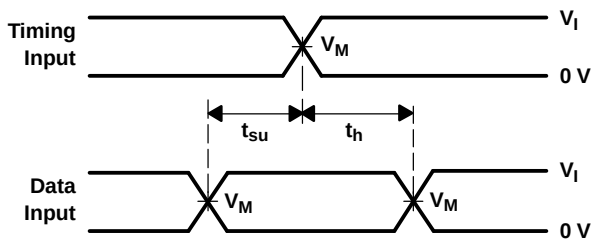

VOLTAGE WAVEFORMS
SETUP AND HOLD TIMES

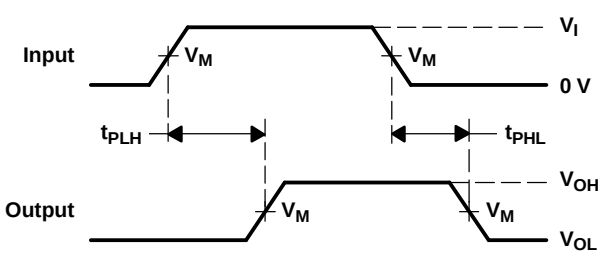

VOLTAGE WAVEFORMS
PROPAGATION DELAY TIMES

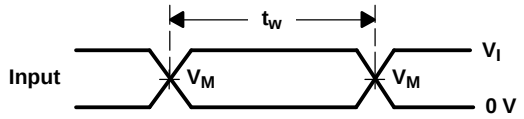

VOLTAGE WAVEFORMS
PULSE DURATION

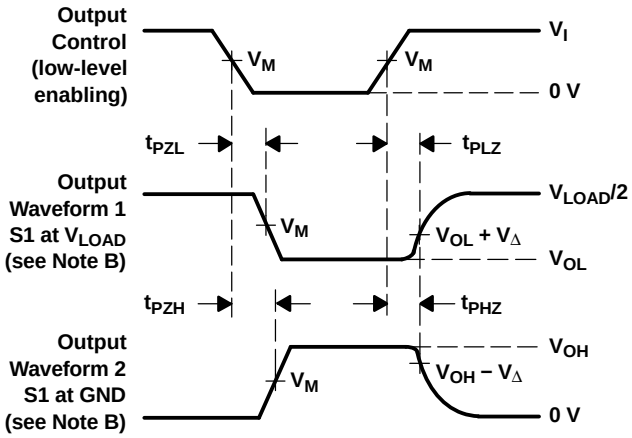

VOLTAGE WAVEFORMS
ENABLE AND DISABLE TIMES

NOTES:
A. C_L includes probe and jig capacitance.
B. Waveform 1 is for an output with internal conditions such that the output is low, except when disabled by the output control. Waveform 2 is for an output with internal conditions such that the output is high, except when disabled by the output control.
C. All input pulses are supplied by generators having the following characteristics: PRR ≤ 10 MHz, Z_O = 50 Ω.
D. The outputs are measured one at a time, with one transition per measurement.
E. t_{PLZ} and t_{PHZ} are the same as t_{dis}.
F. t_{PZL} and t_{PZH} are the same as t_{en}.
G. t_{PLH} and t_{PHL} are the same as t_{pd}.
H. All parameters and waveforms are not applicable to all devices.

Figure 1. Load Circuit and Voltage Waveforms

PACKAGING INFORMATION

Orderable part number	Status (1)	Material type (2)	Package | Pins	Package qty | Carrier	RoHS (3)	Lead finish/ Ball material (4)	MSL rating/ Peak reflow (5)	Op temp (°C)	Part marking (6)
SN74ALVC245DGVR	Active	Production	TVSOP (DGV) | 20	2000 | LARGE T&R	Yes	NIPDAU	Level-1-260C-UNLIM	-40 to 85	VA245
SN74ALVC245DGVR.B	Active	Production	TVSOP (DGV) | 20	2000 | LARGE T&R	Yes	NIPDAU	Level-1-260C-UNLIM	-40 to 85	VA245
SN74ALVC245DW	Active	Production	SOIC (DW) | 20	25 | TUBE	Yes	NIPDAU	Level-1-260C-UNLIM	-40 to 85	ALVC245
SN74ALVC245DW.B	Active	Production	SOIC (DW) | 20	25 | TUBE	Yes	NIPDAU	Level-1-260C-UNLIM	-40 to 85	ALVC245
SN74ALVC245DWR	Active	Production	SOIC (DW) | 20	2000 | LARGE T&R	Yes	NIPDAU	Level-1-260C-UNLIM	-40 to 85	ALVC245
SN74ALVC245DWR.B	Active	Production	SOIC (DW) | 20	2000 | LARGE T&R	Yes	NIPDAU	Level-1-260C-UNLIM	-40 to 85	ALVC245
SN74ALVC245NSR	Active	Production	SOP (NS) | 20	2000 | LARGE T&R	Yes	NIPDAU	Level-1-260C-UNLIM	-40 to 85	ALVC245
SN74ALVC245NSR.B	Active	Production	SOP (NS) | 20	2000 | LARGE T&R	Yes	NIPDAU	Level-1-260C-UNLIM	-40 to 85	ALVC245
SN74ALVC245PW	Active	Production	TSSOP (PW) | 20	70 | TUBE	Yes	NIPDAU	Level-1-260C-UNLIM	-40 to 85	VA245
SN74ALVC245PW.B	Active	Production	TSSOP (PW) | 20	70 | TUBE	Yes	NIPDAU	Level-1-260C-UNLIM	-40 to 85	VA245
SN74ALVC245PWR	Active	Production	TSSOP (PW) | 20	2000 | LARGE T&R	Yes	NIPDAU	Level-1-260C-UNLIM	-40 to 85	VA245
SN74ALVC245PWR.B	Active	Production	TSSOP (PW) | 20	2000 | LARGE T&R	Yes	NIPDAU	Level-1-260C-UNLIM	-40 to 85	VA245
SN74ALVC245PWRG4	Active	Production	TSSOP (PW) | 20	2000 | LARGE T&R	Yes	NIPDAU	Level-1-260C-UNLIM	-40 to 85	VA245
SN74ALVC245PWRG4.B	Active	Production	TSSOP (PW) | 20	2000 | LARGE T&R	Yes	NIPDAU	Level-1-260C-UNLIM	-40 to 85	VA245
SN74ALVC245RGYR	Active	Production	VQFN (RGY) | 20	3000 | LARGE T&R	Yes	NIPDAU	Level-2-260C-1 YEAR	-40 to 85	VA245
SN74ALVC245RGYR.B	Active	Production	VQFN (RGY) | 20	3000 | LARGE T&R	Yes	NIPDAU	Level-2-260C-1 YEAR	-40 to 85	VA245

(1) **Status:** For more details on status, see our product life cycle.

(2) **Material type:** When designated, preproduction parts are prototypes/experimental devices, and are not yet approved or released for full production. Testing and final process, including without limitation quality assurance, reliability performance testing, and/or process qualification, may not yet be complete, and this item is subject to further changes or possible discontinuation. If available for ordering, purchases will be subject to an additional waiver at checkout, and are intended for early internal evaluation purposes only. These items are sold without warranties of any kind.

(3) **RoHS values:** Yes, No, RoHS Exempt. See the TI RoHS Statement for additional information and value definition.

(4) **Lead finish/Ball material:** Parts may have multiple material finish options. Finish options are separated by a vertical ruled line. Lead finish/Ball material values may wrap to two lines if the finish value exceeds the maximum column width.

(5) **MSL rating/Peak reflow:** The moisture sensitivity level ratings and peak solder (reflow) temperatures. In the event that a part has multiple moisture sensitivity ratings, only the lowest level per JEDEC standards is shown. Refer to the shipping label for the actual reflow temperature that will be used to mount the part to the printed circuit board.

(6) **Part marking:** There may be an additional marking, which relates to the logo, the lot trace code information, or the environmental category of the part.

Multiple part markings will be inside parentheses. Only one part marking contained in parentheses and separated by a "~" will appear on a part. If a line is indented then it is a continuation of the previous line and the two combined represent the entire part marking for that device.

Important Information and Disclaimer: The information provided on this page represents TI's knowledge and belief as of the date that it is provided. TI bases its knowledge and belief on information provided by third parties, and makes no representation or warranty as to the accuracy of such information. Efforts are underway to better integrate information from third parties. TI has taken and continues to take reasonable steps to provide representative and accurate information but may not have conducted destructive testing or chemical analysis on incoming materials and chemicals. TI and TI suppliers consider certain information to be proprietary, and thus CAS numbers and other limited information may not be available for release.

In no event shall TI's liability arising out of such information exceed the total purchase price of the TI part(s) at issue in this document sold by TI to Customer on an annual basis.

TAPE AND REEL INFORMATION

REEL DIMENSIONS

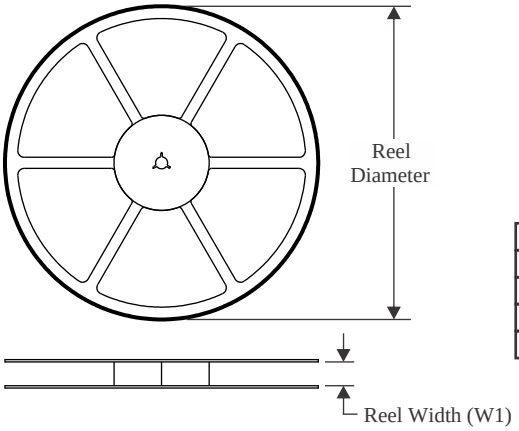

TAPE DIMENSIONS

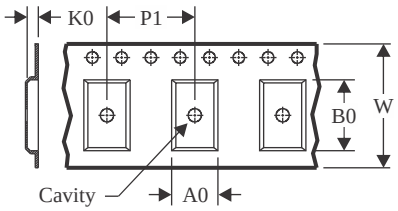

A0	Dimension designed to accommodate the component width
B0	Dimension designed to accommodate the component length
K0	Dimension designed to accommodate the component thickness
W	Overall width of the carrier tape
P1	Pitch between successive cavity centers

QUADRANT ASSIGNMENTS FOR PIN 1 ORIENTATION IN TAPE

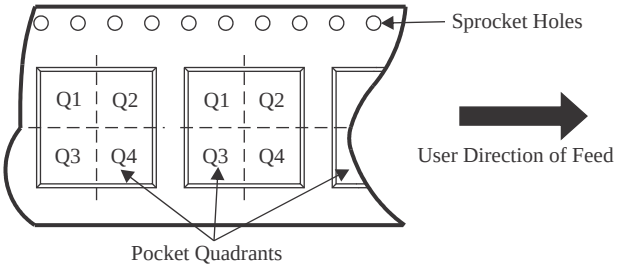

*All dimensions are nominal

Device	Package Type	Package Drawing	Pins	SPQ	Reel Diameter (mm)	Reel Width W1 (mm)	A0 (mm)	B0 (mm)	K0 (mm)	P1 (mm)	W (mm)	Pin1 Quadrant
SN74ALVC245DGVR	TVSOP	DGV	20	2000	330.0	12.4	6.9	5.6	1.6	8.0	12.0	Q1
SN74ALVC245DWR	SOIC	DW	20	2000	330.0	24.4	10.8	13.3	2.7	12.0	24.0	Q1
SN74ALVC245NSR	SOP	NS	20	2000	330.0	24.4	8.4	13.0	2.5	12.0	24.0	Q1
SN74ALVC245PWR	TSSOP	PW	20	2000	330.0	16.4	6.95	7.1	1.6	8.0	16.0	Q1
SN74ALVC245PWRG4	TSSOP	PW	20	2000	330.0	16.4	6.95	7.1	1.6	8.0	16.0	Q1
SN74ALVC245RGYR	VQFN	RGY	20	3000	330.0	12.4	3.8	4.8	1.6	8.0	12.0	Q1

TAPE AND REEL BOX DIMENSIONS

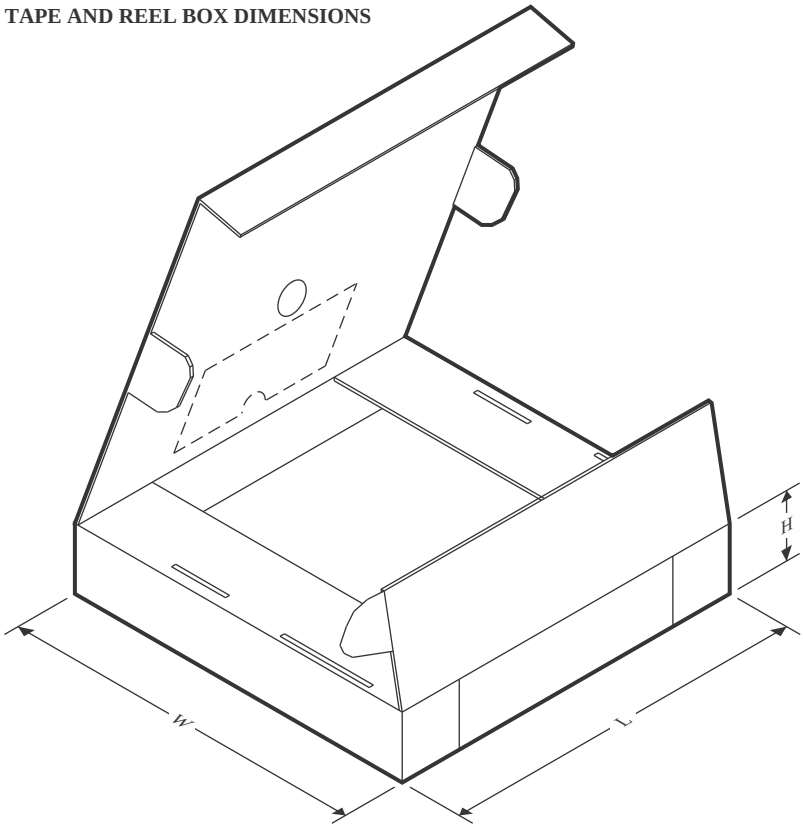

*All dimensions are nominal

Device	Package Type	Package Drawing	Pins	SPQ	Length (mm)	Width (mm)	Height (mm)
SN74ALVC245DGVR	TVSOP	DGV	20	2000	356.0	356.0	35.0
SN74ALVC245DWR	SOIC	DW	20	2000	367.0	367.0	45.0
SN74ALVC245NSR	SOP	NS	20	2000	367.0	367.0	45.0
SN74ALVC245PWR	TSSOP	PW	20	2000	356.0	356.0	35.0
SN74ALVC245PWRG4	TSSOP	PW	20	2000	356.0	356.0	35.0
SN74ALVC245RGYR	VQFN	RGY	20	3000	356.0	356.0	35.0

TUBE

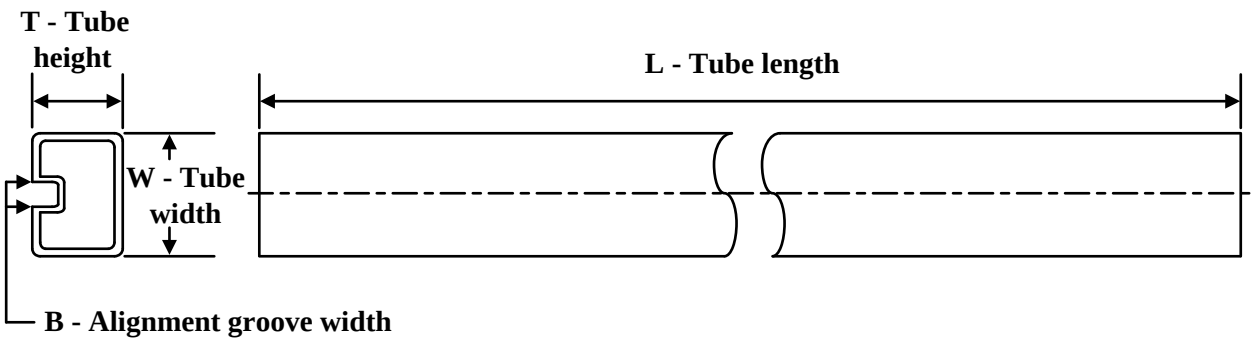

*All dimensions are nominal

Device	Package Name	Package Type	Pins	SPQ	L (mm)	W (mm)	T (µm)	B (mm)
SN74ALVC245DW	DW	SOIC	20	25	507	12.83	5080	6.6
SN74ALVC245DW.B	DW	SOIC	20	25	507	12.83	5080	6.6
SN74ALVC245PW	PW	TSSOP	20	70	530	10.2	3600	3.5
SN74ALVC245PW.B	PW	TSSOP	20	70	530	10.2	3600	3.5

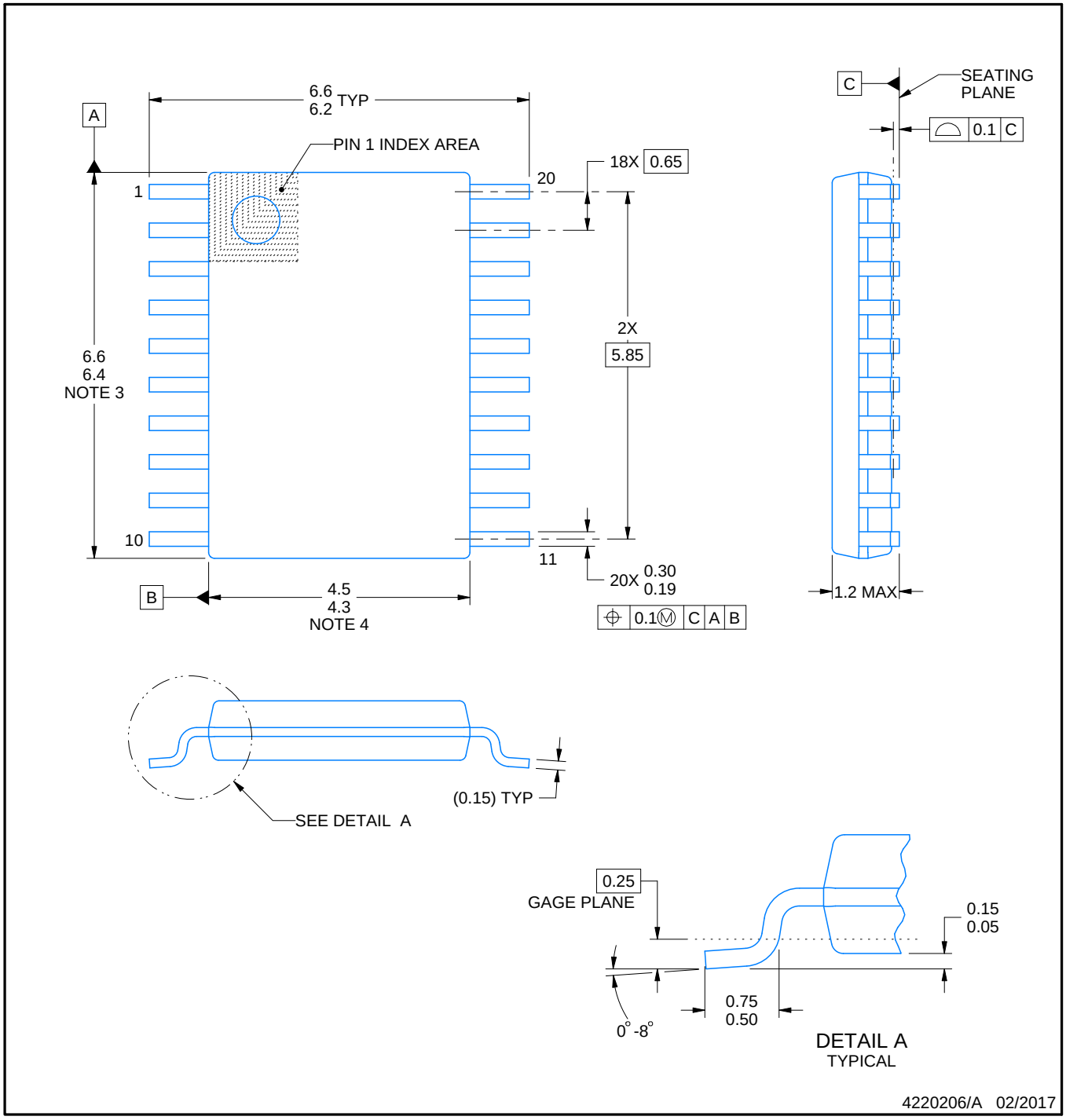

NOTES:

1. All linear dimensions are in millimeters. Any dimensions in parenthesis are for reference only. Dimensioning and tolerancing per ASME Y14.5M.
2. This drawing is subject to change without notice.
3. This dimension does not include mold flash, protrusions, or gate burrs. Mold flash, protrusions, or gate burrs shall not exceed 0.15 mm per side.
4. This dimension does not include interlead flash. Interlead flash shall not exceed 0.25 mm per side.
5. Reference JEDEC registration MO-153.

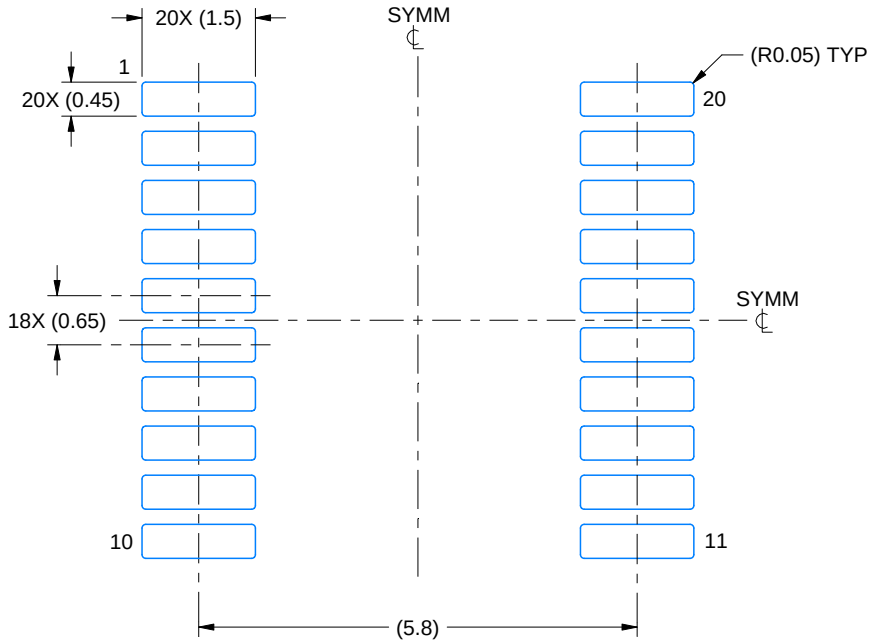

LAND PATTERN EXAMPLE
EXPOSED METAL SHOWN
SCALE: 10X

NON-SOLDER MASK DEFINED (PREFERRED)

SOLDER MASK DEFINED

SOLDER MASK DETAILS

4220206/A 02/2017

NOTES: (continued)

6. Publication IPC-7351 may have alternate designs.
7. Solder mask tolerances between and around signal pads can vary based on board fabrication site.

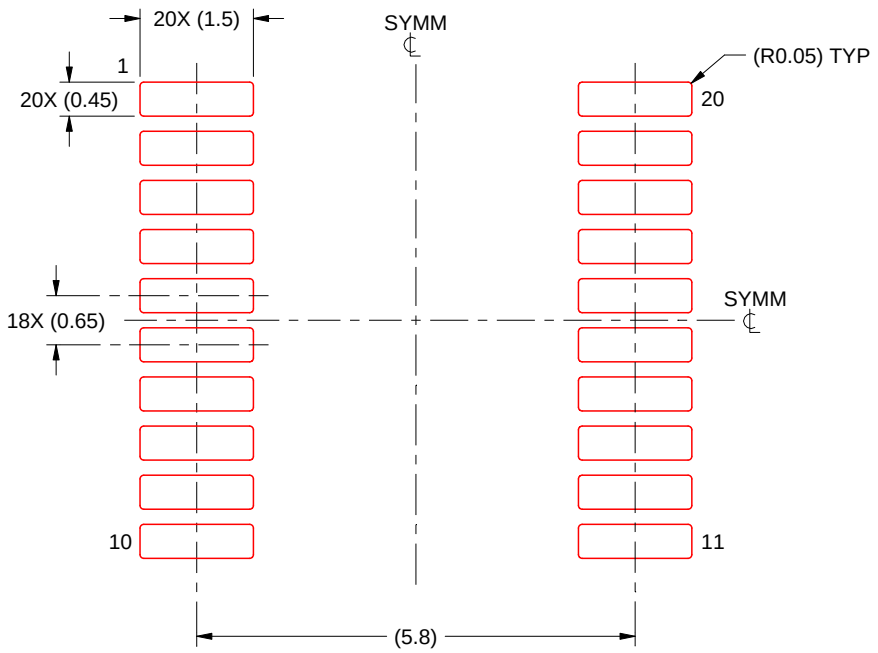

SOLDER PASTE EXAMPLE
BASED ON 0.125 mm THICK STENCIL
SCALE: 10X

4220206/A 02/2017

NOTES: (continued)

8. Laser cutting apertures with trapezoidal walls and rounded corners may offer better paste release. IPC-7525 may have alternate design recommendations.
9. Board assembly site may have different recommendations for stencil design.

MECHANICAL DATA

NS (R-PDSO-G)** **PLASTIC SMALL-OUTLINE PACKAGE**

14-PINS SHOWN

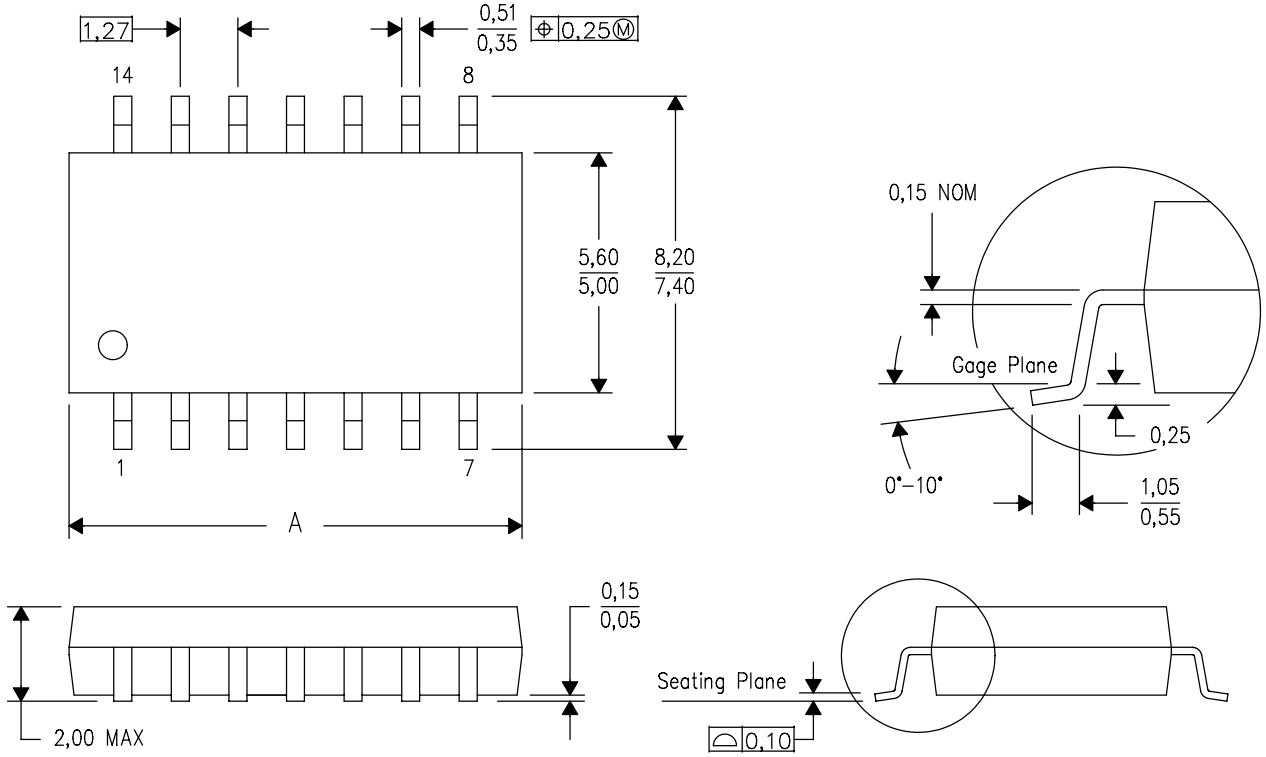

DIM \ PINS **	14	16	20	24
A MAX	10,50	10,50	12,90	15,30
A MIN	9,90	9,90	12,30	14,70

4040062/C 03/03

NOTES:
A. All linear dimensions are in millimeters.
B. This drawing is subject to change without notice.
C. Body dimensions do not include mold flash or protrusion, not to exceed 0,15.

DGV (R-PDSO-G)** **PLASTIC SMALL-OUTLINE**

24 PINS SHOWN

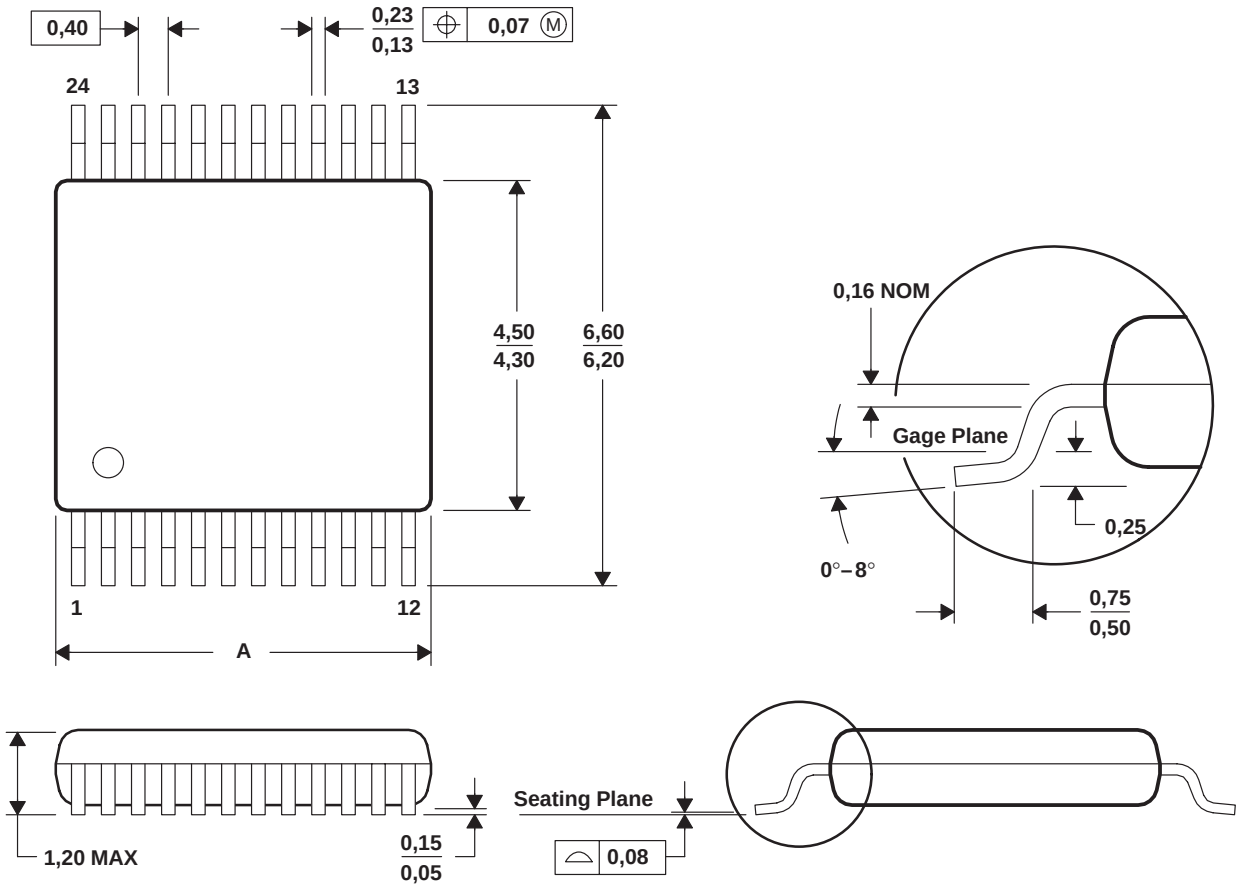

DIM \ PINS **	14	16	20	24	38	48	56
A MAX	3,70	3,70	5,10	5,10	7,90	9,80	11,40
A MIN	3,50	3,50	4,90	4,90	7,70	9,60	11,20

4073251/E 08/00

NOTES: A. All linear dimensions are in millimeters.
B. This drawing is subject to change without notice.
C. Body dimensions do not include mold flash or protrusion, not to exceed 0,15 per side.
D. Falls within JEDEC: 24/48 Pins – MO-153
14/16/20/56 Pins – MO-194

GENERIC PACKAGE VIEW

RGY 20

VQFN - 1 mm max height

3.5 x 4.5, 0.5 mm pitch

PLASTIC QUAD FGLATPACK - NO LEAD

This image is a representation of the package family, actual package may vary.
Refer to the product data sheet for package details.

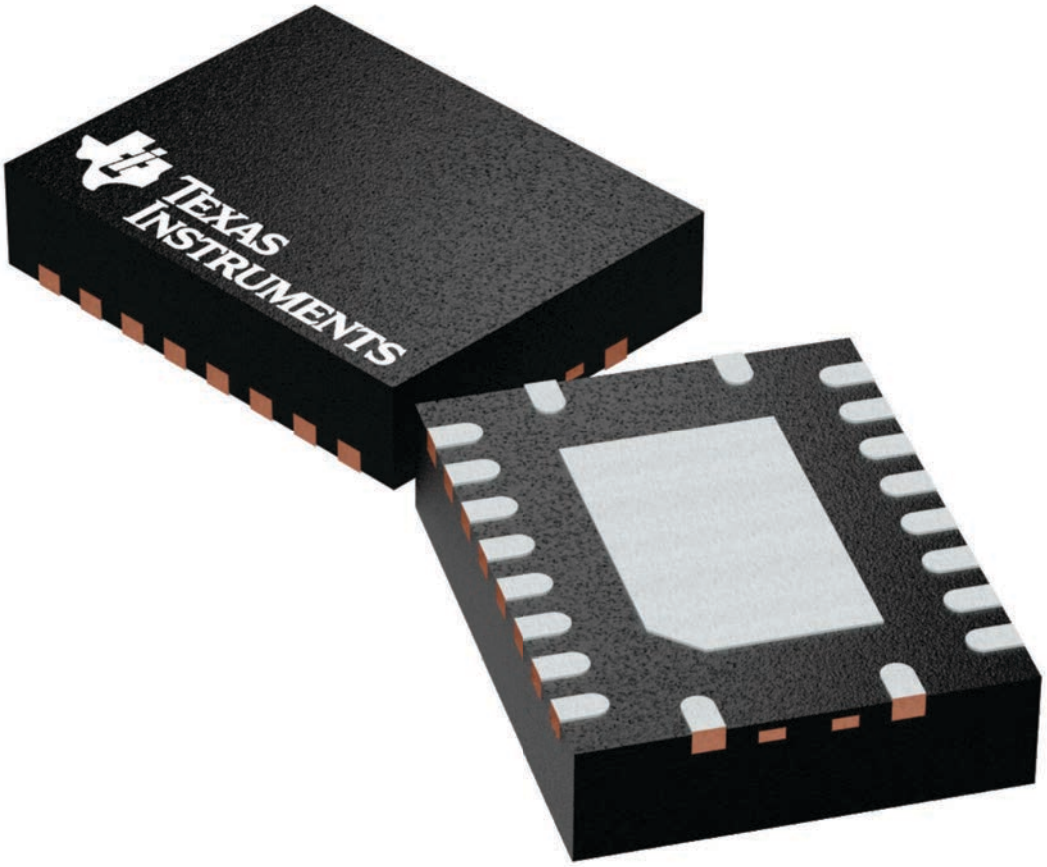

4225264/A

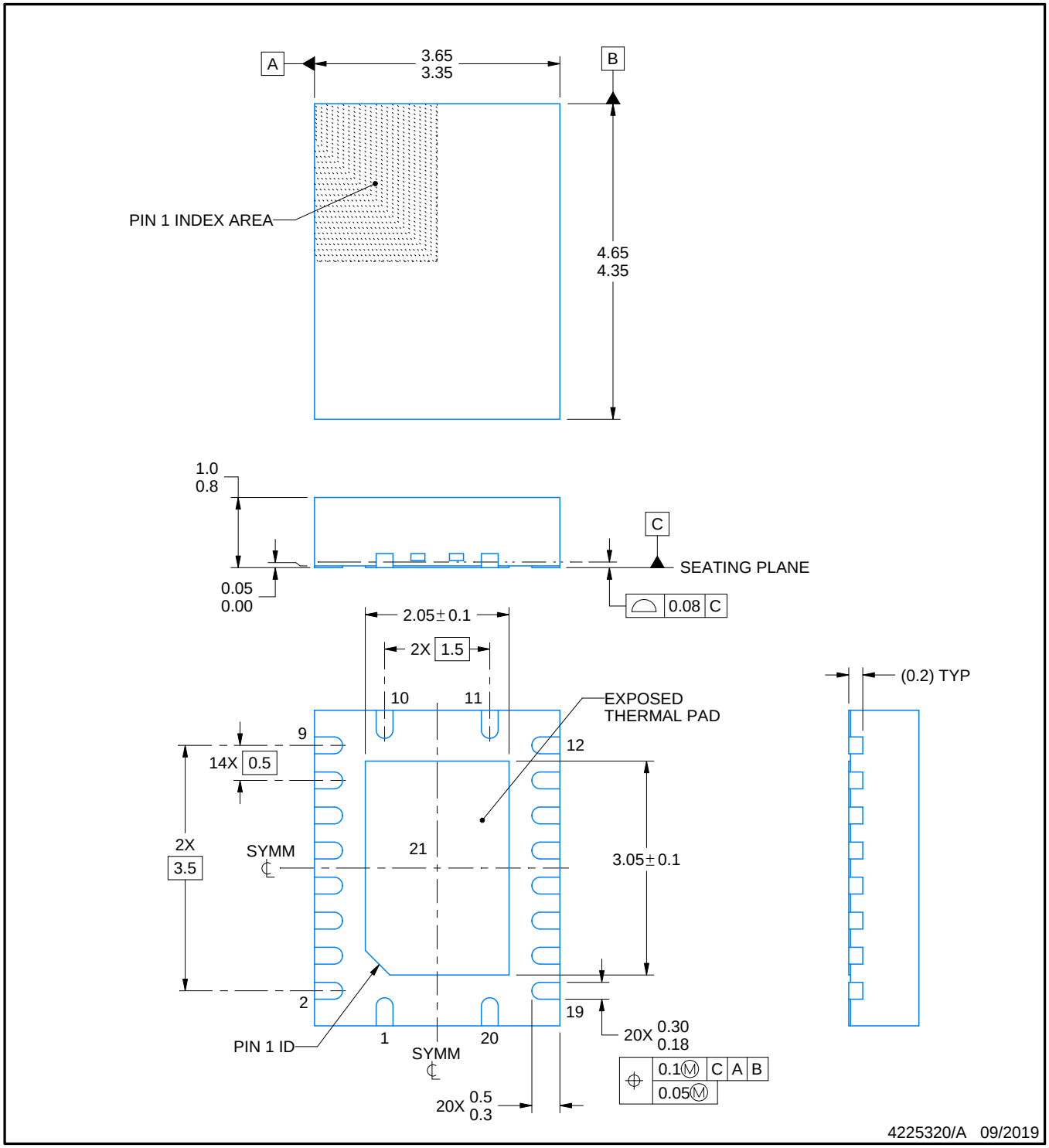

NOTES:

1. All linear dimensions are in millimeters. Any dimensions in parenthesis are for reference only. Dimensioning and tolerancing per ASME Y14.5M.
2. This drawing is subject to change without notice.
3. The package thermal pad must be soldered to the printed circuit board for thermal and mechanical performance.

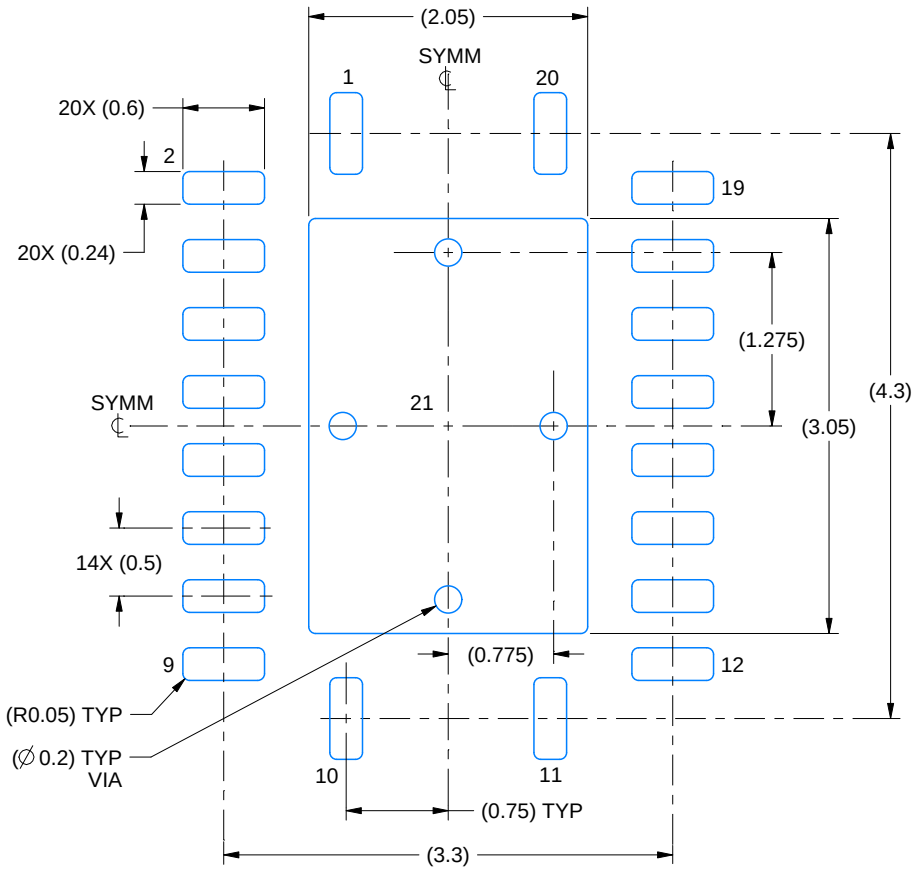

LAND PATTERN EXAMPLE
EXPOSED METAL SHOWN
SCALE:18X

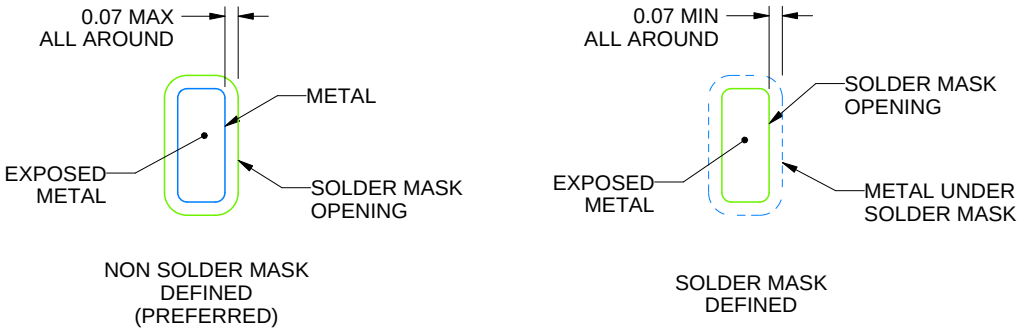

SOLDER MASK DETAILS

4225320/A 09/2019

NOTES: (continued)

4. This package is designed to be soldered to a thermal pad on the board. For more information, see Texas Instruments literature number SLUA271 (www.ti.com/lit/slua271).
5. Vias are optional depending on application, refer to device data sheet. If any vias are implemented, refer to their locations shown on this view. It is recommended that vias under paste be filled, plugged or tented.

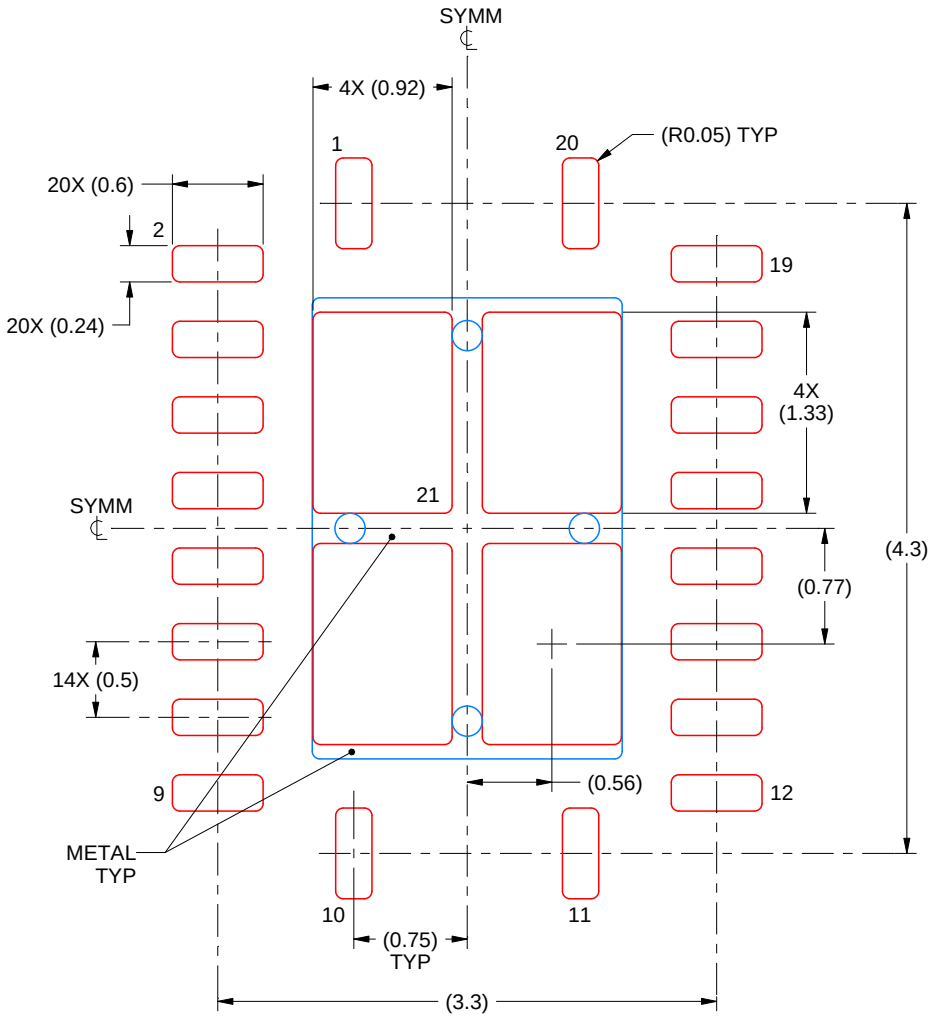

SOLDER PASTE EXAMPLE
BASED ON 0.125 mm THICK STENCIL

EXPOSED PAD 21
78% PRINTED SOLDER COVERAGE BY AREA UNDER PACKAGE
SCALE:20X

4225320/A 09/2019

NOTES: (continued)

6. Laser cutting apertures with trapezoidal walls and rounded corners may offer better paste release. IPC-7525 may have alternate design recommendations.

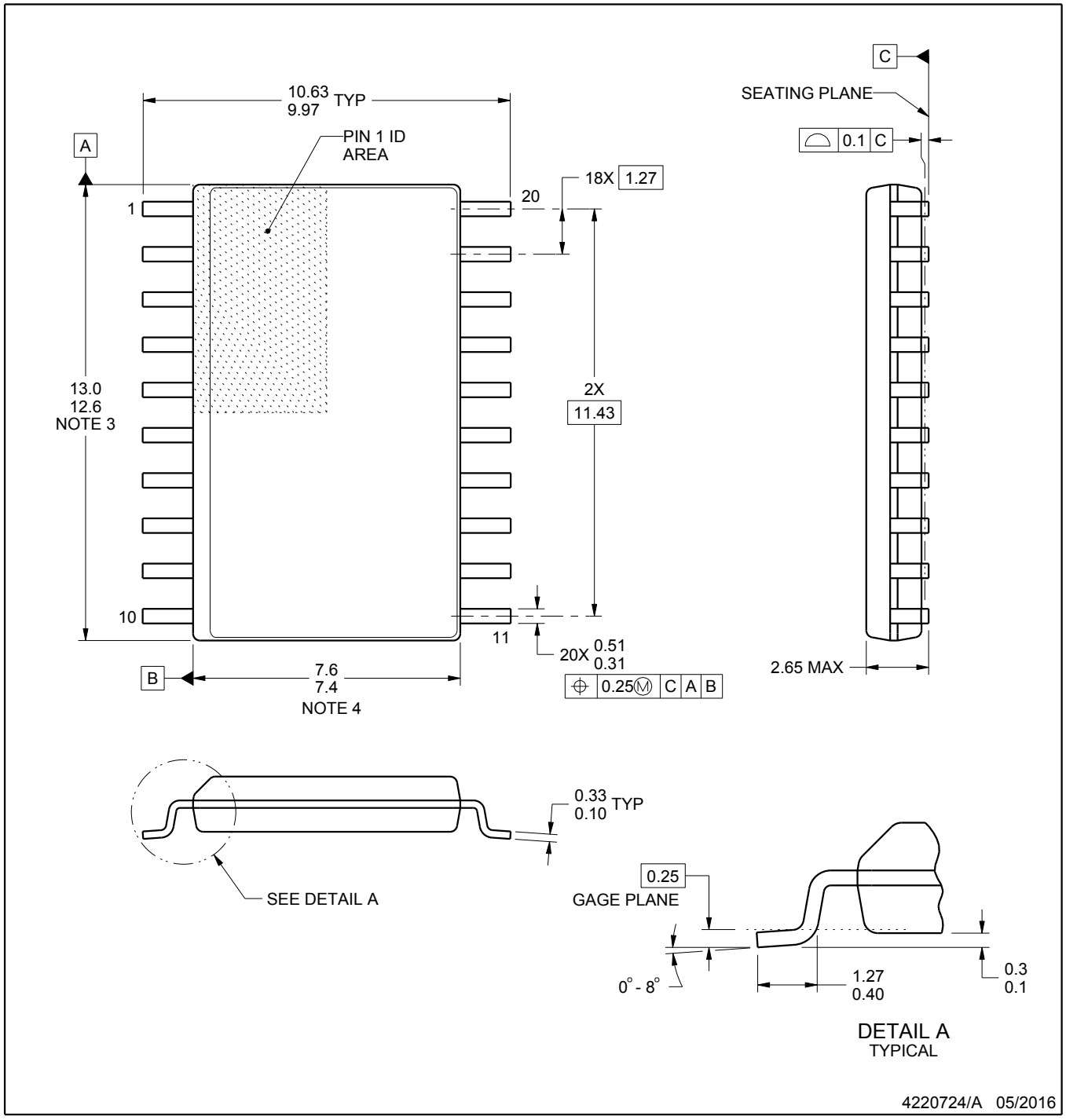

NOTES:

1. All linear dimensions are in millimeters. Dimensions in parenthesis are for reference only. Dimensioning and tolerancing per ASME Y14.5M.
2. This drawing is subject to change without notice.
3. This dimension does not include mold flash, protrusions, or gate burrs. Mold flash, protrusions, or gate burrs shall not exceed 0.15 mm per side.
4. This dimension does not include interlead flash. Interlead flash shall not exceed 0.43 mm per side.
5. Reference JEDEC registration MS-013.

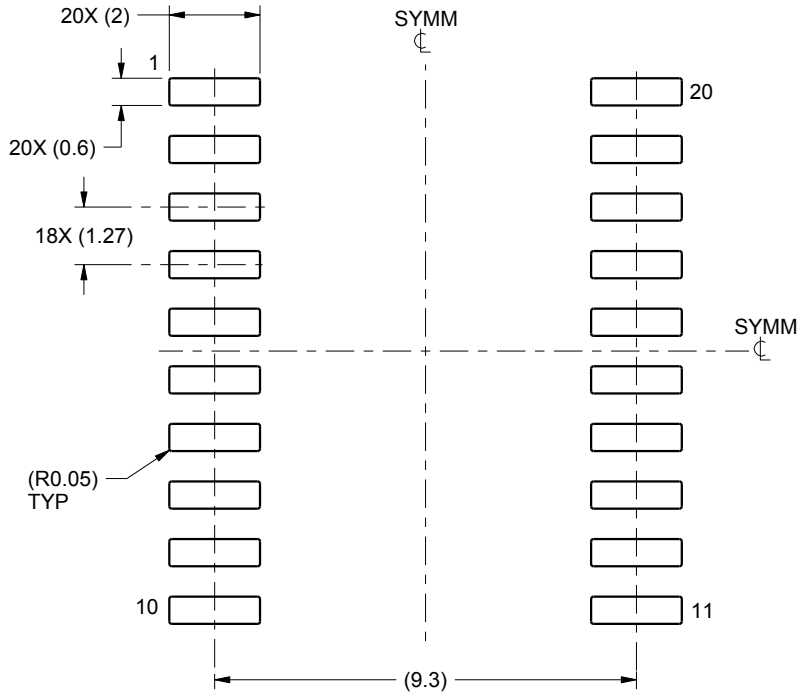

LAND PATTERN EXAMPLE
SCALE:6X

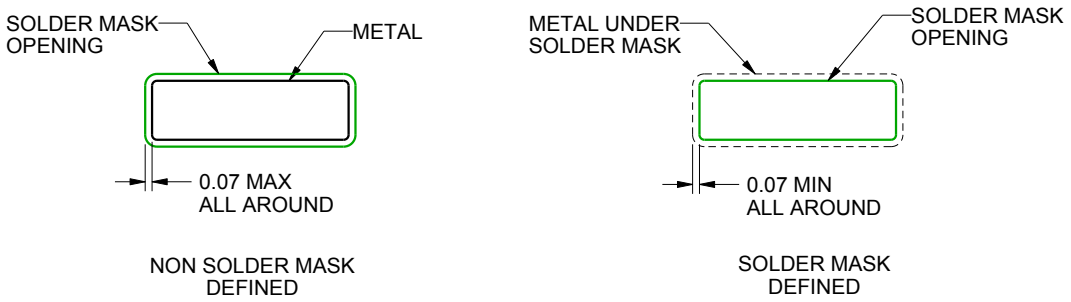

SOLDER MASK DETAILS

4220724/A 05/2016

NOTES: (continued)

6. Publication IPC-7351 may have alternate designs.
7. Solder mask tolerances between and around signal pads can vary based on board fabrication site.

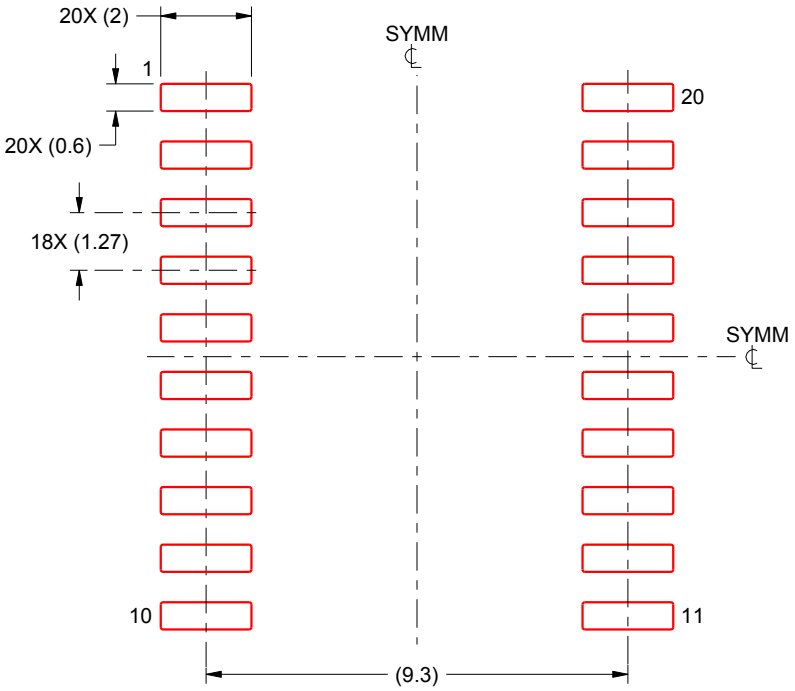

SOLDER PASTE EXAMPLE
BASED ON 0.125 mm THICK STENCIL
SCALE:6X

4220724/A 05/2016

NOTES: (continued)

8. Laser cutting apertures with trapezoidal walls and rounded corners may offer better paste release. IPC-7525 may have alternate design recommendations.
9. Board assembly site may have different recommendations for stencil design.

IMPORTANT NOTICE AND DISCLAIMER

TI PROVIDES TECHNICAL AND RELIABILITY DATA (INCLUDING DATA SHEETS), DESIGN RESOURCES (INCLUDING REFERENCE DESIGNS), APPLICATION OR OTHER DESIGN ADVICE, WEB TOOLS, SAFETY INFORMATION, AND OTHER RESOURCES “AS IS” AND WITH ALL FAULTS, AND DISCLAIMS ALL WARRANTIES, EXPRESS AND IMPLIED, INCLUDING WITHOUT LIMITATION ANY IMPLIED WARRANTIES OF MERCHANTABILITY, FITNESS FOR A PARTICULAR PURPOSE OR NON-INFRINGEMENT OF THIRD PARTY INTELLECTUAL PROPERTY RIGHTS.

These resources are intended for skilled developers designing with TI products. You are solely responsible for (1) selecting the appropriate TI products for your application, (2) designing, validating and testing your application, and (3) ensuring your application meets applicable standards, and any other safety, security, regulatory or other requirements.

These resources are subject to change without notice. TI grants you permission to use these resources only for development of an application that uses the TI products described in the resource. Other reproduction and display of these resources is prohibited. No license is granted to any other TI intellectual property right or to any third party intellectual property right. TI disclaims responsibility for, and you will fully indemnify TI and its representatives against, any claims, damages, costs, losses, and liabilities arising out of your use of these resources.

TI’s products are provided subject to TI’s Terms of Sale or other applicable terms available either on ti.com or provided in conjunction with such TI products. TI’s provision of these resources does not expand or otherwise alter TI’s applicable warranties or warranty disclaimers for TI products.

TI objects to and rejects any additional or different terms you may have proposed.

Mailing Address: Texas Instruments, Post Office Box 655303, Dallas, Texas 75265
Copyright © 2025, Texas Instruments Incorporated