- **RS-232 Bus-Pin ESD Protection Exceeds ±15 kV Using Human-Body Model (HBM)**
- **Meets or Exceeds the Requirements of TIA/EIA-232-F and ITU v.28 Standards**
- **Operates With 3-V to 5.5-V V_{CC} Supply**
- **Operates Up To 250 kbit/s**
- **Two Drivers and Two Receivers**
- **Low Standby Current . . . 1 μA Typical**
- **External Capacitors . . . 4 × 0.1 μF**
- **Accepts 5-V Logic Input With 3.3-V Supply**
- **Alternative High-Speed Pin-Compatible Device (1 Mbit/s)**
  - **SNx5C3223**
- **Applications**
  - **Battery-Powered Systems, PDAs, Notebooks, Laptops, Palmtop PCs, and Hand-Held Equipment**

DB, DW, OR PW PACKAGE
(TOP VIEW)

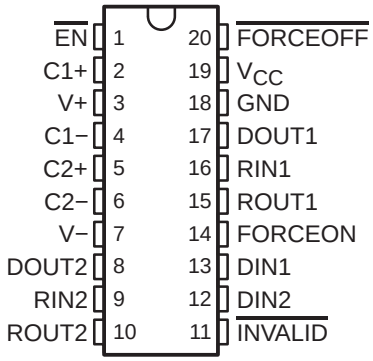

description/ordering information

The MAX3223 consists of two line drivers, two line receivers, and a dual charge-pump circuit with ±15-kV ESD protection pin to pin (serial-port connection pins, including GND). The device meets the requirements of TIA/EIA-232-F and provides the electrical interface between an asynchronous communication controller and the serial-port connector. The charge pump and four small external capacitors allow operation from a single 3-V to 5.5-V supply. The device operates at data signaling rates up to 250 kbit/s and a maximum of 30-V/μs driver output slew rate.

ORDERING INFORMATION

T_A	PACKAGE†		ORDERABLE PART NUMBER	TOP-SIDE MARKING
−0°C to 70°C	SOIC (DW)	Tube of 25	MAX3223CDW	MAX3223C
		Reel of 2000	MAX3223CDWR	
	SSOP (DB)	Tube of 70	MAX3223CDB	MA3223C
		Reel of 2000	MAX3223CDBR	
	TSSOP (PW)	Tube of 70	MAX3223CPW	MA3223C
		Reel of 2000	MAX3223CPWR	
−40°C to 85°C	SOIC (DW)	Tube of 25	MAX3223IDW	MAX3223I
		Reel of 2000	MAX3223IDWR	
	SSOP (DB)	Tube of 70	MAX3223IDB	MB3223I
		Reel of 2000	MAX3223IDBR	
	TSSOP (PW)	Tube of 70	MAX3223IPW	MB3223I
		Reel of 2000	MAX3223IPWR	

† Package drawings, standard packing quantities, thermal data, symbolization, and PCB design guidelines are available at www.ti.com/sc/package.

Please be aware that an important notice concerning availability, standard warranty, and use in critical applications of Texas Instruments semiconductor products and disclaimers thereto appears at the end of this data sheet.

PRODUCTION DATA information is current as of publication date. Products conform to specifications per the terms of Texas Instruments standard warranty. Production processing does not necessarily include testing of all parameters.

Copyright © 2004, Texas Instruments Incorporated

description/ordering information (continued)

Flexible control options for power management are available when the serial port is inactive. The auto-powerdown feature functions when FORCEON is low and $\overline{\text{FORCEOFF}}$ is high. During this mode of operation, if the device does not sense a valid RS-232 signal, the driver outputs are disabled. If $\overline{\text{FORCEOFF}}$ is set low and $\overline{\text{EN}}$ is high, both drivers and receivers are shut off, and the supply current is reduced to 1 µA. Disconnecting the serial port or turning off the peripheral drivers causes auto-powerdown to occur. Auto-powerdown can be disabled when FORCEON and $\overline{\text{FORCEOFF}}$ are high. With auto-powerdown enabled, the device is activated automatically when a valid signal is applied to any receiver input. The $\overline{\text{INVALID}}$ output is used to notify the user if an RS-232 signal is present at any receiver input. $\overline{\text{INVALID}}$ is high (valid data) if any receiver input voltage is greater than 2.7 V or less than −2.7 V, or has been between −0.3 V and 0.3 V for less than 30 µs. $\overline{\text{INVALID}}$ is low (invalid data) if the receiver input voltage is between −0.3 V and 0.3 V for more than 30 µs. Refer to Figure 4 for receiver input levels.

Function Tables

EACH DRIVER

INPUTS				OUTPUT DOUT	DRIVER STATUS
DIN	FORCEON	$\overline{\text{FORCEOFF}}$	VALID RIN RS-232 LEVEL		
X	X	L	X	Z	Powered off
L	H	H	X	H	Normal operation with auto-powerdown disabled
H	H	H	X	L	
L	L	H	Yes	H	Normal operation with auto-powerdown enabled
H	L	H	Yes	L	
L	L	H	No	Z	Powered off by auto-powerdown feature
H	L	H	No	Z	

H = high level, L = low level, X = irrelevant, Z = high impedance

EACH RECEIVER

INPUTS			OUTPUT ROUT
RIN	$\overline{\text{EN}}$	VALID RIN RS-232 LEVEL	
L	L	X	H
H	L	X	L
X	H	X	Z
Open	L	No	H

H = high level, L = low level, X = irrelevant, Z = high impedance (off), Open = input disconnected or connected driver off

logic diagram (positive logic)

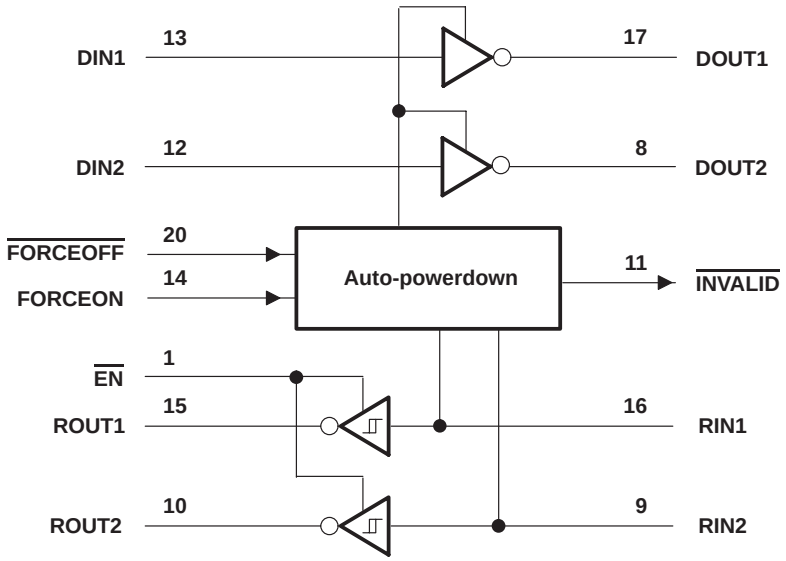

absolute maximum ratings over operating free-air temperature range (unless otherwise noted)†

Supply voltage range, V_{CC} (see Note 1)	−0.3 V to 6 V
Positive output supply voltage range, V+ (see Note 1)	−0.3 V to 7 V
Negative output supply voltage range, V− (see Note 1)	0.3 V to −7 V
Supply voltage difference, V+ − V− (see Note 1)	13 V
Input voltage range, V_I: Driver, $\overline{\text{FORCEOFF}}$, FORCEON, $\overline{\text{EN}}$	−0.3 V to 6 V
Receiver	−25 V to 25 V
Output voltage range, V_O: Driver	−13.2 V to 13.2 V
Receiver, $\overline{\text{INVALID}}$	−0.3 V to V_{CC} + 0.3 V
Package thermal impedance, θ_{JA} (see Notes 2 and 3): DB package	70°C/W
DW package	58°C/W
PW package	83°C/W
Operating virtual junction temperature, T_J	150°C
Storage temperature range, T_{stg}	−65°C to 150°C

† Stresses beyond those listed under “absolute maximum ratings” may cause permanent damage to the device. These are stress ratings only, and functional operation of the device at these or any other conditions beyond those indicated under “recommended operating conditions” is not implied. Exposure to absolute-maximum-rated conditions for extended periods may affect device reliability.

NOTES:
1. All voltages are with respect to network GND.
2. Maximum power dissipation is a function of $T_J(max)$, θ_{JA}, and T_A. The maximum allowable power dissipation at any allowable ambient temperature is $P_D = (T_J(max) - T_A)/\theta_{JA}$. Operating at the absolute maximum T_J of 150°C can affect reliability.
3. The package thermal impedance is calculated in accordance with JESD 51-7.

recommended operating conditions (see Note 4 and Figure 6)

				MIN	NOM	MAX	UNIT
	Supply voltage		V_{CC} = 3.3 V	3	3.3	3.6	V
			V_{CC} = 5 V	4.5	5	5.5	
V_{IH}	Driver and control high-level input voltage	DIN, $\overline{EN}$, $\overline{FORCEOFF}$, FORCEON	V_{CC} = 3.3 V	2			V
			V_{CC} = 5 V	2.4			
V_{IL}	Driver and control low-level input voltage	DIN, $\overline{EN}$, $\overline{FORCEOFF}$, FORCEON				0.8	V
V_I	Driver and control input voltage	DIN, $\overline{EN}$, $\overline{FORCEOFF}$, FORCEON		0		5.5	V
	Receiver input voltage			−25		25	
T_A	Operating free-air temperature		MAX3223C	0		70	°C
			MAX3223I	−40		85	

NOTE 4: Test conditions are C1−C4 = 0.1 µF at V_{CC} = 3.3 V ± 0.3 V; C1 = 0.047 µF, C2−C4 = 0.33 µF at V_{CC} = 5 V ± 0.5 V.

electrical characteristics over recommended ranges of supply voltage and operating free-air temperature (unless otherwise noted) (see Note 4 and Figure 6)

PARAMETER			TEST CONDITIONS		MIN	TYP†	MAX	UNIT
I_I	Input leakage current	$\overline{EN}$, $\overline{FORCEOFF}$, FORCEON				±0.01	±1	µA
I_{CC}	Supply current	Auto-powerdown disabled	V_{CC} = 3.3 V or 5 V, T_A = 25°C	No load, $\overline{FORCEOFF}$ and FORCEON at V_{CC}		0.3	1	mA
		Powered off		No load, $\overline{FORCEOFF}$ at GND		1	10	µA
		Auto-powerdown enabled		No load, $\overline{FORCEOFF}$ at V_{CC}, FORCEON at GND, All RIN are open or grounded		1	10	

† All typical values are at V_{CC} = 3.3 V or V_{CC} = 5 V, and T_A = 25°C.
NOTE 4: Test conditions are C1−C4 = 0.1 µF at V_{CC} = 3.3 V ± 0.3 V; C1 = 0.047 µF, C2−C4 = 0.33 µF at V_{CC} = 5 V ± 0.5 V.

DRIVER SECTION

electrical characteristics over recommended ranges of supply voltage and operating free-air temperature (unless otherwise noted) (see Note 4 and Figure 6)

PARAMETER		TEST CONDITIONS		MIN	TYP†	MAX	UNIT
V_{OH}	High-level output voltage	DOUT at R_L = 3 kΩ to GND		5	5.4		V
V_{OL}	Low-level output voltage	DOUT at R_L = 3 kΩ to GND		−5	−5.4		V
I_{IH}	High-level input current	$V_I = V_{CC}$			±0.01	±1	µA
I_{IL}	Low-level input current	V_I at GND			±0.01	±1	µA
I_{OS}	Short-circuit output current‡	V_{CC} = 3.6 V,	V_O = 0 V		±35	±60	mA
		V_{CC} = 5.5 V,	V_O = 0 V		±35	±60	
r_o	Output resistance	V_{CC}, V+, and V− = 0 V,	V_O = ±2 V	300	10M		Ω
I_{off}	Output leakage current	$\overline{\text{FORCEOFF}}$ = GND	V_O = ±12 V, V_{CC} = 3 V to 3.6 V			±25	µA
			V_O = ±10 V, V_{CC} = 4.5 V to 5.5 V			±25	

† All typical values are at V_{CC} = 3.3 V or V_{CC} = 5 V, and T_A = 25°C.
‡ Short-circuit durations should be controlled to prevent exceeding the device absolute power-dissipation ratings, and not more than one output should be shorted at a time.
NOTE 4: Test conditions are C1−C4 = 0.1 µF at V_{CC} = 3.3 V ± 0.3 V; C1 = 0.047 µF, C2−C4 = 0.33 µF at V_{CC} = 5 V ± 0.5 V.

switching characteristics over recommended ranges of supply voltage and operating free-air temperature (unless otherwise noted) (see Note 4 and Figure 6)

PARAMETER		TEST CONDITIONS		MIN	TYP†	MAX	UNIT
	Maximum data rate	C_L = 1000 pF, One DOUT switching,	R_L = 3 kΩ, See Figure 1	250			kbit/s
$t_{sk(p)}$	Pulse skew§	C_L = 150 pF to 2500 pF, See Figure 2	R_L = 3 kΩ to 7 kΩ,		100		ns
SR(tr)	Slew rate, transition region (See Figure 1)	V_{CC} = 3.3 V, R_L = 3 kΩ to 7 kΩ	C_L = 150 pF to 1000 pF	6		30	V/µs
			C_L = 150 pF to 2500 pF	4		30	

† All typical values are at V_{CC} = 3.3 V or V_{CC} = 5 V, and T_A = 25°C.
§ Pulse skew is defined as $|t_{PLH} - t_{PHL}|$ of each channel of the same device.
NOTE 4: Test conditions are C1−C4 = 0.1 µF at V_{CC} = 3.3 V ± 0.3 V; C1 = 0.047 µF, C2−C4 = 0.33 µF at V_{CC} = 5 V ± 0.5 V.

RECEIVER SECTION

electrical characteristics over recommended ranges of supply voltage and operating free-air temperature (unless otherwise noted) (see Note 4 and Figure 6)

PARAMETER		TEST CONDITIONS	MIN	TYP†	MAX	UNIT
V_{OH}	High-level output voltage	I_{OH} = −1 mA	V_{CC}−0.6	V_{CC}−0.1		V
V_{OL}	Low-level output voltage	I_{OL} = 1.6 mA			0.4	V
V_{IT+}	Positive-going input threshold voltage	V_{CC} = 3.3 V		1.6	2.4	V
		V_{CC} = 5 V		1.9	2.4	
V_{IT-}	Negative-going input threshold voltage	V_{CC} = 3.3 V	0.6	1.1		V
		V_{CC} = 5 V	0.8	1.4		
V_{hys}	Input hysteresis (V_{IT+} − V_{IT-})			0.5		V
I_{off}	Output leakage current	$\overline{EN}$ = V_{CC}		±0.05	±10	µA
r_i	Input resistance	V_I = ±3 V to ±25 V	3	5	7	kΩ

† All typical values are at V_{CC} = 3.3 V or V_{CC} = 5 V, and T_A = 25°C.
NOTE 4: Test conditions are C1−C4 = 0.1 µF at V_{CC} = 3.3 V ± 0.3 V; C1 = 0.047 µF, C2−C4 = 0.33 µF at V_{CC} = 5 V ± 0.5 V.

switching characteristics over recommended ranges of supply voltage and operating free-air temperature (unless otherwise noted) (see Note 4)

PARAMETER		TEST CONDITIONS		MIN	TYP†	MAX	UNIT
t_{PLH}	Propagation delay time, low- to high-level output	C_L= 150 pF,	See Figure 3		150		ns
t_{PHL}	Propagation delay time, high- to low-level output	C_L= 150 pF,	See Figure 3		150		ns
t_{en}	Output enable time	C_L= 150 pF, See Figure 4	R_L = 3 kΩ,		200		ns
t_{dis}	Output disable time	C_L= 150 pF, See Figure 4	R_L = 3 kΩ,		200		ns
$t_{sk(p)}$	Pulse skew‡	See Figure 3			50		ns

† All typical values are at V_{CC} = 3.3 V or V_{CC} = 5 V, and T_A = 25°C.
‡ Pulse skew is defined as $|t_{PLH} - t_{PHL}|$ of each channel of the same device.
NOTE 4: Test conditions are C1−C4 = 0.1 µF at V_{CC} = 3.3 V ± 0.3 V; C1 = 0.047 µF, C2−C4 = 0.33 µF at V_{CC} = 5 V ± 0.5 V.

AUTO-POWERDOWN SECTION

electrical characteristics over recommended ranges of supply voltage and operating free-air temperature (unless otherwise noted) (see Figure 5)

PARAMETER		TEST CONDITIONS		MIN	MAX	UNIT
$V_{T+(valid)}$	Receiver input threshold for $\overline{\text{INVALID}}$ high-level output voltage	FORCEON = GND,	$\overline{\text{FORCEOFF}}$ = V_{CC}		2.7	V
$V_{T-(valid)}$	Receiver input threshold for $\overline{\text{INVALID}}$ high-level output voltage	FORCEON = GND,	$\overline{\text{FORCEOFF}}$ = V_{CC}	−2.7		V
$V_{T(invalid)}$	Receiver input threshold for $\overline{\text{INVALID}}$ low-level output voltage	FORCEON = GND,	$\overline{\text{FORCEOFF}}$ = V_{CC}	−0.3	0.3	V
V_{OH}	$\overline{\text{INVALID}}$ high-level output voltage	I_{OH} = −1 mA, $\overline{\text{FORCEOFF}}$ = V_{CC}	FORCEON = GND,	V_{CC}−0.6		V
V_{OL}	$\overline{\text{INVALID}}$ low-level output voltage	I_{OL} = 1.6 mA, $\overline{\text{FORCEOFF}}$ = V_{CC}	FORCEON = GND,		0.4	V

switching characteristics over recommended ranges of supply voltage and operating free-air temperature (unless otherwise noted) (see Figure 5)

PARAMETER		TYP†	UNIT
t_{valid}	Propagation delay time, low- to high-level output	1	µs
$t_{invalid}$	Propagation delay time, high- to low-level output	30	µs
t_{en}	Supply enable time	100	µs

† All typical values are at V_{CC} = 3.3 V or V_{CC} = 5 V, and T_A = 25°C.

PARAMETER MEASUREMENT INFORMATION

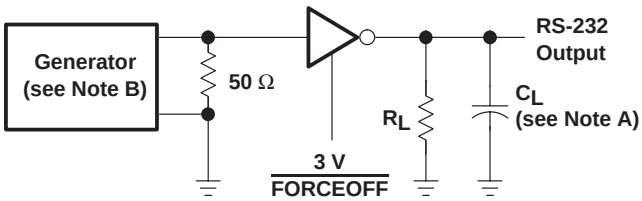

TEST CIRCUIT

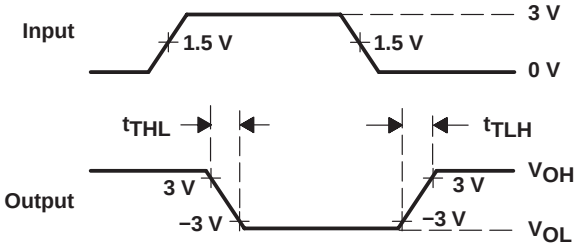

VOLTAGE WAVEFORMS

$$SR(tr) = \frac{6\ V}{t_{THL}\ \text{or}\ t_{TLH}}$$

NOTES: A. C_L includes probe and jig capacitance.
B. The pulse generator has the following characteristics: PRR = 250 kbit/s, Z_O = 50 Ω, 50% duty cycle, $t_r \le 10$ ns, $t_f \le 10$ ns.

Figure 1. Driver Slew Rate

PARAMETER MEASUREMENT INFORMATION

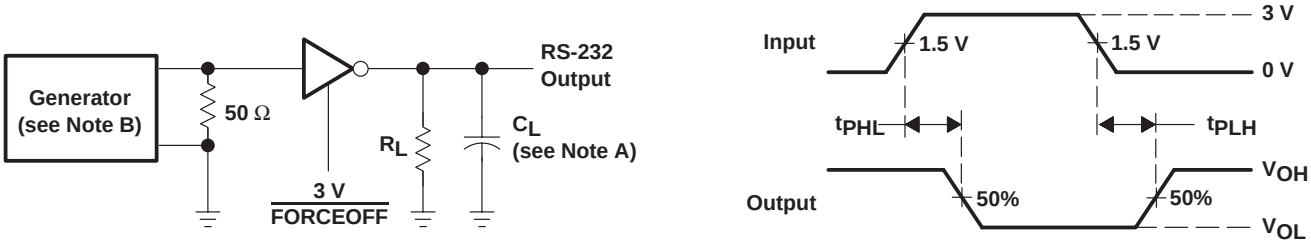

NOTES: A. C_L includes probe and jig capacitance.
B. The pulse generator has the following characteristics: PRR = 250 kbit/s, Z_O = 50 Ω, 50% duty cycle, $t_r \le 10$ ns, $t_f \le 10$ ns.

Figure 2. Driver Pulse Skew

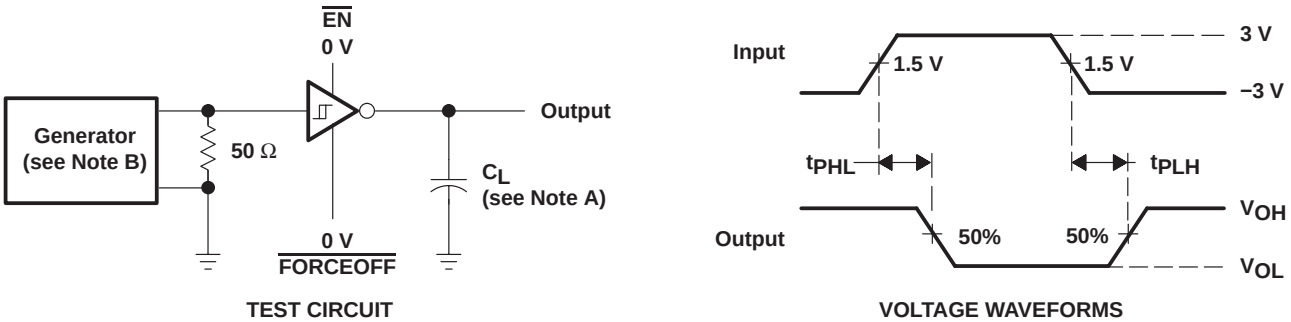

NOTES: A. C_L includes probe and jig capacitance.
B. The pulse generator has the following characteristics: Z_O = 50 Ω, 50% duty cycle, $t_r \le 10$ ns, $t_f \le 10$ ns.

Figure 3. Receiver Propagation Delay Times

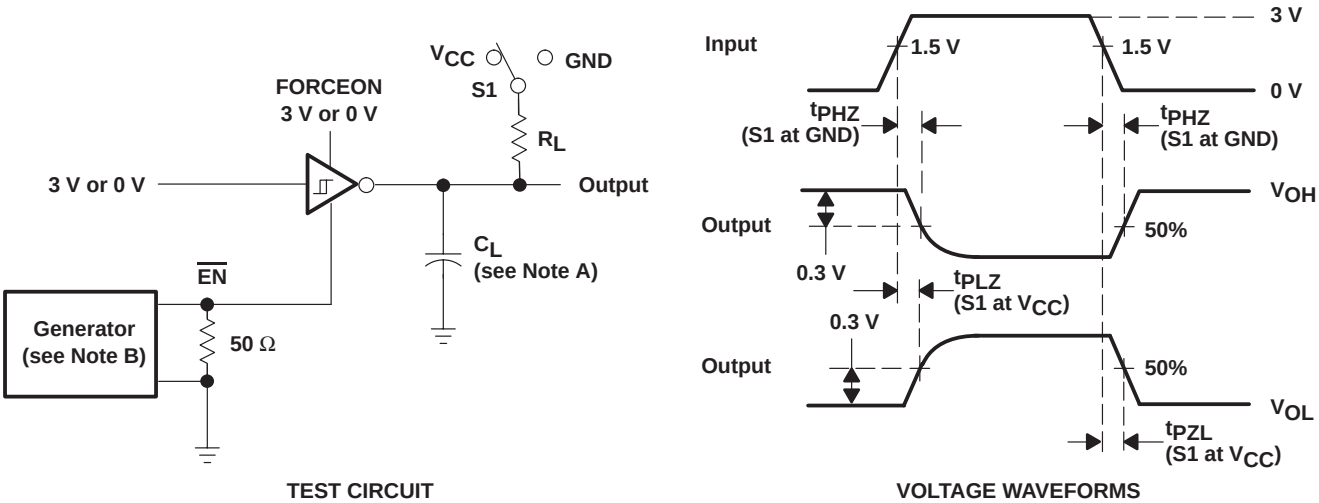

NOTES: A. C_L includes probe and jig capacitance.
B. The pulse generator has the following characteristics: Z_O = 50 Ω, 50% duty cycle, $t_r \le 10$ ns, $t_f \le 10$ ns.

Figure 4. Receiver Enable and Disable Times

PARAMETER MEASUREMENT INFORMATION

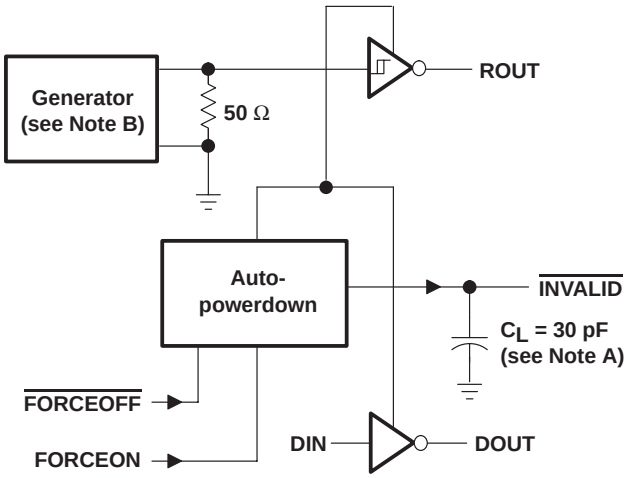

TEST CIRCUIT

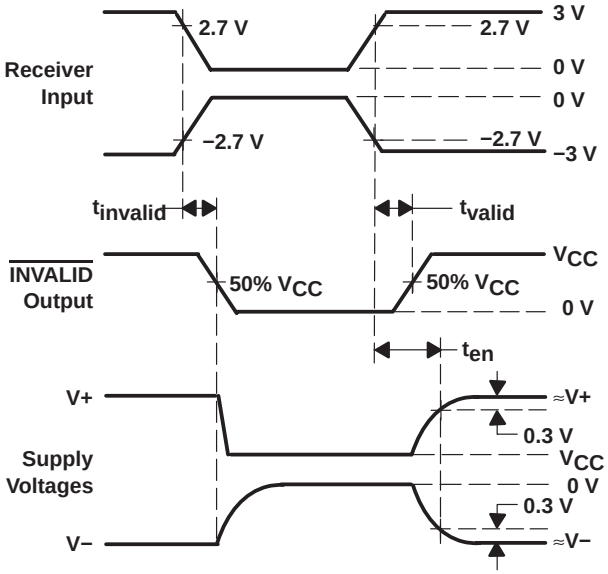

VOLTAGE WAVEFORMS

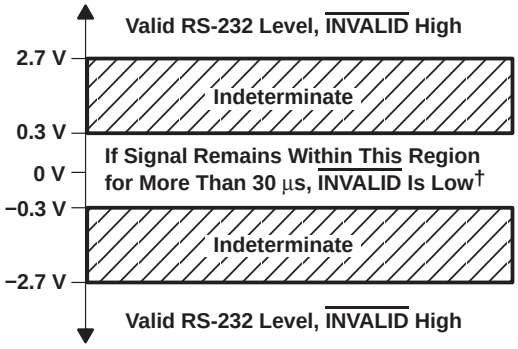

† Auto-powerdown disables drivers and reduces supply current to 1 µA.

NOTES: A. C_L includes probe and jig capacitance.
B. The pulse generator has the following characteristics: PRR = 5 kbit/s, Z_O = 50 Ω, 50% duty cycle, $t_r \leq 10$ ns, $t_f \leq 10$ ns.

Figure 5. INVALID Propagation Delay Times and Supply Enabling Time

APPLICATION INFORMATION

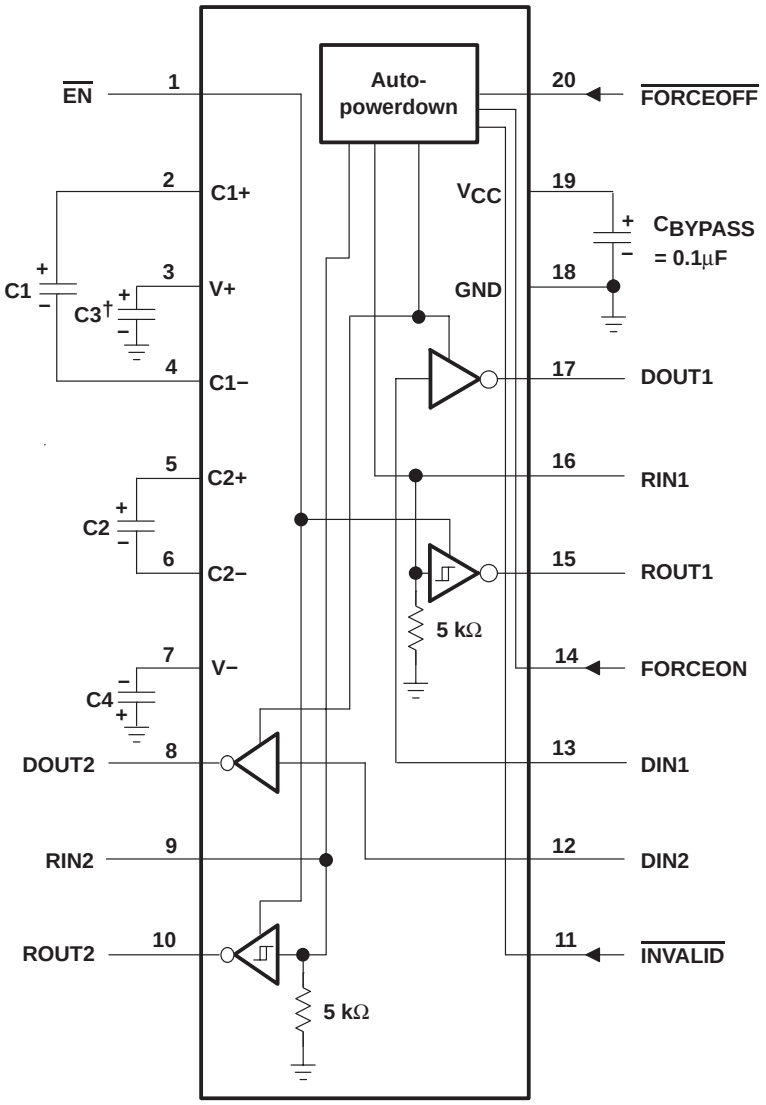

† C3 can be connected to V_{CC} or GND.

NOTES: A. Resistor values shown are nominal.

B. Nonpolarized ceramic capacitors are acceptable. If polarized tantalum or electrolytic capacitors are used, they should be connected as shown.

V_{CC} vs CAPACITOR VALUES

V_{CC}	C1	C2, C3, C4
3.3 V ± 0.3 V	0.1 µF	0.1 µF
5 V ± 0.5 V	0.047 µF	0.33 µF
3 V to 5.5 V	0.1 µF	0.47 µF

Figure 6. Typical Operating Circuit and Capacitor Values

PACKAGING INFORMATION

Orderable part number	Status (1)	Material type (2)	Package | Pins	Package qty | Carrier	RoHS (3)	Lead finish/ Ball material (4)	MSL rating/ Peak reflow (5)	Op temp (°C)	Part marking (6)
MAX3223CDB	Obsolete	Production	SSOP (DB) | 20	-	-	Call TI	Call TI	0 to 70	MA3223C
MAX3223CDBR	Obsolete	Production	SSOP (DB) | 20	-	-	Call TI	Call TI	0 to 70	MA3223C
MAX3223CDW	Active	Production	SOIC (DW) | 20	25 | TUBE	Yes	NIPDAU	Level-1-260C-UNLIM	0 to 70	MAX3223C
MAX3223CDW.A	Active	Production	SOIC (DW) | 20	25 | TUBE	Yes	NIPDAU	Level-1-260C-UNLIM	0 to 70	MAX3223C
MAX3223CDWR	Active	Production	SOIC (DW) | 20	2000 | LARGE T&R	Yes	NIPDAU	Level-1-260C-UNLIM	0 to 70	MAX3223C
MAX3223CDWR.A	Active	Production	SOIC (DW) | 20	2000 | LARGE T&R	Yes	NIPDAU	Level-1-260C-UNLIM	0 to 70	MAX3223C
MAX3223CPW	Obsolete	Production	TSSOP (PW) | 20	-	-	Call TI	Call TI	0 to 70	MA3223C
MAX3223IDB	Obsolete	Production	SSOP (DB) | 20	-	-	Call TI	Call TI	-40 to 85	MB3223I
MAX3223IDBR	Obsolete	Production	SSOP (DB) | 20	-	-	Call TI	Call TI	-40 to 85	MB3223I
MAX3223IDW	Active	Production	SOIC (DW) | 20	25 | TUBE	Yes	NIPDAU	Level-1-260C-UNLIM	-40 to 85	MAX3223I
MAX3223IDW.A	Active	Production	SOIC (DW) | 20	25 | TUBE	Yes	NIPDAU	Level-1-260C-UNLIM	-40 to 85	MAX3223I
MAX3223IDWR	Active	Production	SOIC (DW) | 20	2000 | LARGE T&R	Yes	NIPDAU	Level-1-260C-UNLIM	-40 to 85	MAX3223I
MAX3223IDWR.A	Active	Production	SOIC (DW) | 20	2000 | LARGE T&R	Yes	NIPDAU	Level-1-260C-UNLIM	-40 to 85	MAX3223I
MAX3223IPW	Obsolete	Production	TSSOP (PW) | 20	-	-	Call TI	Call TI	-40 to 85	MB3223I
MAX3223IPWR	Obsolete	Production	TSSOP (PW) | 20	-	-	Call TI	Call TI	-40 to 85	MB3223I

(1) **Status:** For more details on status, see our product life cycle.

(2) **Material type:** When designated, preproduction parts are prototypes/experimental devices, and are not yet approved or released for full production. Testing and final process, including without limitation quality assurance, reliability performance testing, and/or process qualification, may not yet be complete, and this item is subject to further changes or possible discontinuation. If available for ordering, purchases will be subject to an additional waiver at checkout, and are intended for early internal evaluation purposes only. These items are sold without warranties of any kind.

(3) **RoHS values:** Yes, No, RoHS Exempt. See the TI RoHS Statement for additional information and value definition.

(4) **Lead finish/Ball material:** Parts may have multiple material finish options. Finish options are separated by a vertical ruled line. Lead finish/Ball material values may wrap to two lines if the finish value exceeds the maximum column width.

(5) **MSL rating/Peak reflow:** The moisture sensitivity level ratings and peak solder (reflow) temperatures. In the event that a part has multiple moisture sensitivity ratings, only the lowest level per JEDEC standards is shown. Refer to the shipping label for the actual reflow temperature that will be used to mount the part to the printed circuit board.

(6) **Part marking:** There may be an additional marking, which relates to the logo, the lot trace code information, or the environmental category of the part.

Multiple part markings will be inside parentheses. Only one part marking contained in parentheses and separated by a "~" will appear on a part. If a line is indented then it is a continuation of the previous line and the two combined represent the entire part marking for that device.

Important Information and Disclaimer: The information provided on this page represents TI's knowledge and belief as of the date that it is provided. TI bases its knowledge and belief on information provided by third parties, and makes no representation or warranty as to the accuracy of such information. Efforts are underway to better integrate information from third parties. TI has taken and continues to take reasonable steps to provide representative and accurate information but may not have conducted destructive testing or chemical analysis on incoming materials and chemicals. TI and TI suppliers consider certain information to be proprietary, and thus CAS numbers and other limited information may not be available for release.

In no event shall TI's liability arising out of such information exceed the total purchase price of the TI part(s) at issue in this document sold by TI to Customer on an annual basis.

OTHER QUALIFIED VERSIONS OF MAX3223 :

- Enhanced Product : MAX3223-EP

NOTE: Qualified Version Definitions:

- Enhanced Product - Supports Defense, Aerospace and Medical Applications

TAPE AND REEL INFORMATION

REEL DIMENSIONS

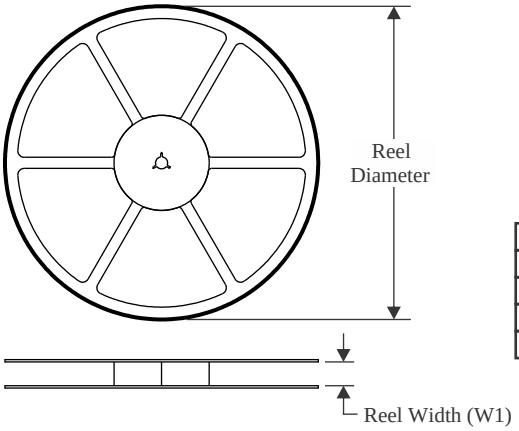

TAPE DIMENSIONS

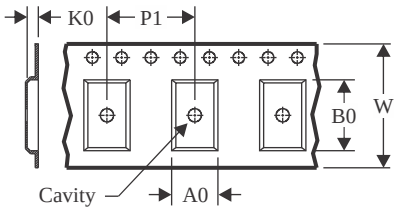

A0	Dimension designed to accommodate the component width
B0	Dimension designed to accommodate the component length
K0	Dimension designed to accommodate the component thickness
W	Overall width of the carrier tape
P1	Pitch between successive cavity centers

QUADRANT ASSIGNMENTS FOR PIN 1 ORIENTATION IN TAPE

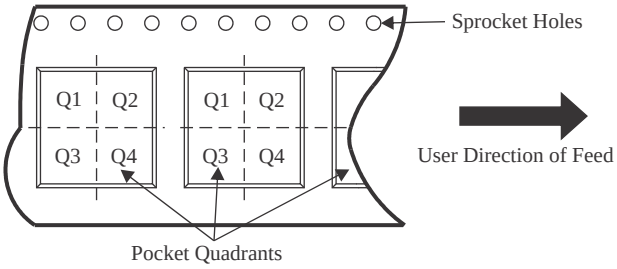

*All dimensions are nominal

Device	Package Type	Package Drawing	Pins	SPQ	Reel Diameter (mm)	Reel Width W1 (mm)	A0 (mm)	B0 (mm)	K0 (mm)	P1 (mm)	W (mm)	Pin1 Quadrant
MAX3223CDWR	SOIC	DW	20	2000	330.0	24.4	10.8	13.3	2.7	12.0	24.0	Q1
MAX3223IDWR	SOIC	DW	20	2000	330.0	24.4	10.8	13.3	2.7	12.0	24.0	Q1

TAPE AND REEL BOX DIMENSIONS

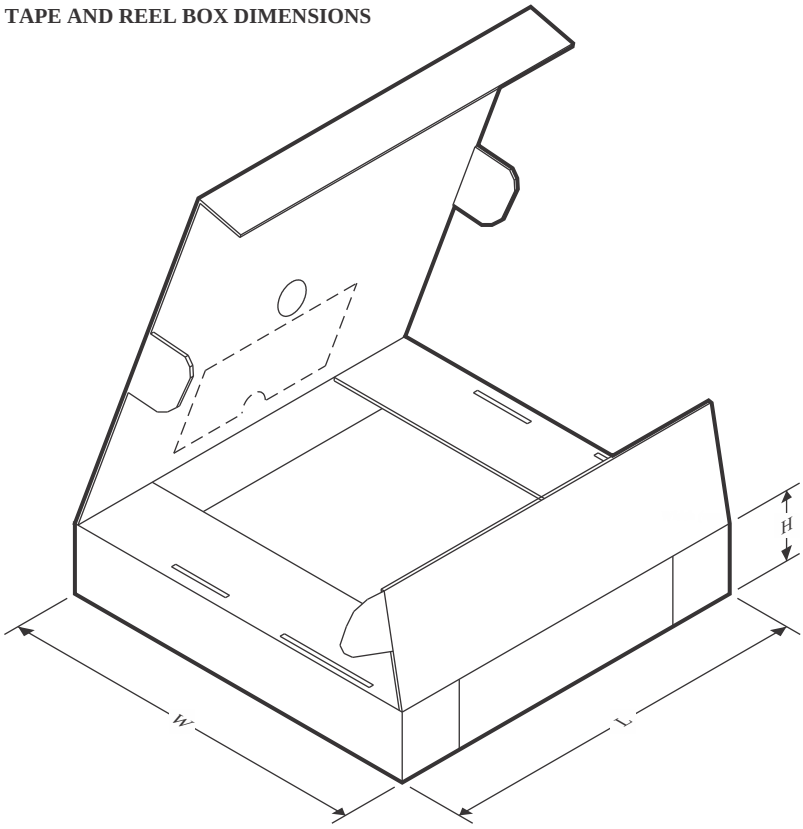

*All dimensions are nominal

Device	Package Type	Package Drawing	Pins	SPQ	Length (mm)	Width (mm)	Height (mm)
MAX3223CDWR	SOIC	DW	20	2000	367.0	367.0	45.0
MAX3223IDWR	SOIC	DW	20	2000	367.0	367.0	45.0

TUBE

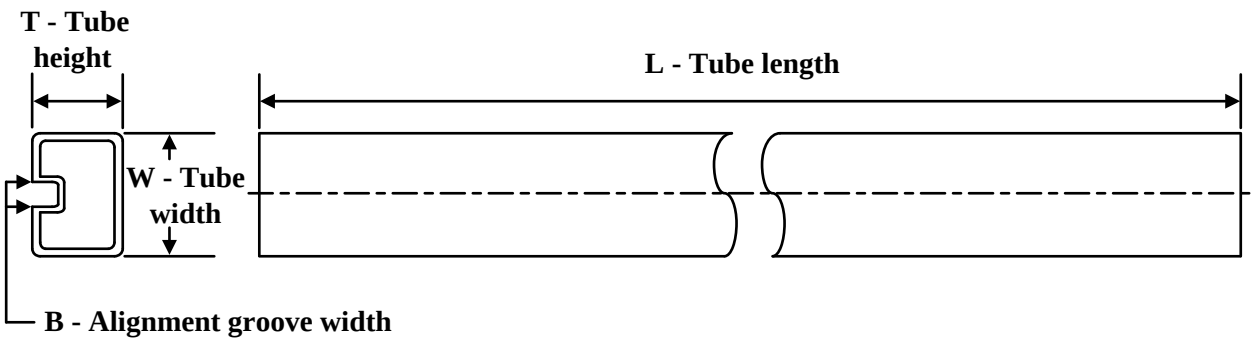

*All dimensions are nominal

Device	Package Name	Package Type	Pins	SPQ	L (mm)	W (mm)	T (µm)	B (mm)
MAX3223CDW	DW	SOIC	20	25	507	12.83	5080	6.6
MAX3223CDW.A	DW	SOIC	20	25	507	12.83	5080	6.6
MAX3223IDW	DW	SOIC	20	25	507	12.83	5080	6.6
MAX3223IDW.A	DW	SOIC	20	25	507	12.83	5080	6.6

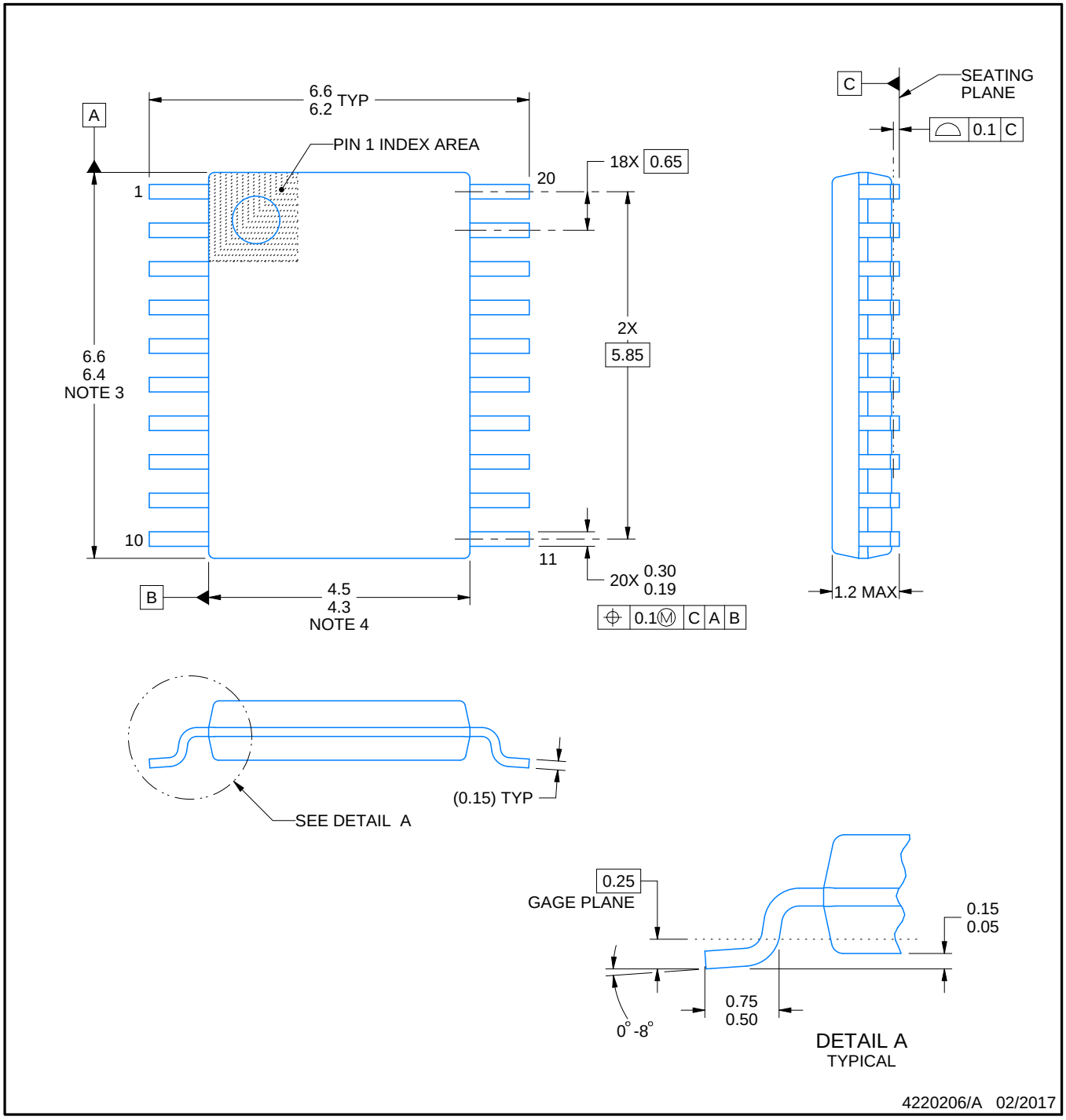

NOTES:

1. All linear dimensions are in millimeters. Any dimensions in parenthesis are for reference only. Dimensioning and tolerancing per ASME Y14.5M.
2. This drawing is subject to change without notice.
3. This dimension does not include mold flash, protrusions, or gate burrs. Mold flash, protrusions, or gate burrs shall not exceed 0.15 mm per side.
4. This dimension does not include interlead flash. Interlead flash shall not exceed 0.25 mm per side.
5. Reference JEDEC registration MO-153.

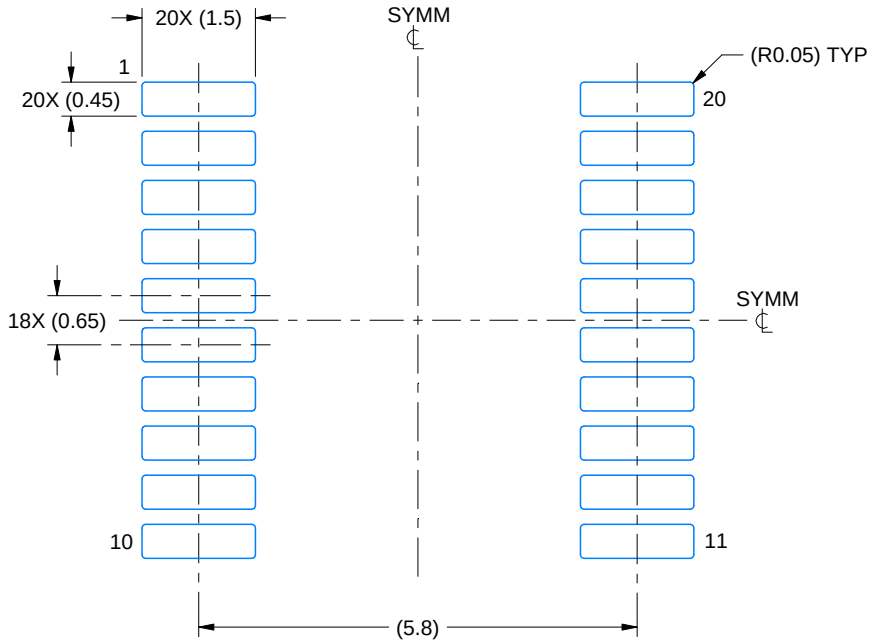

LAND PATTERN EXAMPLE
EXPOSED METAL SHOWN
SCALE: 10X

NON-SOLDER MASK DEFINED (PREFERRED)

SOLDER MASK DEFINED

SOLDER MASK DETAILS

4220206/A 02/2017

NOTES: (continued)

6. Publication IPC-7351 may have alternate designs.
7. Solder mask tolerances between and around signal pads can vary based on board fabrication site.

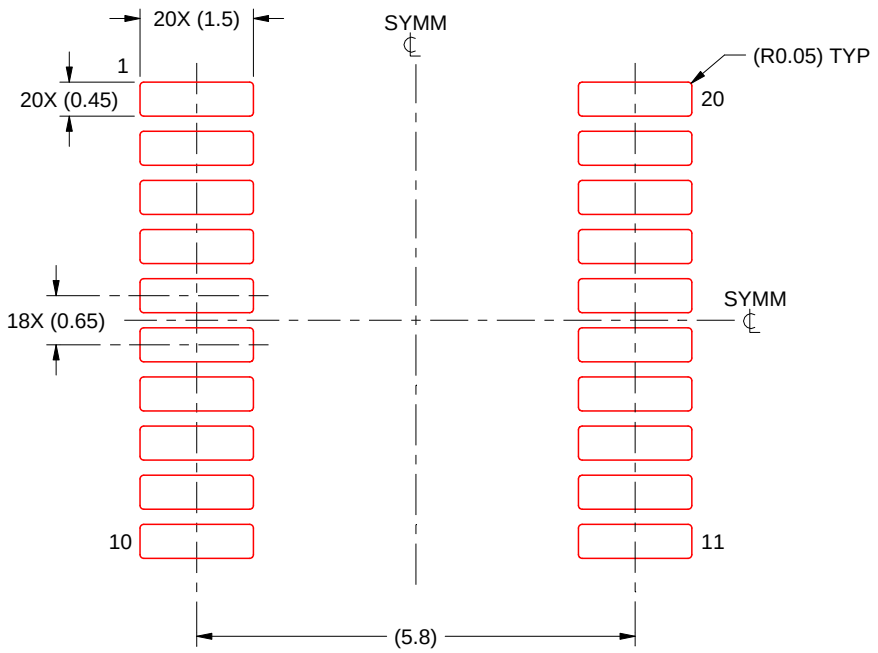

SOLDER PASTE EXAMPLE
BASED ON 0.125 mm THICK STENCIL
SCALE: 10X

4220206/A 02/2017

NOTES: (continued)

8. Laser cutting apertures with trapezoidal walls and rounded corners may offer better paste release. IPC-7525 may have alternate design recommendations.
9. Board assembly site may have different recommendations for stencil design.

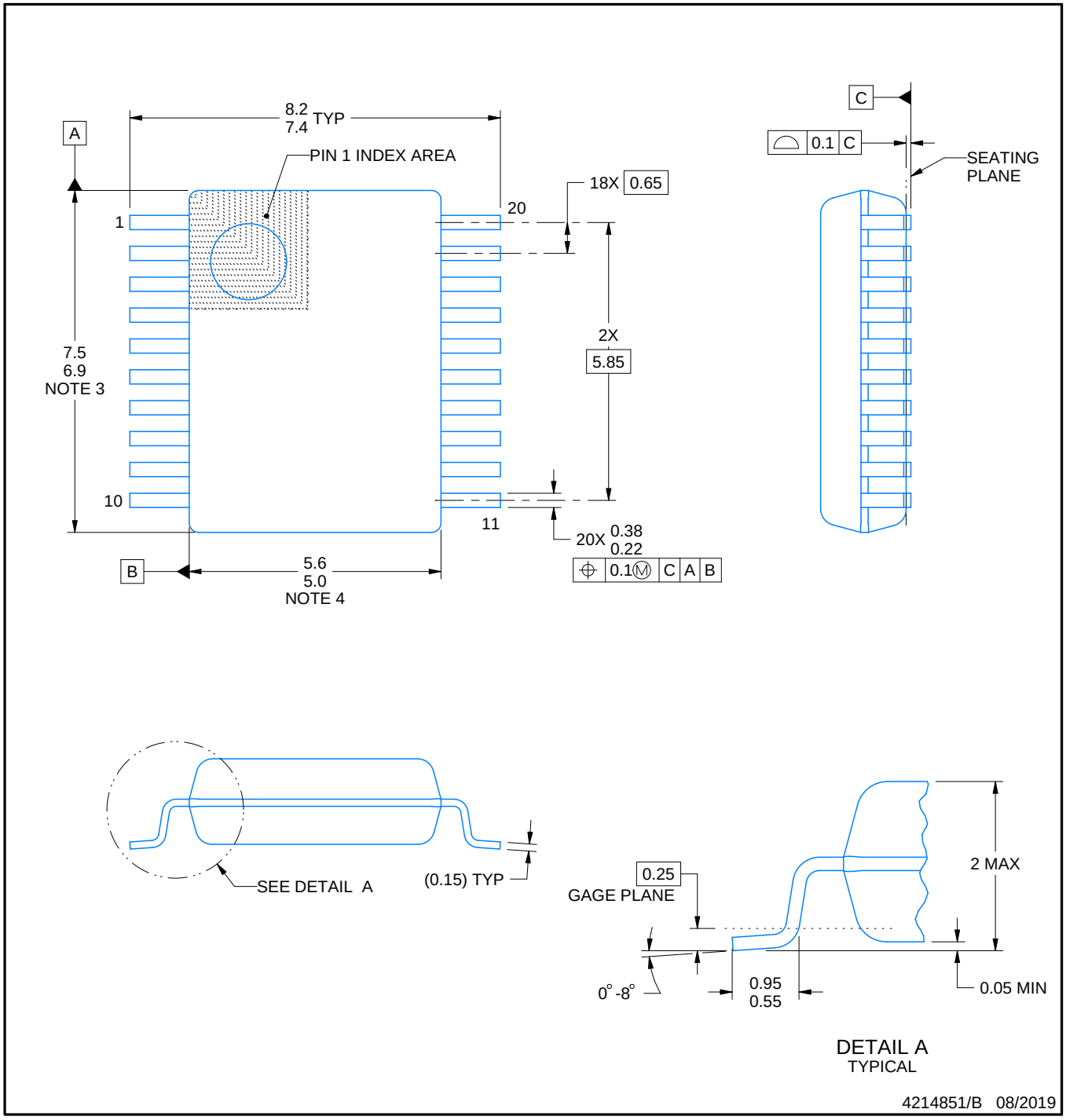

NOTES:

1. All linear dimensions are in millimeters. Any dimensions in parenthesis are for reference only. Dimensioning and tolerancing per ASME Y14.5M.
2. This drawing is subject to change without notice.
3. This dimension does not include mold flash, protrusions, or gate burrs. Mold flash, protrusions, or gate burrs shall not exceed 0.15 mm per side.
4. This dimension does not include interlead flash. Interlead flash shall not exceed 0.25 mm per side.
5. Reference JEDEC registration MO-150.

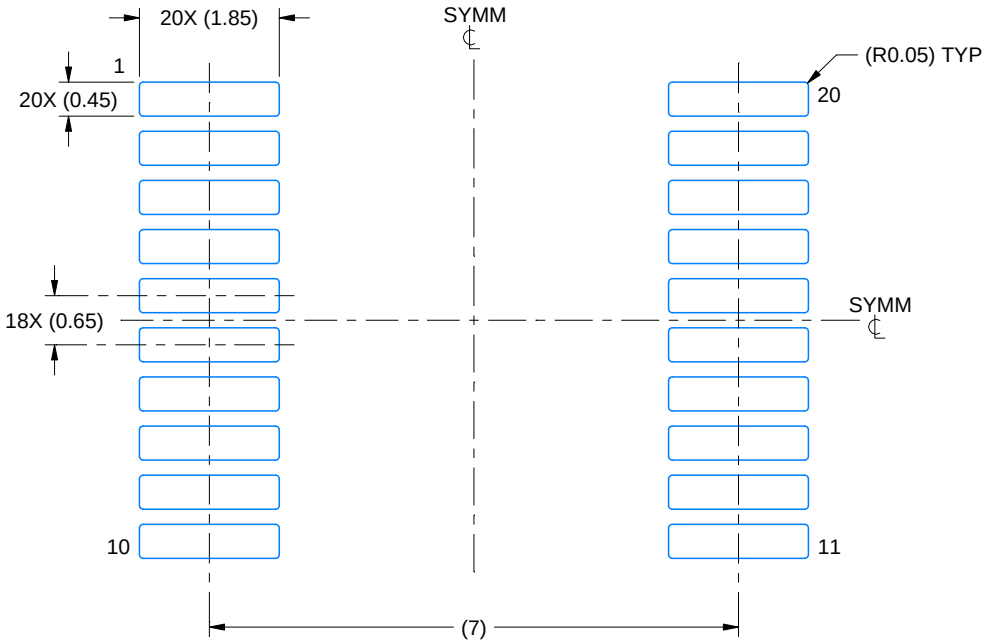

LAND PATTERN EXAMPLE
EXPOSED METAL SHOWN
SCALE: 10X

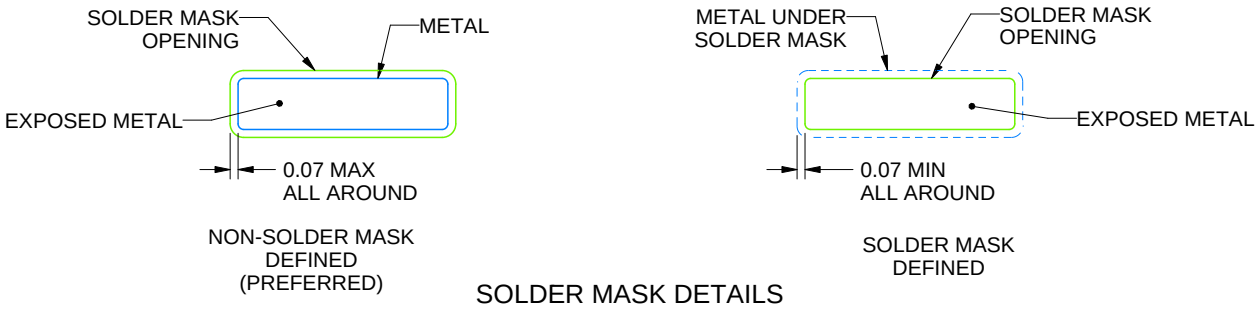

SOLDER MASK DETAILS

4214851/B 08/2019

NOTES: (continued)

6. Publication IPC-7351 may have alternate designs.
7. Solder mask tolerances between and around signal pads can vary based on board fabrication site.

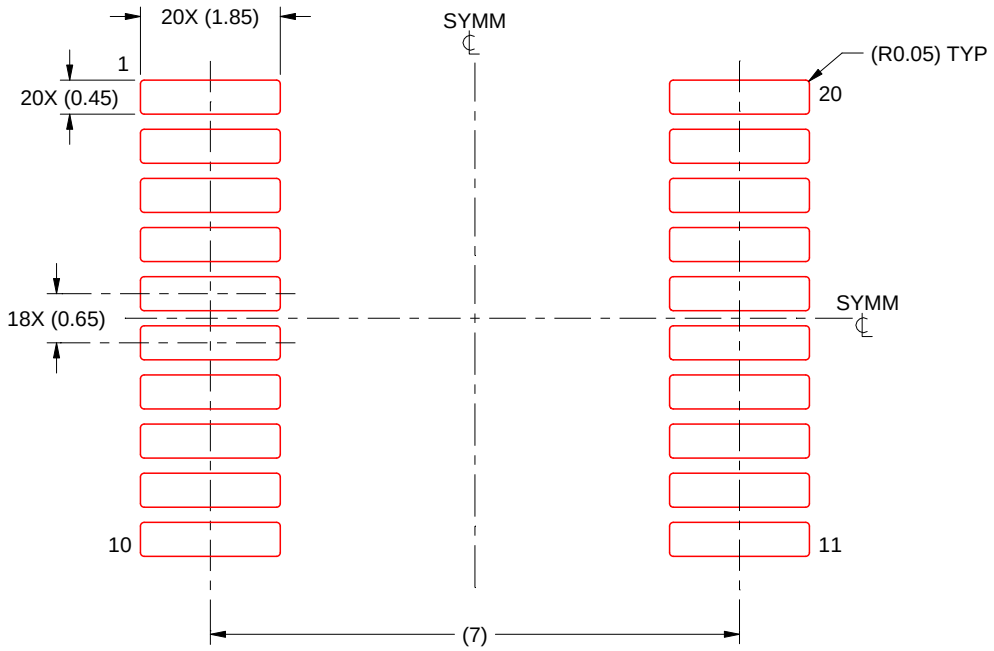

SOLDER PASTE EXAMPLE
BASED ON 0.125 mm THICK STENCIL
SCALE: 10X

4214851/B 08/2019

NOTES: (continued)

8. Laser cutting apertures with trapezoidal walls and rounded corners may offer better paste release. IPC-7525 may have alternate design recommendations.
9. Board assembly site may have different recommendations for stencil design.

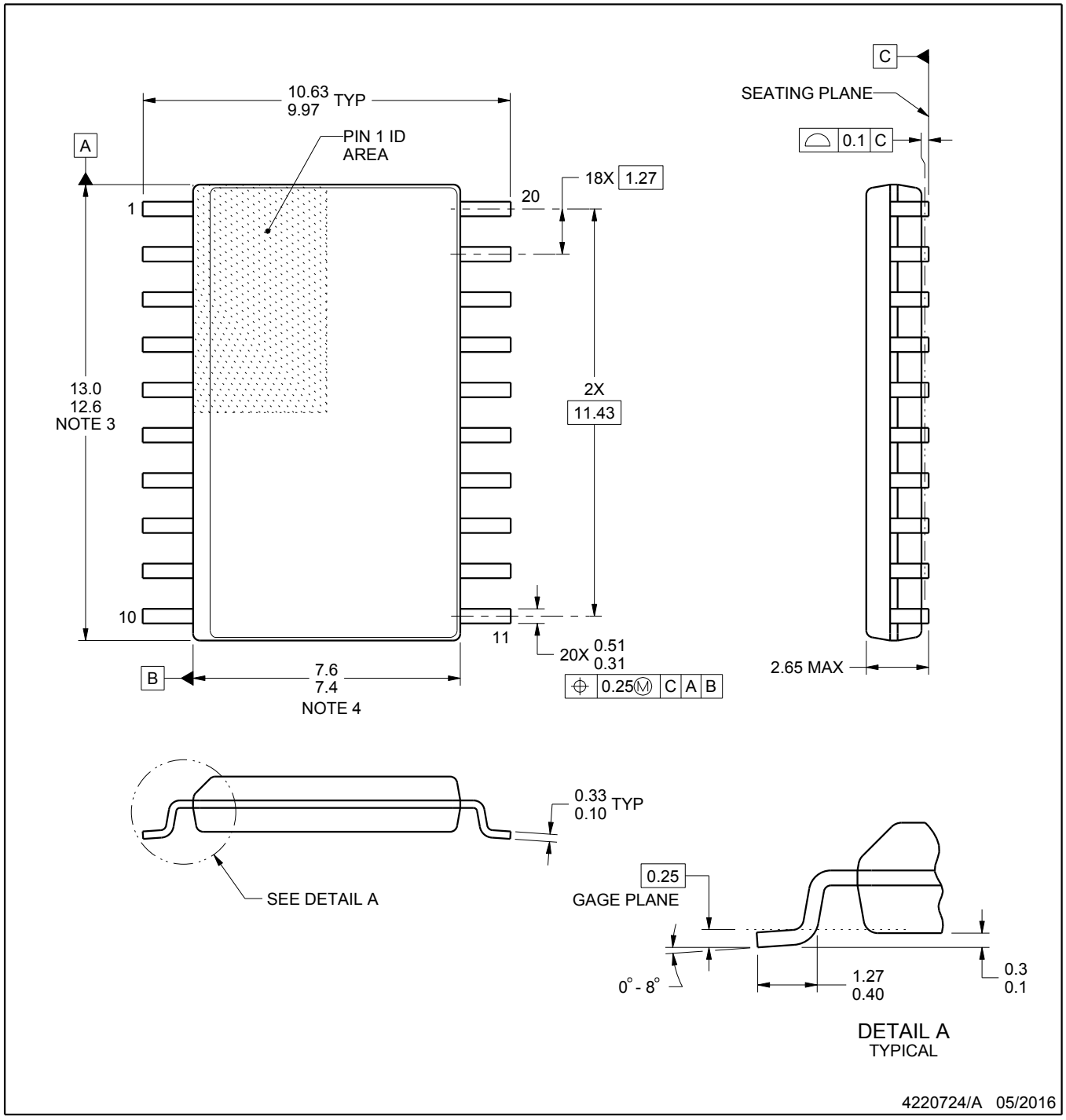

NOTES:

1. All linear dimensions are in millimeters. Dimensions in parenthesis are for reference only. Dimensioning and tolerancing per ASME Y14.5M.
2. This drawing is subject to change without notice.
3. This dimension does not include mold flash, protrusions, or gate burrs. Mold flash, protrusions, or gate burrs shall not exceed 0.15 mm per side.
4. This dimension does not include interlead flash. Interlead flash shall not exceed 0.43 mm per side.
5. Reference JEDEC registration MS-013.

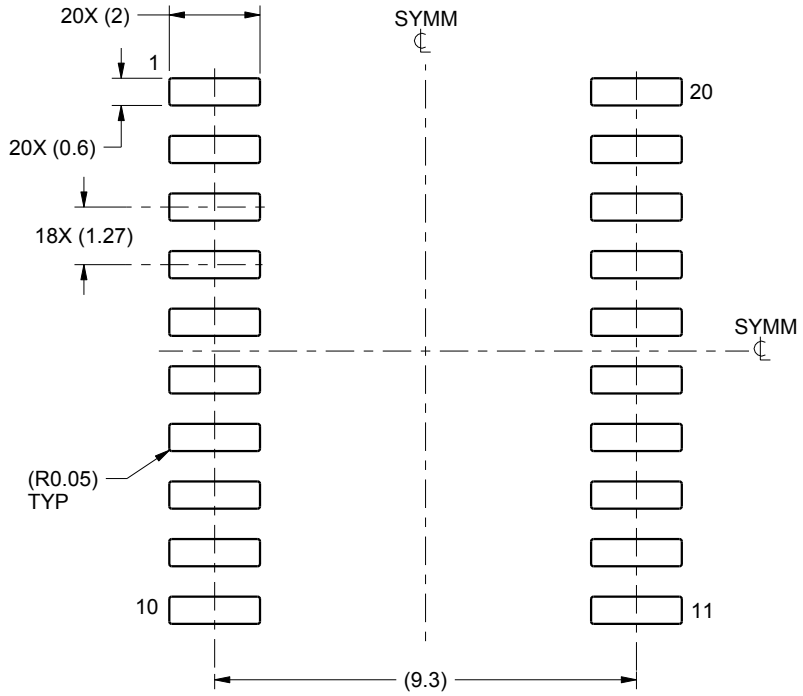

LAND PATTERN EXAMPLE
SCALE:6X

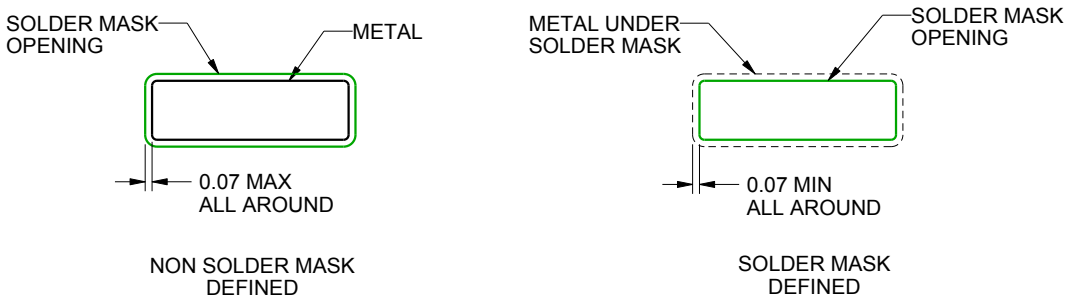

SOLDER MASK DETAILS

4220724/A 05/2016

NOTES: (continued)

6. Publication IPC-7351 may have alternate designs.
7. Solder mask tolerances between and around signal pads can vary based on board fabrication site.

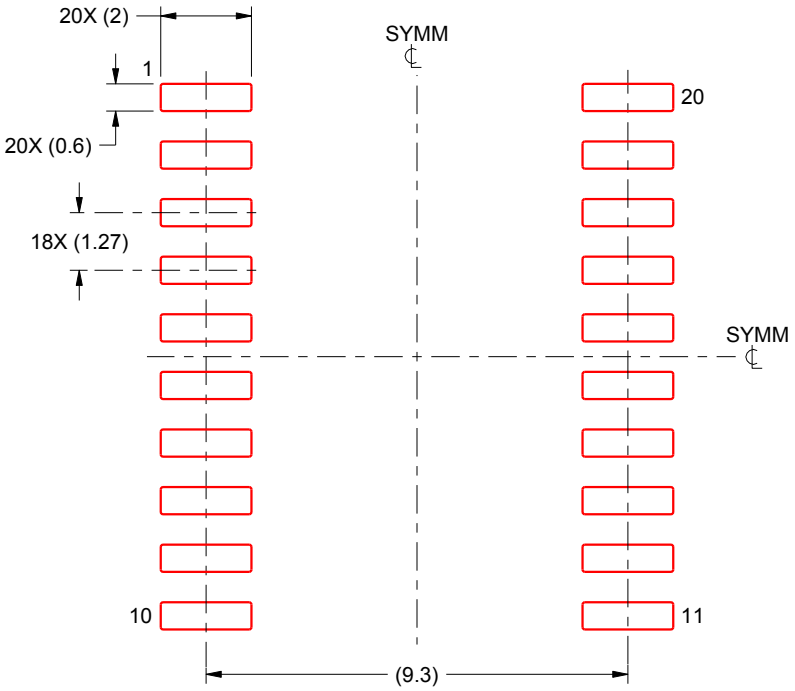

SOLDER PASTE EXAMPLE
BASED ON 0.125 mm THICK STENCIL
SCALE:6X

4220724/A 05/2016

NOTES: (continued)

8. Laser cutting apertures with trapezoidal walls and rounded corners may offer better paste release. IPC-7525 may have alternate design recommendations.
9. Board assembly site may have different recommendations for stencil design.

IMPORTANT NOTICE AND DISCLAIMER

TI PROVIDES TECHNICAL AND RELIABILITY DATA (INCLUDING DATA SHEETS), DESIGN RESOURCES (INCLUDING REFERENCE DESIGNS), APPLICATION OR OTHER DESIGN ADVICE, WEB TOOLS, SAFETY INFORMATION, AND OTHER RESOURCES “AS IS” AND WITH ALL FAULTS, AND DISCLAIMS ALL WARRANTIES, EXPRESS AND IMPLIED, INCLUDING WITHOUT LIMITATION ANY IMPLIED WARRANTIES OF MERCHANTABILITY, FITNESS FOR A PARTICULAR PURPOSE OR NON-INFRINGEMENT OF THIRD PARTY INTELLECTUAL PROPERTY RIGHTS.

These resources are intended for skilled developers designing with TI products. You are solely responsible for (1) selecting the appropriate TI products for your application, (2) designing, validating and testing your application, and (3) ensuring your application meets applicable standards, and any other safety, security, regulatory or other requirements.

These resources are subject to change without notice. TI grants you permission to use these resources only for development of an application that uses the TI products described in the resource. Other reproduction and display of these resources is prohibited. No license is granted to any other TI intellectual property right or to any third party intellectual property right. TI disclaims responsibility for, and you will fully indemnify TI and its representatives against, any claims, damages, costs, losses, and liabilities arising out of your use of these resources.

TI’s products are provided subject to TI’s Terms of Sale or other applicable terms available either on ti.com or provided in conjunction with such TI products. TI’s provision of these resources does not expand or otherwise alter TI’s applicable warranties or warranty disclaimers for TI products.

TI objects to and rejects any additional or different terms you may have proposed.

Mailing Address: Texas Instruments, Post Office Box 655303, Dallas, Texas 75265
Copyright © 2025, Texas Instruments Incorporated