TPS61170-Q1 1.2-A High-Voltage Boost Converter in 2-mm × 2-mm SON Package

1 Features

- Qualified for automotive applications
- Functional Safety-Capable
  - Documentation available to aid functional safety system design
- 3-V to 18-V Input voltage range
- High output voltage: up to 38 V
- 1.2-A Integrated switch
- 1.2-MHz Fixed switching frequency
- 12 V at 300 mA and 24 V at 150 mA from 5-V Input (typical)
- Up to 93% efficiency
- *On-the-fly* output voltage reprogramming
- Skip-switching cycle for output regulation at light load
- Built-in soft start
- 6-Pin, 2-mm × 2-mm SON package

2 Applications

- HEV and EV charger systems
- Advanced driver assistance systems (ADAS)

3 Description

The TPS61170-Q1 is a monolithic, high-voltage switching regulator with integrated 1.2-A, 40-V power MOSFET. The device can be configured in several standard switching-regulator topologies, including boost and SEPIC. The device has a wide input-voltage range to support applications with input voltage from multicell batteries or regulated 5-V, 12-V power rails.

The TPS61170-Q1 operates at a 1.2-MHz switching frequency, allowing the use of low-profile inductors and low-value ceramic input and output capacitors. External loop compensation components give the user flexibility to optimize loop compensation and transient response. The device has built-in protection features, such as pulse-by-pulse overcurrent limit, soft start, and thermal shutdown.

The FB pin regulates to a reference voltage of 1.229 V. The reference voltage can be lowered using a 1-wire digital interface (EasyScale™ protocol) through the CTRL pin. Alternatively, a pulse width-modulation (PWM) signal can be applied to the CTRL pin. The duty cycle of the signal reduces the feedback reference voltage proportionally.

The TPS61170-Q1 is available in a 6-pin 2-mm × 2-mm SON package, allowing a compact power-supply solution.

Device Information(1)

PART NUMBER	PACKAGE	BODY SIZE (NOM)
TPS61170-Q1	SON (6)	2.00 mm × 2.00 mm

(1) For all available packages, see the orderable addendum at the end of the data sheet.

Typical Application

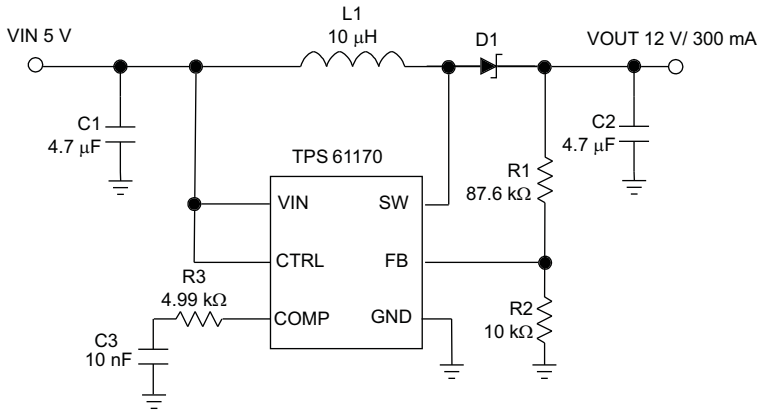

L1: TOKO#A915_Y-100M
C1: Murata GRM188R61A475K
C2: Murata GRM21BR61E475K
D1: ONsemi MBR0540T1
*R3, C3: Compensation RC network

An IMPORTANT NOTICE at the end of this data sheet addresses availability, warranty, changes, use in safety-critical applications, intellectual property matters and other important disclaimers. PRODUCTION DATA.

Table of Contents

1 Features ... 1
2 Applications ... 1
3 Description ... 1
4 Revision History ... 2
5 Pin Configuration and Functions ... 3
6 Specifications ... 3
6.1 Absolute Maximum Ratings ... 3
6.2 ESD Ratings ... 3
6.3 Recommended Operating Conditions ... 4
6.4 Thermal Information ... 4
6.5 Electrical Characteristics ... 4
6.6 Switching Characteristics ... 5
6.7 Typical Characteristics ... 6
7 Detailed Description ... 8
7.1 Overview ... 8
7.2 Functional Block Diagram ... 8
7.3 Feature Description ... 9
7.4 Device Functional Modes ... 9
7.5 Programming ... 13
8 Application and Implementation ... 15
8.1 Application Information ... 15
8.2 Typical Applications ... 15
9 Power Supply Recommendations ... 20
10 Layout ... 21
10.1 Layout Guidelines ... 21
10.2 Layout Example ... 21
10.3 Thermal Considerations ... 21
11 Device and Documentation Support ... 22
11.1 Device Support ... 22
11.2 Documentation Support ... 22
11.3 Support Resources ... 22
11.4 Trademarks ... 22
11.5 Electrostatic Discharge Caution ... 22
11.6 Glossary ... 22
12 Mechanical, Packaging, and Orderable Information ... 22

4 Revision History

NOTE: Page numbers for previous revisions may differ from page numbers in the current version.

Changes from Revision A (June 2015) to Revision B	Page
• Added functional safety bullet to the *Features*	1

Changes from Original (September 2011) to Revision A	Page
• Added *Device Information* table.	1
• Added ESD Ratings table	3
• Added Thermal Information table	4
• Added Feature Description section.	9
• Added Device Functional Modes section	9
• Added Application and Implementation section	15
• Added Power Supply Recommendations section.	20
• Added Layout section.	21
• Added Device and Documentation Support section	22
• Added Mechanical, Packaging, and Orderable Information section	22

Copyright © 2011–2020, Texas Instruments Incorporated

5 Pin Configuration and Functions

DRV Package
6-Pin SON With Exposed Thermal Pad
Top View

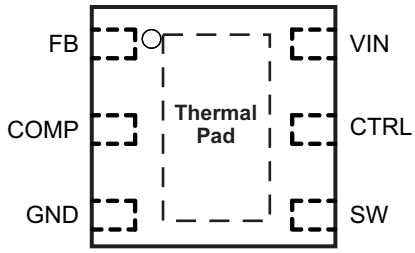

Pin Functions

PIN		I/O	DESCRIPTION
NAME	NO.		
COMP	2	O	Output of the transconductance error amplifier. Connect an external RC network to this pin to compensate the regulator.
CTRL	5	I	Control pin of the boost regulator. CTRL is a multi-functional pin which can be used to enable the device and control the feedback voltage with a PWM signal or for digital communications.
FB	1	I	Feedback pin for current. Connect to the center tap of a resistor divider to program the output voltage.
GND	3	O	Ground
SW	4	I	This is the switching node of the IC. Connect SW to the switched side of the inductor.
VIN	6	I	The input supply pin for the IC. Connect VIN to a supply voltage between 3 V and 18 V.
Thermal Pad		—	The thermal pad should be soldered to the analog ground plane to avoid thermal issue. If possible, use thermal vias to connect to ground plane for ideal power dissipation.

6 Specifications

6.1 Absolute Maximum Ratings

over operating free-air temperature range (unless otherwise noted) (1)

		MIN	MAX	UNIT
V_I	Supply voltages on VIN (2)	–0.3	20	V
	Voltages on CTRL (2)	–0.3	20	
	Voltage on FB and COMP (2)	–0.3	3	
	Voltage on SW (2)	–0.3	40	
P_D	Continuous power dissipation	See *Thermal Information*		
T_J	Operating junction temperature	–40	150	°C
T_{stg}	Storage temperature	–65	150	°C

(1) Stresses beyond those listed under *Absolute Maximum Ratings* may cause permanent damage to the device. These are stress ratings only, and functional operation of the device at these or any other conditions beyond those indicated under *Recommended Operating Conditions* is not implied. Exposure to absolute-maximum-rated conditions for extended periods may affect device reliability.
(2) All voltage values are with respect to network ground terminal.

6.2 ESD Ratings

			VALUE	UNIT
$V_{(ESD)}$	Electrostatic discharge	Human body model (HBM), per ANSI/ESDA/JEDEC JS-001, all pins (1)	±2000	V
		Charged device model (CDM), per JEDEC specification JESD22-C101, all pins — Corner pins (FB, GND, VIN, and SW)	±750	
		Charged device model (CDM), per JEDEC specification JESD22-C101, all pins — Other pins	±500	

(1) AEC Q100-002 indicates that HBM stressing shall be in accordance with the ANSI/ESDA/JEDEC JS-001 specification.

6.3 Recommended Operating Conditions

		MIN	NOM	MAX	UNIT
V_I	Input voltage range, VIN	3		18	V
V_O	Output voltage range	V_{IN}		38	V
L	Inductor(1)	10		22	µH
C_I	Input capacitor	1			µF
C_O	Output capacitor(1)	1		10	µF
T_A	Operating ambient temperature	–40		125	°C
T_J	Operating junction temperature	–40		125	°C

(1) These values are recommended values that have been successfully tested in several applications. Other values may be acceptable in other applications but should be fully tested by the user.

6.4 Thermal Information

THERMAL METRIC(1)		TPS61170-Q1 DRV (SON) 6 PINS	UNIT
$R_{\theta JA}$	Junction-to-ambient thermal resistance	96.1	°C/W
$R_{\theta JC(top)}$	Junction-to-case (top) thermal resistance	89	°C/W
$R_{\theta JB}$	Junction-to-board thermal resistance	65.9	°C/W
ψ_{JT}	Junction-to-top characterization parameter	3.2	°C/W
ψ_{JB}	Junction-to-board characterization parameter	66.3	°C/W
$R_{\theta JC(bot)}$	Junction-to-case (bottom) thermal resistance	40.8	°C/W

(1) For more information about traditional and new thermal metrics, see the *Semiconductor and IC Package Thermal Metrics* application report, SPRA953.

6.5 Electrical Characteristics

VIN = 3.6 V, CTRL = VIN, T_A = –40°C to 125°C, typical values are at T_A = 25°C (unless otherwise noted)

PARAMETER		TEST CONDITIONS	MIN	TYP	MAX	UNIT
SUPPLY CURRENT						
V_I	Input voltage range, VIN		3.0		18	V
I_Q	Operating quiescent current into VIN	Device PWM switching no load			2.3	mA
I_{SD}	Shutdown current	CRTL = GND, VIN = 4.2 V			1	µA
UVLO	Undervoltage lockout threshold	VIN falling		2.2	2.5	V
V_{hys}	Undervoltage lockout Hysteresis			70		mV
ENABLE AND REFERENCE CONTROL						
$V_{(CTRLh)}$	CTRL logic high voltage	VIN = 3 V to 18 V	1.2			V
$V_{(CTRL)}$	CTRL logic low voltage	VIN = 3 V to 18 V			0.4	V
$R_{(CTRL)}$	CTRL pulldown resistor		400	800	1600	kΩ
VOLTAGE AND CURRENT CONTROL						
V_{REF}	Voltage feedback regulation voltage		1.204	1.229	1.254	V
$V_{(REF_PWM)}$	Voltage feedback regulation voltage under reprogram	V_{FB} = 492 mV	477	492	507	mV
I_{FB}	Voltage feedback input bias current	V_{FB} = 1.229 V			200	nA
D_{max}	Maximum duty cycle	V_{FB} = 100 mV	90%	93%		
I_{sink}	Comp pin sink current			100		µA
I_{source}	Comp pin source current			100		µA
G_{ea}	Error amplifier transconductance		240	320	400	µmho
R_{ea}	Error amplifier output resistance	5 pF connected to COMP		6		MΩ

Copyright © 2011–2020, Texas Instruments Incorporated

Electrical Characteristics (continued)

VIN = 3.6 V, CTRL = VIN, T_A = –40°C to 125°C, typical values are at T_A = 25°C (unless otherwise noted)

PARAMETER		TEST CONDITIONS	MIN	TYP	MAX	UNIT
POWER SWITCH						
$R_{DS(on)}$	N-channel MOSFET ON-resistance	VIN = 3.6 V		0.3	0.6	Ω
		VIN = 3.0 V			0.7	
I_{LN_NFET}	N-channel leakage current	V_{SW} = 35 V, T_A = 25°C			1	µA
OC AND SS						
I_{LIM}	N-channel MOSFET current limit	D = D_{max}	0.96	1.2	1.44	A
I_{LIM_Start}	Start-up current limit	D = D_{max}		0.7		A
EasyScale TIMING						
V_{ACKNL}	Acknowledge output voltage low	Open-drain, R_{pullup} =15 kΩ to Vin			0.4	V
THERMAL SHUTDOWN						
$T_{shutdown}$	Thermal shutdown threshold			160		°C
$T_{hysteresis}$	Thermal shutdown threshold hysteresis			15		°C

6.6 Switching Characteristics

VIN = 3.6 V, CTRL = VIN, T_A = –40°C to 125°C, typical values are at T_A = 25°C (unless otherwise noted)

PARAMETER		TEST CONDITIONS	MIN	TYP	MAX	UNIT
ENABLE AND REFERENCE CONTROL						
t_{off}	EasyScale detection time (1)	CTRL high to low	2.5			ms
t_{es_det}	EasyScale detection time (1)	CTRL pin low	260			µs
t_{es_delay}	EasyScale detection delay		100			µs
t_{es_win}	EasyScale detection window time		1			ms
VOLTAGE AND CURRENT CONTROL						
f_S	Oscillator frequency		1	1.2	1.5	MHz
t_{min_on}	Minimum on pulse width			40		ns
f_{ea}	Error amplifier crossover frequency	5 pF connected to COMP		500		kHz
OC AND SS						
t_{Half_LIM}	Time step for half current limit			5		ms
t_{REF}	Vref filter time constant			180		µs
t_{step}	V_{REF} ramp-up time			213		µs
EasyScale TIMING						
t_{start}	Start time of program stream		2			µs
t_{EOS}	End time of program stream		2		360	µs
t_{H_LB}	High time low bit	Logic 0	2		180	µs
t_{L_LB}	Low time low bit	Logic 0	2 × t_{H_LB}		360	µs
t_{H_HB}	High time high bit	Logic 1	2 × t_{L_HB}		360	µs
t_{L_HB}	Low time high bit	Logic 1	2		180	µs
$t_{valACKN}$	Acknowledge valid time	See (2)			2	µs
t_{ACKN}	Duration of acknowledge condition	See (2)			512	µs

(1) EasyScale communication is allowed immediately after the CTRL pin has been low for more than t_{es_det}. To select EasyScale mode, the CTRL pin must be low for more than t_{es_det} the end of t_{es_win}.
(2) Acknowledge condition active 0, this condition will only be applied if the RFA bit is set. Open-drain output, line must be pulled high by the host with resistor load.

6.7 Typical Characteristics

L = TOKO A915_Y-100M, D1 = ONsemi MBR0540T1, unless otherwise noted

Table 1. Table of Graphs

		FIGURE
Efficiency	VIN = 5V; VOUT = 12 V, 18 V, 24 V, 30 V	Figure 17
Efficiency	VIN = 5 V, 8.5 V, 12 V; VOUT = 24 V	Figure 1
Output voltage accuracy	I_{LOAD}= 100 mA	Figure 2
Switch current limit	T_A = 25°C	Figure 3
Switch current limit		Figure 4
Error amplifier transconductance		Figure 5
EasyScale step		Figure 6
PWM switching operation	VIN = 5 V; VOUT = 12 V; I_{LOAD}= 250 mA	Figure 7
Load transient response	VIN = 5 V; VOUT = 12 V; I_{LOAD}= 50 mA to 150 mA	Figure 8
Start-up	VIN = 5 V; VOUT = 12 V; I_{LOAD}= 250 mA	Figure 9
Skip-cycle switching	VIN = 9 V ; VOUT = 12 V, I_{LOAD}= 100 µA	Figure 10

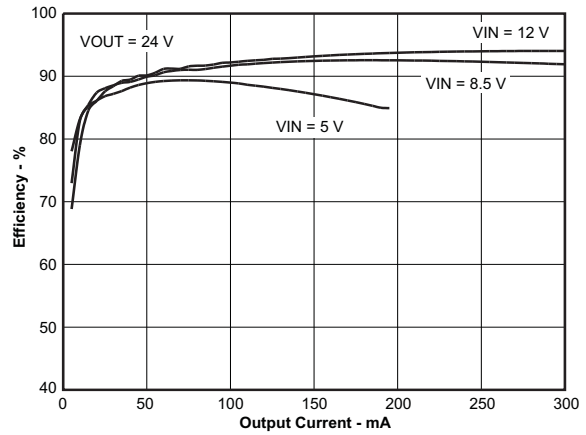

Figure 1. Efficiency vs Output Current

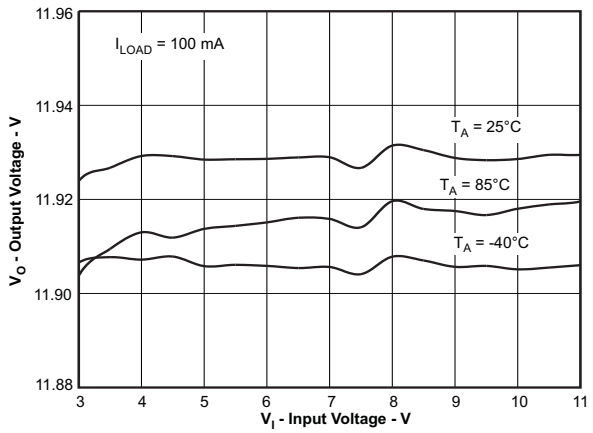

Figure 2. Output Voltage vs Input Voltage

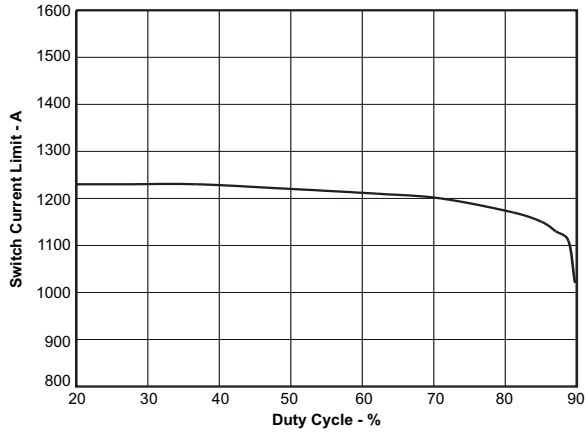

Figure 3. Switch Current Limit vs Duty Cycle

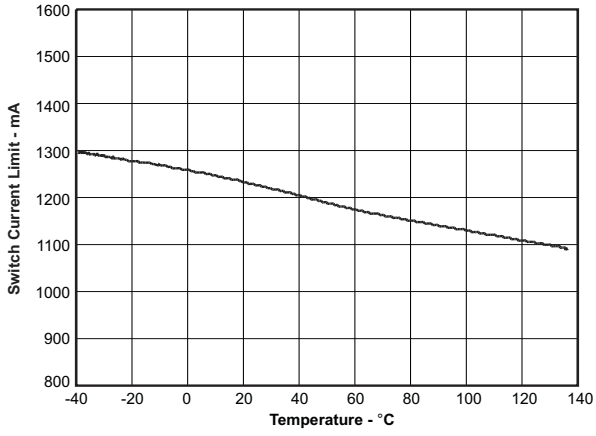

Figure 4. Switch Current Limit vs Temperature

Copyright © 2011–2020, Texas Instruments Incorporated

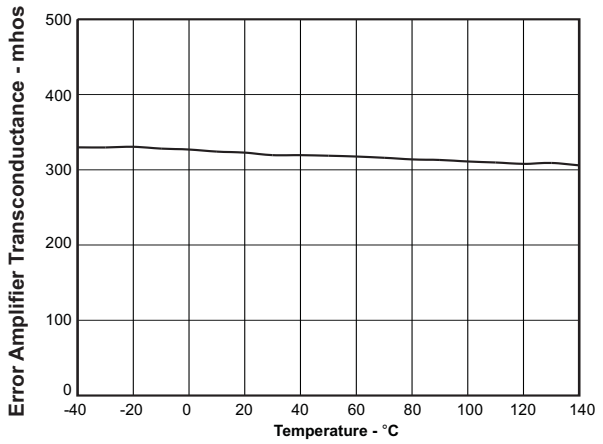

Figure 5. Error Amplifier Transconductance vs Temperature

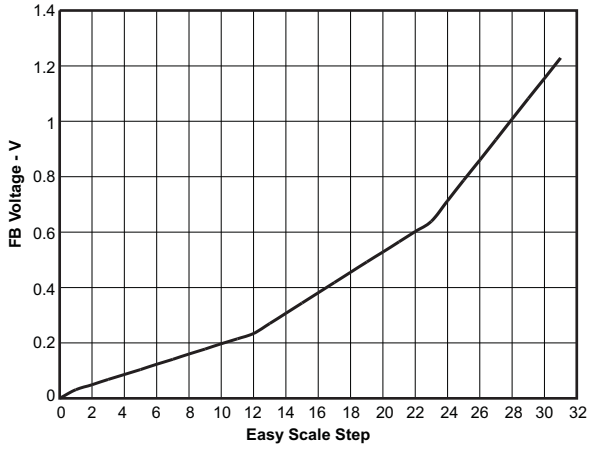

Figure 6. FB Voltage vs EasyScale Step

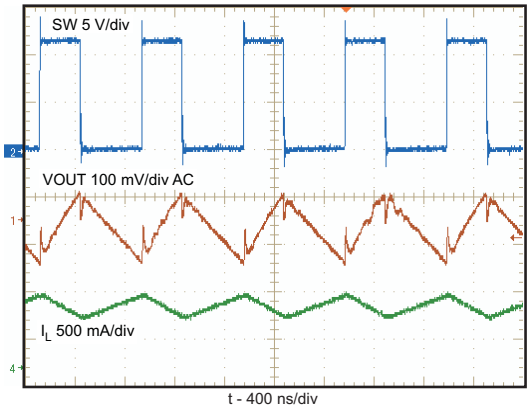

Figure 7. PWM Switching Operation

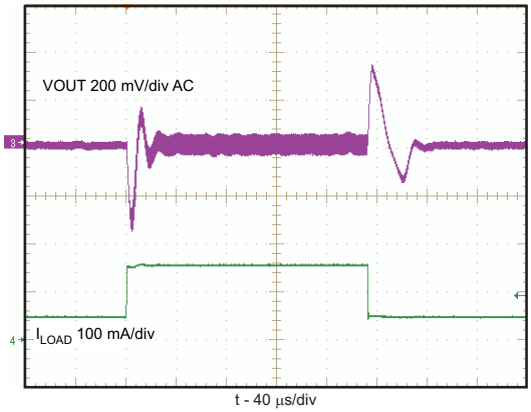

Figure 8. Load Transient Response

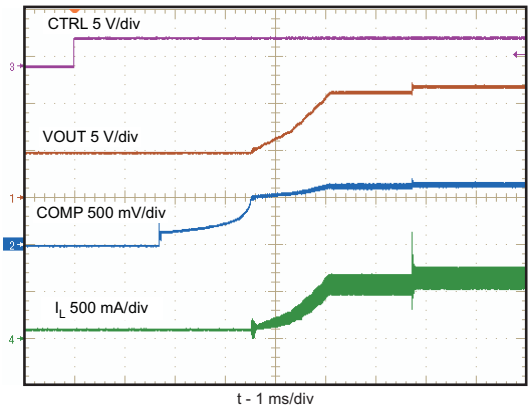

Figure 9. Start-Up

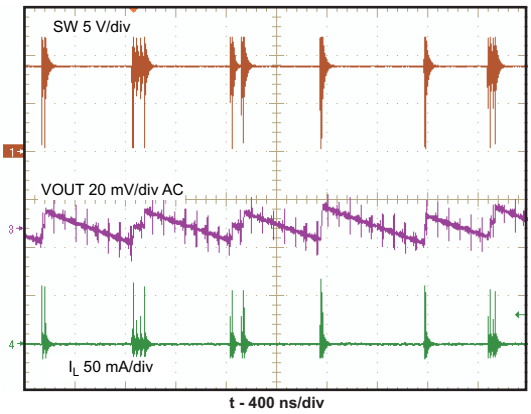

Figure 10. Skip-Cycle Switching

7 Detailed Description

7.1 Overview

The TPS61170-Q1 integrates a 40-V low-side FET for providing output voltages up to 38 V. The device regulates the output with current mode PWM (pulse width modulation) control. The switching frequency of the PWM is fixed at 1.2 MHz (typical). The PWM control circuitry turns on the switch at the beginning of each switching cycle. The input voltage is applied across the inductor and stores the energy as the inductor current ramps up. During this portion of the switching cycle, the load current is provided by the output capacitor. When the inductor current rises to the threshold set by the error amplifier output, the power switch turns off and the external Schottky diode is forward biased. The inductor transfers stored energy to replenish the output capacitor and supply the load current. This operation repeats each switching cycle. As shown in the block diagram, the duty cycle of the converter is determined by the PWM control comparator which compares the error amplifier output and the current signal.

A ramp signal from the oscillator is added to the current ramp. This slope compensation ramp is necessary to avoid subharmonic oscillations that are intrinsic to current mode control at duty cycles higher than 50%. The feedback loop regulates the FB pin to a reference voltage through an error amplifier. The output of the error amplifier must be connected to the COMP pin. An external RC compensation network must be connected to the COMP pin to optimize the feedback loop for stability and transient response.

7.2 Functional Block Diagram

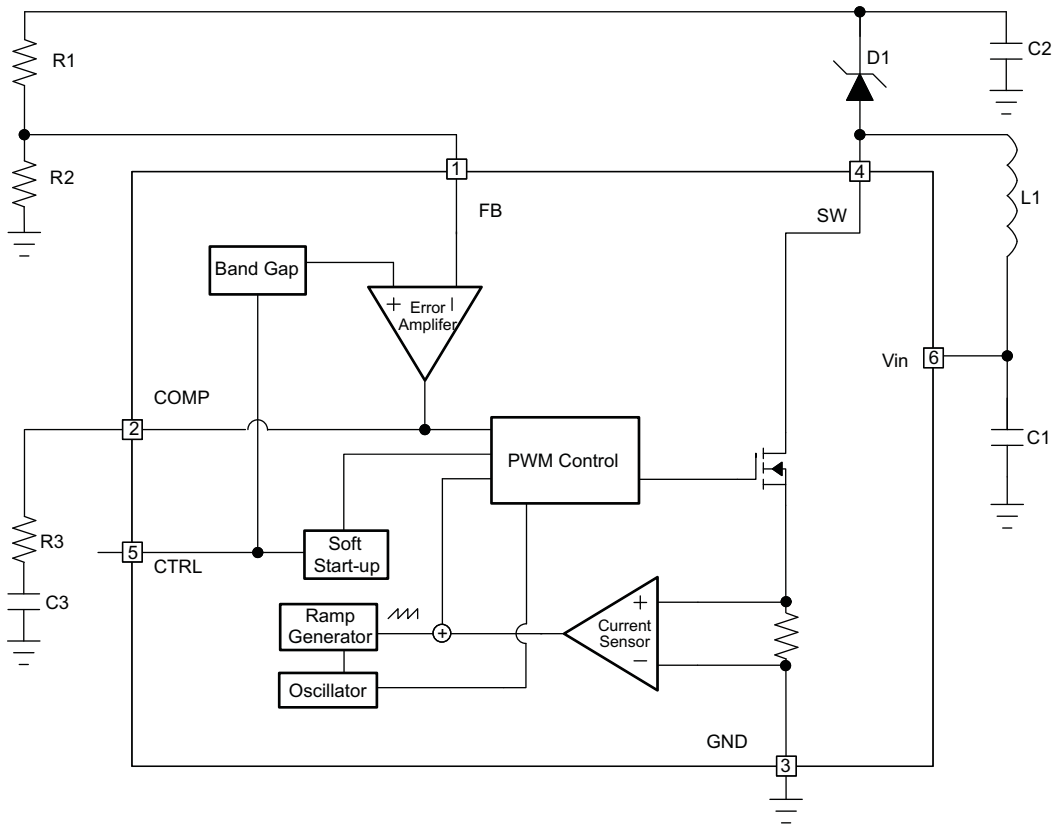

Copyright © 2011–2020, Texas Instruments Incorporated

7.3 Feature Description

7.3.1 Soft Start-up

Soft-start circuitry is integrated into the IC to avoid a high inrush current during start-up. After the device is enabled by a logic high signal on the CTRL pin, the FB pin reference voltage ramps up in 32 steps, with each step taking 213 µs. This ensures that the output voltage rises slowly to reduce inrush current. Additionally, for the first 5 ms after the COMP voltage ramps, the current limit of the PWM switch is set to half of the normal current limit specification or below 700 mA (typical). For a typical example, see the start-up waveform (Figure 9).

7.3.2 Overcurrent Protection

TPS61170-Q1 has a cycle-by-cycle overcurrent limit feature that turns off the power switch once the inductor current reaches the overcurrent limit. The PWM circuitry resets itself at the beginning of the next switch cycle. During an overcurrent event, this results in a decrease of output voltage that is directly proportional to load current. The current limit threshold as well as input voltage, output voltage, switching frequency and inductor value determine the maximum available output current. Larger inductance values typically increase the current output capability because of the reduced current ripple. See the *Application and Implementation* section for the output current calculation.

7.3.3 Undervoltage Lockout

An undervoltage lockout (UVLO) prevents misoperation of the device at input voltages below 2.2 V (typical). When the input voltage is below the undervoltage threshold, the device remains off and the internal switch FET is turned off. The undervoltage lockout threshold is set below minimum operating voltage of 3 V to avoid any transient VIN dip triggering the UVLO and causing the device to reset. For the input voltages between UVLO threshold and 3 V, the device tries operation, but the specifications are not ensured.

7.3.4 Thermal Shutdown

An internal thermal shutdown turns off the device when the typical junction temperature of 160°C is exceeded. The IC restarts when the junction temperature drops by 15°C.

7.3.5 Enable and Shutdown

The TPS61170-Q1 device enters shutdown when the CTRL voltage is less than 0.4 V for more than 2.5 ms. In shutdown, the input supply current for the device is less than 1 µA (maximum). The CTRL pin has an internal 800-kΩ (typical) pulldown resistor to disable the device when the pin is left unconnected.

7.4 Device Functional Modes

7.4.1 PWM Program Mode

When the CTRL pin is constantly high, the FB voltage is regulated to 1.229 V typically. However, the CTRL pin allows a PWM signal to lower this regulation voltage. The relationship between the duty cycle and FB voltage is given in Equation 1:

$$V_{FB} = \text{Duty} \times 1.229\ \text{V} \tag{1}$$

where

- Duty = duty cycle of the PWM signal
- 1.229 V = internal reference voltage

As shown in Figure 11, the IC chops up the internal 1.229-V reference voltage at the duty cycle of the PWM signal. The pulse signal is then filtered by an internal low-pass filter. The output of the filter is connected to the error amplifier as the reference voltage for the FB pin regulation. The regulation voltage is independent of the PWM logic voltage level which often has large variations.

Device Functional Modes (continued)

For optimum performance, use the PWM mode in the range of 5 kHz to 100 kHz. The requirement of minimum frequency comes from the EasyScale detection delay and detection time specification for the mode selection. The device can mistakenly enter 1-wire mode if the PWM signal frequency is less than 5 kHz. Because there is an internal fixed ON-time error of 40 nS, the FB voltage absolute value will be different than expected when the PWM frequency is above 100 kHz. For example, the additional duty cycle of 3.2% due to the ON-time error increases the FB voltage when using an 800-kHz PWM signal. A compromise between PWM frequency and FB voltage accuracy extends the frequency range. Adding an external RC filter to the pin serves no purpose.

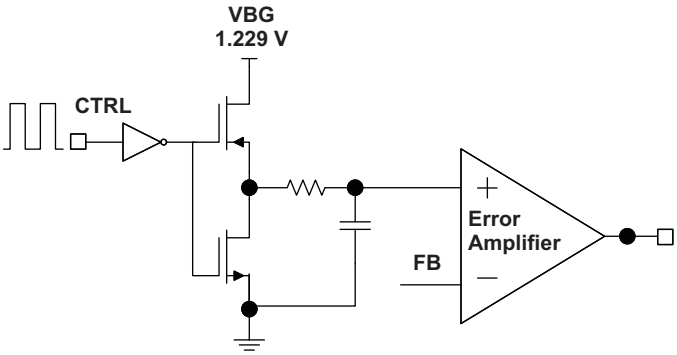

Figure 11. Block Diagram of Programmable FB Voltage Using PWM Signal

7.4.2 1-Wire Program Mode

The CTRL pin features a simple digital interface to control the feedback reference voltage. The 1-wire mode can save the processor power and battery life as it does not require a PWM signal all the time, and the processor can enter idle mode if available.

The TPS61170-Q1 adopts the EasyScale protocol, which can program the FB voltage to any of the 32 steps with one command. See Table 2 for the FB pin voltage steps. The programmed reference voltage is stored in an internal register. The default value is full scale when the device is first enabled (V_{FB} = 1.229 V). A power reset clears the register value and reset it to default.

7.4.3 EasyScale

EasyScale is a simple but very flexible 1-pin interface to configure the FB voltage. The interface is based on a master-slave structure, where the master is typically a microcontroller or application processor. Figure 12 and Table 2 give an overview of the protocol. The protocol consists of a device-specific address byte and a data byte. The device-specific address byte is fixed to 72 hex. The data byte consists of 5 bits for information, 2 address bits, and the RFA bit. The RFA bit set to high indicates the *Request for Acknowledge* condition. The Acknowledge condition is only applied if the protocol was received correctly. The advantage of EasyScale compared with other on pin interfaces is that its bit detection is in a large extent independent from the bit transmission rate. EasyScale can automatically detect bit rates from 1.7 kbsp up to 160 kbsp.

Table 2. Selectable FB Voltage

	FB VOLTAGE (mV)	D4	D3	D2	D1	D0
0	0.000	0	0	0	0	0
1	0.031	0	0	0	0	1
2	0.049	0	0	0	1	0
3	0.068	0	0	0	1	1
4	0.086	0	0	1	0	0
5	0.104	0	0	1	0	1
6	0.123	0	0	1	1	0
7	0.141	0	0	1	1	1

Copyright © 2011–2020, Texas Instruments Incorporated

Table 2. Selectable FB Voltage (continued)

	FB VOLTAGE (mV)	D4	D3	D2	D1	D0
8	0.160	0	1	0	0	0
9	0.178	0	1	0	0	1
10	0.197	0	1	0	1	0
11	0.215	0	1	0	1	1
12	0.234	0	1	1	0	0
13	0.270	0	1	1	0	1
14	0.307	0	1	1	1	0
15	0.344	0	1	1	1	1
16	0.381	1	0	0	0	0
17	0.418	1	0	0	0	1
18	0.455	1	0	0	1	0
19	0.492	1	0	0	1	1
20	0.528	1	0	1	0	0
21	0.565	1	0	1	0	1
22	0.602	1	0	1	1	0
23	0.639	1	0	1	1	1
24	0.713	1	1	0	0	0
25	0.787	1	1	0	0	1
26	0.860	1	1	0	1	0
27	0.934	1	1	0	1	1
28	1.008	1	1	1	0	0
29	1.082	1	1	1	0	1
30	1.155	1	1	1	1	0
31	1.229	1	1	1	1	1

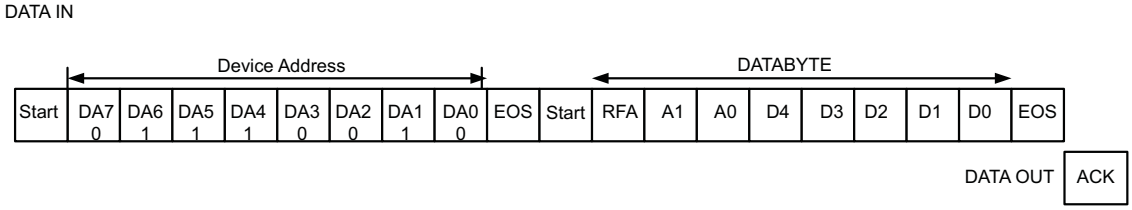

Figure 12. EasyScale Protocol Overview

Table 3. EasyScale Bit Description

BYTE	BIT NUMBER	NAME	TRANSMISSION DIRECTION	DESCRIPTION
Device Address Byte 72 hex	7	DA7	IN	0 MSB device address
	6	DA6		1
	5	DA5		1
	4	DA4		1
	3	DA3		0
	2	DA2		0
	1	DA1		1
	0	DA0		0 LSB device address

Table 3. EasyScale Bit Description (continued)

BYTE	BIT NUMBER	NAME	TRANSMISSION DIRECTION	DESCRIPTION
Data byte	7 (MSB)	RFA	IN	Request for acknowledge. If high, acknowledge is applied by device
	6	A1		0 Address bit 1
	5	A0		0 Address bit 0
	4	D4		Data bit 4
	3	D3		Data bit 3
	2	D2		Data bit 2
	1	D1		Data bit 1
	0 (LSB)	D0		Data bit 0
		ACK	OUT	Acknowledge condition active 0, this condition will only be applied if the RFA bit is set. Open-drain output, Line must be pulled high by the host with a pullup resistor. This feature can only be used if the master has an open-drain output stage. In case of a push-pull output stage Acknowledge condition may not be requested!

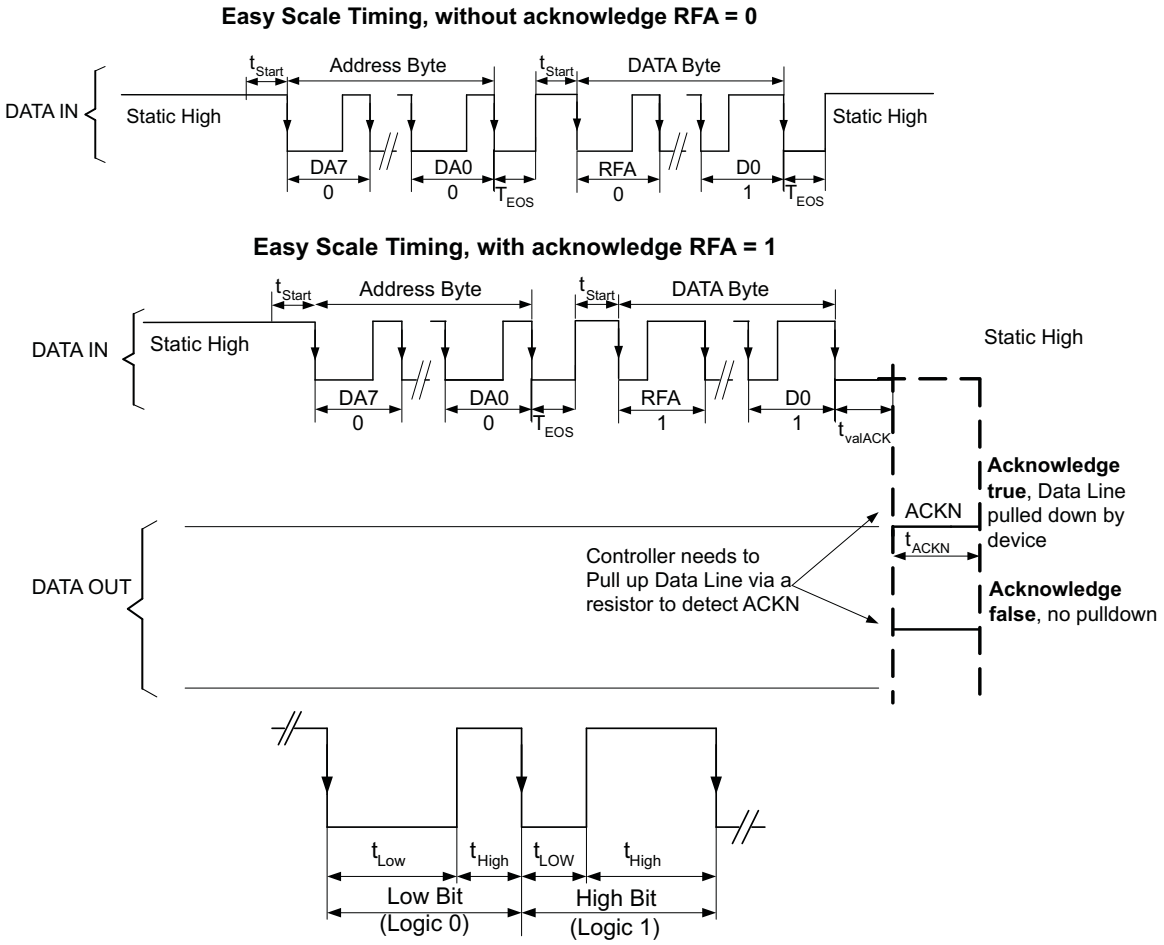

Figure 13. EasyScale — Bit Coding

All bits are transmitted MSB first and LSB last. Figure 13 shows the protocol without acknowledge request (bit RFA = 0), Figure 13 with acknowledge (bit RFA = 1) request. Before both bytes, device address byte and data byte, a start condition must be applied. For this, the CTRL pin must be pulled high for at least t_{start} (2 µs) before the bit transmission starts with the falling edge. If the CTRL pin is already at high level, no start condition is needed before the device address byte. The transmission of each byte is closed with an End of Stream condition for at least t_{EOS} (2 µs).

Copyright © 2011–2020, Texas Instruments Incorporated

The bit detection is based on a Logic Detection scheme, where the criterion is the relation between t_{LOW} and t_{HIGH}. It can be simplified to:

High bit: $t_{HIGH} > t_{LOW}$, but with t_{HIGH} at least 2x t_{LOW}, see Figure 13.

Low bit: $t_{HIGH} < t_{LOW}$, but with t_{LOW} at least 2x t_{HIGH}, see Figure 13.

The bit detection starts with a falling edge on the CTRL pin and ends with the next falling edge. Depending on the relation between t_{HIGH} and t_{LOW}, the logic 0 or 1 is detected.

The acknowledge condition is only applied if:

- Acknowledge is requested by a set RFA bit.
- The transmitted device address matches with the device address of the device.
- 16 bits are received correctly.

If the device turns on the internal ACKN-MOSFET and pulls the CTRL pin low for the time t_{ACKN}, which is 512 µs maximum then the Acknowledge condition is valid after an internal delay time t_{valACK}. This means that the internal ACKN-MOSFET is turned on after t_{valACK}, when the last falling edge of the protocol was detected. The master controller keeps the line low in this period. The master device can detect the acknowledge condition with its input by releasing the CTRL pin after t_{valACK} and read back a logic 0. The CTRL pin can be used again after the acknowledge condition ends.

The Acknowledge condition may only be requested if the master device has an open-drain output. For the push-pull output stage, the use a series resistor in the CRTL line to limit the current to 500 µA is recommended for such cases as:

- An accidentally requested acknowledge
- To protect the internal ACKN-MOSFET

7.5 Programming

7.5.1 Feedback Reference Program Mode Selection

The CTRL pin is used for changing the FB pin reference voltage *on-the-fly*. There are two methods to program the reference voltage, PWM signal and 1-wire interface (EasyScale). The programming mode is selected each time the device is enabled. The default mode is to use the duty cycle of the PWM signal on the CTRL pin to modulate the reference voltage. To enter the 1-wire interface mode, the following digital pattern on the CTRL pin must be recognized by the IC every time the IC starts from the shutdown mode.

1. Pull CTRL pin high to enable the TPS61170-Q1 and to start the 1-wire mode detection window.
2. After the EasyScale detection delay (t_{es_delay}, 100 µsec) expires, drive CTRL low for more than the EasyScale detection time (t_{es_detect}, 260 µsec).
3. The CTRL pin must be low for more than EasyScale detection time before the EasyScale detection window (t_{es_win}, 1ms) expires. EasyScale detection window starts from the first CTRL pin low to high transition.

The IC immediately enters the 1-wire mode once the preceding three conditions are met. The EasyScale communication can start before the detection window expires. Once the mode is programmed, it cannot be changed without another start-up. In other words, the IC must be shut down by pulling the CTRL low for 2.5 ms and restarted to exit EasyScale Mode. See Figure 14 for a graphical explanation.

Programming (continued)

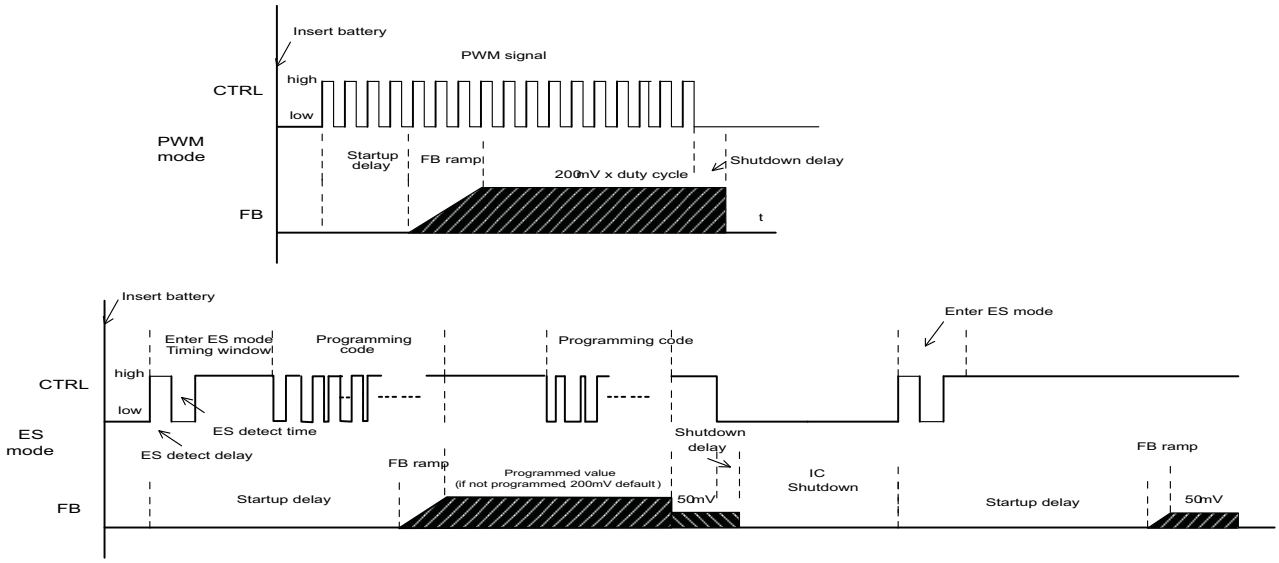

Figure 14. Mode Detection of Feedback Reference Program

Copyright © 2011–2020, Texas Instruments Incorporated

8 Application and Implementation

NOTE

Information in the following applications sections is not part of the TI component specification, and TI does not warrant its accuracy or completeness. TI's customers are responsible for determining suitability of components for their purposes. Customers should validate and test their design implementation to confirm system functionality.

8.1 Application Information

The TPS61170-Q1 device can be configured in several topologies including boost and SEPIC. The device has a wide-input voltage range to support applications with input voltage from multicell batteries or regulated 5-V, 12-V power rails.

8.2 Typical Applications

8.2.1 12-V to 24-V DC-DC Power Conversion

This application is designed for a 5-V to 12-V power conversion with programmable feedback reference voltage.

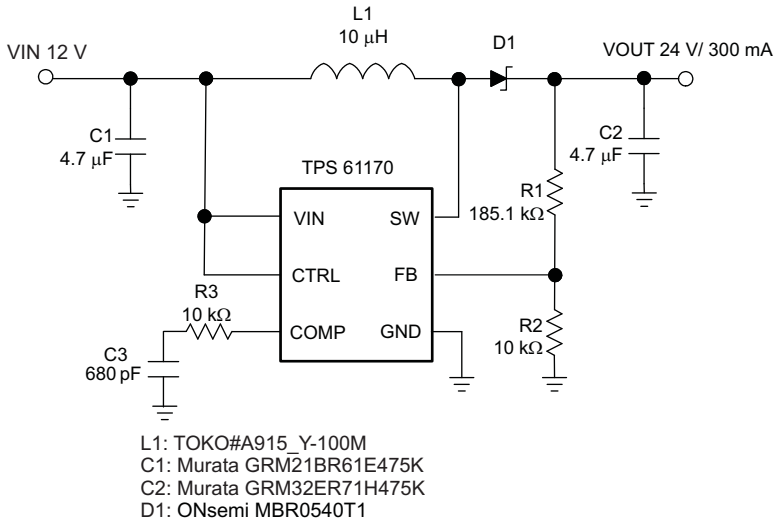

Figure 15. 12-V to 24-V DC-DC Power Conversion

8.2.1.1 Design Requirements

Use the following parameters for this design example:

- Input Voltage: 12 V
- Output Voltage: 300 mA

Typical Applications (continued)

8.2.1.2 Detailed Design Procedure

8.2.1.2.1 Program Output Voltage

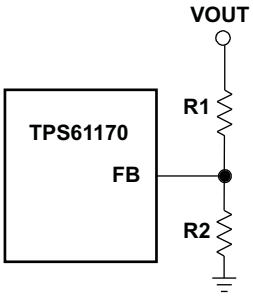

Figure 16. Program Output Voltage

To program the output voltage, select the values of R1 and R2 (see Figure 16) according to Equation 2.

$$Vout = 1.229\ V \times \left(\frac{R1}{R2} + 1\right) \qquad R1 = R2 \times \left(\frac{Vout}{1.229\ V} - 1\right) \tag{2}$$

Considering the leakage current through the resistor divider and noise decoupling to FB pin, an optimum value for R2 is approximately 10 k. The output voltage tolerance depends on the accuracy of the reference voltage and the tolerance of R1 and R2.

8.2.1.2.2 Maximum Output Current

The overcurrent limit in a boost converter limits the maximum input current, and thus the maximum input power for a given input voltage. The maximum output power is less than the maximum input power due to power conversion losses. Therefore, the current-limit setting, input voltage, output voltage and efficiency can all affect the maximum output current. The current limit clamps the peak inductor current; therefore, the ripple must be subtracted to derive the maximum DC current. The ripple current is a function of the switching frequency, inductor value and duty cycle. The following equations take into account of all of the previously factors for maximum output current calculation.

$$I_P = \frac{1}{\left[L \times F_s \times \left(\frac{1}{V_{out} + V_f - V_{in}} + \frac{1}{V_{in}}\right)\right]}$$

where

- I_P = inductor peak-to-peak ripple current
- L = inductor value
- V_f = Schottky diode forward voltage
- F_s = switching frequency
- V_{out} = output voltage (3)

$$I_{out_max} = \frac{V_{in} \times (I_{lim} - I_P/2) \times \eta}{V_{out}}$$

where

- I_{out_max} = maximum output current of the boost converter
- I_{lim} = overcurrent limit
- η = efficiency (4)

For instance, when V_{in} is 5 V, V_{out} is 12 V, the inductor is 10 µH, the Schottky forward voltage is 0.2 V; and then the maximum output current is 300 mA in a typical operation.

Copyright © 2011–2020, Texas Instruments Incorporated

Typical Applications (continued)

8.2.1.2.3 Switch Duty Cycle

The maximum switch duty cycle (D) of the TPS61170-Q1 is 90% (minimum). The duty cycle of a boost converter under continuous conduction mode (CCM) is given by:

$$D = \frac{Vout - Vin}{Vout} \tag{5}$$

For a 5-V to 12-V application, the duty cycle is 58.3%, and for a 5-V to 24-V application, the duty cycle is 79.2%. The duty cycle must be lower than the maximum specification of 90% in the application; otherwise, the output voltage cannot be regulated.

Once the PWM switch is turned on, the TPS61170-Q1 device has minimum ON pulse width. This sets the limit of the minimum duty cycle. When operating at low duty cycles, the TPS61170-Q1 enters pulse-skipping mode. In this mode, the device turns the power switch off for several switching cycles to prevent the output voltage from rising above regulation. This operation typically occurs in light load condition when the PWM operates in discontinuous mode. See the Figure 10.

8.2.1.2.4 Inductor Selection

The selection of the inductor affects steady state operation as well as transient behavior and loop stability. These factors make it the most important component in power regulator design. There are three important inductor specifications: inductor value, DC resistance (DCR) and saturation current. Considering inductor value alone is not enough.

The inductance value of the inductor determines its ripple current. TI recommends setting the peak-to-peak ripple current given by Equation 3 to 30% to 40% of the DC current. Inductance values shown in the *Recommended Operating Conditions* table are recommended for most applications. Inductor DC current can be calculated as

$$I_{in_DC} = \frac{Vout \times Iout}{Vin \times \eta} \tag{6}$$

Inductor values can have ±20% tolerance with no current bias. When the inductor current approaches saturation level, its inductance can decrease 20% to 35% from the 0-A value depending on how the inductor vendor defines saturation current. Using an inductor with a smaller inductance value forces discontinuous PWM where the inductor current ramps down to zero before the end of each switching cycle. This reduces the maximum output current of the boost converter, causes large input voltage ripple and reduces efficiency. In general, inductors with large inductance and low DCR values provide much more output current and higher conversion efficiency. Inductors with smaller inductance values can give better load transient response. For these reasons, a 10-µH to 22-µH inductance value range is recommended. Table 4 lists some recommended inductors for the TPS61170-Q1.

TPS61170-Q1 device has built-in slope compensation to avoid subharmonic oscillation associated with current mode control. If the inductor value is lower than 10 µH, the slope compensation may not be adequate, and the loop can become unstable. Therefore, customers must verify operation in their application if the inductor is different from the recommended values.

Table 4. Recommended Inductors for TPS61170-Q1

PART NUMBER	L (µH)	DCR MAX (mΩ)	SATURATION CURRENT (A)	SIZE (L × W × H mm)	VENDOR(1)
A915_Y-100M	10	90	1.3	5.2 × 5.2 × 3	TOKO
VLCF5020T-100M1R1-1	10	237	1.1	5 × 5 × 2	TDK
CDRH4D22/HP	10	144	1.2	5 × 5 × 2.4	Sumida
LQH43PN100MR0	10	247	0.84	4.5 × 3.2 × 2	Murata

(1) See Third-party Products disclaimer

8.2.1.2.5 Schottky Diode Selection

The high switching frequency of the TPS61170-Q1 device demands a high-speed rectifying switch for optimum efficiency. Ensure that the average and peak current rating of the diode exceeds the average output current and peak inductor current. In addition, the reverse breakdown voltage of the diode must exceed the switch FET rating voltage of 40 V. So, the ONSemi MBR0540 is recommended for the TPS61170-Q1 device. However, Schottky diodes with lower rated voltages can be used for lower output voltages to save the solution size and cost. For example, a converter providing a 12-V output with 20-V diode is a good choice.

8.2.1.2.6 Compensation Capacitor Selection

The TPS61170-Q1 has an external compensation, COMP pin, which allows the loop response to be optimized for each application. The COMP pin is the output of the internal error amplifier. An external resistor R3 and ceramic capacitor C3 are connected to COMP pin to provide a pole and a zero. This pole and zero, along with the inherent pole of a current mode control boost converter, determine the close loop frequency response. This is important to a converter stability and transient response.

The following equations summarize the poles, zeros and DC gain of a TPS61170-Q1 boost converter with ceramic output capacitor (C2), as shown in the block diagram. They include the dominant pole (f_{P1}), the output pole (f_{P2}) of a boost converter, the right-half-plane zero (f_{RHPZ}) of a boost converter, the zero (f_Z) generated by R3 and C3, and the DC gain (A).

$$f_{P1} = \frac{1}{2\pi \text{ x } 6\ \text{M}\Omega \text{ x C3}} \tag{7}$$

$$f_{P2} = \frac{2}{2\pi \text{ x Rout x C2}} \tag{8}$$

$$f_{RHPZ} = \frac{\text{Rout}}{2\pi \text{ x L}} \text{ x } \left(\frac{\text{Vin}}{\text{Vout}}\right)^2 \tag{9}$$

$$f_Z = \frac{1}{2\pi \text{ x R3 x C3}} \tag{10}$$

$$A = \frac{1.229}{\text{Vout}} \text{ x Gea x } 6\ \text{M}\Omega \text{ x } \frac{\text{Vin}}{\text{Vout x Rsense}} \text{ x Rout x } \frac{1}{2}$$

where

- Rout is the load resistance
- Gea is the error amplifier transconductance located in *Electrical Characteristics*
- Rsense (100 mΩ typical) is a sense resistor in the current control loop (11)

These equations help generate a simple bode plot for TPS61170-Q1 loop analysis.

Increasing R3 or reducing C3 increases the close loop bandwidth which improves the transient response. Adjusting R3 and C3 in opposite directions increase the phase, and help loop stability. For many of the applications, the recommended value of 10 kΩ and 680 pF makes an ideal compromise between transient response and loop stability. To optimize the compensation, use C3 in the range of 100 pF to 10 nF, and R3 of 10 kΩ. See the TI application report, SLVA319, for thorough analysis and description of the boost converter small signal model and compensation design.

8.2.1.2.7 Input and Output Capacitor Selection

The output capacitor is mainly selected to meet the requirements for the output ripple and loop stability. The ripple voltage is related to the capacitance of the capacitor and its equivalent series resistance (ESR). Assuming a capacitor with zero ESR, the minimum capacitance needed for a given ripple can be calculated using Equation 12.

$$C_{out} = \frac{\left(V_{out} - V_{in}\right) I_{out}}{V_{out} \times Fs \times V_{ripple}}$$

where

- V_{ripple} = peak-to-peak output ripple. (12)

The additional output ripple component caused by ESR is calculated using:

Copyright © 2011–2020, Texas Instruments Incorporated

$$V_{ripple_ESR} = I_{out} \times R_{ESR} \tag{13}$$

Due to its low ESR, Vripple_ESR can be neglected for ceramic capacitors, but must be considered if tantalum or electrolytic capacitors are used.

Care must be taken when evaluating the derating value of a ceramic capacitor under DC bias, aging and AC signal. For example, larger form factor capacitors (in 1206 size) have a resonant frequencies in the range of the switching frequency. So, the effective capacitance is significantly lower. The DC bias can also significantly reduce capacitance. A ceramic capacitor can lose as much as 50% of its capacitance at its rated voltage. Therefore, choose a ceramic capacitor with a voltage rating at least 1.5× the expected DC bias voltage.

The capacitor in the range of 1 µF to 4.7 µF is recommended for input side. The output typically requires a capacitor in the range of 1 µF to 10 µF. The output capacitor affects the loop stability of the boost regulator. If the output capacitor is below the range, the boost regulator can potentially become unstable.

8.2.1.3 Application Curve

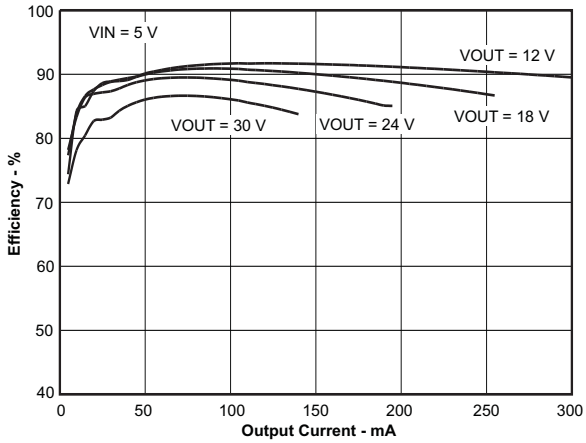

Figure 17. Efficiency vs Output Current

8.2.2 5-V to 12-V DC-DC Power Conversion With Programmable Feedback Reference Voltage

Using Equation 3, we calculate the output resistors to program the desired output voltage of 24 V. The inductance, compensation capacitor, input capacitor, and the output capacitor are calculated in the same way as for the first application example.

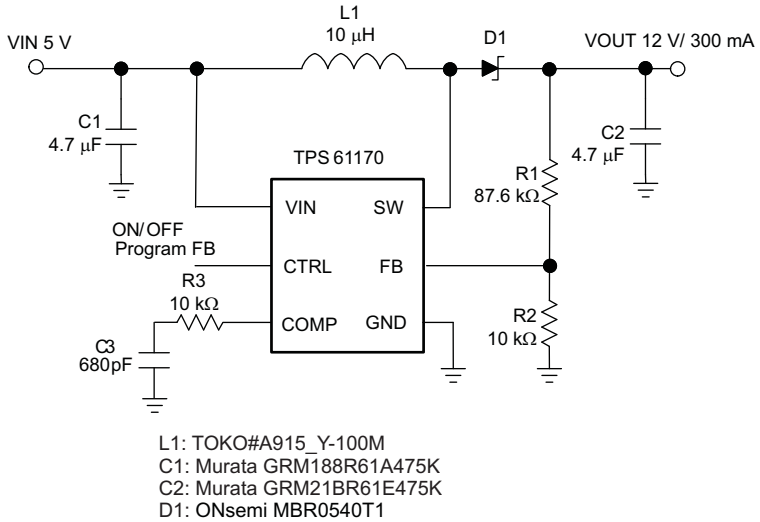

Figure 18. 5-V to 12-V DC-DC Power Conversion With Programmable Feedback Reference Voltage

8.2.3 12-V SEPIC (Buck-Boost) Converter

The single-ended primary-inductance converter (SEPIC) is a DC-DC converter topology that provides a positive regulated output voltage from an input voltage that varies from above to below the output voltage. In this example, we demonstrate a DC-DC converter that can provide 12 V at 300 mA with 90% efficiency from an input voltage from 9 to 15 V. This converter can be implemented using the TPS61170-Q1 device. See *Designing DC/DC converters based on SEPIC topology*, SLYT309 for detailed description and application curves.

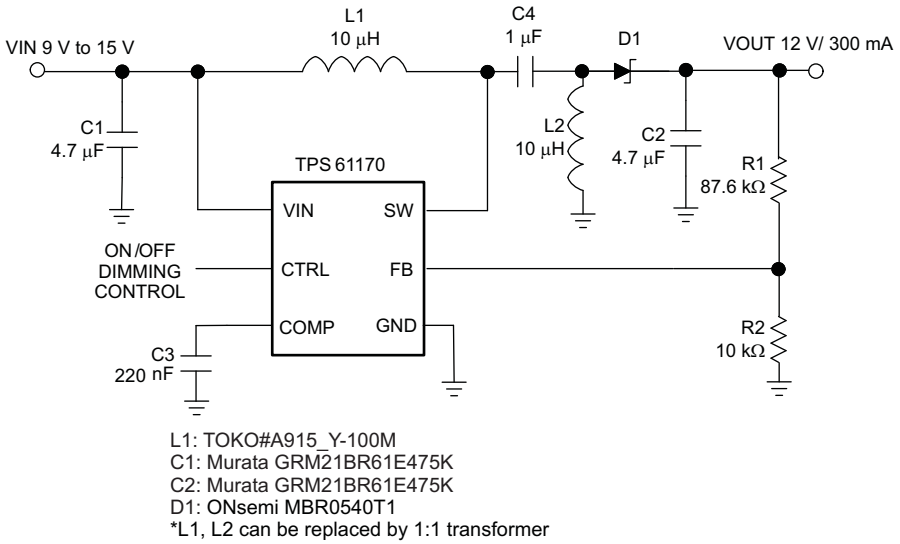

Figure 19. 12-V SEPIC (Buck-Boost) Converter

9 Power Supply Recommendations

The TPS61170-Q1 device is designed to operate from an input voltage up to 18 V. Ensure that the input supply is well regulated. Furthermore, if the supply voltage in the application is likely to reach negative voltage (for example, reverse battery) a forward diode must be placed at the input of the supply. For the VIN pin, a small ceramic capacitor with a typical value of 4.7 µF is recommended. Capacitance derating for aging, temperature, and DC bias must be considered while determining the capacitor value.

Copyright © 2011–2020, Texas Instruments Incorporated

10 Layout

10.1 Layout Guidelines

As for all switching power supplies, especially those switching at high frequencies and/or providing high currents, layout is an important design step. If layout is not carefully done, the regulator could suffer from instability as well as noise problems. To maximize efficiency, switch rise and fall times should be as short as possible. To reduce radiation of high-frequency switching noise and harmonics, proper layout of the high-frequency switching path is essential. Minimize the length and area of all traces connected to the SW pin and always use a ground plane under the switching regulator to minimize interplane coupling. The high current path including the switch, Schottky diode, and output capacitor, contains nanosecond rise and fall times and should be kept as short as possible. The input capacitor needs not only to be close to the VIN pin, but also to the GND pin to reduce the IC supply ripple. Figure 20 shows a sample layout.

10.2 Layout Example

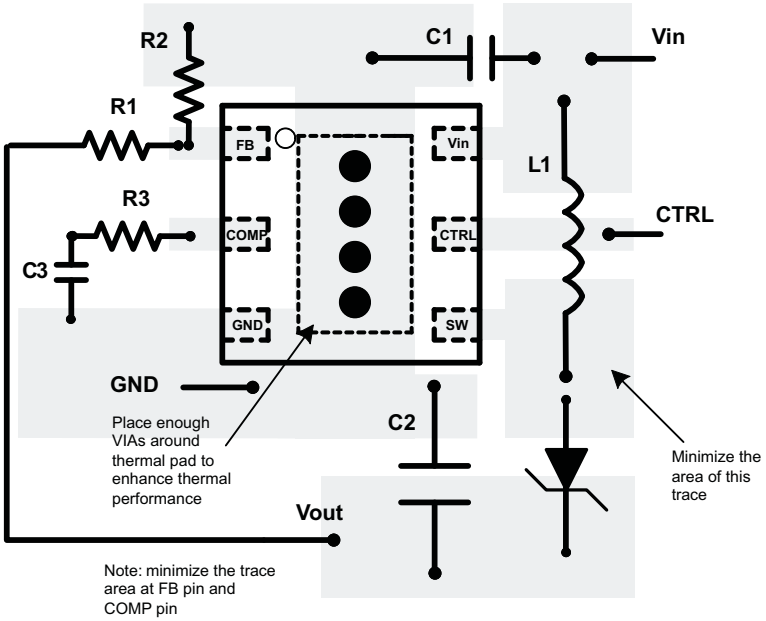

Figure 20. PCB Layout Recommendation

10.3 Thermal Considerations

The maximum IC junction temperature should be restricted to 125°C under normal operating conditions. This restriction limits the power dissipation of the TPS61170-Q1. Calculate the maximum allowable dissipation, $P_{D(max)}$, and keep the actual dissipation less than or equal to $P_{D(max)}$. The maximum-power-dissipation limit is determined using Equation 14:

$$P_{D(max)} = \frac{125^{\circ}C - T_A}{R_{\theta JA}}$$

where

- T_A is the maximum ambient temperature for the application.
- $R_{\theta JA}$ is the thermal resistance junction-to-ambient given in the *Thermal Information* table. (14)

The TPS61170-Q1 comes in a thermally enhanced SON package. This package includes a thermal pad that improves the thermal capabilities of the package. The $R_{\theta JA}$ of the SON package greatly depends on the PCB layout and thermal pad connection. The thermal pad must be soldered to the analog ground on the PCB. Using thermal vias underneath the thermal pad as illustrated in the layout example. Also see the *QFN/SON PCB Attachment* application report (SLUA271).

11 Device and Documentation Support

11.1 Device Support

11.1.1 Third-Party Products Disclaimer

TI'S PUBLICATION OF INFORMATION REGARDING THIRD-PARTY PRODUCTS OR SERVICES DOES NOT CONSTITUTE AN ENDORSEMENT REGARDING THE SUITABILITY OF SUCH PRODUCTS OR SERVICES OR A WARRANTY, REPRESENTATION OR ENDORSEMENT OF SUCH PRODUCTS OR SERVICES, EITHER ALONE OR IN COMBINATION WITH ANY TI PRODUCT OR SERVICE.

11.2 Documentation Support

11.2.1 Related Documentation

For related documentation see the following:

- *Designing DC/DC converters based on SEPIC topology*, SLYT309
- *How to Design a Boost Converter With the TPS61170*, SLVA319
- *QFN/SON PCB Attachment*, SLUA271

11.3 Support Resources

TI E2E™ support forums are an engineer's go-to source for fast, verified answers and design help — straight from the experts. Search existing answers or ask your own question to get the quick design help you need.

Linked content is provided "AS IS" by the respective contributors. They do not constitute TI specifications and do not necessarily reflect TI's views; see TI's Terms of Use.

11.4 Trademarks

EasyScale, E2E are trademarks of Texas Instruments.
All other trademarks are the property of their respective owners.

11.5 Electrostatic Discharge Caution

These devices have limited built-in ESD protection. The leads should be shorted together or the device placed in conductive foam during storage or handling to prevent electrostatic damage to the MOS gates.

11.6 Glossary

SLYZ022 — *TI Glossary*.

This glossary lists and explains terms, acronyms, and definitions.

12 Mechanical, Packaging, and Orderable Information

The following pages include mechanical, packaging, and orderable information. This information is the most current data available for the designated devices. This data is subject to change without notice and revision of this document. For browser-based versions of this data sheet, refer to the left-hand navigation.

Copyright © 2011–2020, Texas Instruments Incorporated

PACKAGING INFORMATION

Orderable part number	Status (1)	Material type (2)	Package | Pins	Package qty | Carrier	RoHS (3)	Lead finish/ Ball material (4)	MSL rating/ Peak reflow (5)	Op temp (°C)	Part marking (6)
TPS61170QDRVRQ1	Active	Production	WSON (DRV) | 6	3000 | LARGE T&R	Yes	NIPDAU	Level-2-260C-1 YEAR	-40 to 125	RAP
TPS61170QDRVRQ1.B	Active	Production	WSON (DRV) | 6	3000 | LARGE T&R	Yes	NIPDAU	Level-2-260C-1 YEAR	-40 to 125	RAP

(1) **Status:** For more details on status, see our product life cycle.

(2) **Material type:** When designated, preproduction parts are prototypes/experimental devices, and are not yet approved or released for full production. Testing and final process, including without limitation quality assurance, reliability performance testing, and/or process qualification, may not yet be complete, and this item is subject to further changes or possible discontinuation. If available for ordering, purchases will be subject to an additional waiver at checkout, and are intended for early internal evaluation purposes only. These items are sold without warranties of any kind.

(3) **RoHS values:** Yes, No, RoHS Exempt. See the TI RoHS Statement for additional information and value definition.

(4) **Lead finish/Ball material:** Parts may have multiple material finish options. Finish options are separated by a vertical ruled line. Lead finish/Ball material values may wrap to two lines if the finish value exceeds the maximum column width.

(5) **MSL rating/Peak reflow:** The moisture sensitivity level ratings and peak solder (reflow) temperatures. In the event that a part has multiple moisture sensitivity ratings, only the lowest level per JEDEC standards is shown. Refer to the shipping label for the actual reflow temperature that will be used to mount the part to the printed circuit board.

(6) **Part marking:** There may be an additional marking, which relates to the logo, the lot trace code information, or the environmental category of the part.

Multiple part markings will be inside parentheses. Only one part marking contained in parentheses and separated by a "~" will appear on a part. If a line is indented then it is a continuation of the previous line and the two combined represent the entire part marking for that device.

Important Information and Disclaimer: The information provided on this page represents TI's knowledge and belief as of the date that it is provided. TI bases its knowledge and belief on information provided by third parties, and makes no representation or warranty as to the accuracy of such information. Efforts are underway to better integrate information from third parties. TI has taken and continues to take reasonable steps to provide representative and accurate information but may not have conducted destructive testing or chemical analysis on incoming materials and chemicals. TI and TI suppliers consider certain information to be proprietary, and thus CAS numbers and other limited information may not be available for release.

In no event shall TI's liability arising out of such information exceed the total purchase price of the TI part(s) at issue in this document sold by TI to Customer on an annual basis.

OTHER QUALIFIED VERSIONS OF TPS61170-Q1 :

- Catalog : TPS61170

NOTE: Qualified Version Definitions:

- Catalog - TI's standard catalog product

TAPE AND REEL INFORMATION

REEL DIMENSIONS

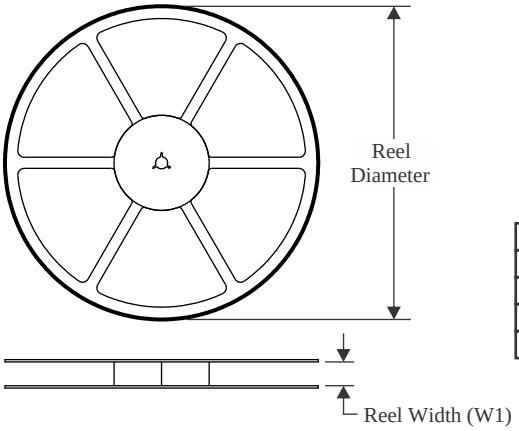

TAPE DIMENSIONS

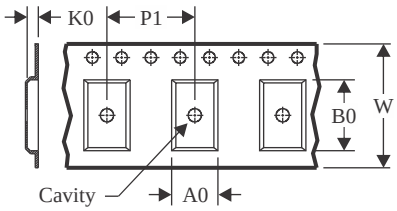

A0	Dimension designed to accommodate the component width
B0	Dimension designed to accommodate the component length
K0	Dimension designed to accommodate the component thickness
W	Overall width of the carrier tape
P1	Pitch between successive cavity centers

QUADRANT ASSIGNMENTS FOR PIN 1 ORIENTATION IN TAPE

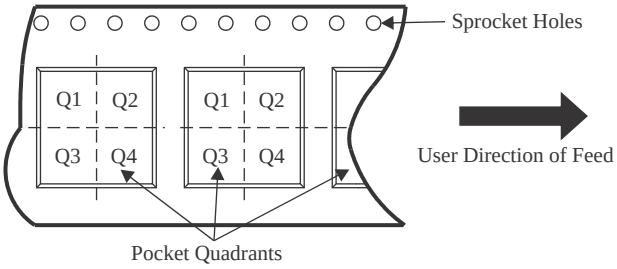

*All dimensions are nominal

Device	Package Type	Package Drawing	Pins	SPQ	Reel Diameter (mm)	Reel Width W1 (mm)	A0 (mm)	B0 (mm)	K0 (mm)	P1 (mm)	W (mm)	Pin1 Quadrant
TPS61170QDRVRQ1	WSON	DRV	6	3000	180.0	8.4	2.3	2.3	1.15	4.0	8.0	Q2

TAPE AND REEL BOX DIMENSIONS

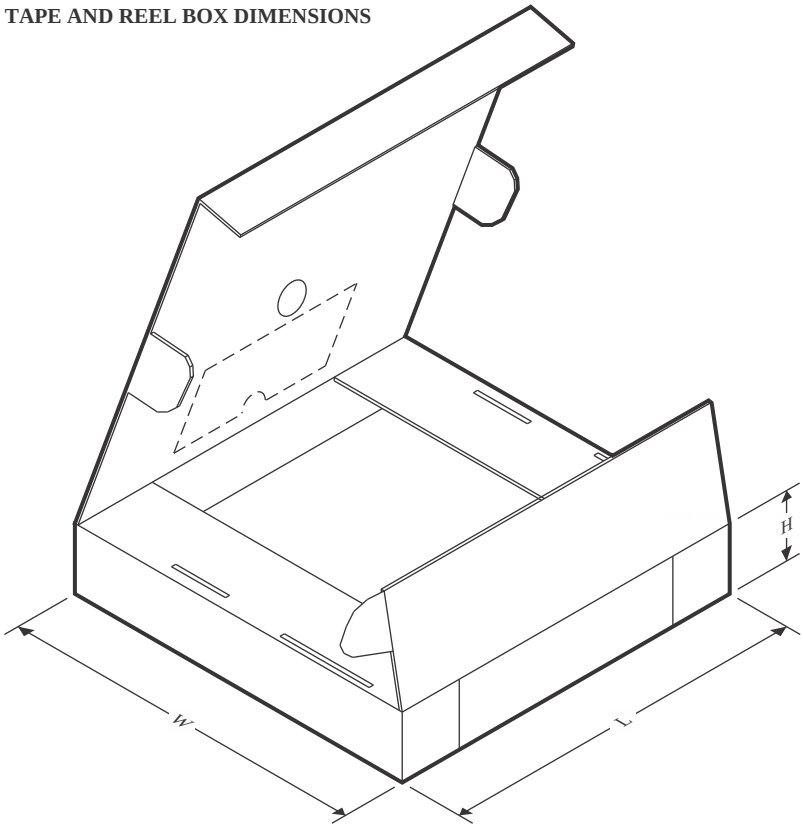

*All dimensions are nominal

Device	Package Type	Package Drawing	Pins	SPQ	Length (mm)	Width (mm)	Height (mm)
TPS61170QDRVRQ1	WSON	DRV	6	3000	210.0	185.0	35.0

DRV 6 WSON - 0.8 mm max height

PLASTIC SMALL OUTLINE - NO LEAD

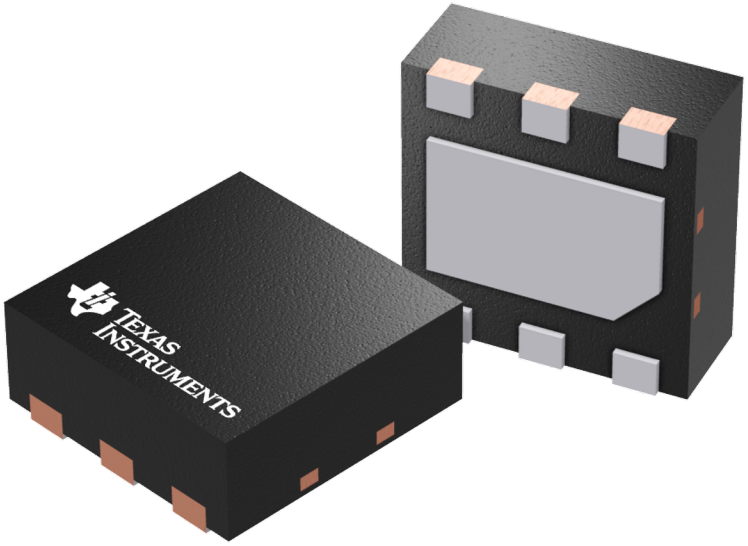

Images above are just a representation of the package family, actual package may vary.
Refer to the product data sheet for package details.

TEXAS INSTRUMENTS

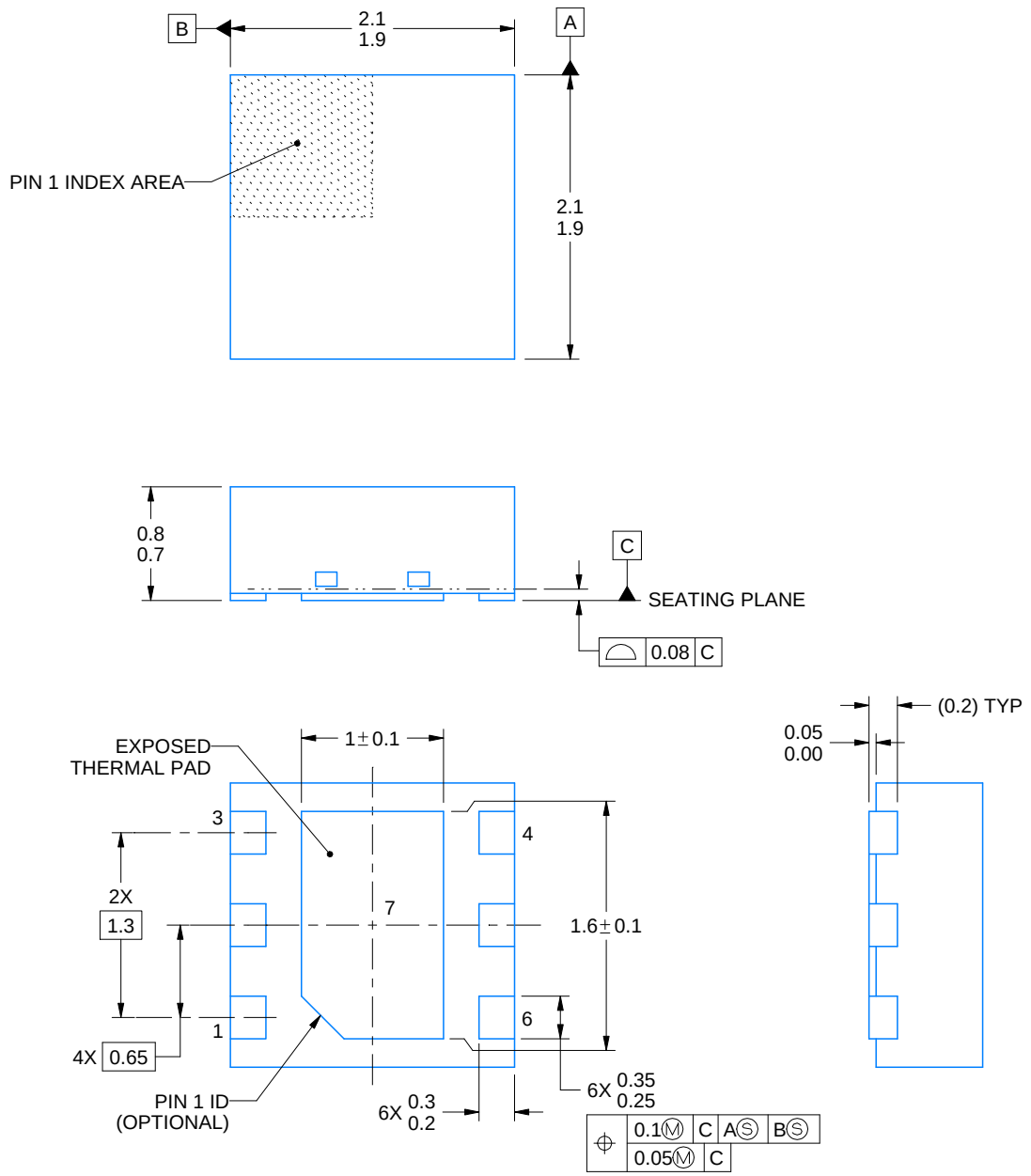

NOTES:

1. All linear dimensions are in millimeters. Any dimensions in parenthesis are for reference only. Dimensioning and tolerancing per ASME Y14.5M.
2. This drawing is subject to change without notice.
3. The package thermal pad must be soldered to the printed circuit board for thermal and mechanical performance.

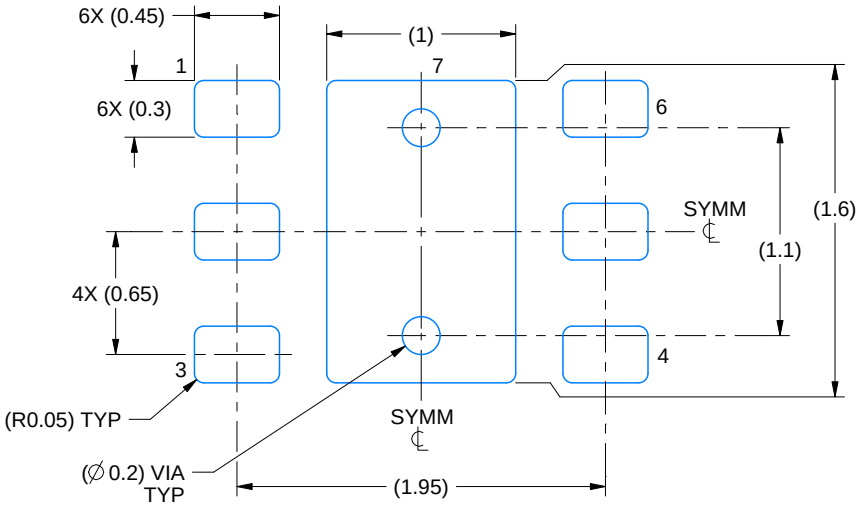

LAND PATTERN EXAMPLE
SCALE:25X

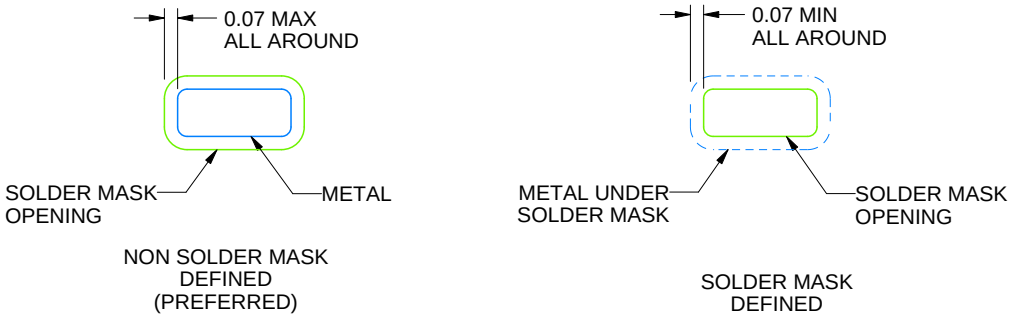

SOLDER MASK DETAILS

4222173/B 04/2018

NOTES: (continued)

4. This package is designed to be soldered to a thermal pad on the board. For more information, see Texas Instruments literature number SLUA271 (www.ti.com/lit/slua271).
5. Vias are optional depending on application, refer to device data sheet. If some or all are implemented, recommended via locations are shown.

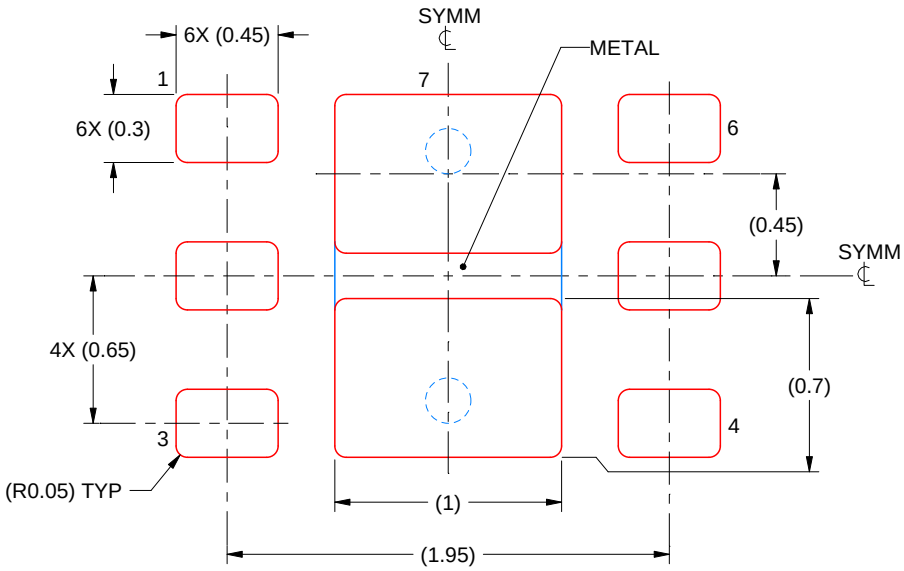

SOLDER PASTE EXAMPLE
BASED ON 0.125 mm THICK STENCIL

EXPOSED PAD #7
88% PRINTED SOLDER COVERAGE BY AREA UNDER PACKAGE
SCALE:30X

4222173/B 04/2018

NOTES: (continued)

6. Laser cutting apertures with trapezoidal walls and rounded corners may offer better paste release. IPC-7525 may have alternate design recommendations.

IMPORTANT NOTICE AND DISCLAIMER

TI PROVIDES TECHNICAL AND RELIABILITY DATA (INCLUDING DATA SHEETS), DESIGN RESOURCES (INCLUDING REFERENCE DESIGNS), APPLICATION OR OTHER DESIGN ADVICE, WEB TOOLS, SAFETY INFORMATION, AND OTHER RESOURCES “AS IS” AND WITH ALL FAULTS, AND DISCLAIMS ALL WARRANTIES, EXPRESS AND IMPLIED, INCLUDING WITHOUT LIMITATION ANY IMPLIED WARRANTIES OF MERCHANTABILITY, FITNESS FOR A PARTICULAR PURPOSE OR NON-INFRINGEMENT OF THIRD PARTY INTELLECTUAL PROPERTY RIGHTS.

These resources are intended for skilled developers designing with TI products. You are solely responsible for (1) selecting the appropriate TI products for your application, (2) designing, validating and testing your application, and (3) ensuring your application meets applicable standards, and any other safety, security, regulatory or other requirements.

These resources are subject to change without notice. TI grants you permission to use these resources only for development of an application that uses the TI products described in the resource. Other reproduction and display of these resources is prohibited. No license is granted to any other TI intellectual property right or to any third party intellectual property right. TI disclaims responsibility for, and you will fully indemnify TI and its representatives against, any claims, damages, costs, losses, and liabilities arising out of your use of these resources.

TI’s products are provided subject to TI’s Terms of Sale or other applicable terms available either on ti.com or provided in conjunction with such TI products. TI’s provision of these resources does not expand or otherwise alter TI’s applicable warranties or warranty disclaimers for TI products.

TI objects to and rejects any additional or different terms you may have proposed.

Mailing Address: Texas Instruments, Post Office Box 655303, Dallas, Texas 75265
Copyright © 2025, Texas Instruments Incorporated