UCC21530 4A, 6A, 5.7kV$_{RMS}$ Isolated Dual-Channel Gate Driver With 3.3mm Channel-to-Channel Spacing

1 Features

- Universal: dual low-side, dual high-side or half-bridge driver
- Wide body SOIC-14 (DWK) package
- 3.3mm spacing between driver channels
- Switching parameters:
  - 33ns typical propagation delay
  - 20ns minimum pulse width
  - 6ns maximum pulse-width distortion
- Common-mode transient immunity (CMTI) greater than 125V/ns
- 4A peak source, 6A peak sink output
- TTL and CMOS compatible inputs
- 3V to 18V input VCCI range
- Up to 25V VDD output drive supply
- Programmable overlap and dead time
- Junction temperature range –40 to +150°C
- Safety-related certifications (planned):
  - 8000V$_{PK}$ reinforced Isolation per DIN EN IEC 60747-17 (VDE 0884-17)
  - 5.7kV$_{RMS}$ isolation for 1 minute per UL 1577
  - CQC certification per GB4943.1-2022

2 Applications

- Solar string and central inverters
- AC-to-DC and DC-to-DC charging piles
- AC inverter and servo drive
- AC-to-DC and DC-to-DC power delivery
- Energy storage systems

3 Description

The UCC21530 is an isolated dual-channel gate driver with 4A source and 6A sink peak current. It is designed to drive IGBTs, Si MOSFETs, and SiC MOSFETs up to 5MHz.

The input side is isolated from the two output drivers by a 5.7kV$_{RMS}$ reinforced isolation barrier, with a minimum of 125V/ns common-mode transient immunity (CMTI). Internal functional isolation between the two secondary-side drivers allows a working voltage of up to 1850V.

This device can be configured as two low-side drivers, two high-side drivers, or a half-bridge driver with programmable dead time (DT). The EN pin pulled low shuts down both outputs simultaneously and allows for normal operation when left open or pulled high. As a fail-safe measure, primary-side logic failures force both outputs low.

The device accepts VDD supply voltages up to 25V. A wide input VCCI range from 3V to 18V makes the driver suitable for interfacing with both analog and digital controllers. All the supply voltage pins have under voltage lock-out (UVLO) protection.

Device Information

PART NUMBER	PACKAGE(1)	BODY SIZE (NOM)
UCC21530	DWK (SOIC 14)	10.30mm × 7.50mm

(1) For all available packages, see Section 13.

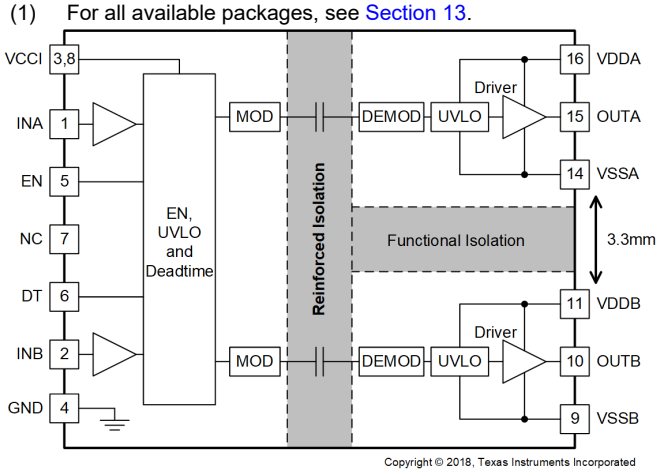

Functional Block Diagram

An IMPORTANT NOTICE at the end of this data sheet addresses availability, warranty, changes, use in safety-critical applications, intellectual property matters and other important disclaimers. PRODUCTION DATA.

Table of Contents

1 Features....1
2 Applications....1
3 Description....1
4 Pin Configuration and Functions....3
5 Specifications....4
5.1 Absolute Maximum Ratings....4
5.2 ESD Ratings....4
5.3 Recommended Operating Conditions....4
5.4 Thermal Information....4
5.5 Power Ratings....5
5.6 Insulation Specifications....6
5.7 Safety Limiting Values....7
5.8 Electrical Characteristics....7
5.9 Timing Requirements....8
5.10 Switching Characteristics....8
5.11 Insulation Characteristics Curves....9
5.12 Typical Characteristics....10
6 Parameter Measurement Information....14
6.1 Propagation Delay and Pulse Width Distortion....14
6.2 Rising and Falling Time....14
6.3 Input and Enable Response Time....14
6.4 Programable Dead Time....15
6.5 Power-Up UVLO Delay to OUTPUT....15
6.6 CMTI Testing....16
7 Detailed Description....17
7.1 Overview....17
7.2 Functional Block Diagram....17
7.3 Feature Description....18
7.4 Device Functional Modes....21
8 Application and Implementation....23
8.1 Application Information....23
8.2 Typical Application....23
9 Power Supply Recommendations....32
10 Layout....33
10.1 Layout Guidelines....33
10.2 Layout Example....34
11 Device and Documentation Support....36
11.1 Third-Party Products Disclaimer....36
11.2 Documentation Support....36
11.3 Receiving Notification of Documentation Updates....36
11.4 Support Resources....36
11.5 Trademarks....36
11.6 Glossary....36
12 Revision History....36
13 Mechanical, Packaging, and Orderable Information....38

Copyright © 2024 Texas Instruments Incorporated

4 Pin Configuration and Functions

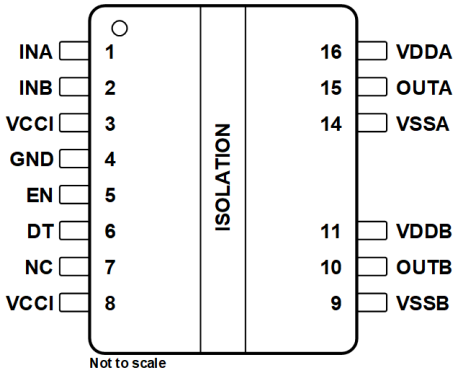

Figure 4-1. DWK Package, 14-Pin SOIC (Top View)

Table 4-1. Pin Functions

PIN		TYPE[(1)]	DESCRIPTION
NAME	NO.		
DT	6	I	DT pin configuration: • Tying DT to VCCI disables the DT feature and allows the outputs to overlap. • Placing a resistor (R_{DT}) between DT and GND adjusts dead time according to the equation: DT (in ns) = 10 × R_{DT} (in kΩ). TI recommends bypassing this pin with a ≤1nF ceramic capacitor close to DT pin to achieve better noise immunity. It is not recommended to leave DT floating.
EN	5	I	Enable both driver outputs if asserted high, disable the output if set low. It is recommended to tie this pin to VCCI if not used to achieve better noise immunity. Bypass using a ≈ 1-nF low ESR/ESL capacitor close to EN pin when connecting to a micro controller with distance.
GND	4	P	Primary-side ground reference. All signals in the primary side are referenced to this ground.
INA	1	I	Input signal for A channel. INA input has a TTL/CMOS compatible input threshold. This pin is pulled low internally if left open. It is recommended to tie this pin to ground if not used to achieve better noise immunity.
INB	2	I	Input signal for B channel. INB input has a TTL/CMOS compatible input threshold. This pin is pulled low internally if left open. It is recommended to tie this pin to ground if not used to achieve better noise immunity.
NC	7	–	No internal connection. This pin can be left floating, tied to VCCI, or tied to GND.
OUTA	15	O	Output of driver A. Connect to the gate of the A channel FET or IGBT.
OUTB	10	O	Output of driver B. Connect to the gate of the B channel FET or IGBT.
VCCI	3	P	Primary-side supply voltage. Locally decoupled to GND using a low ESR/ESL capacitor located as close to the device as possible.
VCCI	8	P	Primary-side supply voltage. This pin is internally shorted to pin 3.
VDDA	16	P	Secondary-side power for driver A. Locally decoupled to VSSA using a low ESR/ESL capacitor located as close to the device as possible.
VDDB	11	P	Secondary-side power for driver B. Locally decoupled to VSSB using low ESR/ESL capacitor located as close to the device as possible.
VSSA	14	P	Ground for secondary-side driver A. Ground reference for secondary side A channel.
VSSB	9	P	Ground for secondary-side driver B. Ground reference for secondary side B channel.

(1) P =Power, I= Input, O= Output

5 Specifications

5.1 Absolute Maximum Ratings

over operating free-air temperature range (unless otherwise noted)[1]

		MIN	MAX	UNIT
Input bias pin supply voltage	VCCI to GND	–0.3	20	V
Driver bias supply	VDDA-VSSA, VDDB-VSSB	–0.3	30	V
Output signal voltage	OUTA to VSSA, OUTB to VSSB	–0.3	VDDA/B + 0.3	V
	OUTA to VSSA, OUTB to VSSB, Transient for 200 ns	–2	VDDA/B + 0.3	V
Input signal voltage	INA, INB, EN, DT to GND	–0.3	VCCI + 0.3	V
	INA, INB Transient for 50ns	–5	VCCI + 0.3	V
Channel to channel internal isolation voltage	|VSSA-VSSB| in DWK package		1850	V
Junction temperature, T_J [2]		–40	150	℃
Storage temperature, T_{stg}		–65	150	℃

(1) Stresses beyond those listed under *Absolute Maximum Rating* may cause permanent damage to the device. These are stress ratings only, which do not imply functional operation of the device at these or any other conditions beyond those indicated under *Recommended Operating Condition*. Exposure to absolute-maximum-rated conditions for extended periods may affect device reliability.
(2) To maintain the recommended operating conditions for TJ, see the Section 6.4

5.2 ESD Ratings

			VALUE	UNIT
$V_{(ESD)}$	Electrostatic discharge	Human body model (HBM), per ANSI/ESDA/JEDEC JS-001[1]	±2000	V
		Charged device model (CDM), per JEDEC specification JESD22-C101[2]	±1000	

(1) JEDEC document JEP155 states that 500-V HBM allows safe manufacturing with a standard ESD control process.
(2) JEDEC document JEP157 states that 250-V CDM allows safe manufacturing with a standard ESD control process.

5.3 Recommended Operating Conditions

over operating free-air temperature range (unless otherwise noted)

			MIN	MAX	UNIT
V_{CCI}	VCCI Input supply voltage		3	18	V
VDDA, VDDB	Driver output bias supply refer to VSS	UCC21530B 8-V UVLO version	9.2	25	V
VDDA, VDDB	Driver output bias supply refer to VSS	UCC21530 12-V UVLO version	13.5	25	V
T_J	Junction temperature		–40	150	℃

5.4 Thermal Information

THERMAL METRIC[1]		UCC21530 DWK-14 (SOIC) 14 PINS	UNIT
$R_{\theta JA}$	Junction-to-ambient thermal resistance	74.1	°C/W
$R_{\theta JC(top)}$	Junction-to-case (top) thermal resistance	34.1	°C/W
$R_{\theta JB}$	Junction-to-board thermal resistance	32.8	°C/W
Ψ_{JT}	Junction-to-top(center) characterization parameter	23.7	°C/W

Copyright © 2024 Texas Instruments Incorporated

5.4 Thermal Information (continued)

THERMAL METRIC[1]		UCC21530 DWK-14 (SOIC) 14 PINS	UNIT
Ψ_{JB}	Junction-to-board characterization parameter	32.1	°C/W

(1) For more information about traditional and new thermal metrics, see the Semiconductor and IC Package Thermal Metrics application report.

5.5 Power Ratings

PARAMETER		TEST CONDITIONS	MIN	TYP	MAX	UNIT
P_D	Maximum power dissipation (both sides)	VCCI = 5V, VDDA/VDDB = 20V, INA/B = 3.3V, 460kHz 50% duty cycle square wave, CL=2.2nF, T_J=150℃, T_A=25℃			950	mW
P_{DI}	Maximum power dissipation by transmitter side				50	mW
P_{DA}, P_{DB}	Maximum power dissipation by each driver side				450	mW

5.6 Insulation Specifications

PARAMETER		TEST CONDITIONS	SPECIFICATION	UNIT
General				
CLR	External clearance[1]	Shortest terminal-to-terminal distance through air	>8	mm
CPG	External Creepage[1]	Shortest terminal-to-terminal distance across the package surface	>8	mm
DTI	Distance through the insulation	Minimum internal gap (internal clearance)	>17	µm
CTI	Comparative tracking index	DIN EN 60112 (VDE 0303-11); IEC 60112	> 600	V
	Material Group	According to IEC 60664-1	I	
	Overvoltage category IEC 60664-1	Rated mains voltage ≤ 600 V_{RMS}	I-IV	
		Rated mains voltage ≤ 1000 V_{RMS}	I-III	
DIN EN IEC 60747-17 (VDE 0884-17) [2]				
V_{IORM}	Maximum repetitive peak isolation voltage	AC voltage (bipolar)	2121	V_{PK}
V_{IOWM}	Maximum isolation working voltage	AC voltage (sine wave); time-dependent dielectric breakdown (TDDB) test	1500	V_{RMS}
		DC voltage	2121	V_{DC}
V_{IMP}	Maximum inpulse voltage	Tested in air, 1.2/50-µs waveform per IEC 62368-1	7692	V_{PK}
V_{IOTM}	Maximum transient isolation voltage	$V_{TEST} = V_{IOTM}$, t = 60 s (qualification) $V_{TEST} = 1.2 \times V_{IOTM}$, t = 1 s (100% production)	8000	V_{PK}
V_{IOSM}	Maximum surge isolation voltage[3]	$V_{IOSM} \geq 1.3 \times V_{IMP}$; Tested in oil (qualification test), 1.2/50-µs waveform per IEC 62368-1	10000	V_{PK}
q_{pd}	Apparent charge[4]	Method a: After I/O safety test subgroup 2/3, $V_{ini} = V_{IOTM}$, t_{ini} = 60 s; $V_{pd(m)} = 1.2 \times V_{IORM}$, t_m = 10 s	≤5	pC
		Method a: After environmental tests subgroup 1, $V_{ini} = V_{IOTM}$, t_{ini} = 60 s; $V_{pd(m)} = 1.6 \times V_{IORM}$, t_m = 10 s	≤5	
		Method b1: At routine test (100% production) and preconditioning (type test), $V_{ini} = 1.2 \times V_{IOTM}$, t_{ini} = 1 s; $V_{pd(m)} = 1.875 \times V_{IORM}$, t_m = 1 s	≤5	
C_{IO}	Barrier capacitance, input to output[5]	$V_{IO} = 0.4 \times \sin(2\pi ft)$, f = 1 MHz	~1.2	pF
R_{IO}	Insulation resistance, input to output[5]	V_{IO} = 500 V, T_A = 25°C	$>10^{12}$	Ω
		V_{IO} = 500 V, 100°C ≤ T_A ≤ 125°C	$>10^{11}$	
		V_{IO} = 500 V at T_S = 150°C	$>10^{9}$	
	Pollution degree		2	
	Climatic category		40/125/21	
UL 1577				
V_{ISO}	Withstand isolation voltage	$V_{TEST} = V_{ISO}$ = 5700 V_{RMS}, t = 60 s (qualification), $V_{TEST} = 1.2 \times V_{ISO}$ = 6840 V_{RMS}, t = 1 s (100% production)	5700	V_{RMS}

(1) Creepage and clearance requirements should be applied according to the specific equipment isolation standards of an application. Care should be taken to maintain the creepage and clearance distance of a board design to ensure that the mounting pads of the isolator on the printed-circuit board do not reduce this distance. Creepage and clearance on a printed-circuit board become equal in certain cases. Techniques such as inserting grooves, ribs, or both on a printed-circuit board are used to help increase these specifications.
(2) This coupler is suitable for *safe electrical insulation* only within the safety ratings. Compliance with the safety ratings shall be ensured by means of suitable protective circuits.
(3) Testing is carried out in air or oil to determine the intrinsic surge immunity of the isolation barrier.
(4) Apparent charge is electrical discharge caused by a partial discharge (pd).
(5) All pins on each side of the barrier tied together creating a two-pin device.

Copyright © 2024 Texas Instruments Incorporated

5.7 Safety Limiting Values

PARAMETER		TEST CONDITIONS	SIDE	MIN	TYP	MAX	UNIT
I_S	Safety output supply current	$R_{\theta\ JA}$ = 74.1°C/W, $V_{DDA/B}$ = 15 V, T_J = 150°C, T_A = 25°C	DRIVER A, DRIVER B			53	mA
		$R_{\theta\ JA}$ = 74.1°C/W, $V_{DDA/B}$ = 25 V, T_J = 150°C, T_A = 25°C				32	
P_S	Safety supply power	$R_{\theta\ JA}$ = 74.1°C/W, T_J = 150°C, T_A = 25°C	INPUT			50	mW
			DRIVER A			800	
			DRIVER B			800	
			TOTAL			1650	
T_S	Maximum safety temperature(1)					150	°C

(1) The maximum safety temperature, T_S, has the same value as the maximum junction temperature, T_J , specified for the device. The I_S and P_S parameters represent the safety current and safety power respectively. The maximum limits of I_S and P_S should not be exceeded. These limits vary with the ambient temperature, T_A. The junction-to-air thermal resistance, R_{qJA}, in the Thermal Information table is that of a device installed on a high-K test board for leaded surface-mount packages. Use these equations to calculate the value for each parameter: $T_J = T_A + R_{qJA} * P$, where P is the power dissipated in the device. $T_{J(max)} = T_S = T_A + R_{qJA} * P_S$, where $T_{J(max)}$ is the maximum allowed junction temperature. $P_S = I_S * V_I$, where VI is the maximum supply voltage.

5.8 Electrical Characteristics

V_{VCCI} = 3.3 V or 5 V, 0.1-µF capacitor from VCCI to GND, V_{VDDA} = V_{VDDB} = 15V (for 8V and 12V UVLO variants), 1-µF capacitor from VDDA and VDDB to VSSA and VSSB, T_J = –40°C to +150°C, unless otherwise noted

PARAMETER		TEST CONDITIONS	MIN	TYP	MAX	UNIT
SUPPLY CURRENTS						
I_{VCCI}	VCCI quiescent current	V_{INA} = 0 V, V_{INB} = 0 V		1.4	2.0	mA
I_{VDDA}, I_{VDDB}	VDDA and VDDB quiescent current	V_{INA} = 0 V, V_{INB} = 0 V		1.0	2.5	mA
I_{VCCI}	VCCI operating current	(f = 500 kHz) current per channel		3	3.5	mA
I_{VDDA}, I_{VDDB}	VDDA and VDDB operating current	(f = 500 kHz) current per channel, C_{OUT} = 100 pF		2.5	4.2	mA
VCC SUPPLY VOLTAGE UNDERVOLTAGE THRESHOLDS						
V_{VCCI_ON}	UVLO Rising threshold		2.55	2.7	2.85	V
V_{VCCI_OFF}	UVLO Falling threshold		2.35	2.5	2.65	V
V_{VCCI_HYS}	UVLO Threshold hysteresis			0.2		V
VDD SUPPLY VOLTAGE UNDERVOLTAGE THRESHOLDS						
V_{VDDA_ON}, V_{VDDB_ON}	UVLO Rising threshold	8-V UVLO	7.7	8.5	8.9	V
V_{VDDA_OFF}, V_{VDDB_OFF}	UVLO Falling threshold	8-V UVLO	7.2	7.9	8.4	V
V_{VDDA_HYS}, V_{VDDB_HYS}	UVLO Threshold hysteresis	8-V UVLO		0.6		V
V_{VDDA_ON}, V_{VDDB_ON}	UVLO Rising threshold	12-V UVLO	11.7	12.5	13.3	V
V_{VDDA_OFF}, V_{VDDB_OFF}	UVLO Falling threshold	12-V UVLO	10.7	11.5	12.3	V
V_{VDDA_HYS}, V_{VDDB_HYS}	UVLO Threshold hysteresis	12-V UVLO		1		V
INA, INB AND ENABLE						
V_{INAH}, V_{INBH}, V_{ENH}	Input high threshold voltage		1.2	1.8	2	V
V_{INAL}, V_{INBL}, V_{ENL}	Input low threshold voltage		0.8	1	1.2	V
V_{INA_HYS}, V_{INB_HYS}, V_{EN_HYS}	Input threshold hysteresis			0.8		V
V_{INA}, V_{INB}	Negative transient, ref to GND, 100 ns pulse	Not production tested, bench test only	–5			V
OUTPUT						

5.8 Electrical Characteristics (continued)

V_{VCCI} = 3.3 V or 5 V, 0.1-µF capacitor from VCCI to GND, V_{VDDA} = V_{VDDB} = 15V (for 8V and 12V UVLO variants), 1-µF capacitor from VDDA and VDDB to VSSA and VSSB, T_J = –40°C to +150°C, unless otherwise noted

PARAMETER		TEST CONDITIONS	MIN	TYP	MAX	UNIT
I_{OA+}, I_{OB+}	Peak output source current	C_{VDD} = 10 µF, C_{LOAD} = 0.18 µF, f = 1 kHz, bench measurement		4		A
I_{OA-}, I_{OB-}	Peak output sink current	C_{VDD} = 10 µF, C_{LOAD} = 0.18 µF, f = 1 kHz, bench measurement		6		A
R_{OHA}, R_{OHB}	Output resistance at high state	I_{OUT} = –10 mA, T_A = 25°C, R_{OHA}, R_{OHB} do not represent drive pull-up performance. See t_{RISE} in Section 5.10 and Section 7.3.4 for details.		5		Ω
R_{OLA}, R_{OLB}	Output resistance at low state	I_{OUT} = 10 mA, T_A = 25°C		0.55		Ω
V_{OHA}, V_{OHB}	Output voltage at high state	V_{VDDA}, V_{VDDB} = 15 V, I_{OUT} = –10 mA, T_A = 25°C		14.95		V
V_{OLA}, V_{OLB}	Output voltage at low state	V_{VDDA}, V_{VDDB} = 15 V, I_{OUT} = 10 mA, T_A = 25°C		5.5		mV

5.9 Timing Requirements

DEADTIME AND OVERLAP PROGRAMMING		MIN	NOM	MAX	UNIT
DT	DT pin tied to VCCI	Ovelap determined by INA, INB	Ovelap determined by INA, INB	Ovelap determined by INA, INB	ns
DT	Dead time, R_{DT} = 10 kΩ	80	100	120	ns
DT	Dead time, R_{DT} = 20 kΩ	160	200	240	ns
DT	Dead time, R_{DT} = 50 kΩ	400	500	600	ns

5.10 Switching Characteristics

V_{VCCI} = 3.3 V or 5 V, 0.1-µF capacitor from VCCI to GND, V_{VDDA} = V_{VDDB} = 15 (for 8V and 12V UVLO variants), 1-µF capacitor from VDDA and VDDB to VSSA and VSSB, load capacitance C_{OUT} = 0 pF, T_J = –40°C to +150°C. (over recommended operating conditions unless otherwise noted)

PARAMETER		TEST CONDITIONS	MIN	TYP	MAX	UNIT
t_{RISE}	Output rise time, 20% to 80% measured points	C_{OUT} = 1.8 nF		6	16	ns
t_{FALL}	Output fall time, 90% to 10% measured points	C_{OUT} = 1.8 nF		7	12	ns
t_{PWmin}	Minimum pulse width	Output off for less than minimum, C_{OUT} = 0pF			20	ns
t_{PDHL}	Propagation delay from INx to OUTx falling edges		26	33	45	ns
t_{PDLH}	Propagation delay from INx to OUTx rising edges		26	33	45	ns
t_{PWD}	Pulse width distortion $\lvert t_{PDLH} – t_{PDHL}\rvert$				6	ns
t_{DM}	Propagation Delay Matching for Dual Channel Driver	Input Pulse Width = 100ns, 500kHz, T_J = -40°C to -10°C $\lvert t_{PDLHA} – t_{PDLHB}\rvert$, $\lvert t_{PDHLA} – t_{PDHLB}\rvert$			6.5	ns
		Input Pulse Width = 100ns, 500kHz, T_J = -10°C to +150°C $\lvert t_{PDLHA} – t_{PDLHB}\rvert$, $\lvert t_{PDHLA} – t_{PDHLB}\rvert$			5	ns
t_{VCCI+} to OUT	VCCI Power-up Delay Time: UVLO Rise to OUTA, OUTB	INA or INB tied to VCCI			50	µs
t_{VDD+} to OUT	VDDA. VDDB Power-up Delay Time: UVLO Rise to OUTA, OUTB	INA or INB tied to VCCI			10	µs
$\lvert CM_H\rvert$	High-level common-mode transient immunity (See Section 6.6)	Slew rate of GND versus VSSA/B, INA and INB both are tied to GND or VCCI; V_{CM} = 1500V	125			V/ns
$\lvert CM_L\rvert$	Low-level common-mode transient immunity (See Section 6.6)	Slew rate of GND versus VSSA/B, INA and INB both are tied to GND or VCCI; V_{CM} = 1500V	125			V/ns

Copyright © 2024 Texas Instruments Incorporated

5.11 Insulation Characteristics Curves

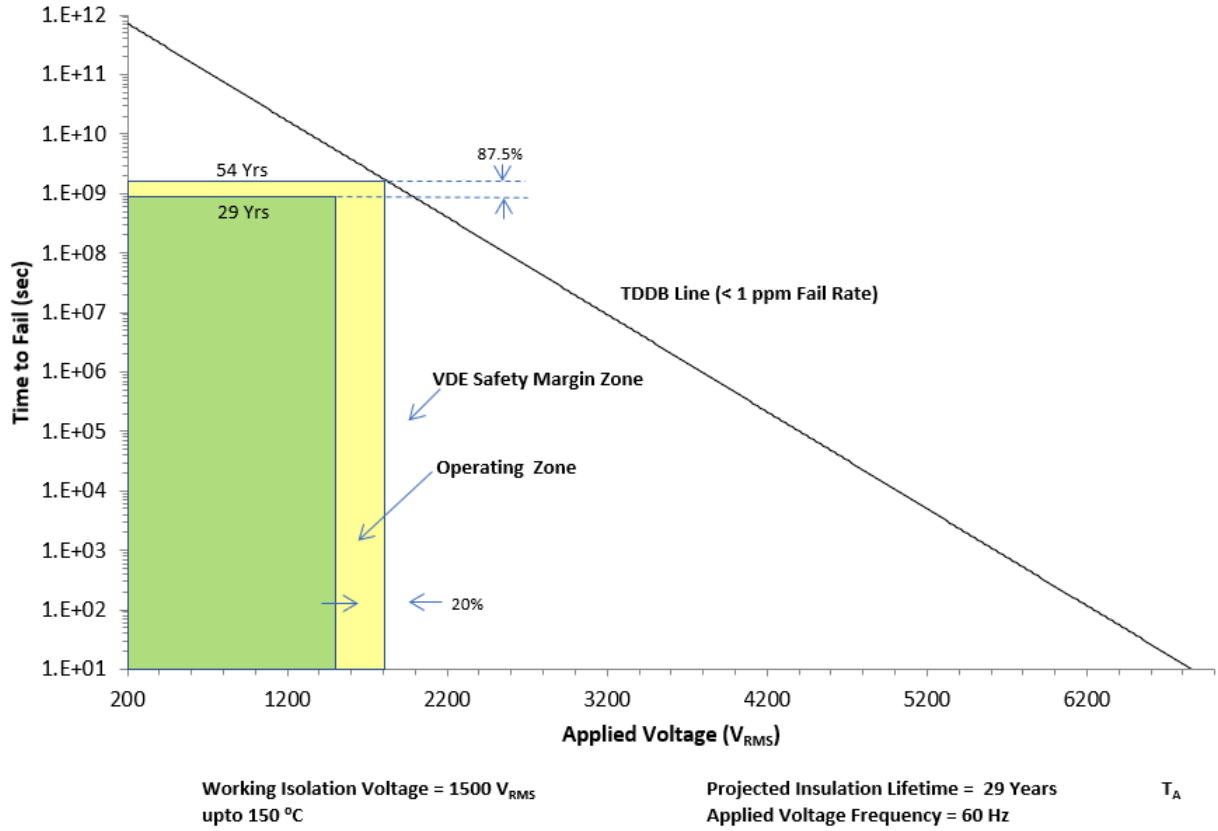

Figure 5-1. Reinforced Isolation Capacitor Life Time Projection

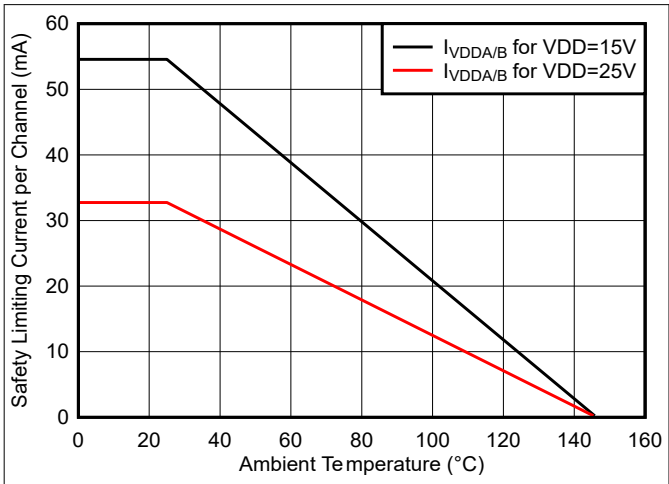

Figure 5-2. Thermal Derating Curve for Safety-Related Limiting Current (Current in Each Channel with Both Channels Running Simultaneously),

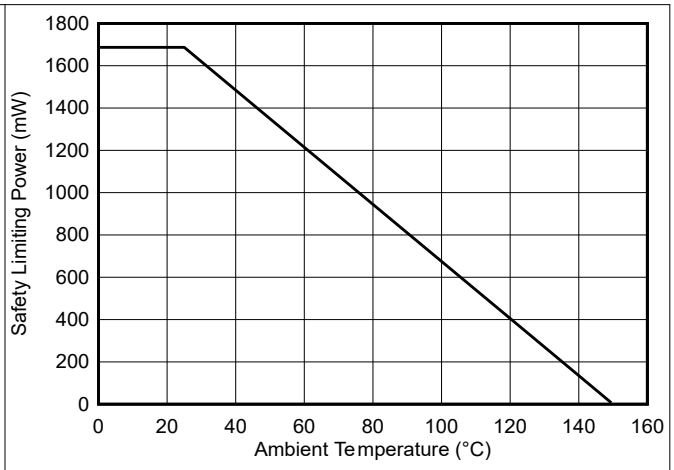

Figure 5-3. Thermal Derating Curve for Safety-Related Limiting Power

5.12 Typical Characteristics

VDDA = VDDB = 15V (8V and 12V UVLO variants) , VCCI = 3.3 V, T_A = 25°C, No load. (unless otherwise noted)

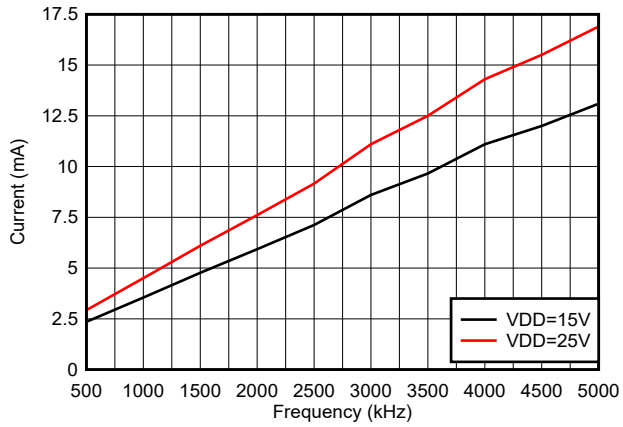

No load

Figure 5-4. Per Channel Current Consumption vs Frequency

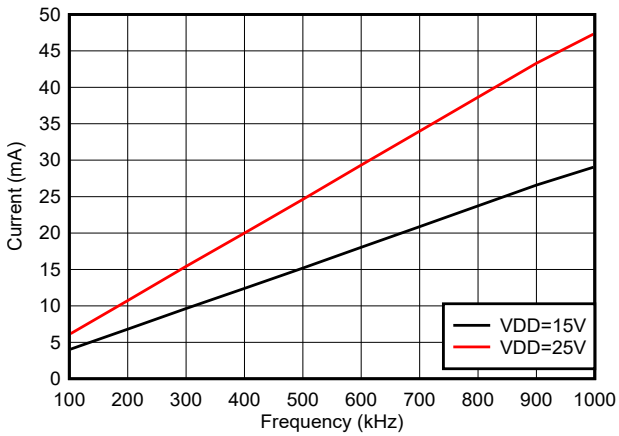

Figure 5-5. Per Channel Current Consumption ($I_{VDDA/B}$) vs Frequency (1-nF Load, VDD=15V or 25V)

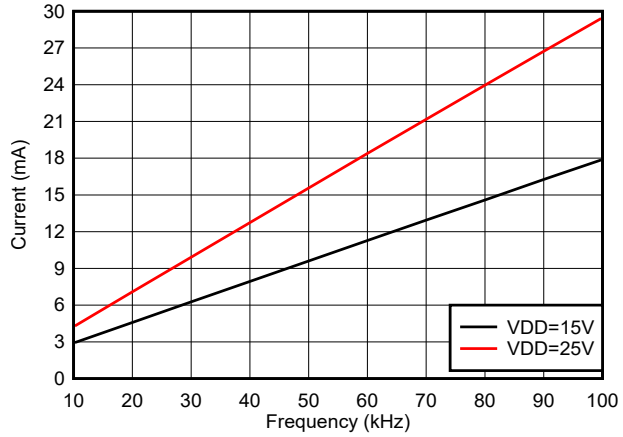

Figure 5-6. Per Channel Current Consumption ($I_{VDDA/B}$) vs Frequency (10-nF Load, VDD=15 or 25V)

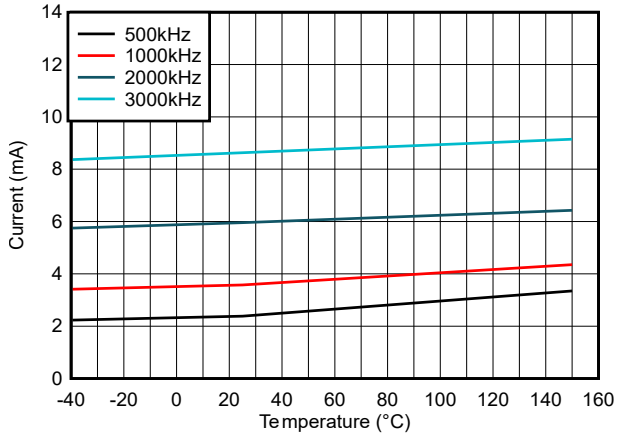

Figure 5-7. Per Channel ($I_{VDDA/B}$) Supply Current vs Temperature (No Load, Different Switching Frequencies)

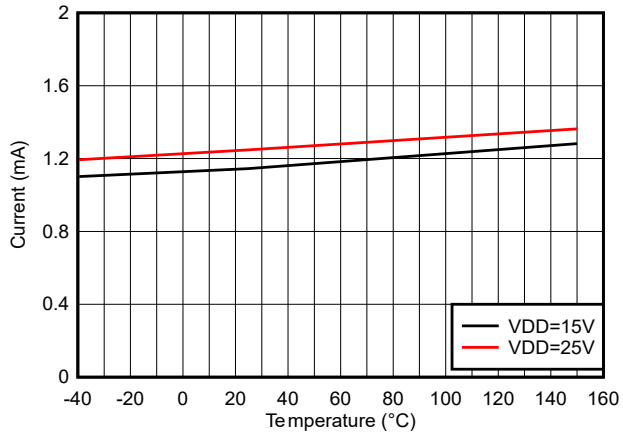

Figure 5-8. Per Channel ($I_{VDDA/B}$) Quiescent Supply Current vs Temperature (No Load, Input Low, No Switching)

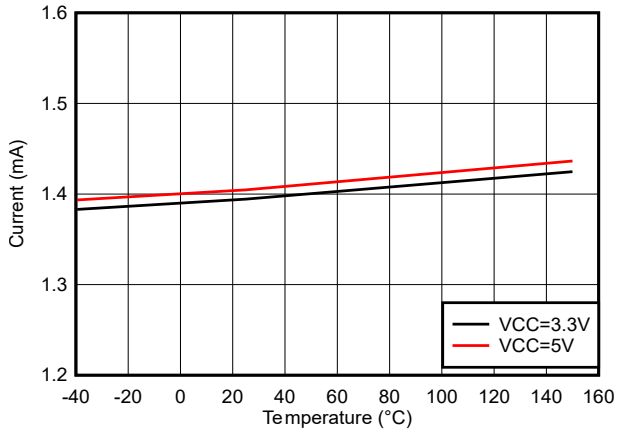

Figure 5-9. I_{VCCI} Quiescent Supply Current vs Temperature (No Load, Input Low, No Switching)

Copyright © 2024 Texas Instruments Incorporated

5.12 Typical Characteristics (continued)

VDDA = VDDB = 15V (8V and 12V UVLO variants) , VCCI = 3.3 V, T_A = 25°C, No load. (unless otherwise noted)

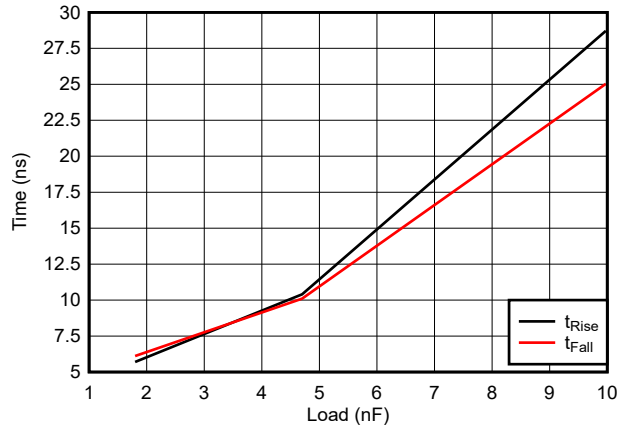

Figure 5-10. Rising and Falling Times vs Load

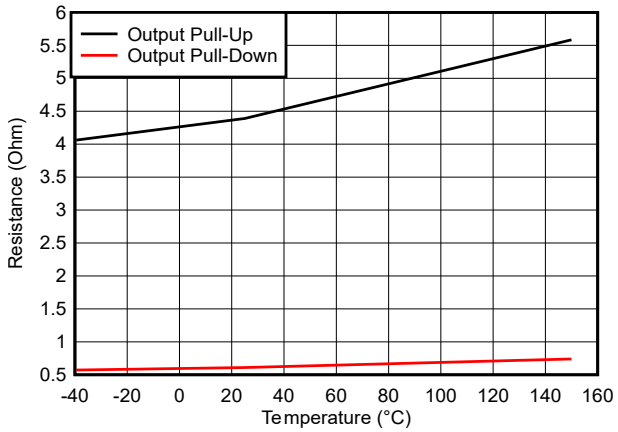

Figure 5-11. Output Resistance vs Temperature

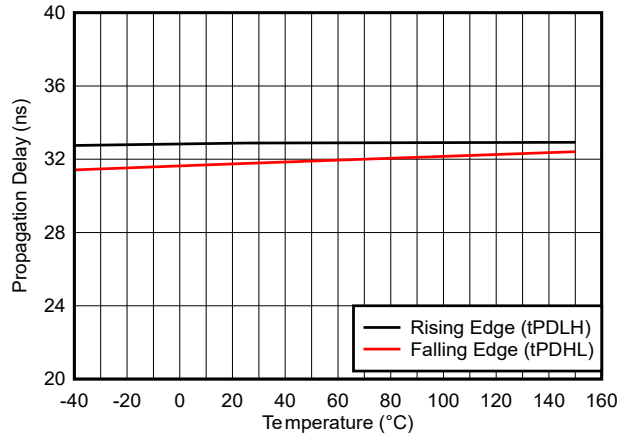

Figure 5-12. Propagation Delay vs Temperature

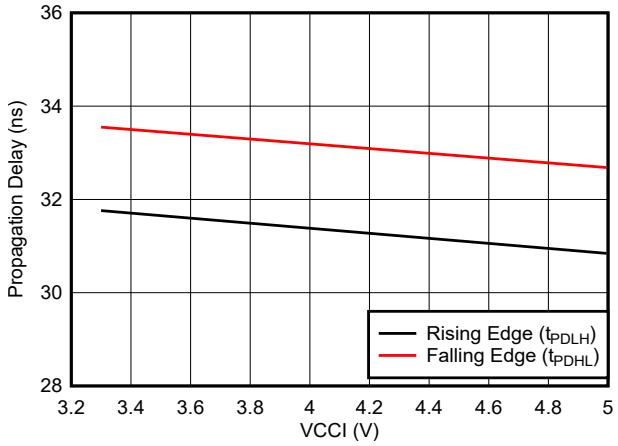

Figure 5-13. Propagation Delay vs VCCI

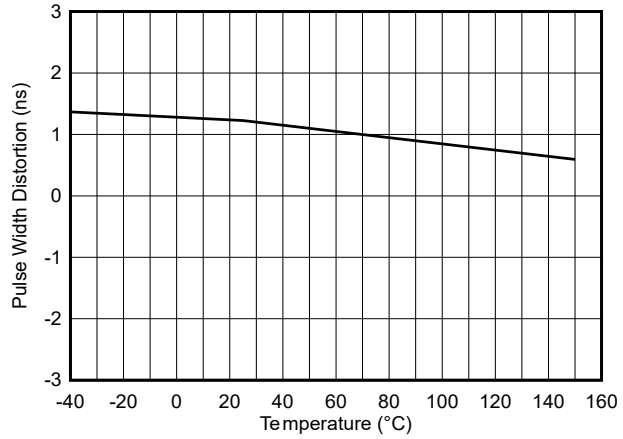

Figure 5-14. Pulse Width Distortion vs Temperature

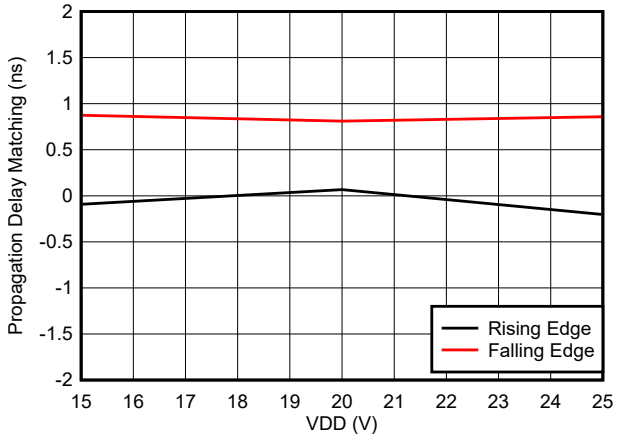

Figure 5-15. Propagation Delay Matching (t_{DM}) vs VDD

5.12 Typical Characteristics (continued)

VDDA = VDDB = 15V (8V and 12V UVLO variants) , VCCI = 3.3 V, T_A = 25°C, No load. (unless otherwise noted)

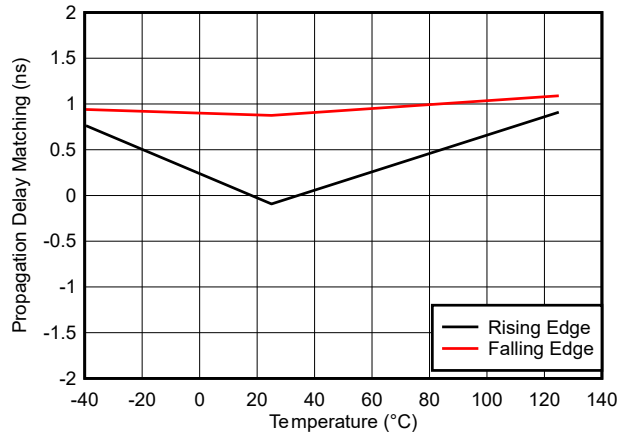

Figure 5-16. Propagation Delay Matching (t_{DM}) vs Temperature

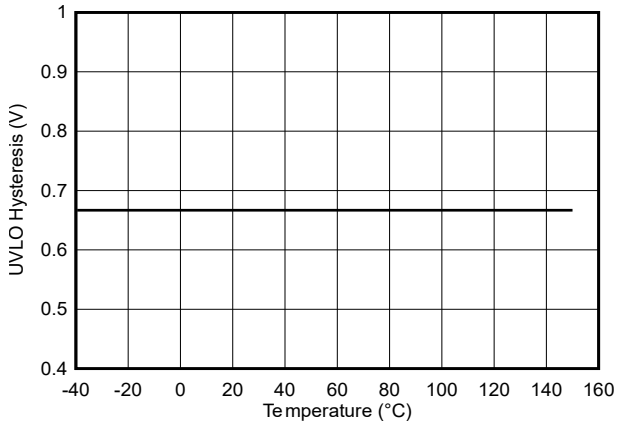

Figure 5-17. 8-V UVLO Hysteresis vs Temperature

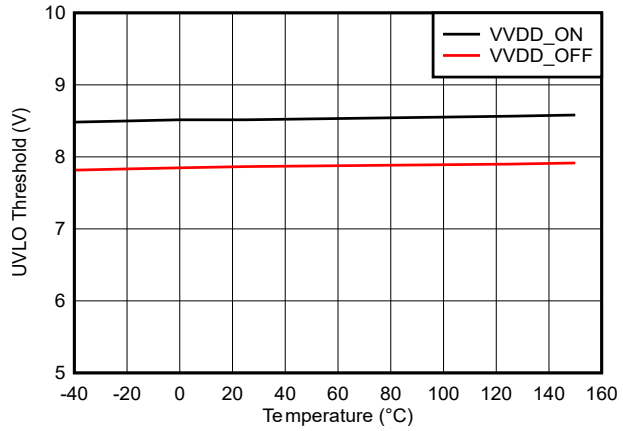

Figure 5-18. 8-V UVLO Threshold vs Temperature

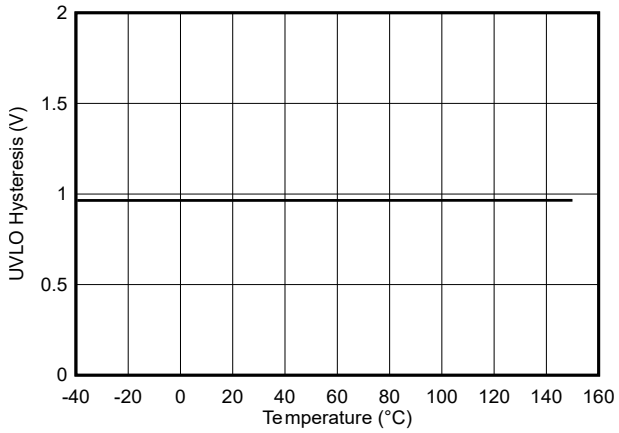

Figure 5-19. 12-V UVLO Hysteresis vs Temperature

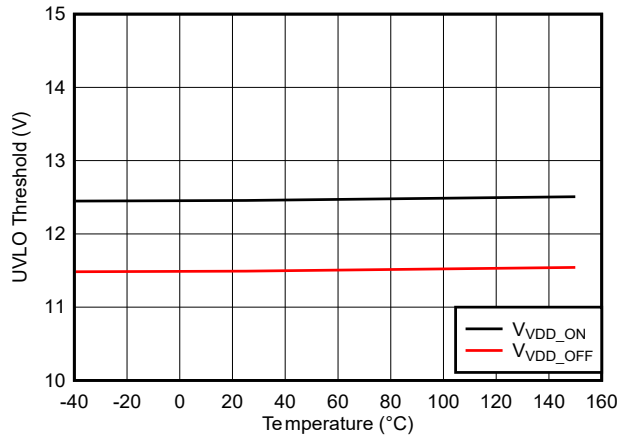

Figure 5-20. 12-V UVLO Threshold vs Temperature

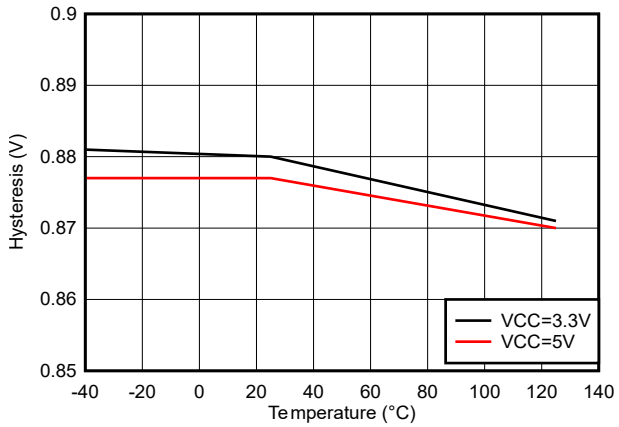

Figure 5-21. INA/B/EN Hysteresis vs Temperature

Copyright © 2024 Texas Instruments Incorporated

5.12 Typical Characteristics (continued)

VDDA = VDDB = 15V (8V and 12V UVLO variants) , VCCI = 3.3 V, T_A = 25°C, No load. (unless otherwise noted)

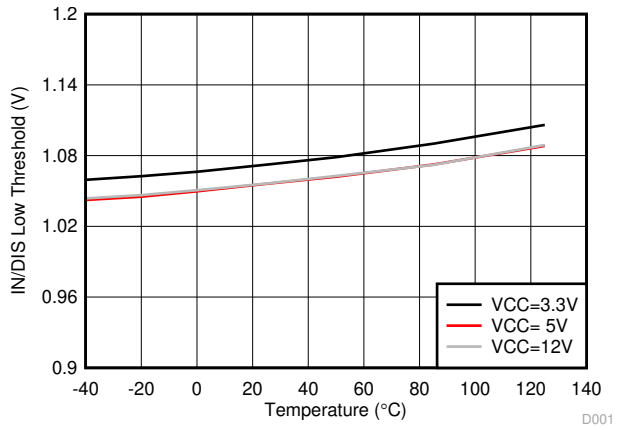

Figure 5-22. INA/B/EN Low Threshold

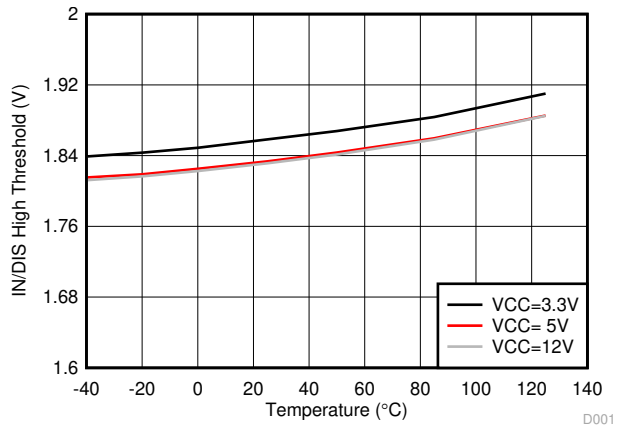

Figure 5-23. INA/B/EN High Threshold

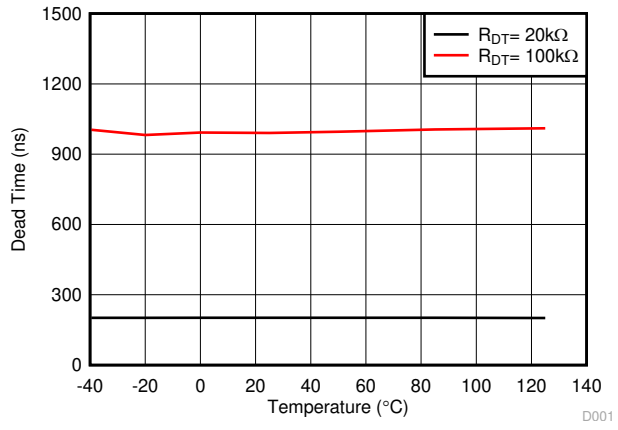

Figure 5-24. Dead Time vs Temperature

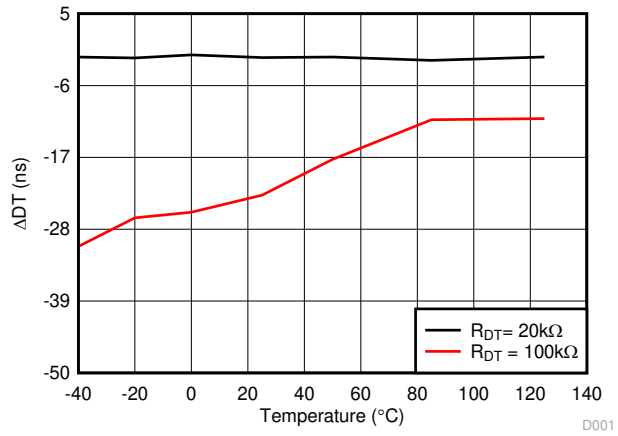

Figure 5-25. Dead Time Matching vs Temperature

6 Parameter Measurement Information

6.1 Propagation Delay and Pulse Width Distortion

Figure 6-1 shows how one calculates pulse width distortion (t_{PWD}) and delay matching (t_{DM}) from the propagation delays of channels A and B. It can be measured by ensuring that both inputs are in phase and disabling the dead time function by shorting the DT Pin to VCC.

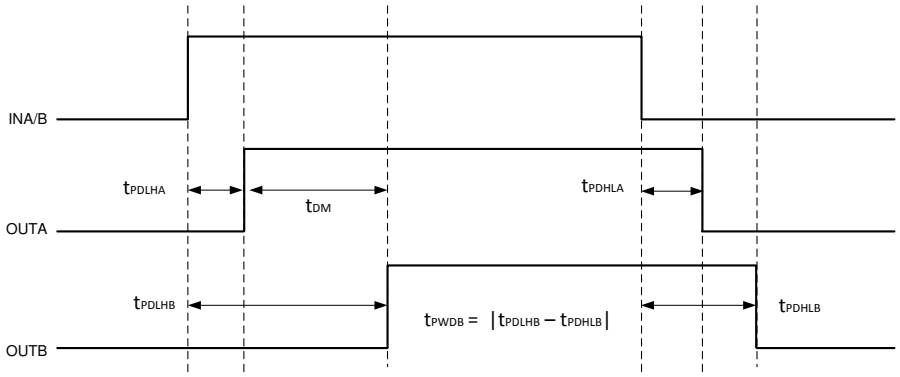

Figure 6-1. Overlapping Inputs, Dead Time Disabled

6.2 Rising and Falling Time

Figure 6-2 shows the criteria for measuring rising (t_{RISE}) and falling (t_{FALL}) times. For more information on how short rising and falling times are achieved see Section 7.3.4.

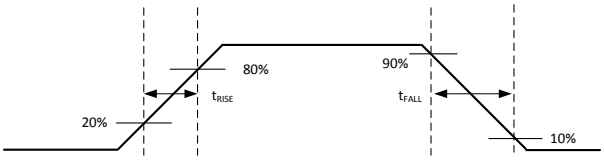

Figure 6-2. Rising and Falling Time Criteria

6.3 Input and Enable Response Time

Figure 6-3 shows the response time of the enable function. For more information, see Section 7.4.1.

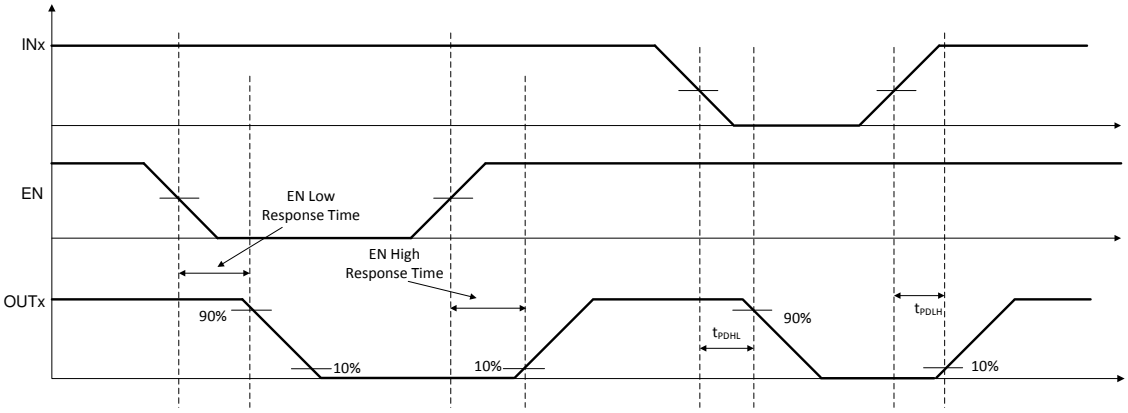

Figure 6-3. Enable Pin Timing

Copyright © 2024 Texas Instruments Incorporated

6.4 Programable Dead Time

Tying DT to VCCI disables DT feature and allows the outputs to overlap. Placing a resistor (R_{DT}) between DT pin and GND can adjust the dead time. For more details on dead time, refer to Section 7.4.2.

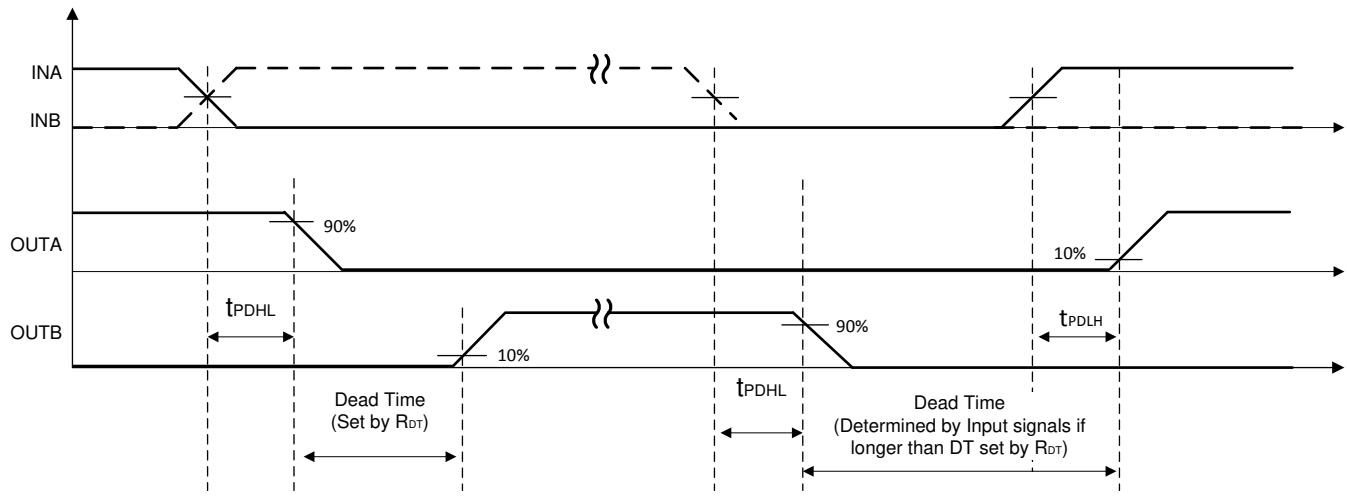

Figure 6-4. Dead-Time Switching Parameters

6.5 Power-Up UVLO Delay to OUTPUT

Whenever the supply voltage VCCI crosses from below the falling threshold V_{VCCI_OFF} to above the rising threshold V_{VCCI_ON}, and whenever the supply voltage VDDx crosses from below the falling threshold V_{VDDx_OFF} to above the rising threshold V_{VDDx_ON}, there is a delay before the outputs begin responding to the inputs. For VCCI UVLO this delay is defined as $t_{VCCI+\ to\ OUT}$, and has a maximum of 50 µs. For VDDx UVLO this delay is defined as $t_{VDD+\ to\ OUT}$, and has a maximum of 10 µs. TI recommends allowing some margin before driving input signals, to ensure the driver VCCI and VDD bias supplies are fully activated. Figure 6-5 and Figure 6-6 show the power-up UVLO delay timing diagram for VCCI and VDD.

Whenever the supply voltage VCCI crosses below the falling threshold V_{VCCI_OFF}, or VDDx crosses below the falling threshold V_{VDDx_OFF}, the outputs stop responding to the inputs and are held low within <2 µs. This asymmetric delay is designed to ensure safe operation during VCCI or VDDx brownouts.

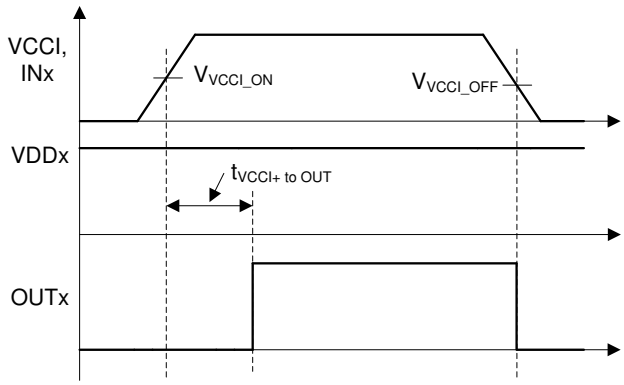

Figure 6-5. VCCI Power-Up UVLO Delay

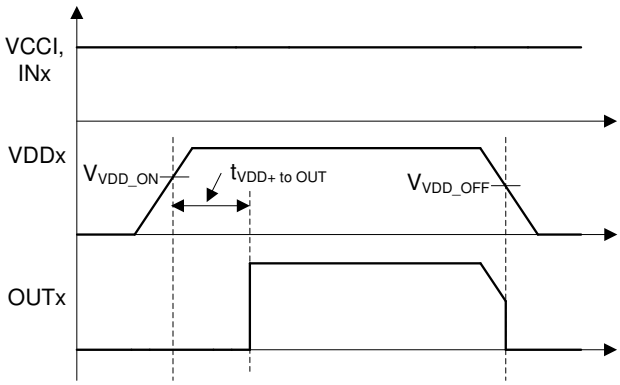

Figure 6-6. VDDA/B Power-Up UVLO Delay

6.6 CMTI Testing

Figure 6-7 is a simplified diagram of the CMTI testing configuration.

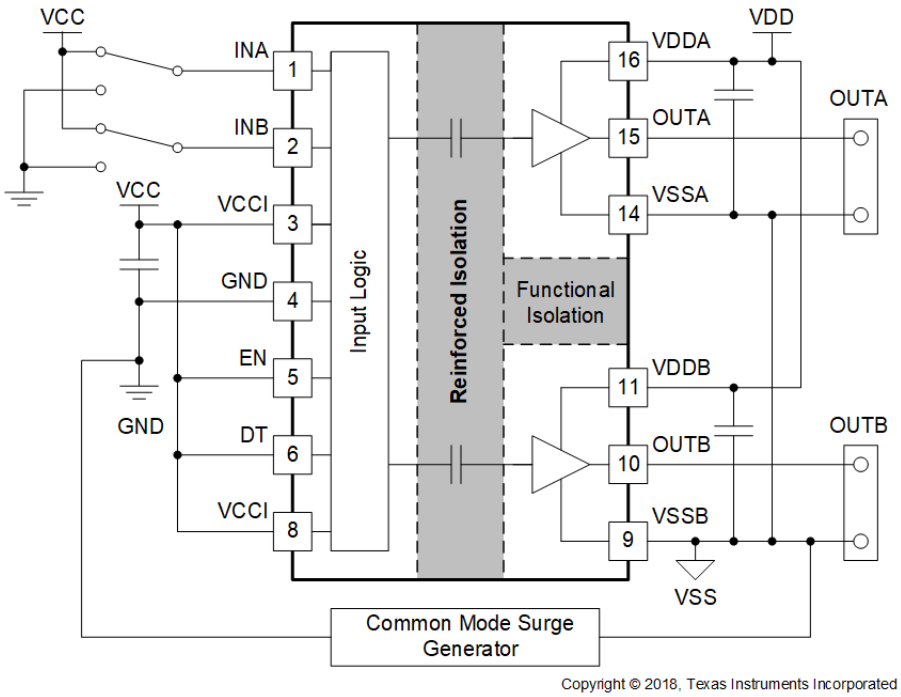

Figure 6-7. Simplified CMTI Testing Setup

Copyright © 2024 Texas Instruments Incorporated

7 Detailed Description

7.1 Overview

In order to switch power transistors rapidly and reduce switching power losses, high-current gate drivers are often placed between the output of control devices and the gates of power transistors. There are several instances where controllers are not capable of delivering sufficient current to drive the gates of power transistors. This is especially the case with digital controllers, since the input signal from the digital controller is often a 3.3-V logic signal capable of only delivering a few mA.

The UCC21530 is a flexible dual gate driver which can be configured to fit a variety of power supply and motor drive topologies, as well as drive several types of transistors, including SiC MOSFETs. UCC21530 has many features that allow it to integrate well with control circuitry and protect the transistors it drives such as: resistor-programmable dead time (DT) control, an EN pin, and under voltage lock out (UVLO) for both input and output voltages. The UCC21530 also holds its outputs low when the inputs are left open or when the input pulse is not wide enough. The driver inputs are CMOS and TTL compatible for interfacing to digital and analog power controllers alike. Each channel is controlled by its respective input pins (INA and INB), allowing full and independent control of each of the outputs.

7.2 Functional Block Diagram

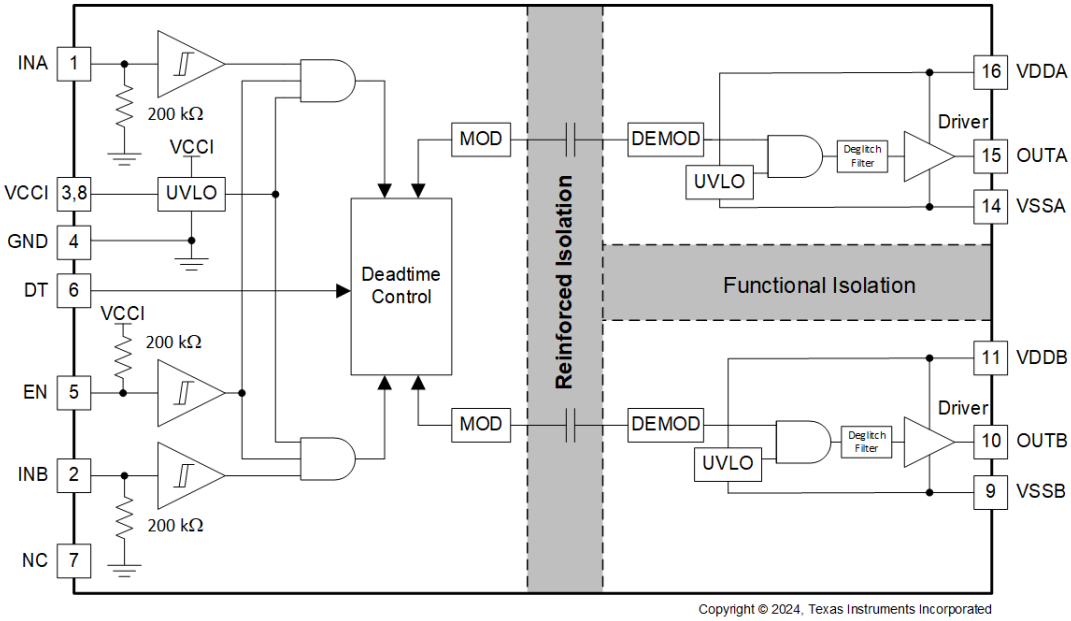

7.3 Feature Description

7.3.1 VDD, VCCI, and Under Voltage Lock Out (UVLO)

The UCC21530 has an internal under voltage lock out (UVLO) protection feature on the supply circuit blocks between the VDD and VSS pins for both outputs. When the VDD bias voltage is lower than V_{VDD_ON} at device start-up or lower than V_{VDD_OFF} after start-up, the VDD UVLO feature holds the effected output low, regardless of the status of the input pins (INA and INB).

When the output stages of the driver are in an unbiased or UVLO condition, the driver outputs are held low by an active clamp circuit that limits the voltage rise on the driver outputs (Illustrated in Figure 7-1). In this condition, the upper PMOS is resistively held off by $R_{Hi\text{-}Z}$ while the lower NMOS gate is tied to the driver output through R_{CLAMP}. In this configuration, the output is effectively clamped to the threshold voltage of the lower NMOS device, typically less than 1.5V, when no bias power is available.

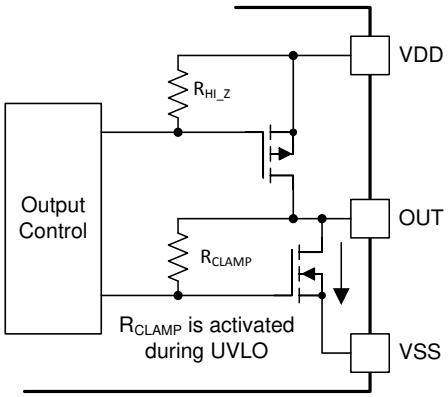

Figure 7-1. Simplified Representation of Active Pull Down Feature

The VDD UVLO protection has a hysteresis feature (V_{VDD_HYS}). This hysteresis prevents chatter when there is ground noise from the power supply. Also this allows the device to accept small drops in bias voltage, which is bound to happen when the device starts switching and operating current consumption increases suddenly.

The input side of the UCC21530 also has an internal under voltage lock out (UVLO) protection feature. The device isn't active unless the voltage, VCCI, is going to exceed V_{VCCI_ON} on start up. The signal will cease to be delivered once the pin receives a voltage less than V_{VCCI_OFF}. In the same way as the VDD UVLO, there is hysteresis (V_{VCCI_HYS}) to ensure stable operation.

UCC21530 can withstand an absolute maximum of 30 V for VDD, and 20 V for VCCI.

Table 7-1. UCC21530 VCCI UVLO Feature Logic

CONDITION	INPUTS		OUTPUTS	
	INA	INB	OUTA	OUTB
VCCI-GND < V_{VCCI_ON} during device start up	H	L	L	L
VCCI-GND < V_{VCCI_ON} during device start up	L	H	L	L
VCCI-GND < V_{VCCI_ON} during device start up	H	H	L	L
VCCI-GND < V_{VCCI_ON} during device start up	L	L	L	L
VCCI-GND < V_{VCCI_OFF} after device start up	H	L	L	L
VCCI-GND < V_{VCCI_OFF} after device start up	L	H	L	L
VCCI-GND < V_{VCCI_OFF} after device start up	H	H	L	L
VCCI-GND < V_{VCCI_OFF} after device start up	L	L	L	L

Table 7-2. UCC21530 VDD UVLO Feature Logic

CONDITION	INPUT: INx	OUTPUT: OUTx
VDDx-VSSx < V_{VDD_ON} during device start up	L	L
VDDx-VSSx < V_{VDD_ON} during device start up	H	L

Copyright © 2024 Texas Instruments Incorporated

Table 7-2. UCC21530 VDD UVLO Feature Logic (continued)

CONDITION	INPUT: INx	OUTPUT: OUTx
VDDx-VSSx < V_{VDD_OFF} after device start up	L	L
VDDx-VSSx < V_{VDD_OFF} after device start up	H	L

7.3.2 Input and Output Logic Table

Table 7-3. INPUT/OUTPUT Logic Table

Assume VCCI, VDDA, VDDB are powered up. See Section 7.3.1 for more information on UVLO operation modes. (1)

INPUTS		EN	OUTPUTS		NOTE
INA	INB		OUTA	OUTB	
L	L	H	L	L	If Dead Time function is used, output transitions occur after the dead time expires. See Section 7.4.2
L	H	H	L	H	
H	L	H	H	L	
H	H	H	L	L	DT is left open or programmed with R_{DT}
H	H	H	H	H	DT pin pulled to VCCI
Left Open	Left Open	H	L	L	-
X	X	L or Left Open	L	L	Bypass using a ≥ 1-nF low ESR/ESL capacitor close to EN pin when connecting to a µC with distance

(1) "X" means L, H or left open.

7.3.3 Input Stage

The input signal pins (INA and INB) of UCC21530 are based on a TTL and CMOS compatible input-threshold logic that is totally isolated from the VDD supply voltage. The input pins are easy to drive with logic-level control signals (Such as those from 3.3-V micro-controllers), since UCC21530 has a typical high threshold ($V_{INA/BH}$) of 1.8 V and a typical low threshold of 1 V, which vary little with temperature (see Figure 5-22, Figure 5-23). A wide hysterisis (V_{INA/B_HYS}) of 0.8 V makes for good noise immunity and stable operation. If any of the inputs are ever left open, internal pull-down resistors force the pin low. These resistors are typically 200 kΩ (See Section 7.2). However, it is still recommended to ground an input if it is not being used.

Since the input side of UCC21530 is isolated from the output drivers, the input signal amplitude can be larger or smaller than VDD, provided that it doesn't exceed the recommended limit. This allows greater flexibility when integrating with control signal sources, and allows the user to choose the most efficient VDD for their chosen gate. That said, the amplitude of any signal applied to INA or INB must *never* be at a voltage higher than VCCI.

Copyright © 2024 Texas Instruments Incorporated

7.3.4 Output Stage

The UCC21530's output stages features a pull-up structure which delivers the highest peak-source current when it is most needed, during the Miller plateau region of the power-switch turn on transition (when the power switch drain or collector voltage experiences dV/dt). The output stage pull-up structure features a P-channel MOSFET and an additional *Pull-Up* N-channel MOSFET in parallel. The function of the N-channel MOSFET is to provide a brief boost in the peak-sourcing current, enabling fast turn on. This is accomplished by briefly turning on the N-channel MOSFET during a narrow instant when the output is changing states from low to high. The on-resistance of this N-channel MOSFET (R_{NMOS}) is approximately 1.47 Ω when activated.

The R_{OH} parameter is a DC measurement and it is representative of the on-resistance of the P-channel device only. This is because the *Pull-Up* N-channel device is held in the off state in DC condition and is turned on only for a brief instant when the output is changing states from low to high. Therefore the effective resistance of the UCC21530 pull-up stage during this brief turn-on phase is much lower than what is represented by the R_{OH} parameter.

The pull-down structure in UCC21530 is simply composed of an N-channel MOSFET. The R_{OL} parameter, which is also a DC measurement, is representative of the impedance of the pull-down state in the device. Both outputs of the UCC21530 are capable of delivering 4-A peak source and 6-A peak sink current pulses. The output voltage swings between VDD and VSS provides rail-to-rail operation, thanks to the MOS-out stage which delivers very low drop-out.

To ensure robust and reliable operation of gate drivers, pay special attention to the minimum pulse width. The minimum pulse width shown in the electrical characteristics table describes the minimum input pulse that would be passed to the output in an unloaded driver. This is dictated by the deglitch filter present in the driver IC. An input ON or OFF pulse width longer than the maximum specification is needed to guarantee an output state change and avoid potential shoot-through. With a loaded driver, extra precaution must be taken to ensure robust operation of the system. During gate switching, if the output state changes before the driver completes each transition, a non-zero current switching event occurs. Combined with layout parasitics, non-zero current switching can cause internal rail overshoot and EOS damage of the gate driver. Thus, a minimum output width is needed for reliable system operation. This minimum output pulse width is dependent on several factors: gate capacitance, VDD supply voltage, gate resistance, and PCB layout parasitics. The minimum pulse width for robust operation might be magnitudes larger than the minimum pulse width shown in the electrical characteristics table. System-level study should be carried out to determine the minimum output pulse width required for each system.

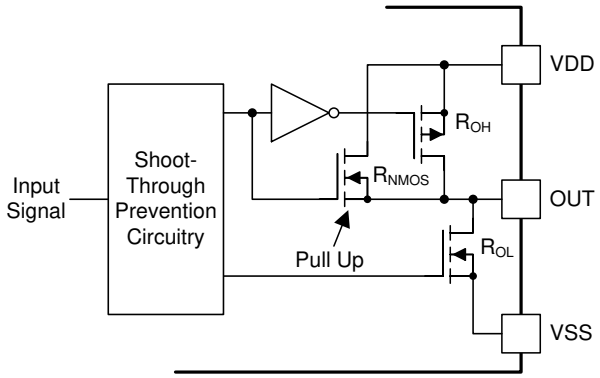

Figure 7-2. Output Stage

Copyright © 2024 Texas Instruments Incorporated

7.3.5 Diode Structure in UCC21530-Q1

Figure 7-3 illustrates the multiple diodes involved in the ESD protection components of the UCC21530. This provides a pictorial representation of the absolute maximum rating for the device.

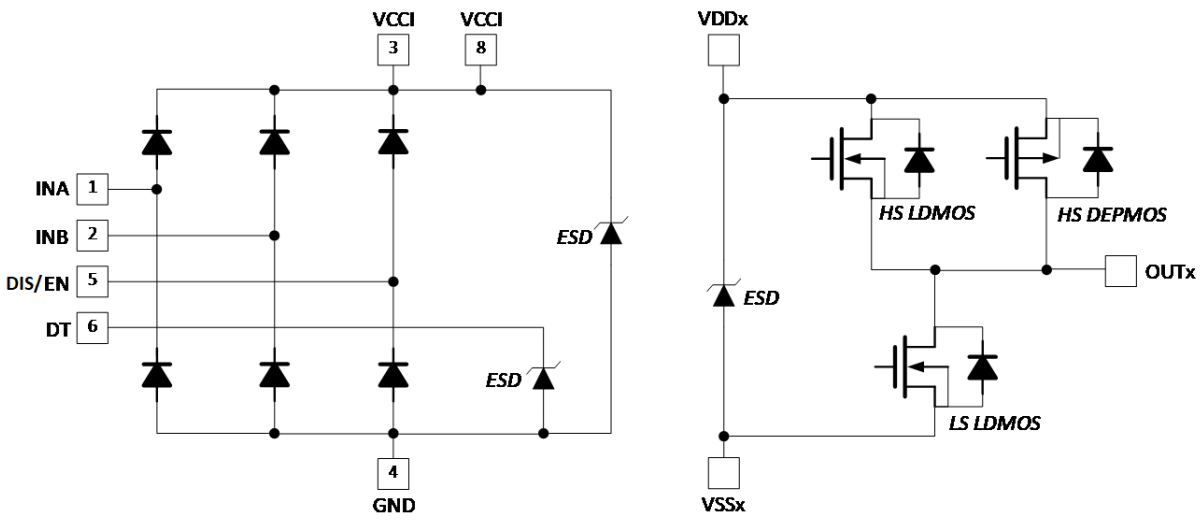

Figure 7-3. ESD Structure

7.4 Device Functional Modes

7.4.1 Enable Pin

Setting the EN pin low, that is $V_{EN} \leq 0.8V$, shuts down both outputs simultaneously. Pull the EN pin high (or left open), that is $V_{EN} \geq 2.0V$, allows UCC21530 to operate normally. The EN pin is quite responsive, as far as propagation delay and other switching parameters are concerned, the delay between EN are OUTA and OUTB is about 40ns. The EN pin is only functional (and necessary) when VCCI stays above the UVLO threshold. It is highly recommended to tie EN to VCCI directly to achieve better noise immunity.

7.4.2 Programmable Dead Time (DT) Pin

UCC21530 allows the user to adjust dead time (DT) in the following ways:

7.4.2.1 DT Pin Tied to VCC

Outputs completely match inputs, so no minimum dead time is asserted. This allows outputs to overlap. It is recommended to connect this pin to VCCI directly if it is not used to achieve better noise immunity.

7.4.2.2 DT Pin Connected to a Programming Resistor between DT and GND Pins

Program t_{DT} by placing a resistor, R_{DT}, between the DT pin and GND. TI recommends bypassing this pin with a ceramic capacitor ≤1nF close to DT pin to achieve better noise immunity. The appropriate R_{DT} value can be determined from:

$$t_{DT} \approx 10 \times R_{DT} \tag{1}$$

where

- t_{DT} is the programmed dead time, in nanoseconds.
- R_{DT} is the value of resistance between DT pin and GND, in kilo-ohms.

The steady state voltage at the DT pin is about 0.8 V. R_{DT} programs a small current at this pin, which sets the dead time. As the value of R_{DT} increases, the current sourced by the DT pin decreases. The DT pin current will be less than 10 µA when R_{DT} = 100 kΩ. For larger values of R_{DT}, TI recommends placing R_{DT} and a ceramic

capacitor ≤1nF as close to the DT pin as possible to achieve greater noise immunity and better dead time matching between both channels.

The falling edge of an input signal initiates the programmed dead time for the other signal. The programmed dead time is the minimum enforced duration in which both outputs are held low by the driver. The outputs may also be held low for a duration greater than the programmed dead time, if the INA and INB signals include a dead time duration greater than the programmed minimum. If both inputs are high simultaneously, both outputs will immediately be set low. This feature is used to prevent shoot-through in half-bridge applications, and it does not affect the programmed dead time setting for normal operation. Various driver dead time logic operating conditions are illustrated and explained in Figure 7-4.

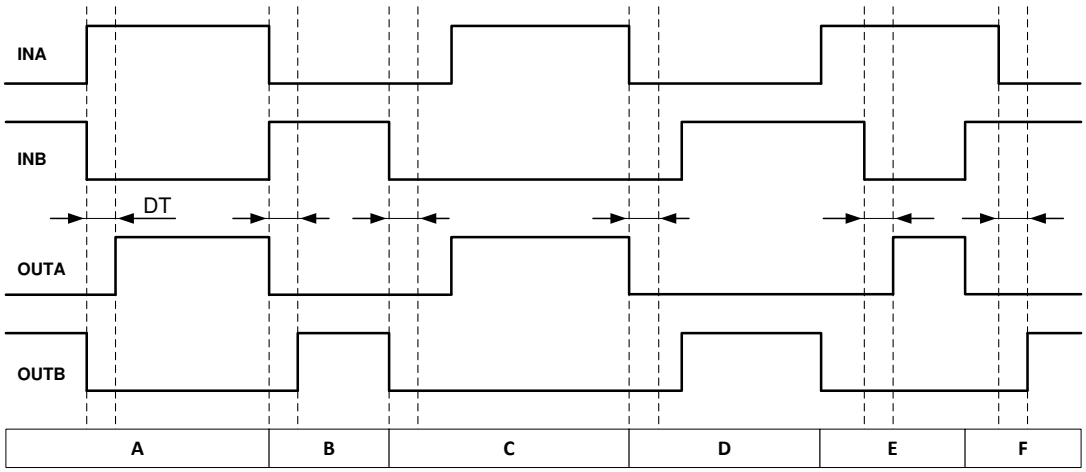

Figure 7-4. Input and Output Logic Relationship With Input Signals

Condition A: INB goes low, INA goes high. INB sets OUTB low immediately and assigns the programmed dead time to OUTA. OUTA is allowed to go high after the programmed dead time.

Condition B: INB goes high, INA goes low. Now INA sets OUTA low immediately and assigns the programmed dead time to OUTB. OUTB is allowed to go high after the programmed dead time.

Condition C: INB goes low, INA is still low. INB sets OUTB low immediately and assigns the programmed dead time for OUTA. In this case, the input signal's *own* dead time is longer than the programmed dead time. Thus, when INA goes high, it immediately sets OUTA high.

Condition D: INA goes low, INB is still low. INA sets OUTA low immediately and assigns the programmed dead time to OUTB. INB's *own* dead time is longer than the programmed dead time. Thus, when INB goes high, it immediately sets OUTB high.

Condition E: INA goes high, while INB and OUTB are still high. To avoid overshoot, INA immediately pulls OUTB low and keeps OUTA low. After some time OUTB goes low and assigns the programmed dead time to OUTA. OUTB is already low. After the programmed dead time, OUTA is allowed to go high.

Condition F: INB goes high, while INA and OUTA are still high. To avoid overshoot, INB immediately pulls OUTA low and keeps OUTB low. After some time OUTA goes low and assigns the programmed dead time to OUTB. OUTA is already low. After the programmed dead time, OUTB is allowed to go high.

Copyright © 2024 Texas Instruments Incorporated

8 Application and Implementation

Note

Information in the following applications sections is not part of the TI component specification, and TI does not warrant its accuracy or completeness. TI's customers are responsible for determining suitability of components for their purposes, as well as validating and testing their design implementation to confirm system functionality.

8.1 Application Information

The UCC21530 effectively combines both isolation and buffer-drive functions. The flexible, universal capability of the UCC21530 (with up to 18-V VCCI and 25-V VDDA/VDDB) allows the device to be used as a low-side, high-side, high-side and low-side or half-bridge driver for MOSFETs, IGBTs or SiC MOSFETs. With integrated components, advanced protection features (UVLO, dead time, and enable) and optimized switching performance; the UCC21530 enables designers to build smaller, more robust designs for enterprise, telecom, automotive, and industrial applications with a faster time to market.

8.2 Typical Application

The circuit in Figure 8-1 shows a reference design with UCC21530 driving a typical half-bridge configuration which could be used in several popular power converter topologies such as synchronous buck, synchronous boost, half-bridge/full bridge isolated topologies, and 3-phase motor drive applications. This circuit uses two supplies (or single-input-double-output power supply). Power supply V_{A+} determines the positive drive output voltage and V_{A-} determines the negative turn-off voltage. The configuration for channel B is the same as channel A.

When parasitic inductances are introduced by non-ideal PCB layout and long package leads (e.g. TO-220 and TO-247 type packages), there could be ringing in the gate-source drive voltage of the power transistor during high di/dt and dv/dt switching. If the ringing is over the threshold voltage, there is the risk of unintended turn-on and even shoot-through. Applying a negative bias on the gate drive is a popular way to keep such ringing below the threshold. This solution has two separate power supplies for each driver channel, so it provides flexibility when setting the positive and negative rail voltages.

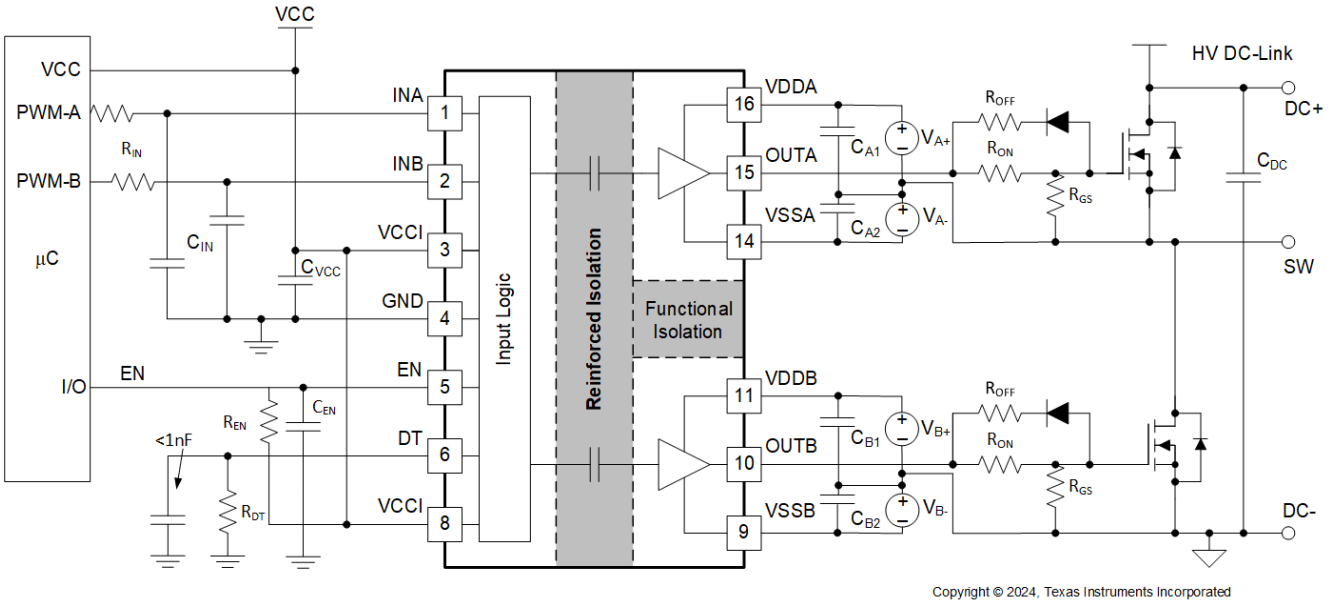

Figure 8-1. Typical Application Schematic with Dual Power Supplies

8.2.1 Design Requirements

Table 8-1 lists reference design parameters for the example application: UCC21530 driving 1000-V SiC-MOSFETs in a high side-low side configuration.

Table 8-1. UCC21530 Design Requirements

PARAMETER	VALUE	UNITS
Power transistor	C3M0065100K	–
VCC	5.0	V
VDD	15	V
VSS	–4	V
R_{ON}	2.2	Ω
R_{OFF}	0	Ω
Input signal amplitude	3.3	V
Switching frequency (f_s)	100	kHz
DC link voltage	600	V

8.2.2 Detailed Design Procedure

8.2.2.1 Designing INA/INB Input Filter

It is recommended that users avoid shaping the signals to the gate driver in an attempt to slow down (or delay) the signal at the output. However, a small input R_{IN}-C_{IN} filter can be used to filter out the ringing introduced by non-ideal layout or long PCB traces.

Such a filter should use an R_{IN} in the range of 0 Ω to 100 Ω and a C_{IN} between 10 pF and 100 pF. In the example, an R_{IN} = 51 Ω and a C_{IN} = 33 pF are selected, with a corner frequency of approximately 100 MHz.

When selecting these components, it is important to pay attention to the trade-off between good noise immunity and propagation delay.

8.2.2.2 Select Dead Time Resistor and Capacitor

From Equation 1, a 10-kΩ resistor is selected to set the dead time to 100 ns. A ≤1-nF capacitor is placed in parallel close to the DT pin to improve noise immunity.

8.2.2.3 Gate Driver Output Resistor

The external gate driver resistors, R_{ON}/R_{OFF}, are used to:

1. Limit ringing caused by parasitic inductances/capacitances.
2. Limit ringing caused by high voltage/current switching dv/dt, di/dt, and body-diode reverse recovery.
3. Fine-tune gate drive strength, i.e. peak sink and source current to optimize the switching loss.
4. Reduce electromagnetic interference (EMI).

As mentioned in Section 7.3.4, the UCC21530 has a pull-up structure with a P-channel MOSFET and an additional *pull-up* N-channel MOSFET in parallel. The combined peak source current is 4 A. Therefore, the peak source current can be predicted with:

$$I_{O+} = \min\left(4A, \frac{V_{DD} - V_{SS}}{R_{NMOS} \,||\, R_{OH} + R_{ON} + R_{GFET_Int}}\right) \tag{2}$$

where

- R_{ON}: External turn-on resistance,R_{ON}=2.2 Ω in this example;.
- R_{GFET_INT}: Power transistor internal gate resistance, found in the power transistor datasheet.
- I_{O+} = Peak source current – The minimum value between 4 A, the gate driver peak source current, and the calculated value based on the gate drive loop resistance.

Copyright © 2024 Texas Instruments Incorporated

In this example:

$$I_{O+} = \frac{V_{DD} - V_{SS}}{R_{NMOS} \,||\, R_{OH} + R_{ON} + R_{GFET_Int}} = \frac{15V - (-4V)}{1.47\Omega \,||\, 5\Omega + 2.2\Omega + 4.7\Omega} \approx 2.4A \tag{3}$$

Therefore, the driver peak source current is 2.4 A for each channel. Similarly, the peak sink current can be calculated with:

$$I_{O-} = \min\left(6A, \frac{V_{DD} - V_{SS} - V_{GDF}}{R_{OL} + R_{OFF} \,||\, R_{ON} + R_{GFET_Int}}\right) \tag{4}$$

where

- R_{OFF}: External turn-off resistance, R_{OFF}=0 in this example;
- V_{GDF}: The anti-parallel diode forward voltage drop which is in series with R_{OFF}. The diode in this example is an MSS1P4.
- I_{O-}: Peak sink current – the minimum value between 6 A, the gate driver peak sink current, and the calculated value based on the gate drive loop resistance.

In this example,

$$I_{O-} = \frac{V_{DD} - V_{SS} - V_{GDF}}{R_{OL} + R_{OFF} \,||\, R_{ON} + R_{GFET_Int}} = \frac{15V - (-4V) - 0.75V}{0.55\Omega + 0\Omega + 4.7\Omega} \approx 3.5A \tag{5}$$

Therefore, the driver peak sink current is 3.5 A for each channel.

Importantly, the estimated peak current is also influenced by PCB layout and load capacitance. Parasitic inductance in the gate driver loop can slow down the peak gate drive current and introduce overshoot and undershoot. Therefore, it is strongly recommended that the gate driver loop should be minimized. On the other hand, the peak source/sink current is dominated by loop parasitics when the load capacitance (C_{ISS}) of the power transistor is very small (typically less than 1 nF), because the rising and falling time is too small and close to the parasitic ringing period.

8.2.2.4 Estimate Gate Driver Power Loss

The total loss, P_G, in the gate driver subsystem includes the power losses of the UCC21530 (P_{GD}) and the power losses in the peripheral circuitry, such as the external gate drive resistor. Bootstrap diode loss is not included in P_G and not discussed in this section.

P_{GD} is the key power loss which determines the thermal safety-related limits of the UCC21530, and it can be estimated by calculating losses from several components.

The first component is the static power loss, P_{GDQ}, which includes quiescent power loss on the driver as well as driver self-power consumption when operating with a certain switching frequency. P_{GDQ} is measured on the bench with no load connected to OUTA and OUTB at a given VCCI, VDDA/VDDB, switching frequency and ambient temperature. Figure 5-4 shows the per output channel current consumption vs. operating frequency with no load. In this example, V_{VCCI} = 5 V and V_{VDD}-V_{VSS} = 19 V. The current on each power supply, with INA/INB switching from 0 V to 3.3 V at 100 kHz is measured to be I_{VCCI} ≈ 2.5 mA, and I_{VDDA} = I_{VDDB} ≈ 1.5 mA. Therefore, the P_{GDQ} can be calculated with

$$P_{GDQ} = V_{VCCI} \times I_{VCCI} + (V_{VDDA} - V_{VSSA}) \times I_{DDA} + (V_{VDDB} - V_{VSSB}) \times I_{DDB} \approx 70mW \tag{6}$$

The second component is switching operation loss, P_{GDO}, with a given load capacitance which the driver charges and discharges the load during each switching cycle. Total dynamic loss due to load switching, P_{GSW}, can be estimated with

$$P_{GSW} = 2 \times (V_{DD} - V_{SS}) \times Q_G \times f_{SW} \tag{7}$$

where

- Q_G is the gate charge of the power transistor.

If a split rail is used to turn on and turn off, then VDD is going to be equal to difference between the positive rail to the negative rail.

So, for this example application:

$$P_{GSW} = 2 \times 19V \times 35nC \times 100kHz = 133mW \tag{8}$$

Q_G represents the total gate charge of the power transistor switching 600 V at 20 A, and is subject to change with different testing conditions. The UCC21530 gate driver loss on the output stage, P_{GDO}, is part of P_{GSW}. P_{GDO} will be equal to P_{GSW} if the external gate driver resistances are zero, and all the gate driver loss is dissipated inside the UCC21530. If there are external turn-on and turn-off resistances, the total loss will be distributed between the gate driver pull-up/down resistances and external gate resistances. Importantly, the pull-up/down resistance is a linear and fixed resistance if the source/sink current is not saturated to 4 A/6 A, however, it will be non-linear if the source/sink current is saturated. Therefore, P_{GDO} is different in these two scenarios.

Case 1 - Linear Pull-Up/Down Resistor:

$$P_{GDO} = P_{GSW} \times \left(\frac{R_{OH} \parallel R_{NMOS}}{R_{OH} \parallel R_{NMOS} + R_{ON} + R_{GFET_Int}} + \frac{R_{OL}}{R_{OL} + R_{OFF} \parallel R_{ON} + R_{GFET_Int}} \right) \tag{9}$$

In this design example, all the predicted source/sink currents are less than 4 A/6 A, therefore, the UCC21530 gate driver loss can be estimated with:

$$P_{GDO} = 133mW \times \left(\frac{5\Omega \parallel 1.47\Omega}{5\Omega \parallel 1.47\Omega + 2.2\Omega + 4.7\Omega} + \frac{0.55\Omega}{0.55\Omega + 0\Omega + 4.7\Omega} \right) \approx 33mW \tag{10}$$

Case 2 - Nonlinear Pull-Up/Down Resistor:

$$P_{GDO} = 2 \times f_{SW} \times \left[4A \times \int_0^{T_{R_Sys}} \left(V_{DD} - V_{OUTA/B}(t)\right) dt + 6A \times \int_0^{T_{F_Sys}} (V_{OUTA/B}(t) - V_{SS}) dt \right] \tag{11}$$

where

- $V_{OUTA/B}(t)$ is the gate driver OUTA and OUTB pin voltage during the turn on and off transient, and it can be simplified that a constant current source (4 A at turn-on and 6 A at turn-off) is charging/discharging a load capacitor. Then, the $V_{OUTA/B}(t)$ waveform will be linear and the T_{R_Sys} and T_{F_Sys} can be easily predicted.

For some scenarios, if only one of the pull-up or pull-down circuits is saturated and another one is not, the P_{GDO} will be a combination of Case 1 and Case 2, and the equations can be easily identified for the pull-up

Copyright © 2024 Texas Instruments Incorporated

and pull-down based on the above discussion. Therefore, total gate driver loss dissipated in the gate driver UCC21530, P_{GD}, is:

$$P_{GD} = P_{GDQ} + P_{GDO} \tag{12}$$

which is equal to 103 mW in the design example.

8.2.2.5 Estimating Junction Temperature

The junction temperature of the UCC21530 can be estimated with:

$$T_J = T_C + \Psi_{JT} \times P_{GD} \tag{13}$$

where

- T_J is the junction temperature.
- T_C is the UCC21530 case-top temperature measured with a thermocouple or some other instrument.
- ψ_{JT} is the junction-to-top characterization parameter from the Thermal Information table.

Using the junction-to-top characterization parameter (Ψ_{JT}) instead of the junction-to-case thermal resistance ($R_{\Theta JC}$) can greatly improve the accuracy of the junction temperature estimation. The majority of the thermal energy of most ICs is released into the PCB through the package leads, whereas only a small percentage of the total energy is released through the top of the case (where thermocouple measurements are usually conducted). $R_{\Theta JC}$ can only be used effectively when most of the thermal energy is released through the case, such as with metal packages or when a heatsink is applied to an IC package. In all other cases, use of $R_{\Theta JC}$ will inaccurately estimate the true junction temperature. Ψ_{JT} is experimentally derived by assuming that the amount of energy leaving through the top of the IC will be similar in both the testing environment and the application environment. As long as the recommended layout guidelines are observed, junction temperature estimates can be made accurately to within a few degrees Celsius. For more information, see the Section 10.1 and *Semiconductor and IC Package Thermal Metrics Application Report*.

8.2.2.6 Selecting VCCI, VDDA/B Capacitor

Bypass capacitors for VCCI, VDDA, and VDDB are essential for achieving reliable performance. It is recommended that one choose low ESR and low ESL surface-mount multi-layer ceramic capacitors (MLCC) with sufficient voltage ratings, temperature coefficients and capacitance tolerances. Importantly, DC bias on an MLCC will impact the actual capacitance value. For example, a 25-V, 1-µF X7R capacitor is measured to be only 500 nF when a DC bias of 15 V_{DC} is applied.

8.2.2.6.1 Selecting a VCCI Capacitor

A bypass capacitor connected to VCCI supports the transient current needed for the primary logic and the total current consumption, which is only a few mA. Therefore, a 50-V MLCC with over 100 nF is recommended for this application. If the bias power supply output is a relatively long distance from the VCCI pin, a tantalum or electrolytic capacitor, with a value over 1 µF, should be placed in parallel with the MLCC.

Copyright © 2024 Texas Instruments Incorporated

8.2.2.7 Other Application Example Circuits

When parasitic inductances are introduced by non-ideal PCB layout and long package leads (e.g. TO-220 and TO-247 type packages), there could be ringing in the gate-source drive voltage of the power transistor during high di/dt and dv/dt switching. If the ringing is over the threshold voltage, there is the risk of unintended turn-on and even shoot-through. Applying a negative bias on the gate drive is a popular way to keep such ringing below the threshold. Below are a few examples of implementing negative gate drive bias.

Instead of using two separate power for generating positive and negative drive voltage Figure 8-2 shows the example with negative bias turn-off on the channel-A driver using a Zener diode on the isolated power supply output stage. The negative bias is set by the Zener diode voltage. If the isolated power supply, V_A, is equal to 19 V, the turn-off voltage will be –3.9 V and turn-on voltage will be 19 V –– 3.9 V ≈ 15 V. The channel-B driver circuit is the same as channel-A, therefore, this configuration needs only one power supply for each driver channel, and there will be steady state power consumption from R_Z.

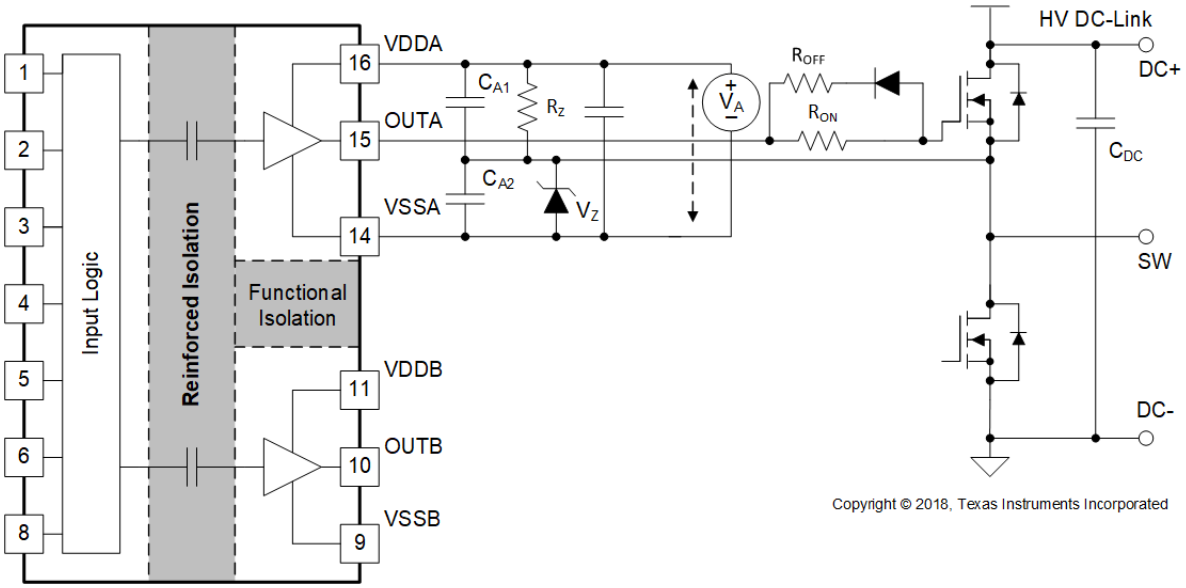

Figure 8-2. Negative Bias with Zener Diode on Iso-Bias Power Supply Output

Copyright © 2024 Texas Instruments Incorporated

Figure 8-3 shows another example which uses bootstrap to provide power for the channel A, this solution doesn't have negative rail voltage, it is only suitable for circuits with less ringing or the power device has high threshold voltage.

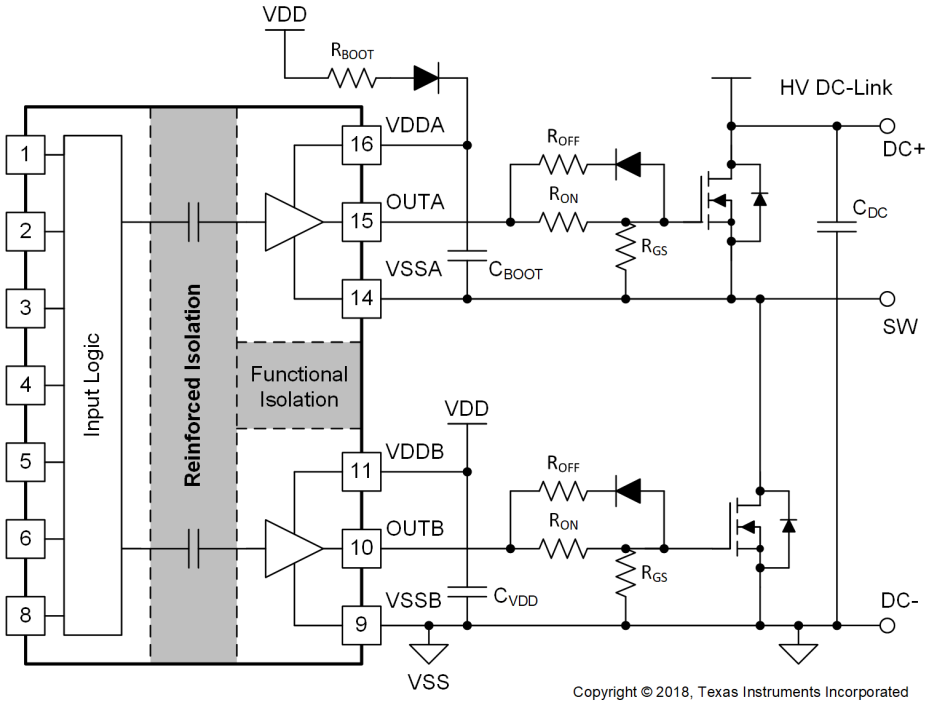

Figure 8-3. Bootstrap Power Supply for the High Side Device

The last example, shown in Figure 8-4, is a single power supply configuration and generates negative bias through a Zener diode in the gate drive loop. The benefit of this solution is that it only uses one power supply and the bootstrap power supply can be used for the high side drive. This design requires the least cost and design effort among the three solutions. However, this solution has limitations:

1. The negative gate drive bias is not only determined by the Zener diode, but also by the duty cycle, which means the negative bias voltage will change when the duty cycle changes. Therefore, converters with a fixed duty cycle (~50%) such as variable frequency resonant convertors or phase shift convertors which favor this solution.
2. The high side VDDA-VSSA must maintain enough voltage to stay in the recommended power supply range, which means the low side switch must turn-on or have free-wheeling current on the body (or anti-parallel) diode for a certain period during each switching cycle to refresh the bootstrap capacitor. Therefore, a 100% duty cycle for the high side is not possible unless there is a dedicated power supply for the high side, like in the other two example circuits.

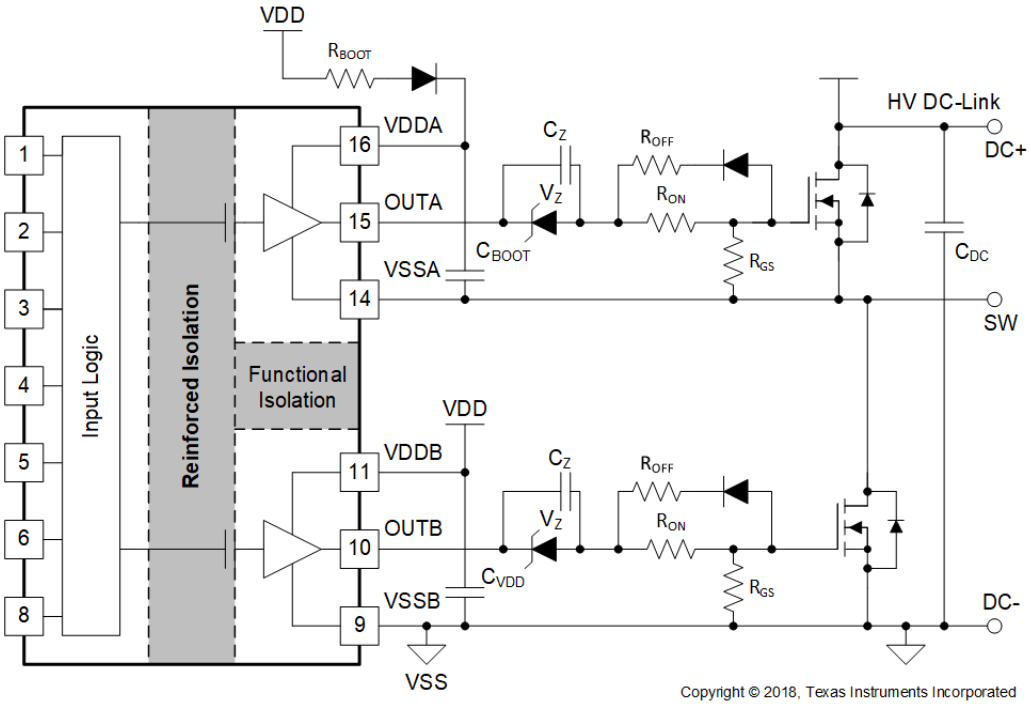

Figure 8-4. Negative Bias with Single Power Supply and Zener Diode in Gate Drive Path

Copyright © 2024 Texas Instruments Incorporated

8.2.3 Application Curves

Figure 8-5 shows a multiple pulses bench test circuit which uses L1 as the inductor load, and a group of control pulses are generated to evaluate driver and SiC MOSFET switching transient under different load conditions. The test conditions are: $V_{DC\text{-}Link}$ = 600 V, VCC = 5 V, VDD = 15 V, VSS = –4 V, f_{SW} = 500 kHz, R_{ON} = 5.1 Ω, R_{OFF} = 1.0 Ω. Figure 8-6 shows the turn on and turn off waveforms at around 20 A current

Channel 1 (Yellow): Gate-source voltage signal on the low side MOSFET.

Channel 2 (Blue): Gate-source voltage signal on the high side MOSFET.

Channel 3 (Pink): Drain-source voltage signal for the low side MOSFET.

Channel 4 (Green): Drain-source current signal for the low side MOSFET.

In Figure 8-6, the gate drive signals on the high and low power transistor have a 100-ns dead time, and both signals are measured with >= 500 MHz bandwidth probes.

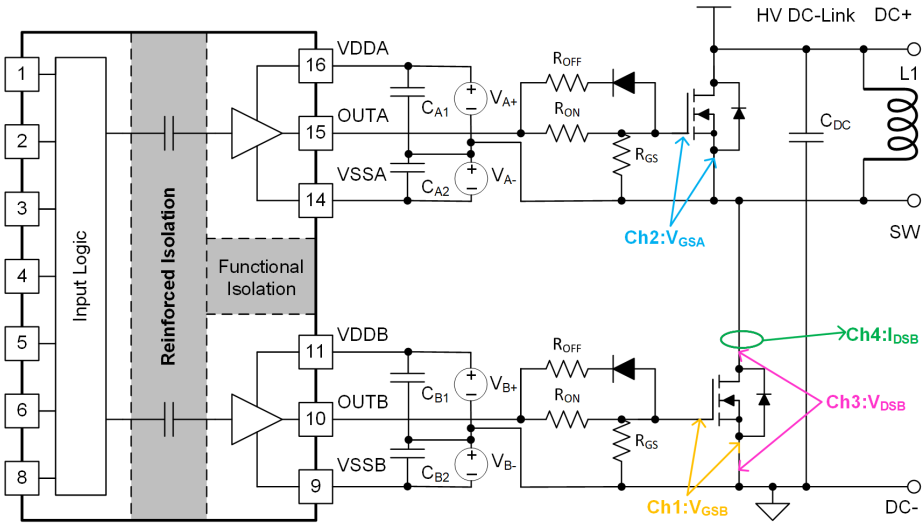

Figure 8-5. Bench Test Circuit with SiC MOSFET Switching

Figure 8-6. SiC MOSFET Switching Waveforms

9 Power Supply Recommendations

The recommended input supply voltage (VCCI) for UCC21530 is between 3 V and 18 V. The output bias supply voltage (VDDA/VDDB) range depends on which version of UCC21530 one is using. The lower end of this bias supply range is governed by the internal under voltage lockout (UVLO) protection feature of each device. One mustn't let VDD or VCCI fall below their respective UVLO thresholds (For more information on UVLO see Section 7.3.1). The upper end of the VDDA/VDDB range depends on the maximum gate voltage of the power device being driven by UCC21530. All versions of UCC21530 have a recommended maximum VDDA/VDDB of 25 V.

Place a local bypass capacitor between the VDD and VSS pins. Position this capacitor as close to the device as possible. Use a low ESR, ceramic surface mount capacitor. Place two such capacitors: one with a value of between 220 nF and 10 µF for device biasing, and an additional 100-nF capacitor in parallel for high frequency filtering.

Similarly, place a bypass capacitor between the VCCI and GND pins. Given the small amount of current drawn by the logic circuitry within the input side of UCC21530, this bypass capacitor has a minimum recommended value of 100 nF.

Copyright © 2024 Texas Instruments Incorporated

10 Layout

10.1 Layout Guidelines

Consider these PCB layout guidelines for in order to achieve optimum performance for the UCC21530.

10.1.1 Component Placement Considerations

- Low-ESR and low-ESL capacitors must be connected close to the device between the VCCI and GND pins and between the VDD and VSS pins to support high peak currents when turning on the external power transistor.
- To avoid large negative transients on the switch node VSSA (HS) pin in bridge configurations, the parasitic inductances between the source of the top transistor and the source of the bottom transistor must be minimized.
- To improve noise immunity when driving the EN pin from a distant micro-controller, TI recommends adding a small bypass capacitor, ≥ 1 nF, between the EN pin and GND.
- If the dead time feature is used, TI recommends placing the programming resistor R_{DT} and bypassing capacitor close to the DT pin of the UCC21530 to prevent noise from unintentionally coupling to the internal dead time circuit. The capacitor should be ≤1 nF.

10.1.2 Grounding Considerations

- It is essential to confine the high peak currents that charge and discharge the transistor gates to a minimal physical area. This will decrease the loop inductance and minimize noise on the gate terminals of the transistors. The gate driver must be placed as close as possible to the transistors.
- Pay attention to high current path that includes the bootstrap capacitor, bootstrap diode, local VSSB-referenced bypass capacitor, and the low-side transistor body/anti-parallel diode. The bootstrap capacitor is recharged on a cycle-by-cycle basis through the bootstrap diode by the VDD bypass capacitor. This recharging occurs in a short time interval and involves a high peak current. Minimizing this loop length and area on the circuit board is important for ensuring reliable operation.

10.1.3 High-Voltage Considerations

- To ensure isolation performance between the primary and secondary side, avoid placing any PCB traces or copper below the driver device. A PCB cutout is recommended in order to prevent contamination that may compromise the isolation performance.
- For half-bridge or high-side/low-side configurations, maximize the clearance distance of the PCB layout between the high and low-side PCB traces.

10.1.4 Thermal Considerations

- A large amount of power may be dissipated by the UCC21530 if the driving voltage is high, the load is heavy, or the switching frequency is high (refer to Section 8.2.2.4 for more details). Proper PCB layout can help dissipate heat from the device to the PCB and minimize junction to board thermal impedance (θ_{JB}).
- Increasing the PCB copper connecting to VDDA, VDDB, VSSA and VSSB pins is recommended, with priority on maximizing the connection to VSSA and VSSB (see Figure 10-2 and Figure 10-3). However, high voltage PCB considerations mentioned above must be maintained.
- If there are multiple layers in the system, it is also recommended to connect the VDDA, VDDB, VSSA and VSSB pins to internal ground or power planes through multiple vias of adequate size. Ensure that no traces or copper from different high-voltage planes overlap.

Copyright © 2024 Texas Instruments Incorporated

10.2 Layout Example

Figure 10-1 shows a 2-layer PCB layout example with the signals and key components labeled.

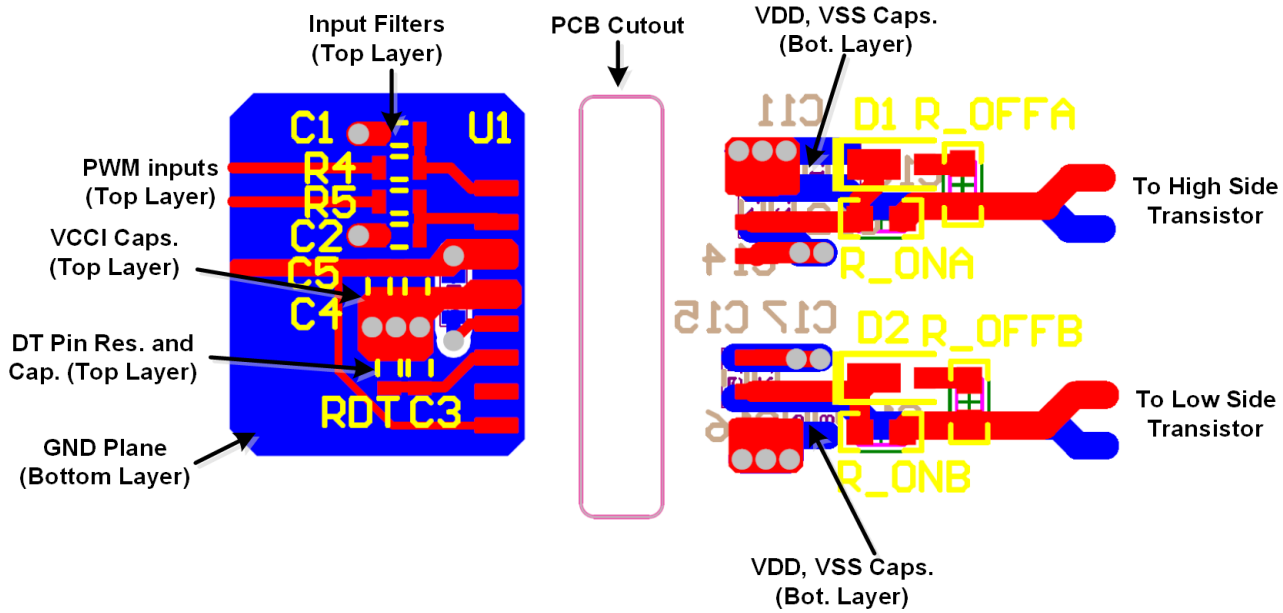

Figure 10-1. Layout Example

Figure 10-2 and Figure 10-3 shows top and bottom layer traces and copper.

Note

There are no PCB traces or copper between the primary and secondary side, which ensures isolation performance.

PCB traces between the high-side and low-side gate drivers in the output stage are increased to maximize the creepage distance for high-voltage operation, which will also minimize cross-talk between the switching node VSSA (SW), where high dv/dt may exist, and the low-side gate drive due to the parasitic capacitance coupling.

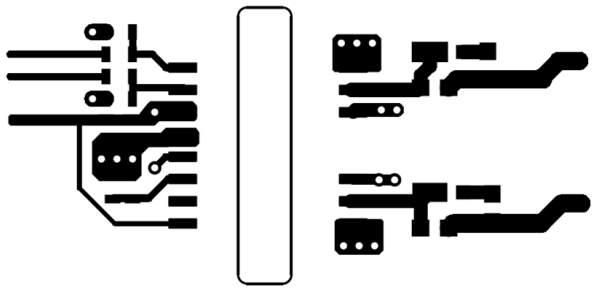

Figure 10-2. Top Layer Traces and Copper

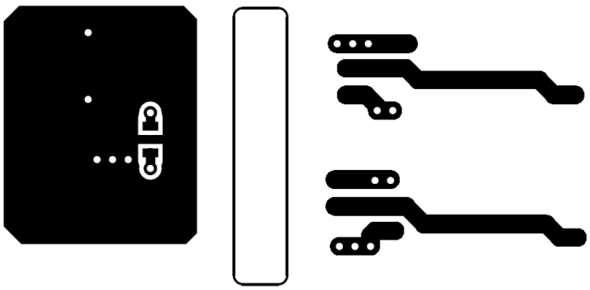

Figure 10-3. Bottom Layer Traces and Copper

Copyright © 2024 Texas Instruments Incorporated

Figure 10-4 and Figure 10-5 are 3D layout pictures with top view and bottom views.

Note

The location of the PCB cutout between the primary side and secondary sides, which ensures isolation performance.

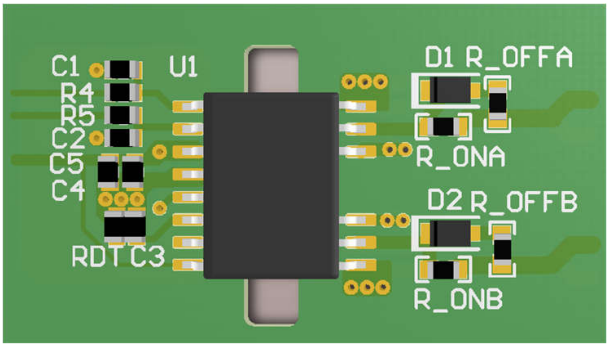

Figure 10-4. 3-D PCB Top View

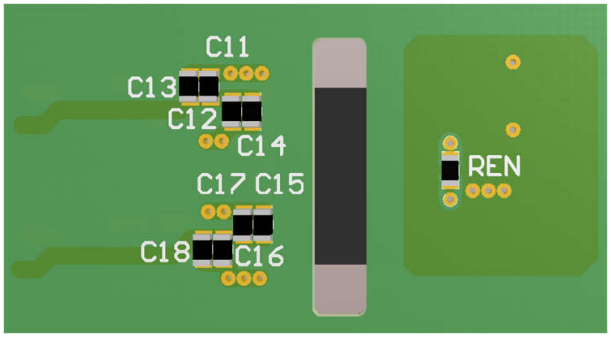

Figure 10-5. 3-D PCB Bottom View

11 Device and Documentation Support

11.1 Third-Party Products Disclaimer

TI'S PUBLICATION OF INFORMATION REGARDING THIRD-PARTY PRODUCTS OR SERVICES DOES NOT CONSTITUTE AN ENDORSEMENT REGARDING THE SUITABILITY OF SUCH PRODUCTS OR SERVICES OR A WARRANTY, REPRESENTATION OR ENDORSEMENT OF SUCH PRODUCTS OR SERVICES, EITHER ALONE OR IN COMBINATION WITH ANY TI PRODUCT OR SERVICE.

11.2 Documentation Support

11.2.1 Related Documentation

For related documentation see the following:

- Isolation Glossary

11.3 Receiving Notification of Documentation Updates

To receive notification of documentation updates, navigate to the device product folder on ti.com. Click on *Notifications* to register and receive a weekly digest of any product information that has changed. For change details, review the revision history included in any revised document.

11.4 Support Resources

TI E2E™ support forums are an engineer's go-to source for fast, verified answers and design help — straight from the experts. Search existing answers or ask your own question to get the quick design help you need.

Linked content is provided "AS IS" by the respective contributors. They do not constitute TI specifications and do not necessarily reflect TI's views; see TI's Terms of Use.

11.5 Trademarks

TI E2E™ is a trademark of Texas Instruments.
All trademarks are the property of their respective owners.

11.6 Glossary

TI Glossary	This glossary lists and explains terms, acronyms, and definitions.

12 Revision History

NOTE: Page numbers for previous revisions may differ from page numbers in the current version.

Changes from Revision C (November 2021) to Revision D (November 2024)	Page
• Changed typical propagation delay from 19ns to 33ns	1
• Changed minimum pulse width from 10ns to 20ns	1
• Deleted bullet on 5-ns maximum delay matching	1
• Changed CMTI from greater than 100V/ns to greater than 125V/ns	1
• Deleted bullet on >40 years isolation barrier	1
• Deleted bullet on rejecting shorter than 5ns input pulses	1
• Changed operating temperature to new range of junction temperature	1
• Updated certifications to latest standards. Removed CSA certification	1
• Deleted sentence on best-in-class propagation delay and PWD	1
• Changed minimum 100V/ns CMTI to 125V/ns	1
• Changed recommended DT pin condition and capacitor size on DT pin	3
• Changing all -0.5V minimum to -0.3V to keep consistent with newly released datasheets	4
• Changing all absolute maximum value from supply+0.5V to supply+0.3V to keep consistent with newly released datasheets	4
• Changed input signal voltage transient test condition to 50ns and absolute minimum to -5V	4
• Updated ESD spec from HBM = ±4000 and CDM = ±1500 to HBM = ±2000 and CDM = ±1000 to match ESD industry standards	4

Copyright © 2024 Texas Instruments Incorporated

- Changed 12V-UVLO recommended minimum VDDA/B voltage from 14.7V to 13.5V.... 4
- Deleted ambient temperature spec.... 4
- Changed Max junction temp to 150C.... 4
- Updated values from RθJA = 68.3°C/W, RθJC(top) = 31.7°C/W, RθJB = 27.6°C/W, ψJT = 17.7°C/W, ψJB = 27°C/W to RθJA = 74.1°C/W, RθJC(top) = 34.1°C/W, RθJB = 32.8°C/W, ψJT = 23.7°C/W, ψJB = 32.1°C/W.. 4
- Updated values from PD = 1810mW, PDI = 0.05W, PDA/PDB = 880mW to PD = 950mW, PDI = 50mW, PDA/PDB = 450mW. Changed test condition.... 5
- Updated values from DTI = 21mm, VIOSM = 8000VPK to DTI = 17mm, VIOSM = 10000VPK and added VIMP = 7692VPK.... 6
- Deleted safety related certifications section.... 6
- Updated values from IS = 58mA/35mA, PS = 50mW/880mW/880mW/1810mW to IS = 53mA/32mA, PS = 50mW/800mW/800mW/1650mW.... 7
- Changed VCCI quiescent current typical from 1.4mA to 1.5mA.... 7
- Updated IVDDA/IVDDB quiescent current spec Max value from 1.8mA to 2.5mA.... 7
- Updated IVCCI operating current Typ value from 2.0mA to 3.0mA and added Max value 3.5mA.... 7
- Changed IVDDA/IVDDB operating current Typ from 3mA to 2.5mA and added Max = 4.2mA.... 7
- Updated values from Rising threshold Min = 8V, Typ = 8.5V, Max = 9V to Min = 7.7V, Typ = 8.5V, Max = 8.9V.... 7
- Updated values from Falling threshold Min = 7.5V, Typ = 8V, Max = 8.5V to Min = 7.2V, Typ = 7.9V, Max = 8.4V.... 7
- Updated 8-V UVLO hysteresis typ = 0.5V to 0.6V.... 7
- Updated values from Rising threshold Min = 12.5V, Typ = 13.5V, Max = 14.5V to Min = 11.7V, Typ = 12.5V, Max = 13.3V.... 7
- Updated values from Rising threshold Min = 11.5V, Typ = 12.5V, Max = 13.5V to Min = 10.7V, Typ = 11.5V, Max = 12.3V.... 7
- Updated Input high threshold Min value from 1.6V to 1.2V.... 7
- Deleted enable high and low threshold.... 7
- Updated Deadtime parameter by moving to new Timing Requirements table and added more parameters.... 8
- Changed propagation delay TPDHL and TPDLH from Min = 14ns, Typ = 19ns, Max = 30ns to Min = 26ns, Typ = 33ns, Max = 45ns.... 8
- Changed propagation delay matching from Max = 5ns to Max = 6.5ns from TJ = -40C to -10C and Max = 5ns from TJ = -10C to 150C.... 8
- Deleted VCCI power up delay typical 40us and added max 50us.... 8
- Updated VDDA/VDDB power-up delay from Typ = 50us to Max=10us.... 8
- Updated CMTI from Min = 100V/ns to 125V/ns.... 8
- Updated insulation and thermal curves to match updated characteristics.... 9
- Updated typical characteristics figures.... 10
- Updated UVLO timing delays.... 15
- Added driver stage deglitch filter block in functional block diagram.... 17
- Changed ENABLE logic; ENABLE left open will pull outputs low.... 19
- Added paragraph on minimum pulse width to Output Stage section.... 20
- Updated ESD diode structure.... 21
- Changed recommended DT capacitor size from >2.2nF to ≤1nF.... 21
- Changed recommended DT capacitor size in schematic.... 23
- Changed DT capacitor size to ≤1nF.... 24
- Changed DT capacitor size recommendation from >=2.2nF to ≤1nF.... 33

Changes from Revision B (December 2019) to Revision C (November 2021) **Page**

- Updated the numbering format for tables, figures, and cross-references throughout the document.... 1
- Changed maximum pulse-width distortion value in *Features* section from "5 ns" to "6 ns".... 1

13 Mechanical, Packaging, and Orderable Information

The following pages include mechanical, packaging, and orderable information. This information is the most current data available for the designated devices. This data is subject to change without notice and revision of this document. For browser-based versions of this data sheet, refer to the left-hand navigation.

Copyright © 2024 Texas Instruments Incorporated

PACKAGING INFORMATION

Orderable part number	Status (1)	Material type (2)	Package | Pins	Package qty | Carrier	RoHS (3)	Lead finish/ Ball material (4)	MSL rating/ Peak reflow (5)	Op temp (°C)	Part marking (6)
PUCC21530DWK	Obsolete	Preproduction	SOIC (DWK) | 14	-	-	Call TI	Call TI	-40 to 125	
UCC21530DWK	Obsolete	Production	SOIC (DWK) | 14	-	-	Call TI	Call TI	-40 to 125	UCC21530
UCC21530DWKR	Active	Production	SOIC (DWK) | 14	2000 | LARGE T&R	Yes	NIPDAU	Level-2-260C-1 YEAR	-40 to 125	UCC21530
UCC21530DWKR.A	Active	Production	SOIC (DWK) | 14	2000 | LARGE T&R	Yes	NIPDAU	Level-2-260C-1 YEAR	-40 to 125	UCC21530
UCC21530DWKR.B	Active	Production	SOIC (DWK) | 14	2000 | LARGE T&R	Yes	NIPDAU	Level-2-260C-1 YEAR	-40 to 125	UCC21530

(1) **Status:** For more details on status, see our product life cycle.

(2) **Material type:** When designated, preproduction parts are prototypes/experimental devices, and are not yet approved or released for full production. Testing and final process, including without limitation quality assurance, reliability performance testing, and/or process qualification, may not yet be complete, and this item is subject to further changes or possible discontinuation. If available for ordering, purchases will be subject to an additional waiver at checkout, and are intended for early internal evaluation purposes only. These items are sold without warranties of any kind.

(3) **RoHS values:** Yes, No, RoHS Exempt. See the TI RoHS Statement for additional information and value definition.

(4) **Lead finish/Ball material:** Parts may have multiple material finish options. Finish options are separated by a vertical ruled line. Lead finish/Ball material values may wrap to two lines if the finish value exceeds the maximum column width.

(5) **MSL rating/Peak reflow:** The moisture sensitivity level ratings and peak solder (reflow) temperatures. In the event that a part has multiple moisture sensitivity ratings, only the lowest level per JEDEC standards is shown. Refer to the shipping label for the actual reflow temperature that will be used to mount the part to the printed circuit board.

(6) **Part marking:** There may be an additional marking, which relates to the logo, the lot trace code information, or the environmental category of the part.

Multiple part markings will be inside parentheses. Only one part marking contained in parentheses and separated by a "~" will appear on a part. If a line is indented then it is a continuation of the previous line and the two combined represent the entire part marking for that device.

Important Information and Disclaimer: The information provided on this page represents TI's knowledge and belief as of the date that it is provided. TI bases its knowledge and belief on information provided by third parties, and makes no representation or warranty as to the accuracy of such information. Efforts are underway to better integrate information from third parties. TI has taken and continues to take reasonable steps to provide representative and accurate information but may not have conducted destructive testing or chemical analysis on incoming materials and chemicals. TI and TI suppliers consider certain information to be proprietary, and thus CAS numbers and other limited information may not be available for release.

In no event shall TI's liability arising out of such information exceed the total purchase price of the TI part(s) at issue in this document sold by TI to Customer on an annual basis.

OTHER QUALIFIED VERSIONS OF UCC21530 :

- Automotive : UCC21530-Q1

NOTE: Qualified Version Definitions:

- Automotive - Q100 devices qualified for high-reliability automotive applications targeting zero defects

TAPE AND REEL INFORMATION

REEL DIMENSIONS

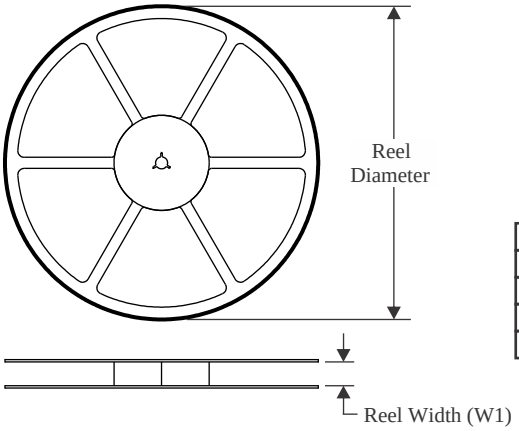

TAPE DIMENSIONS

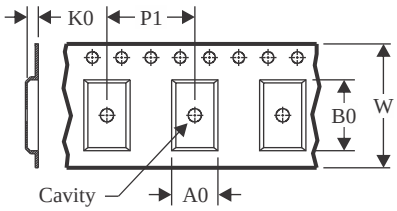

A0	Dimension designed to accommodate the component width
B0	Dimension designed to accommodate the component length
K0	Dimension designed to accommodate the component thickness
W	Overall width of the carrier tape
P1	Pitch between successive cavity centers

QUADRANT ASSIGNMENTS FOR PIN 1 ORIENTATION IN TAPE

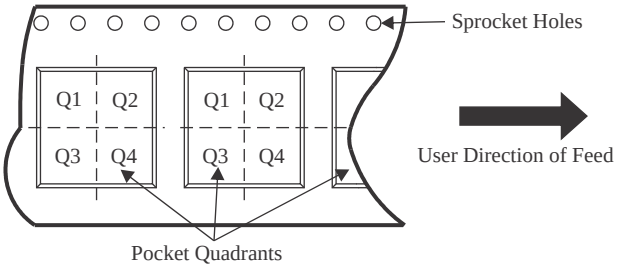

*All dimensions are nominal

Device	Package Type	Package Drawing	Pins	SPQ	Reel Diameter (mm)	Reel Width W1 (mm)	A0 (mm)	B0 (mm)	K0 (mm)	P1 (mm)	W (mm)	Pin1 Quadrant
UCC21530DWKR	SOIC	DWK	14	2000	330.0	16.4	10.75	10.7	2.7	12.0	16.0	Q1

TAPE AND REEL BOX DIMENSIONS

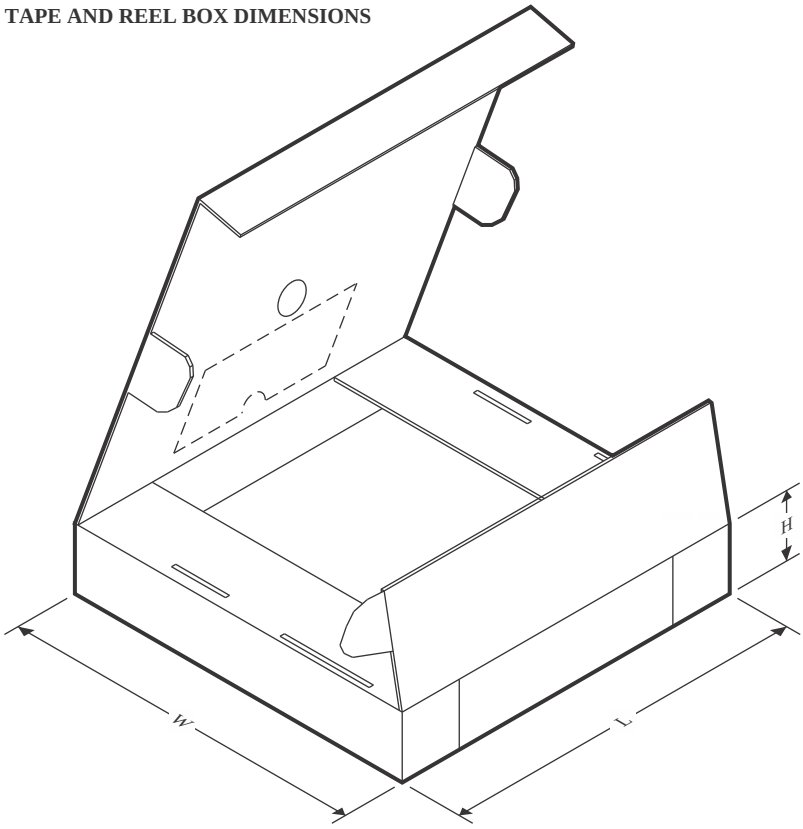

*All dimensions are nominal

Device	Package Type	Package Drawing	Pins	SPQ	Length (mm)	Width (mm)	Height (mm)
UCC21530DWKR	SOIC	DWK	14	2000	356.0	356.0	35.0

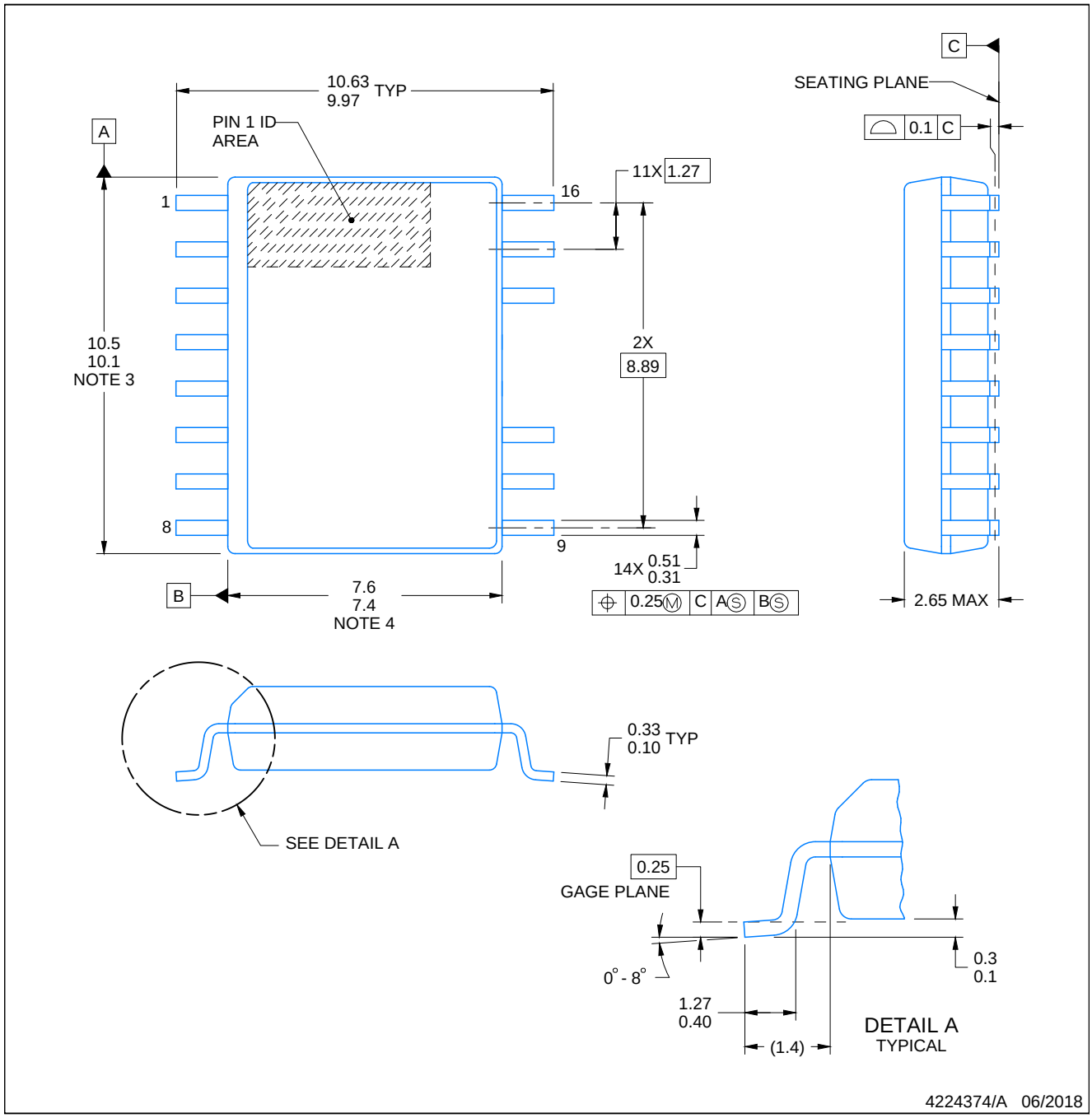

NOTES:

1. All linear dimensions are in millimeters. Dimensions in parenthesis are for reference only. Dimensioning and tolerancing per ASME Y14.5M.
2. This drawing is subject to change without notice.
3. This dimension does not include mold flash, protrusions, or gate burrs. Mold flash, protrusions, or gate burrs shall not exceed 0.15 mm, per side.
4. This dimension does not include interlead flash. Interlead flash shall not exceed 0.25 mm, per side.
5. Reference JEDEC registration MS-013.

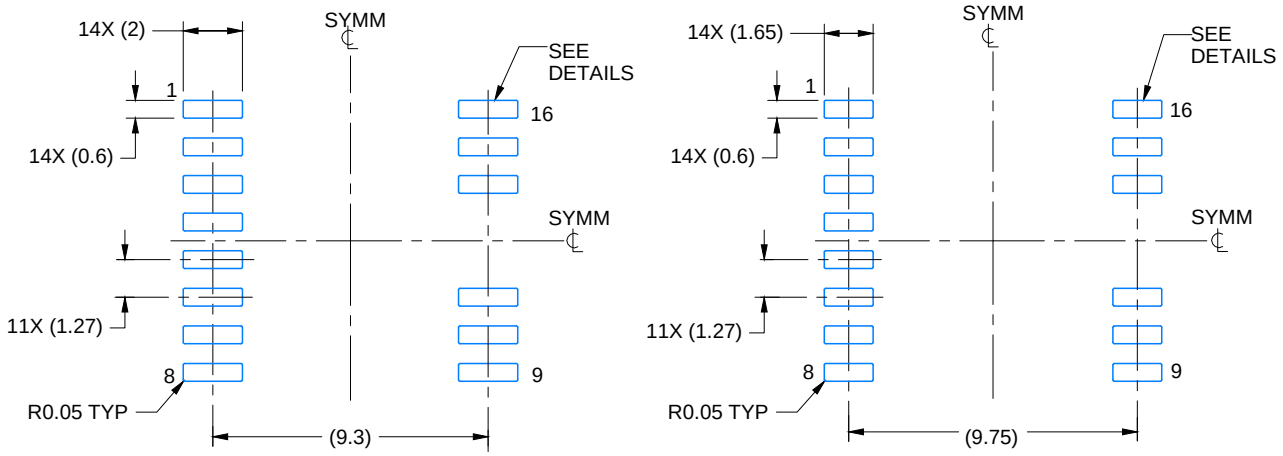

IPC-7351 NOMINAL
7.3 mm CLEARANCE/CREEPAGE

HV / ISOLATION OPTION
8.1 mm CLEARANCE/CREEPAGE

LAND PATTERN EXAMPLE
SCALE:4X

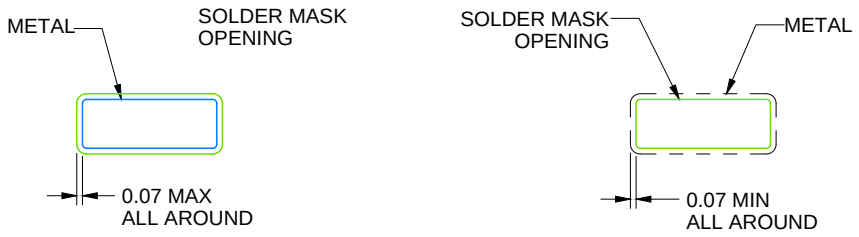

NON SOLDER MASK DEFINED

SOLDER MASK DEFINED

SOLDER MASK DETAILS

4224374/A 06/2018

NOTES: (continued)

6. Publication IPC-7351 may have alternate designs.
7. Solder mask tolerances between and around signal pads can vary based on board fabrication site.

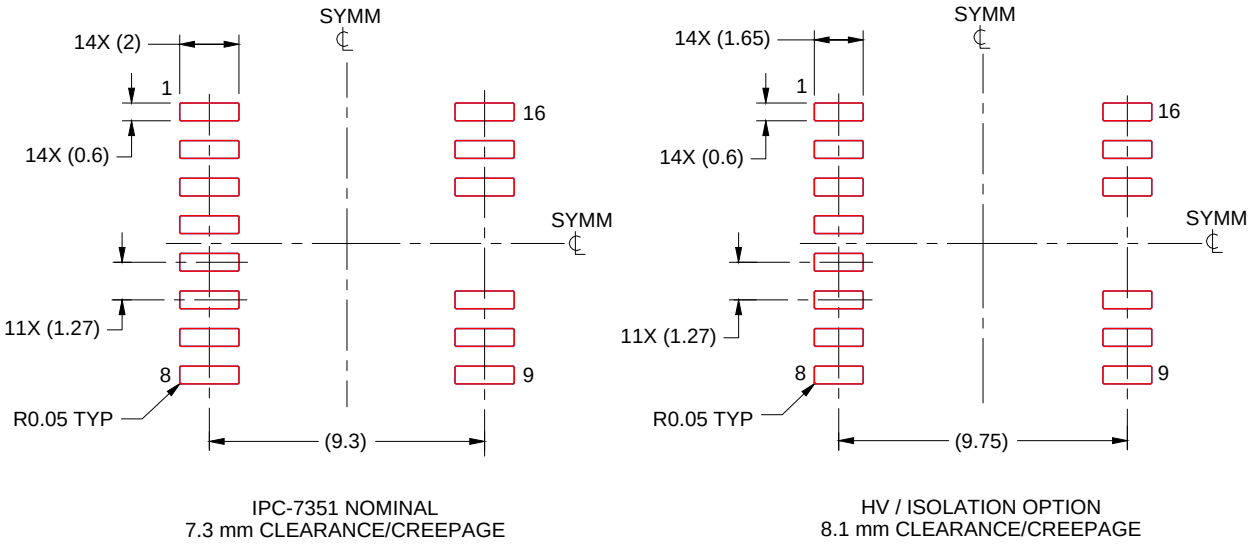

IPC-7351 NOMINAL
7.3 mm CLEARANCE/CREEPAGE

HV / ISOLATION OPTION
8.1 mm CLEARANCE/CREEPAGE

SOLDER PASTE EXAMPLE
BASED ON 0.125 mm THICK STENCIL
SCALE:4X

4224374/A 06/2018

NOTES: (continued)

8. Laser cutting apertures with trapezoidal walls and rounded corners may offer better paste release. IPC-7525 may have alternate design recommendations.
9. Board assembly site may have different recommendations for stencil design.

IMPORTANT NOTICE AND DISCLAIMER

TI PROVIDES TECHNICAL AND RELIABILITY DATA (INCLUDING DATA SHEETS), DESIGN RESOURCES (INCLUDING REFERENCE DESIGNS), APPLICATION OR OTHER DESIGN ADVICE, WEB TOOLS, SAFETY INFORMATION, AND OTHER RESOURCES “AS IS” AND WITH ALL FAULTS, AND DISCLAIMS ALL WARRANTIES, EXPRESS AND IMPLIED, INCLUDING WITHOUT LIMITATION ANY IMPLIED WARRANTIES OF MERCHANTABILITY, FITNESS FOR A PARTICULAR PURPOSE OR NON-INFRINGEMENT OF THIRD PARTY INTELLECTUAL PROPERTY RIGHTS.

These resources are intended for skilled developers designing with TI products. You are solely responsible for (1) selecting the appropriate TI products for your application, (2) designing, validating and testing your application, and (3) ensuring your application meets applicable standards, and any other safety, security, regulatory or other requirements.

These resources are subject to change without notice. TI grants you permission to use these resources only for development of an application that uses the TI products described in the resource. Other reproduction and display of these resources is prohibited. No license is granted to any other TI intellectual property right or to any third party intellectual property right. TI disclaims responsibility for, and you will fully indemnify TI and its representatives against, any claims, damages, costs, losses, and liabilities arising out of your use of these resources.

TI’s products are provided subject to TI’s Terms of Sale or other applicable terms available either on ti.com or provided in conjunction with such TI products. TI’s provision of these resources does not expand or otherwise alter TI’s applicable warranties or warranty disclaimers for TI products.

TI objects to and rejects any additional or different terms you may have proposed.

Mailing Address: Texas Instruments, Post Office Box 655303, Dallas, Texas 75265
Copyright © 2025, Texas Instruments Incorporated