SN74LVC07A Hex Buffer and Driver With Open-Drain Outputs

1 Features

- Operates From 1.65 V to 5 V
- Inputs and Open-Drain Outputs Accept Voltages Up to 5.5 V
- Max t_{pd} of 2.6 ns at 5 V
- Latch-Up Performance Exceeds 250 mA Per JESD 17
- I_{off} Supports Live Insertion, Partial-Power-Down Mode, and Back-Drive Protection

2 Applications

- AV Receiver
- Audio Dock: Portable
- Blu-ray Player and Home Theater
- MP3 Player or Recorder
- Personal Digital Assistant (PDA)
- Power: Telecom/Server AC/DC Supply: Single Controller: Analog and Digital
- Solid State Drive (SSD): Client and Enterprise
- TV: LCD, Digital, and High-Definition (HDTV)
- Tablet: Enterprise
- Video Analytics: Server
- Wireless Headset, Keyboard, and Mouse

3 Description

The SN74LVC07A device is a hex buffer and driver that is designed for 1.65-V to 5.5-V V_{CC} operation.

Device Information(1)

PART NUMBER	PACKAGE	BODY SIZE (NOM)
SN74LVC07AD	SOIC (14)	8.65 mm × 3.91 mm
SN74LVC07ADB	SSOP (14)	6.20 mm × 5.30 mm
SN74LVC07ADGV	TVSOP (14)	3.60 mm × 4.40 mm
SN74LVC07APW	TSSOP (14)	5.00 mm × 4.40 mm
SN74LVC07ANS	SO (14)	10.30 mm × 5.30 mm
SN74LVC07ARGY	VQFN (14)	3.50 mm × 3.50 mm

(1) For all available packages, see the orderable addendum at the end of the data sheet.

Simplified Schematic

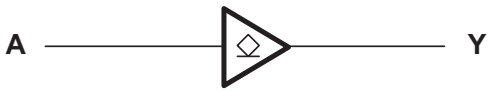

Copyright © 2016 Texas Instruments Incorporated

An IMPORTANT NOTICE at the end of this data sheet addresses availability, warranty, changes, use in safety-critical applications, intellectual property matters and other important disclaimers. PRODUCTION DATA.

Table of Contents

1 **Features** ... 1
2 **Applications** ... 1
3 **Description** ... 1
4 **Revision History** ... 2
5 **Pin Configuration and Functions** ... 4
6 **Specifications** ... 5
6.1 Absolute Maximum Ratings ... 5
6.2 ESD Ratings ... 5
6.3 Recommended Operating Conditions ... 5
6.4 Thermal Information ... 6
6.5 Electrical Characteristics—DC Limit Changes ... 6
6.6 Switching Characteristics ... 6
6.7 Operating Characteristics ... 7
6.8 Typical Characteristics ... 7
7 **Parameter Measurement Information** ... 8
7.1 V_{CC} = 1.8 V ± 0.15 V ... 8
7.2 V_{CC} = 2.5 V ± 0.2 V ... 9
7.3 V_{CC} = 2.7 and 3.3 V ± 0.3 V ... 10
7.4 V_{CC} = 5 V ± 0.5 V ... 11
8 **Detailed Description** ... 12
8.1 Overview ... 12
8.2 Functional Block Diagram ... 12
8.3 Feature Description ... 12
8.4 Device Functional Modes ... 12
9 **Application and Implementation** ... 13
9.1 Application Information ... 13
9.2 Typical Application ... 13
10 **Power Supply Recommendations** ... 14
11 **Layout** ... 14
11.1 Layout Guidelines ... 14
11.2 Layout Example ... 15
12 **Device and Documentation Support** ... 16
12.1 Documentation Support ... 16
12.2 Receiving Notification of Documentation Updates 16
12.3 Community Resources ... 16
12.4 Trademarks ... 16
12.5 Electrostatic Discharge Caution ... 16
12.6 Glossary ... 16
13 **Mechanical, Packaging, and Orderable Information** ... 16

4 Revision History

NOTE: Page numbers for previous revisions may differ from page numbers in the current version.

Changes from Revision V (May 2015) to Revision W — **Page**

- Changed *Pin Functions* table ... 4
- Added Junction temperature to the *Absolute Maximum Ratings* table ... 5
- Reformatted the *Electrical Characteristics* and the *Switching Characteristics* tables ... 6
- Changed *Typical Application Diagram* ... 13
- Added *Receiving Notification of Documentation Updates* section ... 16

Changes from Revision U (June 2014) to Revision V — **Page**

- Changed *Handling Ratings* table to *ESD Ratings* table ... 5
- Added industry standard terms to package designators in the *Thermal Information* table ... 6
- Changed from "High" to "High-Z" in the *Function Table* ... 12

Changes from Revision T (February 2011) to Revision U — **Page**

- Updated document to new TI data sheet format ... 1
- Removed *Ordering Information* table ... 1
- Added *Applications* ... 1
- Added I_{off} *Features* bullet ... 1
- Added *Device Information* table ... 1
- Added *Handling Ratings* table. ... 5
- Changed MAX operating free-air temperature from 85°C to 125°C. ... 5
- Updated *Thermal Information* table. ... 6
- Added –40°C TO +125°C temperature range to *Electrical Characteristics* table ... 6
- Added *Switching Characteristics* table for –40°C TO 125°C temperature range ... 6

Copyright © 1997–2016, Texas Instruments Incorporated

• Added *Typical Characteristics* 7

5 Pin Configuration and Functions

D, DB, DGV, NS, PW Package
14-Pin SOIC, SSOP, TVSOP, SO, TSSOP
Top View

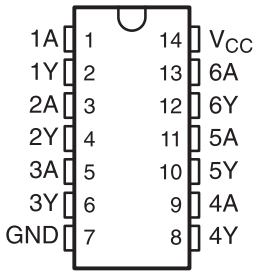

RGY Package
14-Pin VQFN
Top View

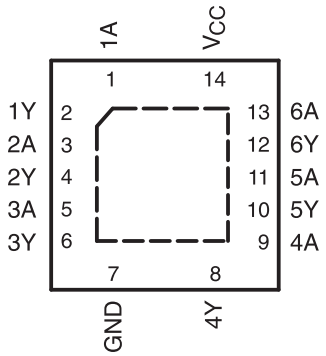

Pin Functions

PIN		I/O	DESCRIPTION
NO.	NAME		
1	1A	I	Input 1
2	1Y	O	Output 1
3	2A	I	Input 2
4	2Y	O	Output 2
5	3A	I	Input 3
6	3Y	O	Output 3
7	GND	—	Ground pin
8	4Y	O	Output 4
9	4A	I	Input 4
10	5Y	O	Output 5
11	5A	I	Input 5
12	6Y	O	Output 6
13	6A	I	Input 6
14	V_{CC}	—	Power pin

Copyright © 1997–2016, Texas Instruments Incorporated

6 Specifications

6.1 Absolute Maximum Ratings

over operating free-air temperature range (unless otherwise noted)[1]

			MIN	MAX	UNIT
V_{CC}	Supply voltage		–0.5	6.5	V
V_I	Input voltage[2]		–0.5	6.5	V
V_O	Output voltage		–0.5	6.5	V
I_{IK}	Input clamp current	$V_I < 0$		–50	mA
I_{OK}	Output clamp current	$V_O < 0$		–50	mA
I_O	Continuous output current			±50	mA
	Continuous current through V_{CC} or GND			±100	mA
T_j	Junction temperature			150	°C
T_{stg}	Storage temperature		–65	150	°C

(1) Stresses beyond those listed under *Absolute Maximum Ratings* may cause permanent damage to the device. These are stress ratings only, and functional operation of the device at these or any other conditions beyond those indicated under *Recommended Operating Conditions* is not implied. Exposure to absolute-maximum-rated conditions for extended periods may affect device reliability.
(2) The input and output negative-voltage ratings may be exceeded if the input and output current ratings are observed.

6.2 ESD Ratings

			VALUE	UNIT
$V_{(ESD)}$	Electrostatic discharge	Human body model (HBM), per ANSI/ESDA/JEDEC JS-001[1]	±4000	V
		Charged device model (CDM), per JEDEC specification JESD22-C101[2]	±1500	

(1) JEDEC document JEP155 states that 500-V HBM allows safe manufacturing with a standard ESD control process.
(2) JEDEC document JEP157 states that 250-V CDM allows safe manufacturing with a standard ESD control process.

6.3 Recommended Operating Conditions

over operating free-air temperature range (unless otherwise noted)[1]

			MIN	MAX	UNIT
V_{CC}	Supply voltage		1.65	5.5	V
V_{IH}	High-level input voltage	V_{CC} = 1.65 V to 1.95 V	0.65 × V_{CC}		V
		V_{CC} = 2.3 V to 2.7 V	1.7		
		V_{CC} = 2.7 V to 3.6 V	2		
		V_{CC} = 4.5 V to 5.5 V	0.7 × V_{CC}		
V_{IL}	Low-level input voltage	V_{CC} = 1.65 V to 1.95 V		0.35 × V_{CC}	V
		V_{CC} = 2.3 V to 2.7 V		0.7	
		V_{CC} = 2.7 V to 3.6 V		0.8	
		V_{CC} = 4.5 V to 5.5 V		0.3 × V_{CC}	
V_I	Input voltage		0	5.5	V
V_O	Output voltage		0	5.5	V
I_{OL}	Low-level output current	V_{CC} = 1.65 V		4	mA
		V_{CC} = 2.3 V		12	
		V_{CC} = 2.7 V		12	
		V_{CC} = 3 V		24	
		V_{CC} = 4.5 V		24	
T_A	Operating free-air temperature		–40	125	°C

(1) All unused inputs of the device must be held at V_{CC} or GND to ensure proper device operation. See *Implications of Slow or Floating CMOS Inputs*, SCBA004.

Copyright © 1997–2016, Texas Instruments Incorporated

6.4 Thermal Information

THERMAL METRIC[1]		SN74LVC07A						UNIT
		D (SOIC)	DB (SSOP)	DGV (TVSOP)	NS (SO)	PW (TSSOP)	RGY (VQFN)	
		14 PINS						
$R_{\theta JA}$	Junction-to-ambient thermal resistance	177.4	135.1	157.7	120.3	160.3	80.6	°C/W
$R_{\theta JC(top)}$	Junction-to-case (top) thermal resistance	75.4	86.7	78.3	76.3	84.4	97.0	°C/W
$R_{\theta JB}$	Junction-to-board thermal resistance	70.6	82.4	90.8	79.0	102.1	56.7	°C/W
ψ_{JT}	Junction-to-top characterization parameter	34.7	43.7	21.0	36.2	24.3	16.7	°C/W
ψ_{JB}	Junction-to-board characterization parameter	70.4	81.9	90.1	78.7	101.4	56.8	°C/W
$R_{\theta JC(bot)}$	Junction-to-case (bottom) thermal resistance	n/a	n/a	n/a	n/a	n/a	35.8	°C/W

(1) For more information about traditional and new thermal metrics, see the *Semiconductor and IC Package Thermal Metrics* application report.

6.5 Electrical Characteristics—DC Limit Changes

T_A = –40°C to +125°C, unless otherwise noted

PARAMETER	TEST CONDITIONS	V_{CC}	MIN	TYP[1]	MAX	UNIT
V_{OL}	I_{OL} = 100 µA	1.65 V to 5.5 V			0.2	V
	I_{OL} = 4 mA	1.65 V			0.45	
	I_{OL} = 12 mA	2.3 V			0.7	
		2.7 V			0.4	
	I_{OL} = 24 mA	3 V			0.55	
I_I	V_I = 5.5 V or GND	3.6 V			±5	µA
I_{off}	V_I or V_O = 5.5 V	0 V			±10	µA
I_{CC}	V_I = V_{CC} or GND, I_O = 0	3.6 V			10	µA
ΔI_{CC}	One input at V_{CC} – 0.6 V, Other inputs at V_{CC} or GND	2.7 V to 3.6 V			500	µA
C_i	V_I = V_{CC} or GND	3.3 V		5.0		pF

(1) All typical values are at V_{CC} = 3.3 V, T_A = 25°C.

6.6 Switching Characteristics

over recommended operating free-air temperature range (unless otherwise noted) (see Figure 3 through Figure 6)

PARAMETER	FROM (INPUT)	TO (OUTPUT)	TEST CONDITIONS		MIN	MAX	UNIT
t_{pd}	A	Y	–40°C to 85°C	V_{CC} = 1.8 V ± 0.15 V	1	5.6	ns
				V_{CC} = 2.5 V ± 0.2 V	1	3.4	
				V_{CC} = 2.7 V	1	3.3	
				V_{CC} = 3.3 V ± 0.3 V	1	3.6	
				V_{CC} = 5 V ± 0.5 V	1	2.6	
			–40°C to 125°C	V_{CC} = 1.8 V ± 0.15 V	1	6.1	
				V_{CC} = 2.5 V ± 0.2 V	1	3.9	
				V_{CC} = 2.7 V	1	3.8	
				V_{CC} = 3.3 V ± 0.3 V	1	4.1	
				V_{CC} = 5 V ± 0.5 V	1	3.1	

Copyright © 1997–2016, Texas Instruments Incorporated

6.7 Operating Characteristics

T_A = 25°C

PARAMETER		TEST CONDITIONS	V_{CC} = 1.8 V	V_{CC} = 2.5 V	V_{CC} = 3.3 V	V_{CC} = 5 V	UNIT
			TYP	TYP	TYP	TYP	
C_{pd}	Power dissipation capacitance per buffer and driver	f = 10 MHz	1.8	2	2.5	3.78	pF

6.8 Typical Characteristics

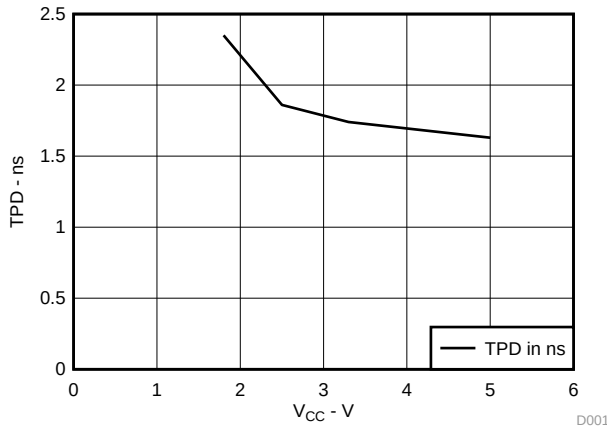

Figure 1. TPD vs V_{CC}

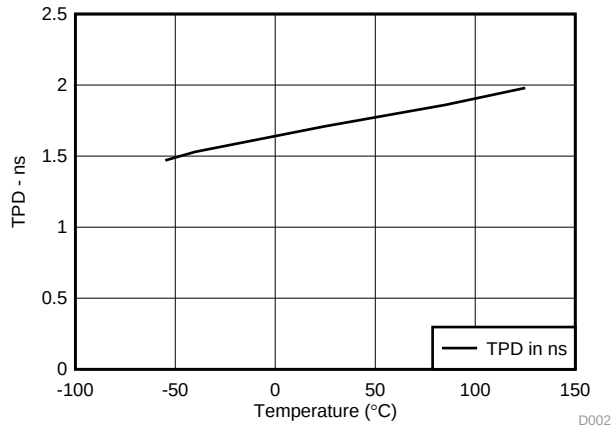

Figure 2. TPD vs Temperature

7 Parameter Measurement Information

7.1 V_{CC} = 1.8 V ± 0.15 V

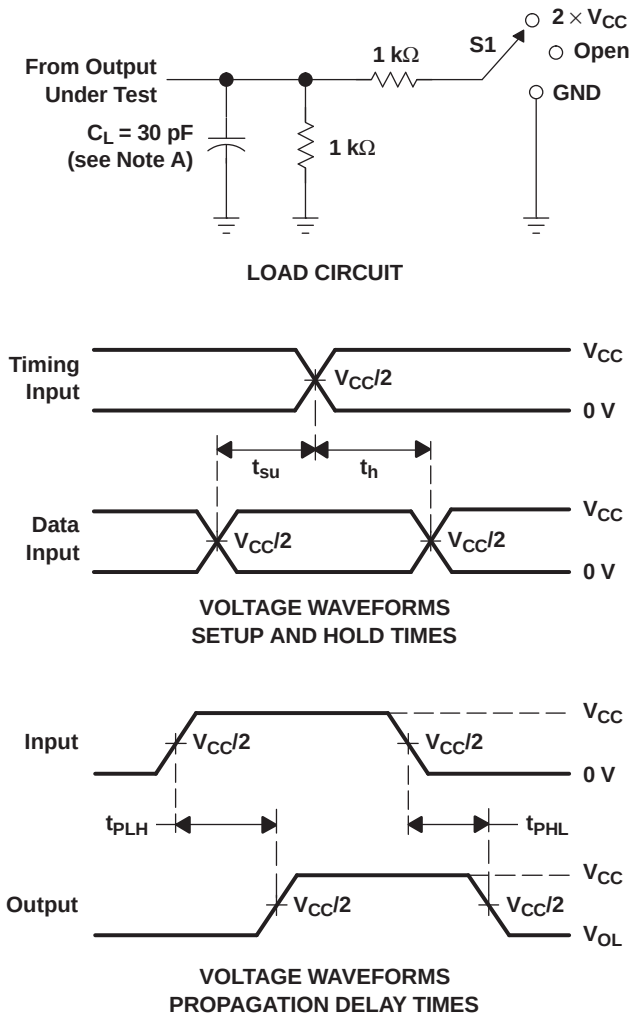

TEST	S1
t_{PZL} (see Note F)	2 × V_{CC}
t_{PLZ} (see Note G)	2 × V_{CC}
t_{PHZ}/t_{PZH}	2 × V_{CC}

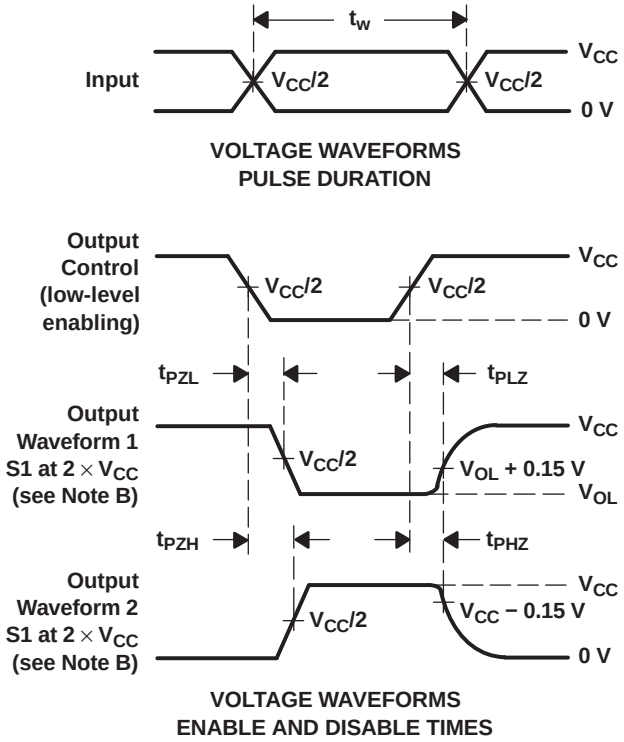

NOTES:
A. C_L includes probe and jig capacitance.
B. Waveform 1 is for an output with internal conditions such that the output is low, except when disabled by the output control. Waveform 2 is for an output with internal conditions such that the output is high, except when disabled by the output control.
C. All input pulses are supplied by generators having the following characteristics: PRR ≤ 10 MHz, Z_O = 50 Ω, t_r ≤ 2 ns, t_f ≤ 2 ns.
D. The outputs are measured one at a time, with one transition per measurement.
E. Since this device has open-drain outputs, t_{PLZ} and t_{PZL} are the same as t_{pd}.
F. t_{PZL} is measured at $V_{CC}/2$.
G. t_{PLZ} is measured at V_{OL} + 0.15 V.
H. All parameters and waveforms are not applicable to all devices.

Figure 3. Load Circuit and Voltage Waveforms

Copyright © 1997–2016, Texas Instruments Incorporated

7.2 V_{CC} = 2.5 V ± 0.2 V

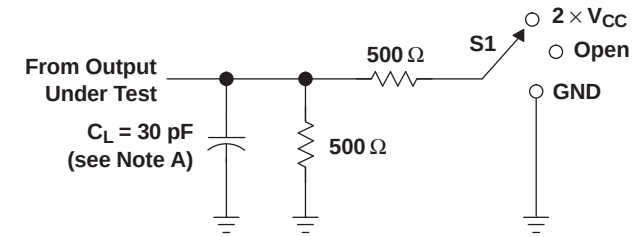

LOAD CIRCUIT

TEST	S1
t_{PZL} (see Note F)	2 × V_{CC}
t_{PLZ} (see Note G)	2 × V_{CC}
t_{PHZ}/t_{PZH}	2 × V_{CC}

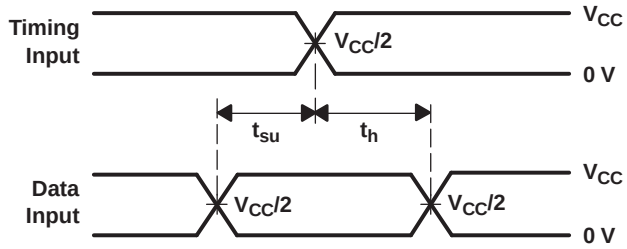

VOLTAGE WAVEFORMS
SETUP AND HOLD TIMES

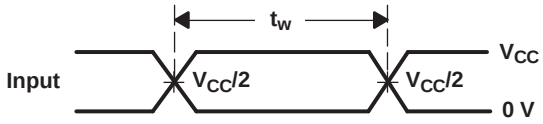

VOLTAGE WAVEFORMS
PULSE DURATION

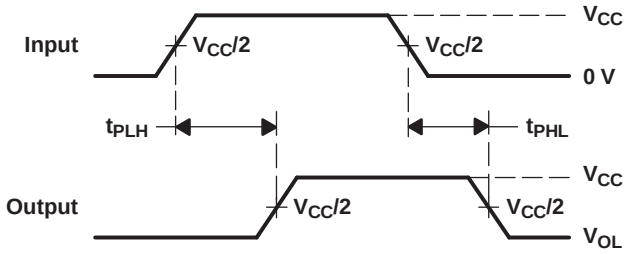

VOLTAGE WAVEFORMS
PROPAGATION DELAY TIMES

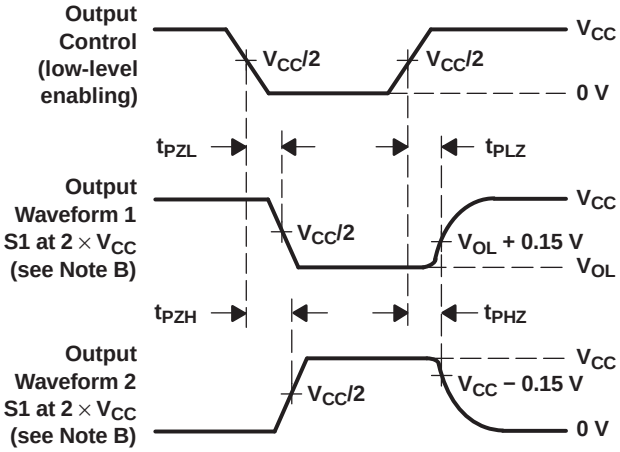

VOLTAGE WAVEFORMS
ENABLE AND DISABLE TIMES

NOTES:
A. C_L includes probe and jig capacitance.
B. Waveform 1 is for an output with internal conditions such that the output is low, except when disabled by the output control. Waveform 2 is for an output with internal conditions such that the output is high, except when disabled by the output control.
C. All input pulses are supplied by generators having the following characteristics: PRR ≤ 10 MHz, Z_O = 50 Ω, t_r ≤ 2 ns, t_f ≤ 2 ns.
D. The outputs are measured one at a time, with one transition per measurement.
E. Since this device has open-drain outputs, t_{PLZ} and t_{PZL} are the same as t_{pd}.
F. t_{PZL} is measured at $V_{CC}/2$.
G. t_{PLZ} is measured at V_{OL} + 0.15 V.
H. All parameters and waveforms are not applicable to all devices.

Figure 4. Load Circuit and Voltage Waveforms

7.3 V_{CC} = 2.7 and 3.3 V ± 0.3 V

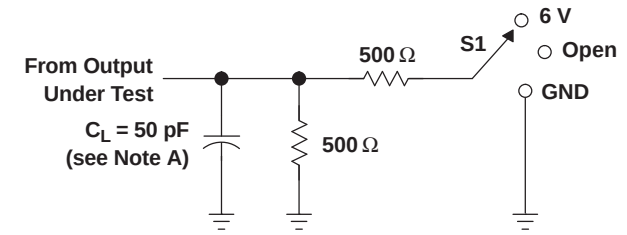

LOAD CIRCUIT

TEST	S1
t_{PZL} (see Note F)	6 V
t_{PLZ} (see Note G)	6 V
t_{PHZ}/t_{PZH}	6 V

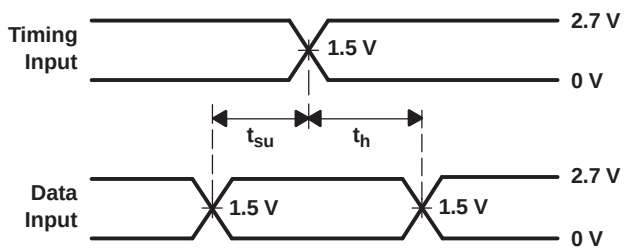

VOLTAGE WAVEFORMS
SETUP AND HOLD TIMES

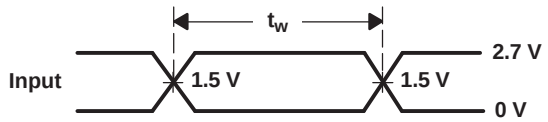

VOLTAGE WAVEFORMS
PULSE DURATION

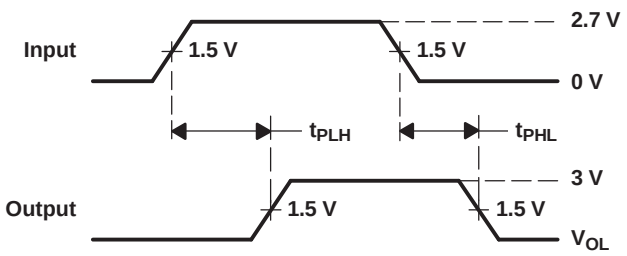

VOLTAGE WAVEFORMS
PROPAGATION DELAY TIMES

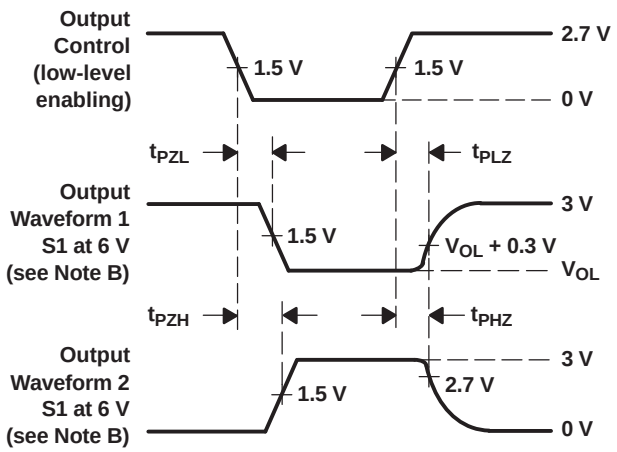

VOLTAGE WAVEFORMS
ENABLE AND DISABLE TIMES

NOTES:
A. C_L includes probe and jig capacitance.
B. Waveform 1 is for an output with internal conditions such that the output is low, except when disabled by the output control. Waveform 2 is for an output with internal conditions such that the output is high, except when disabled by the output control.
C. All input pulses are supplied by generators having the following characteristics: PRR ≤ 10 MHz, Z_O = 50 Ω, t_r ≤ 2.5 ns, t_f ≤ 2.5 ns.
D. The outputs are measured one at a time, with one transition per measurement.
E. Since this device has open-drain outputs, t_{PLZ} and t_{PZL} are the same as t_{pd}.
F. t_{PZL} is measured at 1.5 V.
G. t_{PLZ} is measured at V_{OL} + 0.3 V.
H. All parameters and waveforms are not applicable to all devices.

Figure 5. Load Circuit and Voltage Waveforms

Copyright © 1997–2016, Texas Instruments Incorporated

7.4 V_{CC} = 5 V ± 0.5 V

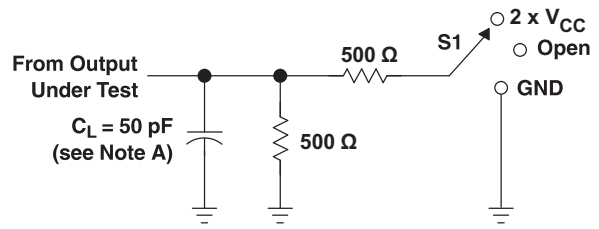

LOAD CIRCUIT

TEST	S1
t_{PZL} (see Note F)	2 x V_{CC}
t_{PLZ} (see Note G)	2 x V_{CC}
t_{PHZ}/t_{PZH}	2 x V_{CC}

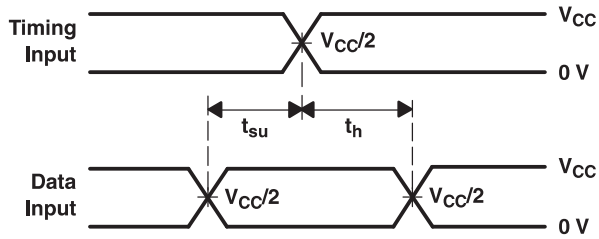

VOLTAGE WAVEFORMS
SETUP AND HOLD TIMES

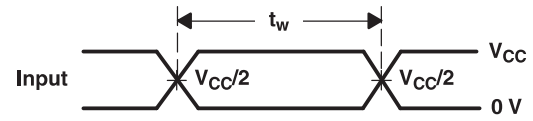

VOLTAGE WAVEFORMS
PULSE DURATION

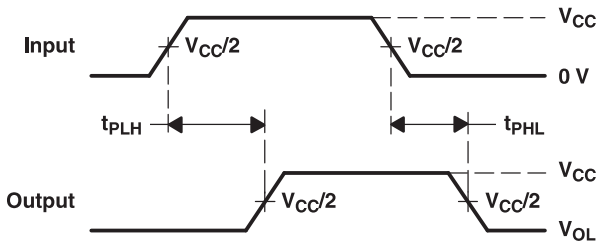

VOLTAGE WAVEFORMS
PROPAGATION DELAY TIMES

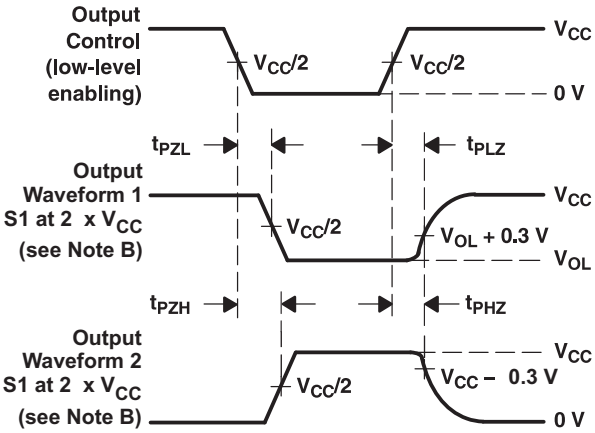

VOLTAGE WAVEFORMS
ENABLE AND DISABLE TIMES

NOTES: A. C_L includes probe and jig capacitance.
B. Waveform 1 is for an output with internal connections such that the output is low, except when disabled by the output control. Waveform 2 is for an output with internal connections such that the output is high, except when disabled by the output control.
C. All input pulses are supplied by generators having the following characteristics: PRR ≤ 10 MHz, Z_O = 50 Ω, t_r ≤ 2.5 ns, t_f ≤ 2.5 ns.
D. The outputs are measured one at a time, with one transition per measurement.
E. Since this device has open-drain outputs, t_{PLZ} and t_{PZL} are the same as t_{pd}.
F. t_{PZL} is measured at $V_{CC}/2$.
G. t_{PLZ} is measured at V_{OL} + 0.3 V.
H. All parameters and waveforms are not applicable to all devices.

Figure 6. Load Circuit and Voltage Waveforms

8 Detailed Description

8.1 Overview

The outputs of the SN74LVC07A device are open drain and can be connected to other open-drain outputs to implement active-low wired-OR or active-high wired-AND functions. The maximum sink current is 24 mA.

Inputs can be driven from 1.8-V, 2.5-V, 3.3-V (LVTTL), or 5-V (CMOS) devices. This feature allows the use of this device as translators in a mixed-system environment.

This device is fully specified for partial-power-down applications using I_{off}. The I_{off} circuitry disables the outputs, preventing damaging current backflow through the device when it is powered down.

8.2 Functional Block Diagram

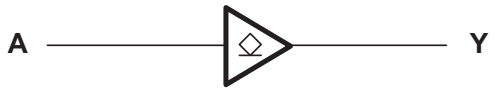

Copyright © 2016 Texas Instruments Incorporated

8.3 Feature Description

- Wide operating voltage range
  - Operates from 1.65 V to 5.5 V
- Allows up or down voltage translation
  - Inputs and outputs accept voltages to 5.5 V
- I_{off} feature
  - Allows voltages on the inputs and outputs when V_{CC} is 0 V

8.4 Device Functional Modes

Table 1 lists the functional modes of the SN74LVC07A.

Table 1. Function Table

INPUT A	OUTPUT Y
H	Hi-Z
L	L

Copyright © 1997–2016, Texas Instruments Incorporated

9 Application and Implementation

NOTE

Information in the following applications sections is not part of the TI component specification, and TI does not warrant its accuracy or completeness. TI's customers are responsible for determining suitability of components for their purposes. Customers should validate and test their design implementation to confirm system functionality.

9.1 Application Information

The SN74LVC07A device is a high-drive, open-drain CMOS device that can be used for a multitude of buffer-type functions. It can produce 24 mA of drive current at 3.3 V. Therefore, this device is ideal for driving multiple inputs and for high-speed applications up to 100 MHz. The inputs and outputs are 5.5-V tolerant allowing the device to translate up to 5.5 V or down to V_{CC}.

9.2 Typical Application

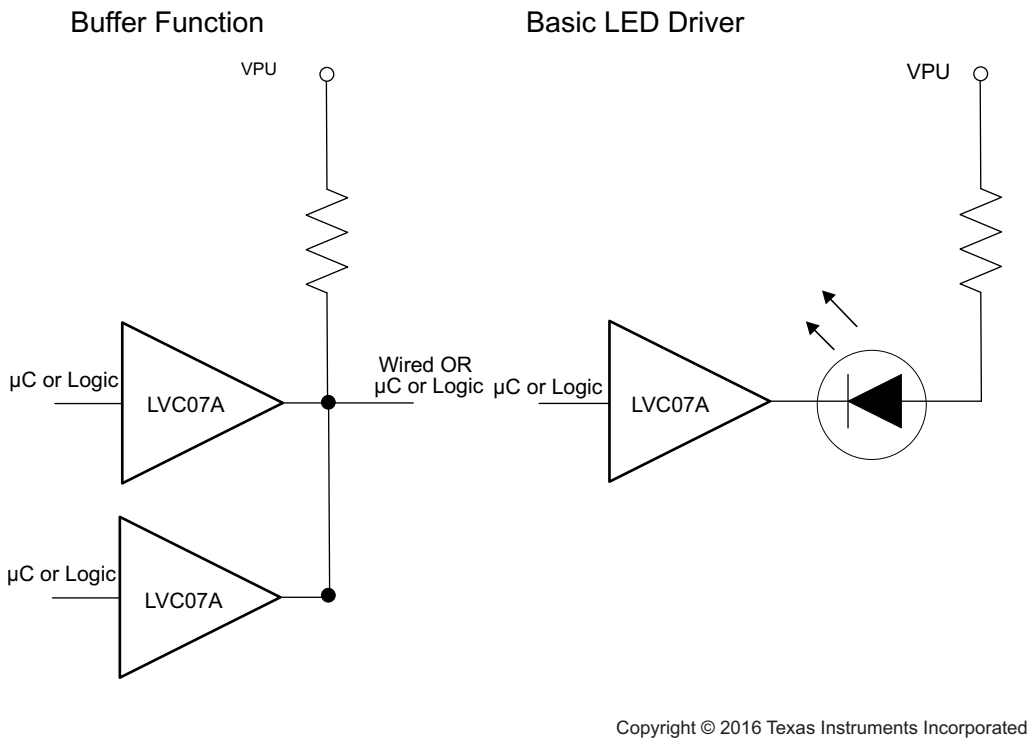

Figure 7. Typical Application Diagram

9.2.1 Design Requirements

This device uses CMOS technology and has balanced output drive. Take care to avoid bus contention because it can drive currents that would exceed maximum limits. The high drive will also create fast edges into light loads; therefore, routing and load conditions must be considered to prevent ringing.

9.2.2 Detailed Design Procedure

1. Recommended Input Conditions
   - Rise time and fall time specs: See ($\Delta t/\Delta V$) in the *Recommended Operating Conditions* table.
   - Specified high and low levels: See (V_{IH} and V_{IL}) in the *Recommended Operating Conditions* table.
   - Inputs are overvoltage tolerant allowing them to go as high as 5.5 V at any valid V_{CC}.
2. Recommended Output Conditions

Typical Application (continued)

- Load currents must not exceed 25 mA per output and 50 mA total for the part.
- Outputs must not be pulled above 5.5 V.

9.2.3 Application Curve

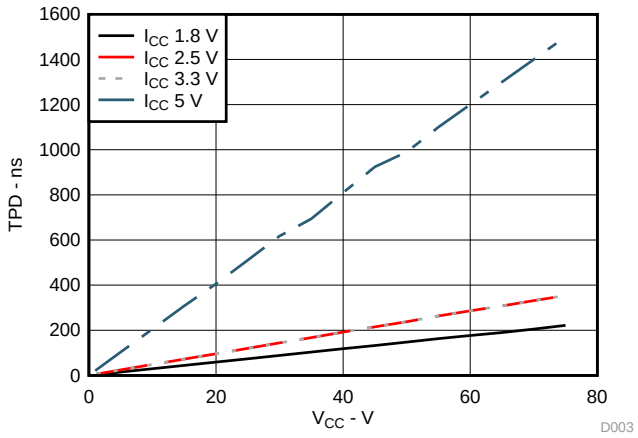

Figure 8. I_{CC} vs Frequency

10 Power Supply Recommendations

The power supply can be any voltage between the MIN and MAX supply voltage rating located in the *Recommended Operating Conditions* table.

Each V_{CC} pin must have a good bypass capacitor to prevent power disturbance. For devices with a single supply, 0.1 µf is recommended; if there are multiple V_{CC} pins, then 0.01 µf or 0.022 µf is recommended for each power pin. It is acceptable to parallel multiple bypass caps to reject different frequencies of noise. A 0.1 µf and a 1 µf are commonly used in parallel. The bypass capacitor must be installed as close to the power pin as possible for best results.

11 Layout

11.1 Layout Guidelines

When using multiple bit logic devices inputs must never float.

In many cases, functions or parts of functions of digital logic devices are unused, for example, when only two inputs of a triple-input AND gate are used or only 3 of the 4 buffer gates are used. Such input pins must not be left unconnected because the undefined voltages at the outside connections result in undefined operational states. Figure 9 specifies the rules that must be observed under all circumstances. All unused inputs of digital logic devices must be connected to a high or low bias to prevent them from floating. The logic level that must be applied to any particular unused input depends on the function of the device. Generally they will be tied to GND or V_{CC}, whichever makes more sense or is more convenient. It is generally acceptable to float outputs, unless the part is a transceiver.

Copyright © 1997–2016, Texas Instruments Incorporated

11.2 Layout Example

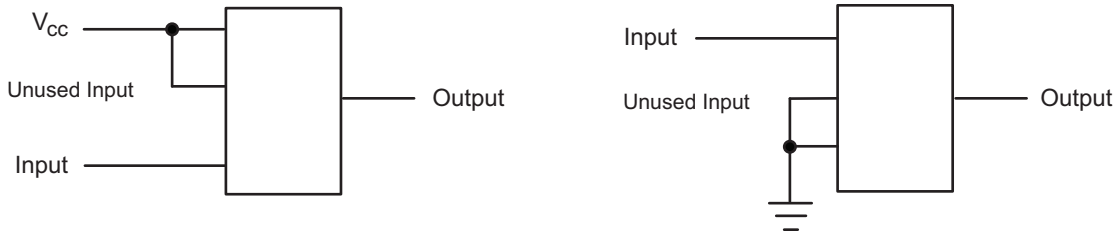

Figure 9. Layout Diagram

12 Device and Documentation Support

12.1 Documentation Support

12.1.1 Related Documentation

For related documentation see the following:

- *Implications of Slow or Floating CMOS Inputs*, SCBA004.
- *Semiconductor and IC Package Thermal Metrics*, SPRA953.

12.2 Receiving Notification of Documentation Updates

To receive notification of documentation updates, navigate to the device product folder on ti.com. In the upper right corner, click on *Alert me* to register and receive a weekly digest of any product information that has changed. For change details, review the revision history included in any revised document.

12.3 Community Resources

The following links connect to TI community resources. Linked contents are provided "AS IS" by the respective contributors. They do not constitute TI specifications and do not necessarily reflect TI's views; see TI's Terms of Use.

TI E2E™ Online Community ***TI's Engineer-to-Engineer (E2E) Community.*** Created to foster collaboration among engineers. At e2e.ti.com, you can ask questions, share knowledge, explore ideas and help solve problems with fellow engineers.

Design Support ***TI's Design Support*** Quickly find helpful E2E forums along with design support tools and contact information for technical support.

12.4 Trademarks

E2E is a trademark of Texas Instruments.
All other trademarks are the property of their respective owners.

12.5 Electrostatic Discharge Caution

These devices have limited built-in ESD protection. The leads should be shorted together or the device placed in conductive foam during storage or handling to prevent electrostatic damage to the MOS gates.

12.6 Glossary

SLYZ022 — *TI Glossary*.

This glossary lists and explains terms, acronyms, and definitions.

13 Mechanical, Packaging, and Orderable Information

The following pages include mechanical, packaging, and orderable information. This information is the most current data available for the designated devices. This data is subject to change without notice and revision of this document. For browser-based versions of this data sheet, refer to the left-hand navigation.

Copyright © 1997–2016, Texas Instruments Incorporated

PACKAGING INFORMATION

Orderable part number	Status (1)	Material type (2)	Package | Pins	Package qty | Carrier	RoHS (3)	Lead finish/ Ball material (4)	MSL rating/ Peak reflow (5)	Op temp (°C)	Part marking (6)
SN74LVC07AD	Active	Production	SOIC (D) | 14	50 | TUBE	Yes	NIPDAU	Level-1-260C-UNLIM	-40 to 125	LVC07A
SN74LVC07AD.B	Active	Production	SOIC (D) | 14	50 | TUBE	Yes	NIPDAU	Level-1-260C-UNLIM	-40 to 125	LVC07A
SN74LVC07ADBR	Active	Production	SSOP (DB) | 14	2000 | LARGE T&R	Yes	NIPDAU	Level-1-260C-UNLIM	-40 to 125	LC07A
SN74LVC07ADBR.B	Active	Production	SSOP (DB) | 14	2000 | LARGE T&R	Yes	NIPDAU	Level-1-260C-UNLIM	-40 to 125	LC07A
SN74LVC07ADE4	Active	Production	SOIC (D) | 14	50 | TUBE	Yes	NIPDAU	Level-1-260C-UNLIM	-40 to 125	LVC07A
SN74LVC07ADGVR	Active	Production	TVSOP (DGV) | 14	2000 | LARGE T&R	Yes	NIPDAU	Level-1-260C-UNLIM	-40 to 125	LC07A
SN74LVC07ADGVR.B	Active	Production	TVSOP (DGV) | 14	2000 | LARGE T&R	Yes	NIPDAU	Level-1-260C-UNLIM	-40 to 125	LC07A
SN74LVC07ADGVR1G4	Active	Production	TVSOP (DGV) | 14	2000 | LARGE T&R	Yes	NIPDAU	Level-1-260C-UNLIM	-40 to 125	LC07A
SN74LVC07ADGVR1G4.B	Active	Production	TVSOP (DGV) | 14	2000 | LARGE T&R	Yes	NIPDAU	Level-1-260C-UNLIM	-40 to 125	LC07A
SN74LVC07ADR	Active	Production	SOIC (D) | 14	2500 | LARGE T&R	Yes	NIPDAU | SN	Level-1-260C-UNLIM	-40 to 125	LVC07A
SN74LVC07ADR.B	Active	Production	SOIC (D) | 14	2500 | LARGE T&R	Yes	NIPDAU	Level-1-260C-UNLIM	-40 to 125	LVC07A
SN74LVC07ADRG3	Active	Production	SOIC (D) | 14	2500 | LARGE T&R	Yes	SN	Level-1-260C-UNLIM	-40 to 125	LVC07A
SN74LVC07ADRG3.B	Active	Production	SOIC (D) | 14	2500 | LARGE T&R	Yes	SN	Level-1-260C-UNLIM	-40 to 125	LVC07A
SN74LVC07ADRG4	Active	Production	SOIC (D) | 14	2500 | LARGE T&R	Yes	NIPDAU | NIPDAU	Level-1-260C-UNLIM	-40 to 125	LVC07A
SN74LVC07ADRG4.B	Active	Production	SOIC (D) | 14	2500 | LARGE T&R	Yes	NIPDAU	Level-1-260C-UNLIM	-40 to 125	LVC07A
SN74LVC07ADT	Active	Production	SOIC (D) | 14	250 | SMALL T&R	Yes	NIPDAU	Level-1-260C-UNLIM	-40 to 125	LVC07A
SN74LVC07ADT.B	Active	Production	SOIC (D) | 14	250 | SMALL T&R	Yes	NIPDAU	Level-1-260C-UNLIM	-40 to 125	LVC07A
SN74LVC07ANSR	Active	Production	SOP (NS) | 14	2000 | LARGE T&R	Yes	NIPDAU	Level-1-260C-UNLIM	-40 to 125	LVC07A
SN74LVC07ANSR.B	Active	Production	SOP (NS) | 14	2000 | LARGE T&R	Yes	NIPDAU	Level-1-260C-UNLIM	-40 to 125	LVC07A
SN74LVC07APW	Active	Production	TSSOP (PW) | 14	90 | TUBE	Yes	NIPDAU	Level-1-260C-UNLIM	-40 to 125	LC07A
SN74LVC07APW.B	Active	Production	TSSOP (PW) | 14	90 | TUBE	Yes	NIPDAU	Level-1-260C-UNLIM	-40 to 125	LC07A
SN74LVC07APWE4	Active	Production	TSSOP (PW) | 14	90 | TUBE	Yes	NIPDAU	Level-1-260C-UNLIM	-40 to 125	LC07A
SN74LVC07APWG4	Active	Production	TSSOP (PW) | 14	90 | TUBE	Yes	NIPDAU	Level-1-260C-UNLIM	-40 to 125	LC07A
SN74LVC07APWR	Active	Production	TSSOP (PW) | 14	2000 | LARGE T&R	Yes	NIPDAU | SN	Level-1-260C-UNLIM	-40 to 125	LC07A
SN74LVC07APWR.B	Active	Production	TSSOP (PW) | 14	2000 | LARGE T&R	Yes	NIPDAU	Level-1-260C-UNLIM	-40 to 125	LC07A
SN74LVC07APWRE4	Active	Production	TSSOP (PW) | 14	2000 | LARGE T&R	Yes	NIPDAU	Level-1-260C-UNLIM	-40 to 125	LC07A
SN74LVC07APWRG3	Active	Production	TSSOP (PW) | 14	2000 | LARGE T&R	Yes	SN	Level-1-260C-UNLIM	-40 to 125	LC07A
SN74LVC07APWRG3.B	Active	Production	TSSOP (PW) | 14	2000 | LARGE T&R	Yes	SN	Level-1-260C-UNLIM	-40 to 125	LC07A
SN74LVC07APWRG4	Active	Production	TSSOP (PW) | 14	2000 | LARGE T&R	Yes	NIPDAU	Level-1-260C-UNLIM	-40 to 125	LC07A

Orderable part number	Status (1)	Material type (2)	Package | Pins	Package qty | Carrier	RoHS (3)	Lead finish/ Ball material (4)	MSL rating/ Peak reflow (5)	Op temp (°C)	Part marking (6)
SN74LVC07APWRG4.B	Active	Production	TSSOP (PW) | 14	2000 | LARGE T&R	Yes	NIPDAU	Level-1-260C-UNLIM	-40 to 125	LC07A
SN74LVC07APWT	Active	Production	TSSOP (PW) | 14	250 | SMALL T&R	Yes	NIPDAU	Level-1-260C-UNLIM	-40 to 125	LC07A
SN74LVC07APWT.B	Active	Production	TSSOP (PW) | 14	250 | SMALL T&R	Yes	NIPDAU	Level-1-260C-UNLIM	-40 to 125	LC07A
SN74LVC07APWTG4	Active	Production	TSSOP (PW) | 14	250 | SMALL T&R	Yes	NIPDAU	Level-1-260C-UNLIM	-40 to 125	LC07A
SN74LVC07ARGYR	Active	Production	VQFN (RGY) | 14	3000 | LARGE T&R	Yes	NIPDAU	Level-2-260C-1 YEAR	-40 to 125	LC07A
SN74LVC07ARGYR.B	Active	Production	VQFN (RGY) | 14	3000 | LARGE T&R	Yes	NIPDAU	Level-2-260C-1 YEAR	-40 to 125	LC07A
SN74LVC07ARGYRG4	Active	Production	VQFN (RGY) | 14	3000 | LARGE T&R	Yes	NIPDAU	Level-2-260C-1 YEAR	-40 to 125	LC07A

(1) **Status:** For more details on status, see our product life cycle.

(2) **Material type:** When designated, preproduction parts are prototypes/experimental devices, and are not yet approved or released for full production. Testing and final process, including without limitation quality assurance, reliability performance testing, and/or process qualification, may not yet be complete, and this item is subject to further changes or possible discontinuation. If available for ordering, purchases will be subject to an additional waiver at checkout, and are intended for early internal evaluation purposes only. These items are sold without warranties of any kind.

(3) **RoHS values:** Yes, No, RoHS Exempt. See the TI RoHS Statement for additional information and value definition.

(4) **Lead finish/Ball material:** Parts may have multiple material finish options. Finish options are separated by a vertical ruled line. Lead finish/Ball material values may wrap to two lines if the finish value exceeds the maximum column width.

(5) **MSL rating/Peak reflow:** The moisture sensitivity level ratings and peak solder (reflow) temperatures. In the event that a part has multiple moisture sensitivity ratings, only the lowest level per JEDEC standards is shown. Refer to the shipping label for the actual reflow temperature that will be used to mount the part to the printed circuit board.

(6) **Part marking:** There may be an additional marking, which relates to the logo, the lot trace code information, or the environmental category of the part.

Multiple part markings will be inside parentheses. Only one part marking contained in parentheses and separated by a "~" will appear on a part. If a line is indented then it is a continuation of the previous line and the two combined represent the entire part marking for that device.

Important Information and Disclaimer: The information provided on this page represents TI's knowledge and belief as of the date that it is provided. TI bases its knowledge and belief on information provided by third parties, and makes no representation or warranty as to the accuracy of such information. Efforts are underway to better integrate information from third parties. TI has taken and continues to take reasonable steps to provide representative and accurate information but may not have conducted destructive testing or chemical analysis on incoming materials and chemicals. TI and TI suppliers consider certain information to be proprietary, and thus CAS numbers and other limited information may not be available for release.

In no event shall TI's liability arising out of such information exceed the total purchase price of the TI part(s) at issue in this document sold by TI to Customer on an annual basis.

OTHER QUALIFIED VERSIONS OF SN74LVC07A :

- Automotive : SN74LVC07A-Q1
- Enhanced Product : SN74LVC07A-EP

NOTE: Qualified Version Definitions:

- Automotive - Q100 devices qualified for high-reliability automotive applications targeting zero defects
- Enhanced Product - Supports Defense, Aerospace and Medical Applications

TAPE AND REEL INFORMATION

REEL DIMENSIONS

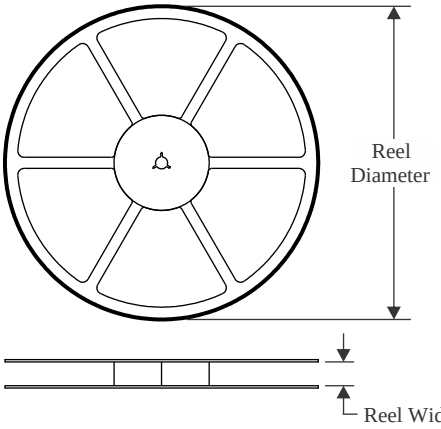

TAPE DIMENSIONS

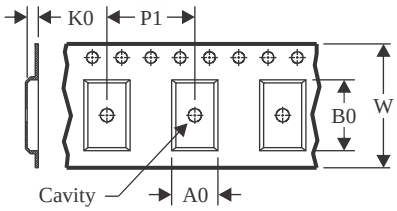

A0	Dimension designed to accommodate the component width
B0	Dimension designed to accommodate the component length
K0	Dimension designed to accommodate the component thickness
W	Overall width of the carrier tape
P1	Pitch between successive cavity centers

QUADRANT ASSIGNMENTS FOR PIN 1 ORIENTATION IN TAPE

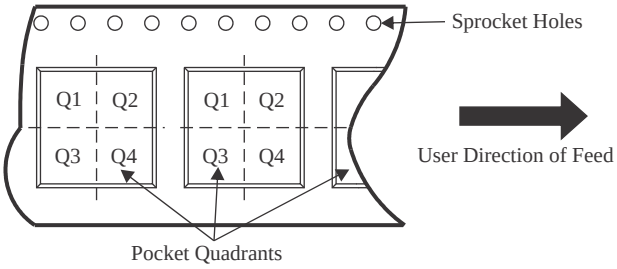

*All dimensions are nominal

Device	Package Type	Package Drawing	Pins	SPQ	Reel Diameter (mm)	Reel Width W1 (mm)	A0 (mm)	B0 (mm)	K0 (mm)	P1 (mm)	W (mm)	Pin1 Quadrant
SN74LVC07ADBR	SSOP	DB	14	2000	330.0	16.4	8.35	6.6	2.4	12.0	16.0	Q1
SN74LVC07ADGVR	TVSOP	DGV	14	2000	330.0	12.4	6.8	4.0	1.6	8.0	12.0	Q1
SN74LVC07ADGVR1G4	TVSOP	DGV	14	2000	330.0	12.4	6.8	4.0	1.6	8.0	12.0	Q1
SN74LVC07ADR	SOIC	D	14	2500	330.0	16.4	6.5	9.0	2.1	8.0	16.0	Q1
SN74LVC07ADRG3	SOIC	D	14	2500	330.0	16.8	6.5	9.5	2.1	8.0	16.0	Q1
SN74LVC07ADRG4	SOIC	D	14	2500	330.0	16.4	6.5	9.0	2.1	8.0	16.0	Q1
SN74LVC07ADRG4	SOIC	D	14	2500	330.0	16.4	6.5	9.0	2.1	8.0	16.0	Q1
SN74LVC07ADT	SOIC	D	14	250	180.0	16.4	6.5	9.0	2.1	8.0	16.0	Q1
SN74LVC07ANSR	SOP	NS	14	2000	330.0	16.4	8.2	10.5	2.5	12.0	16.0	Q1
SN74LVC07APWR	TSSOP	PW	14	2000	330.0	12.4	6.9	5.6	1.6	8.0	12.0	Q1
SN74LVC07APWRG3	TSSOP	PW	14	2000	330.0	12.4	6.9	5.6	1.6	8.0	12.0	Q1
SN74LVC07APWRG4	TSSOP	PW	14	2000	330.0	12.4	6.9	5.6	1.6	8.0	12.0	Q1
SN74LVC07APWT	TSSOP	PW	14	250	330.0	12.4	6.9	5.6	1.6	8.0	12.0	Q1
SN74LVC07ARGYR	VQFN	RGY	14	3000	330.0	12.4	3.75	3.75	1.15	8.0	12.0	Q1

TAPE AND REEL BOX DIMENSIONS

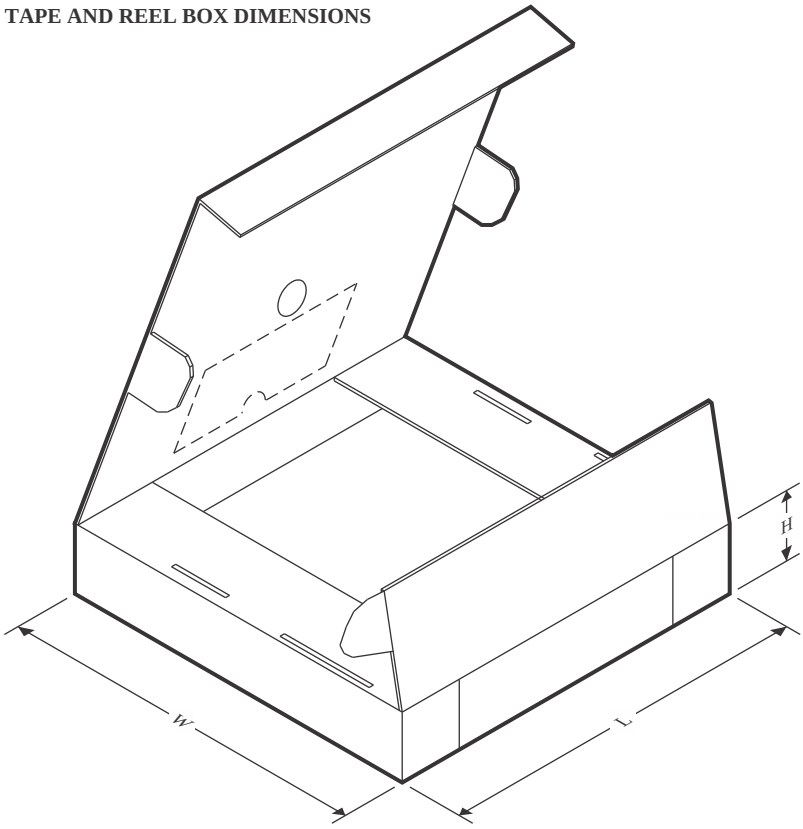

*All dimensions are nominal

Device	Package Type	Package Drawing	Pins	SPQ	Length (mm)	Width (mm)	Height (mm)
SN74LVC07ADBR	SSOP	DB	14	2000	356.0	356.0	35.0
SN74LVC07ADGVR	TVSOP	DGV	14	2000	356.0	356.0	35.0
SN74LVC07ADGVR1G4	TVSOP	DGV	14	2000	356.0	356.0	35.0
SN74LVC07ADR	SOIC	D	14	2500	353.0	353.0	32.0
SN74LVC07ADRG3	SOIC	D	14	2500	364.0	364.0	27.0
SN74LVC07ADRG4	SOIC	D	14	2500	340.5	336.1	32.0
SN74LVC07ADRG4	SOIC	D	14	2500	356.0	356.0	35.0
SN74LVC07ADT	SOIC	D	14	250	210.0	185.0	35.0
SN74LVC07ANSR	SOP	NS	14	2000	356.0	356.0	35.0
SN74LVC07APWR	TSSOP	PW	14	2000	356.0	356.0	35.0
SN74LVC07APWRG3	TSSOP	PW	14	2000	364.0	364.0	27.0
SN74LVC07APWRG4	TSSOP	PW	14	2000	356.0	356.0	35.0
SN74LVC07APWT	TSSOP	PW	14	250	356.0	356.0	35.0
SN74LVC07ARGYR	VQFN	RGY	14	3000	356.0	356.0	35.0

TUBE

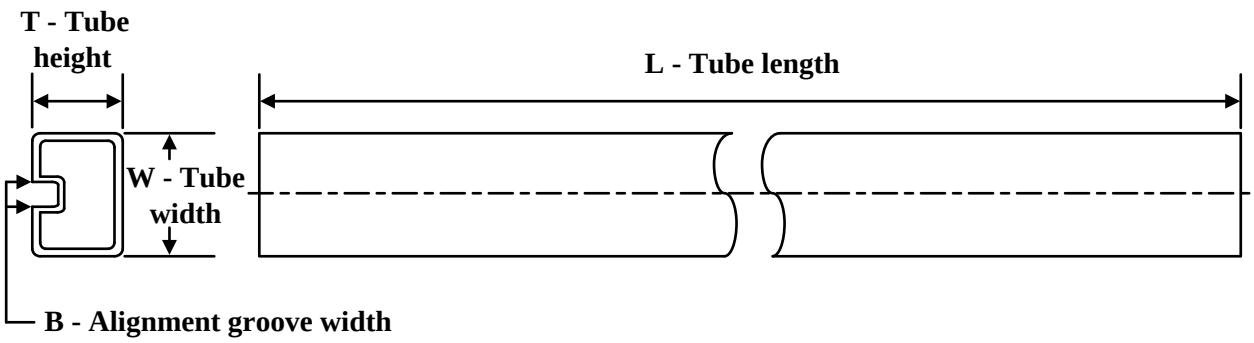

*All dimensions are nominal

Device	Package Name	Package Type	Pins	SPQ	L (mm)	W (mm)	T (µm)	B (mm)
SN74LVC07AD	D	SOIC	14	50	506.6	8	3940	4.32
SN74LVC07AD.B	D	SOIC	14	50	506.6	8	3940	4.32
SN74LVC07ADE4	D	SOIC	14	50	506.6	8	3940	4.32
SN74LVC07APW	PW	TSSOP	14	90	530	10.2	3600	3.5
SN74LVC07APW.B	PW	TSSOP	14	90	530	10.2	3600	3.5
SN74LVC07APWE4	PW	TSSOP	14	90	530	10.2	3600	3.5
SN74LVC07APWG4	PW	TSSOP	14	90	530	10.2	3600	3.5

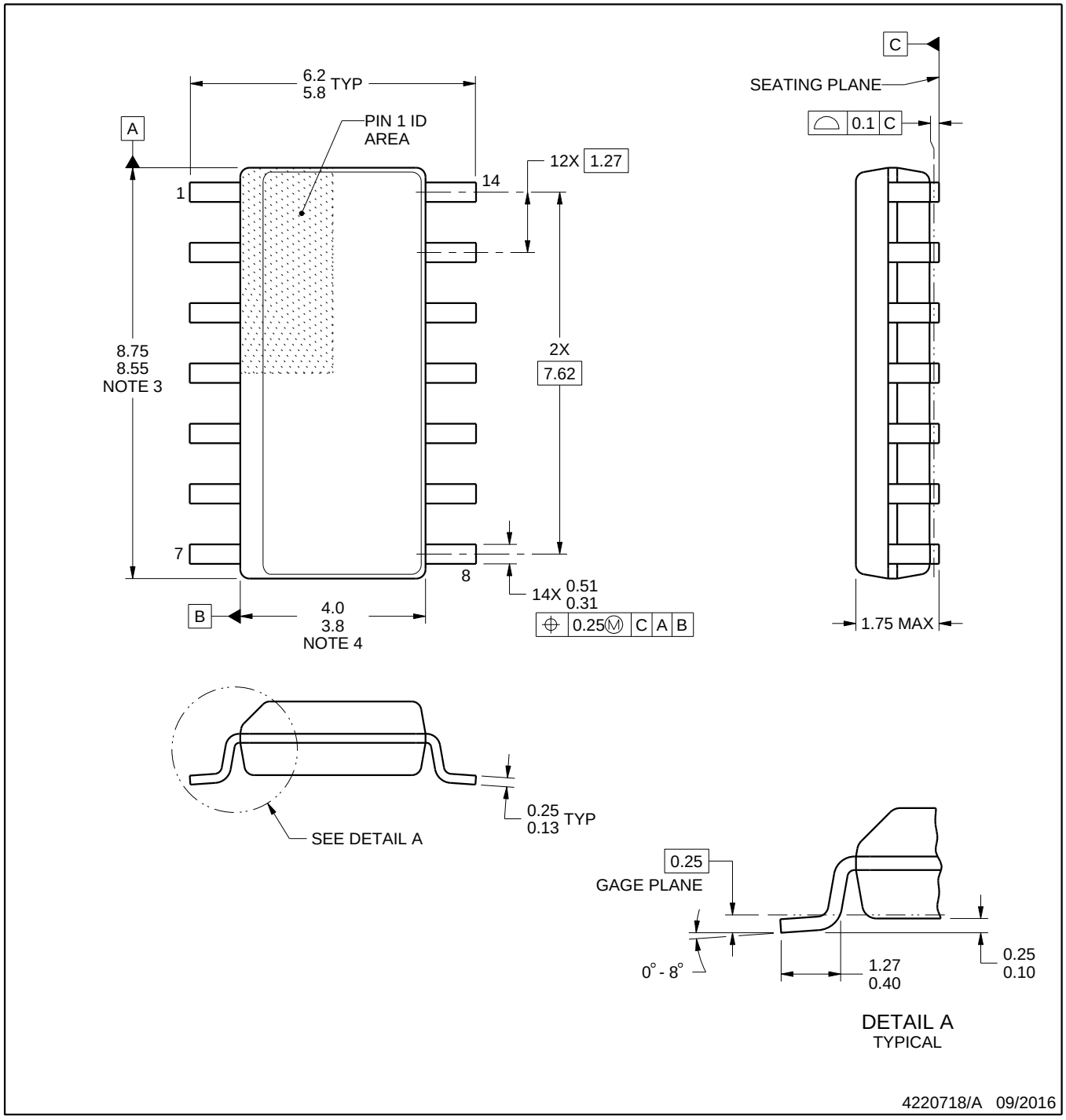

NOTES:

1. All linear dimensions are in millimeters. Dimensions in parenthesis are for reference only. Dimensioning and tolerancing per ASME Y14.5M.
2. This drawing is subject to change without notice.
3. This dimension does not include mold flash, protrusions, or gate burrs. Mold flash, protrusions, or gate burrs shall not exceed 0.15 mm, per side.
4. This dimension does not include interlead flash. Interlead flash shall not exceed 0.43 mm, per side.
5. Reference JEDEC registration MS-012, variation AB.

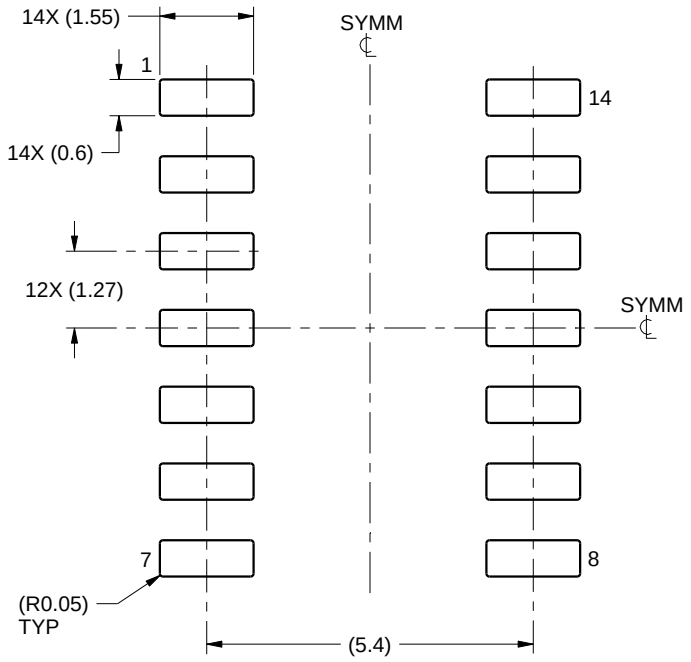

LAND PATTERN EXAMPLE
SCALE:8X

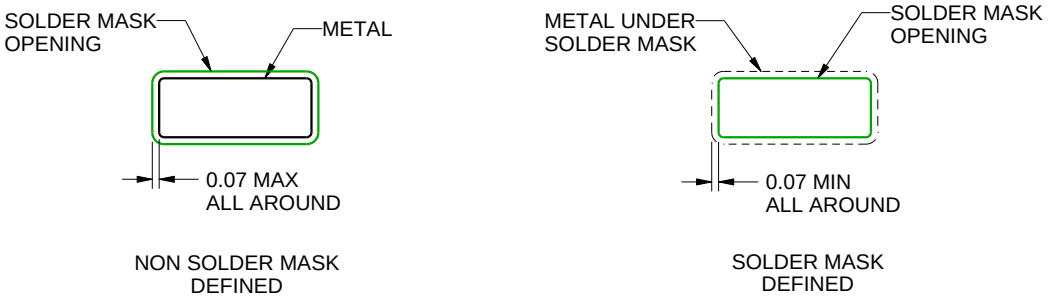

SOLDER MASK DETAILS

4220718/A 09/2016

NOTES: (continued)

6. Publication IPC-7351 may have alternate designs.
7. Solder mask tolerances between and around signal pads can vary based on board fabrication site.

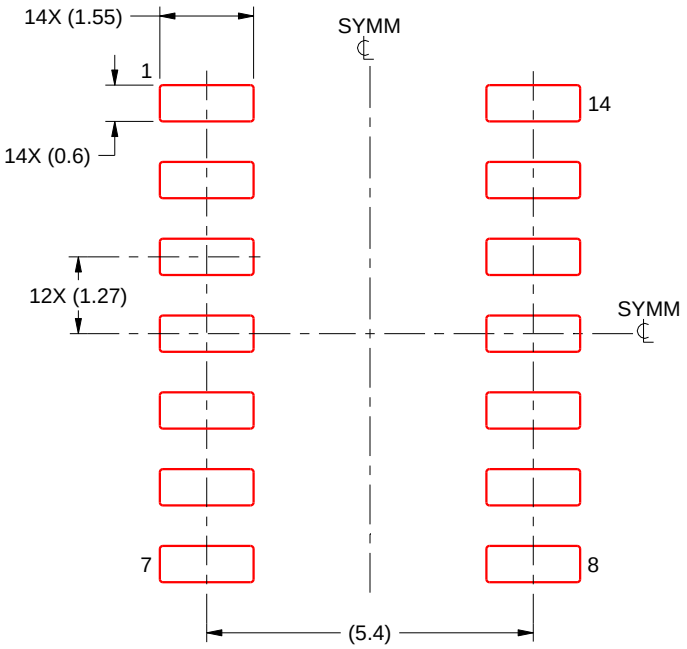

SOLDER PASTE EXAMPLE
BASED ON 0.125 mm THICK STENCIL
SCALE:8X

4220718/A 09/2016

NOTES: (continued)

8. Laser cutting apertures with trapezoidal walls and rounded corners may offer better paste release. IPC-7525 may have alternate design recommendations.
9. Board assembly site may have different recommendations for stencil design.

MECHANICAL DATA

NS (R-PDSO-G)** **PLASTIC SMALL-OUTLINE PACKAGE**

14-PINS SHOWN

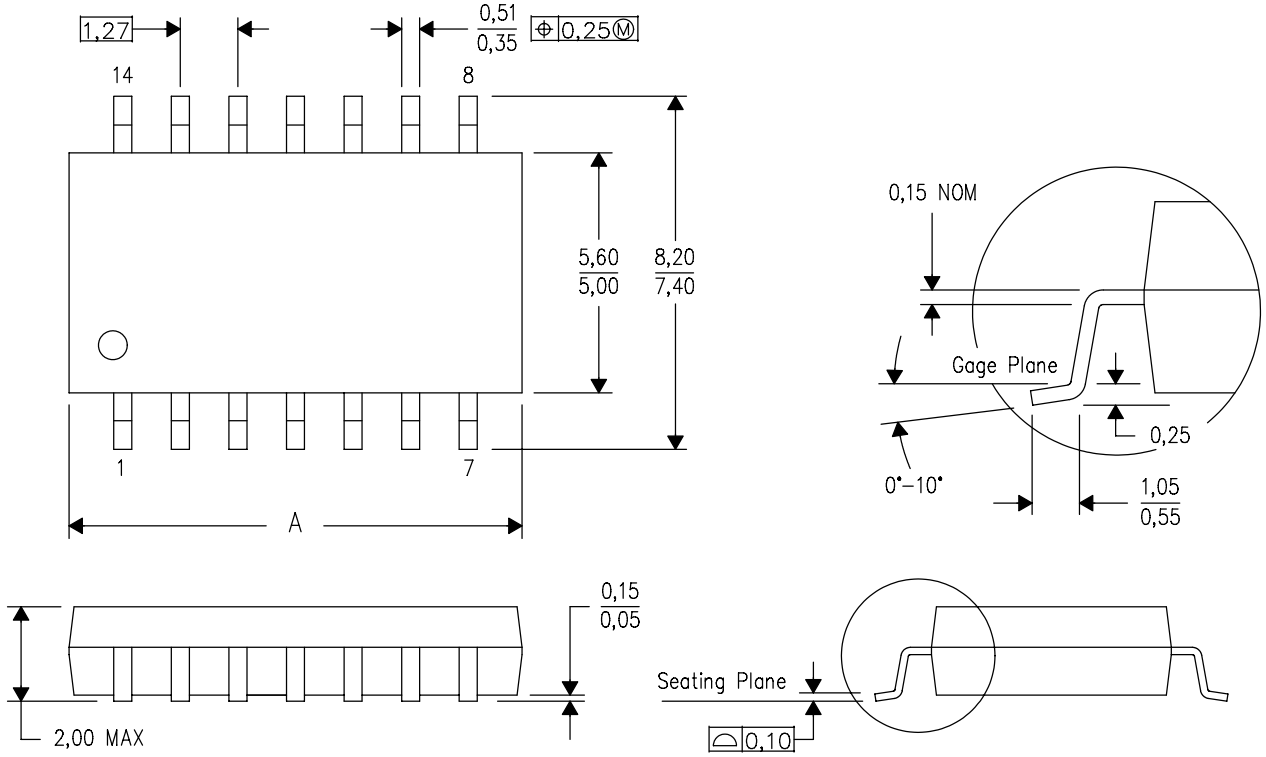

DIM \ PINS **	14	16	20	24
A MAX	10,50	10,50	12,90	15,30
A MIN	9,90	9,90	12,30	14,70

4040062/C 03/03

NOTES:
A. All linear dimensions are in millimeters.
B. This drawing is subject to change without notice.
C. Body dimensions do not include mold flash or protrusion, not to exceed 0,15.

DGV (R-PDSO-G)** **PLASTIC SMALL-OUTLINE**

24 PINS SHOWN

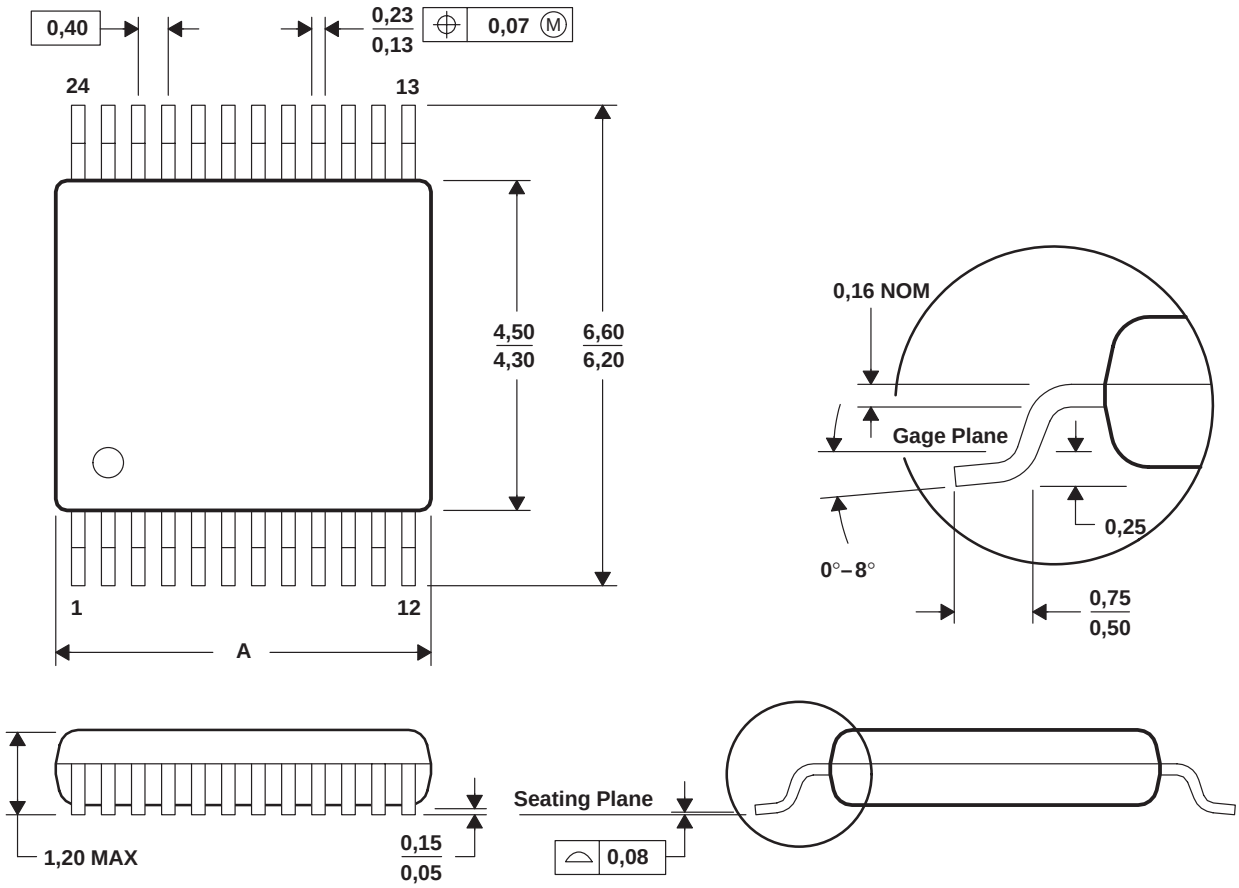

DIM \ PINS **	14	16	20	24	38	48	56
A MAX	3,70	3,70	5,10	5,10	7,90	9,80	11,40
A MIN	3,50	3,50	4,90	4,90	7,70	9,60	11,20

4073251/E 08/00

NOTES: A. All linear dimensions are in millimeters.
B. This drawing is subject to change without notice.
C. Body dimensions do not include mold flash or protrusion, not to exceed 0,15 per side.
D. Falls within JEDEC: 24/48 Pins – MO-153
14/16/20/56 Pins – MO-194

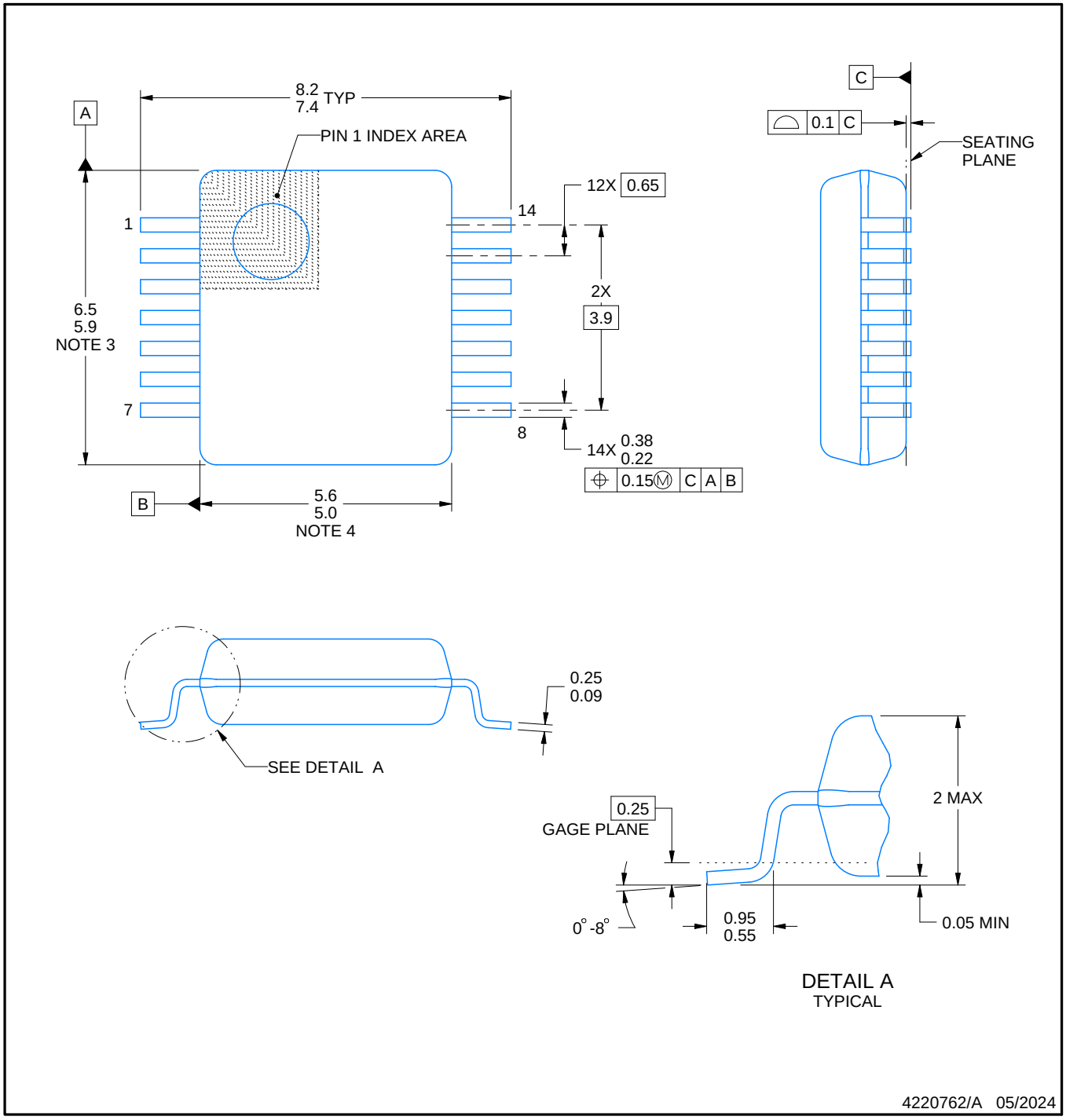

NOTES:

1. All linear dimensions are in millimeters. Any dimensions in parenthesis are for reference only. Dimensioning and tolerancing per ASME Y14.5M.
2. This drawing is subject to change without notice.
3. This dimension does not include mold flash, protrusions, or gate burrs. Mold flash, protrusions, or gate burrs shall not exceed 0.15 mm per side.
4. Reference JEDEC registration MO-150.

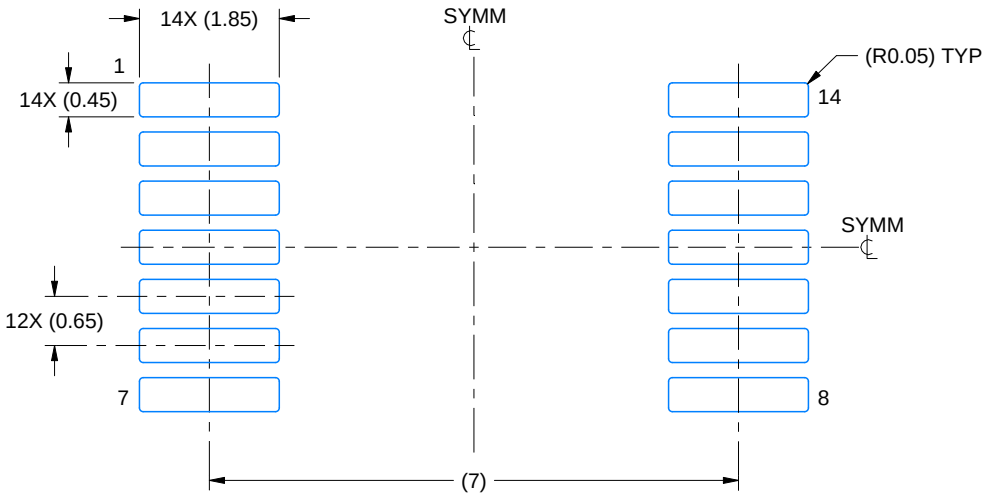

LAND PATTERN EXAMPLE
EXPOSED METAL SHOWN
SCALE: 10X

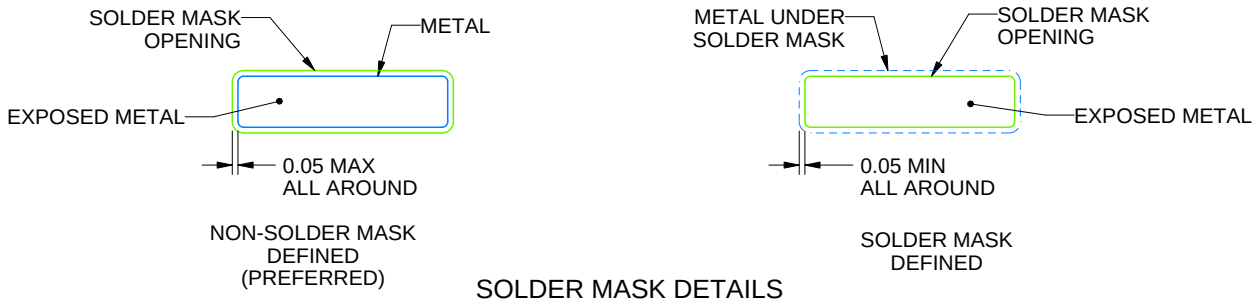

SOLDER MASK DETAILS

4220762/A 05/2024

NOTES: (continued)

5. Publication IPC-7351 may have alternate designs.
6. Solder mask tolerances between and around signal pads can vary based on board fabrication site.

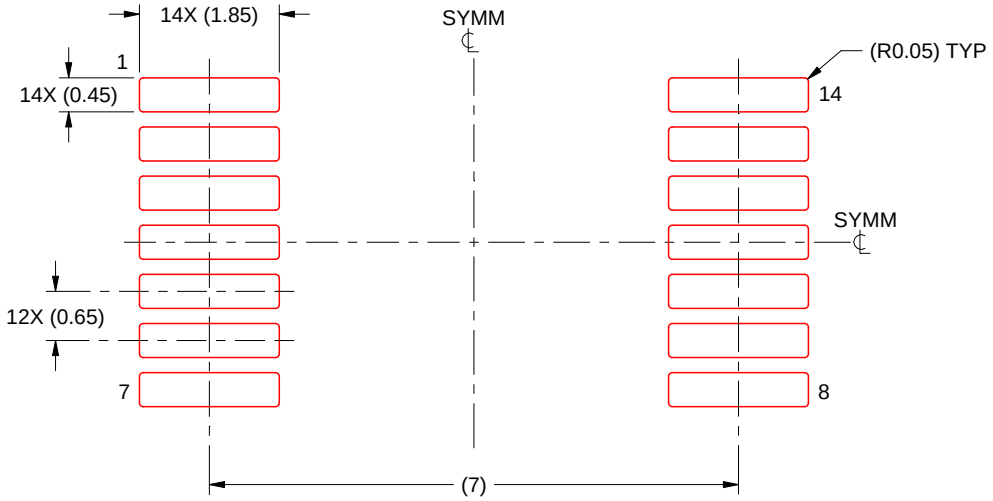

SOLDER PASTE EXAMPLE
BASED ON 0.125 mm THICK STENCIL
SCALE: 10X

4220762/A 05/2024

NOTES: (continued)

7. Laser cutting apertures with trapezoidal walls and rounded corners may offer better paste release. IPC-7525 may have alternate design recommendations.
8. Board assembly site may have different recommendations for stencil design.

PW0014A

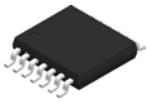

PACKAGE OUTLINE

TSSOP - 1.2 mm max height

SMALL OUTLINE PACKAGE

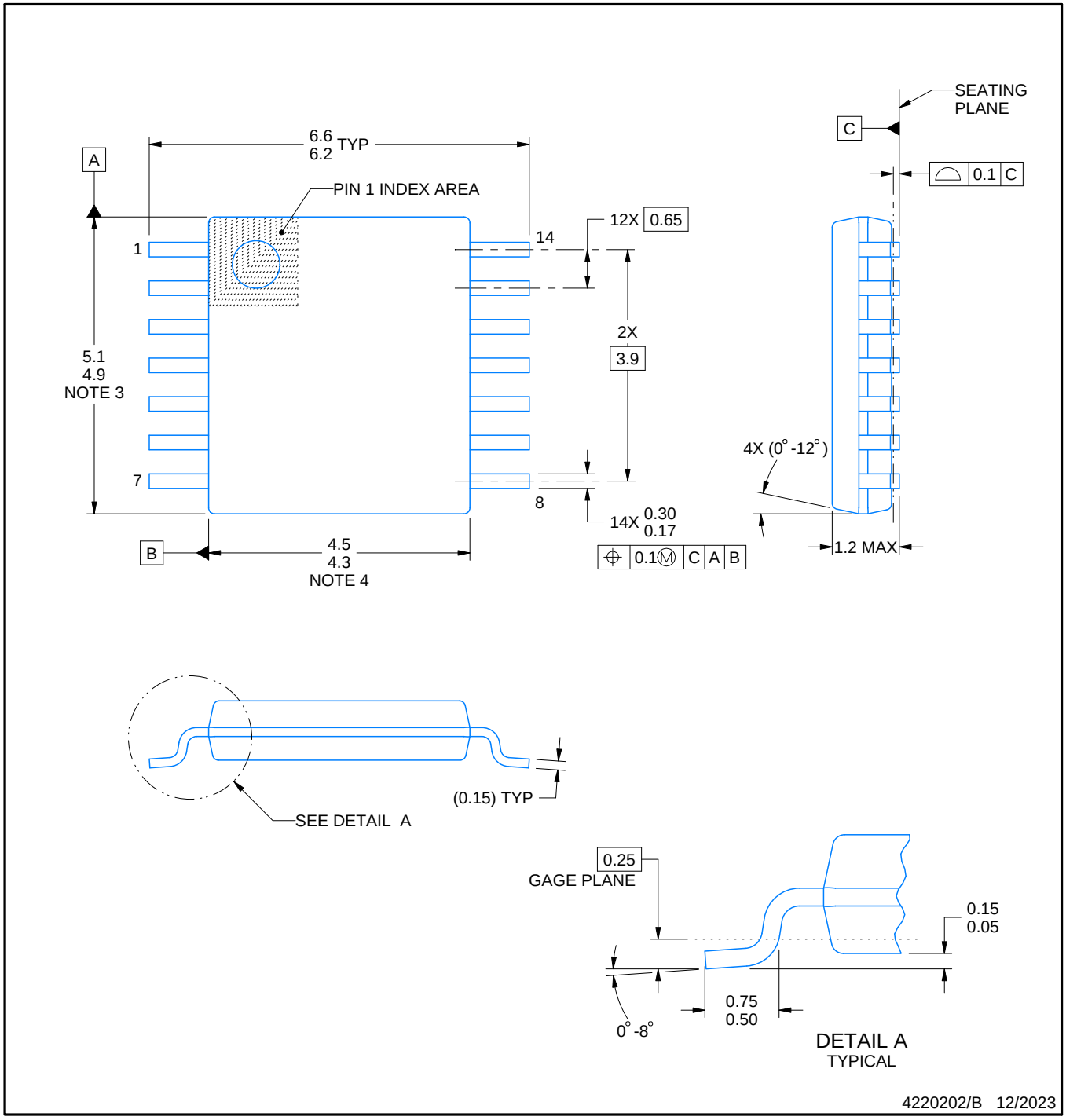

NOTES:

1. All linear dimensions are in millimeters. Any dimensions in parenthesis are for reference only. Dimensioning and tolerancing per ASME Y14.5M.
2. This drawing is subject to change without notice.
3. This dimension does not include mold flash, protrusions, or gate burrs. Mold flash, protrusions, or gate burrs shall not exceed 0.15 mm per side.
4. This dimension does not include interlead flash. Interlead flash shall not exceed 0.25 mm per side.
5. Reference JEDEC registration MO-153.

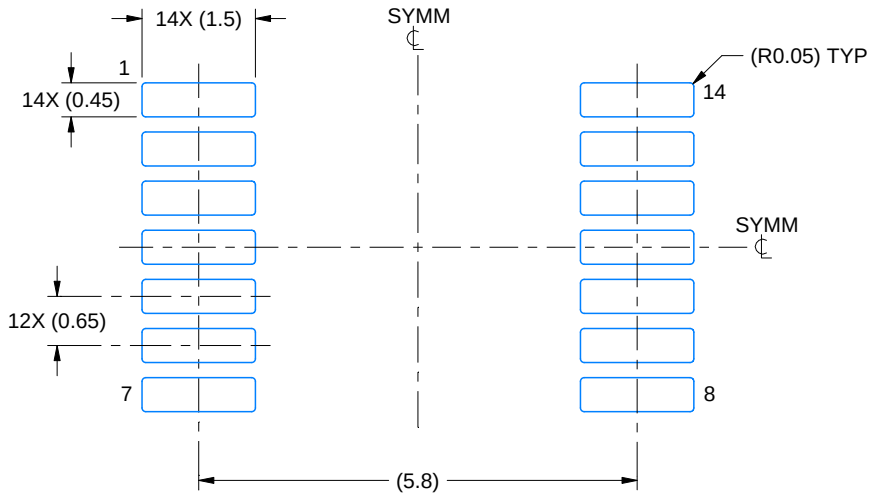

LAND PATTERN EXAMPLE
EXPOSED METAL SHOWN
SCALE: 10X

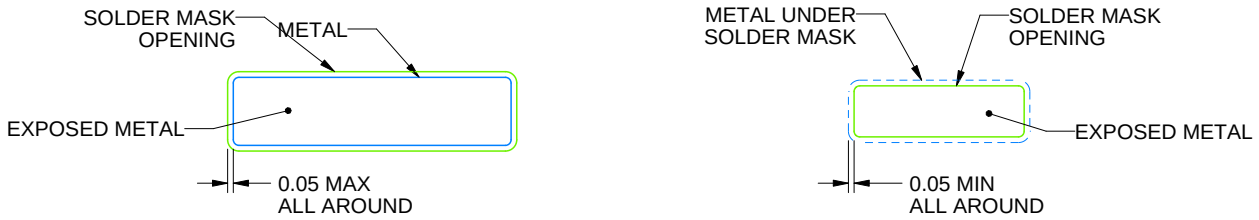

NON-SOLDER MASK DEFINED (PREFERRED)

SOLDER MASK DEFINED

SOLDER MASK DETAILS

4220202/B 12/2023

NOTES: (continued)

6. Publication IPC-7351 may have alternate designs.
7. Solder mask tolerances between and around signal pads can vary based on board fabrication site.

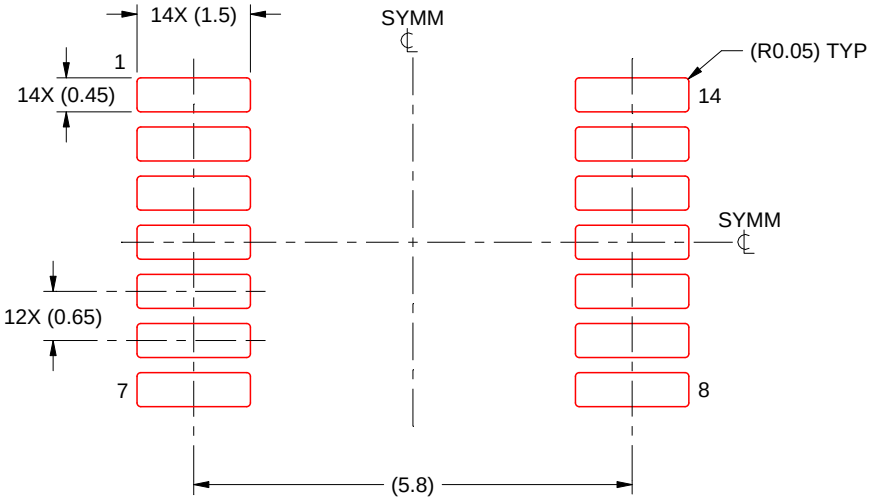

SOLDER PASTE EXAMPLE
BASED ON 0.125 mm THICK STENCIL
SCALE: 10X

4220202/B 12/2023

NOTES: (continued)

8. Laser cutting apertures with trapezoidal walls and rounded corners may offer better paste release. IPC-7525 may have alternate design recommendations.
9. Board assembly site may have different recommendations for stencil design.

GENERIC PACKAGE VIEW

RGY 14

VQFN - 1 mm max height

3.5 x 3.5, 0.5 mm pitch

PLASTIC QUAD FLATPACK - NO LEAD

This image is a representation of the package family, actual package may vary.
Refer to the product data sheet for package details.

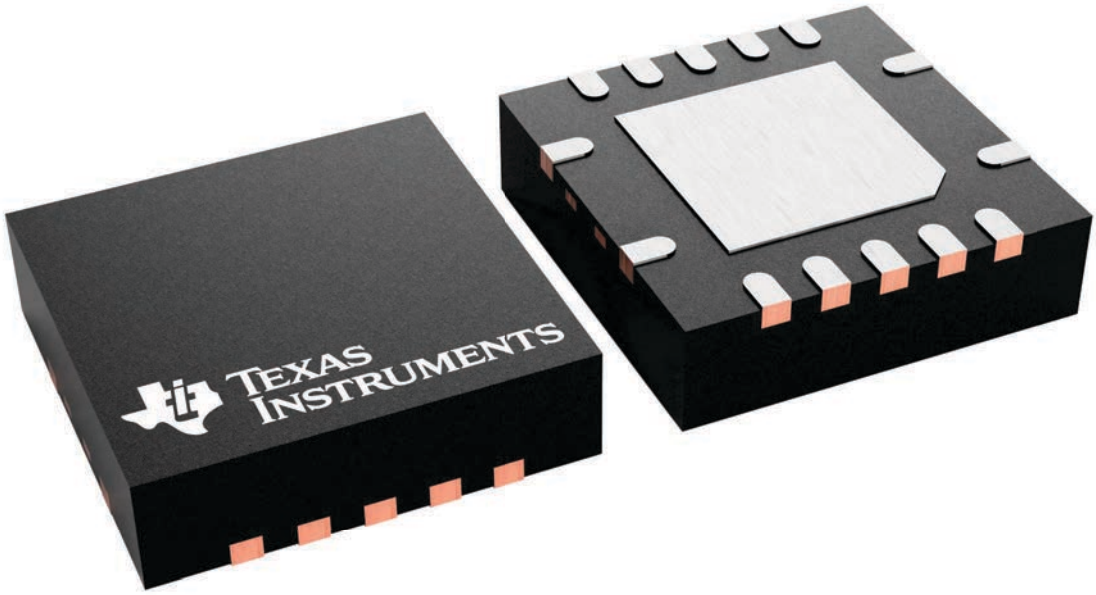

4231541/A

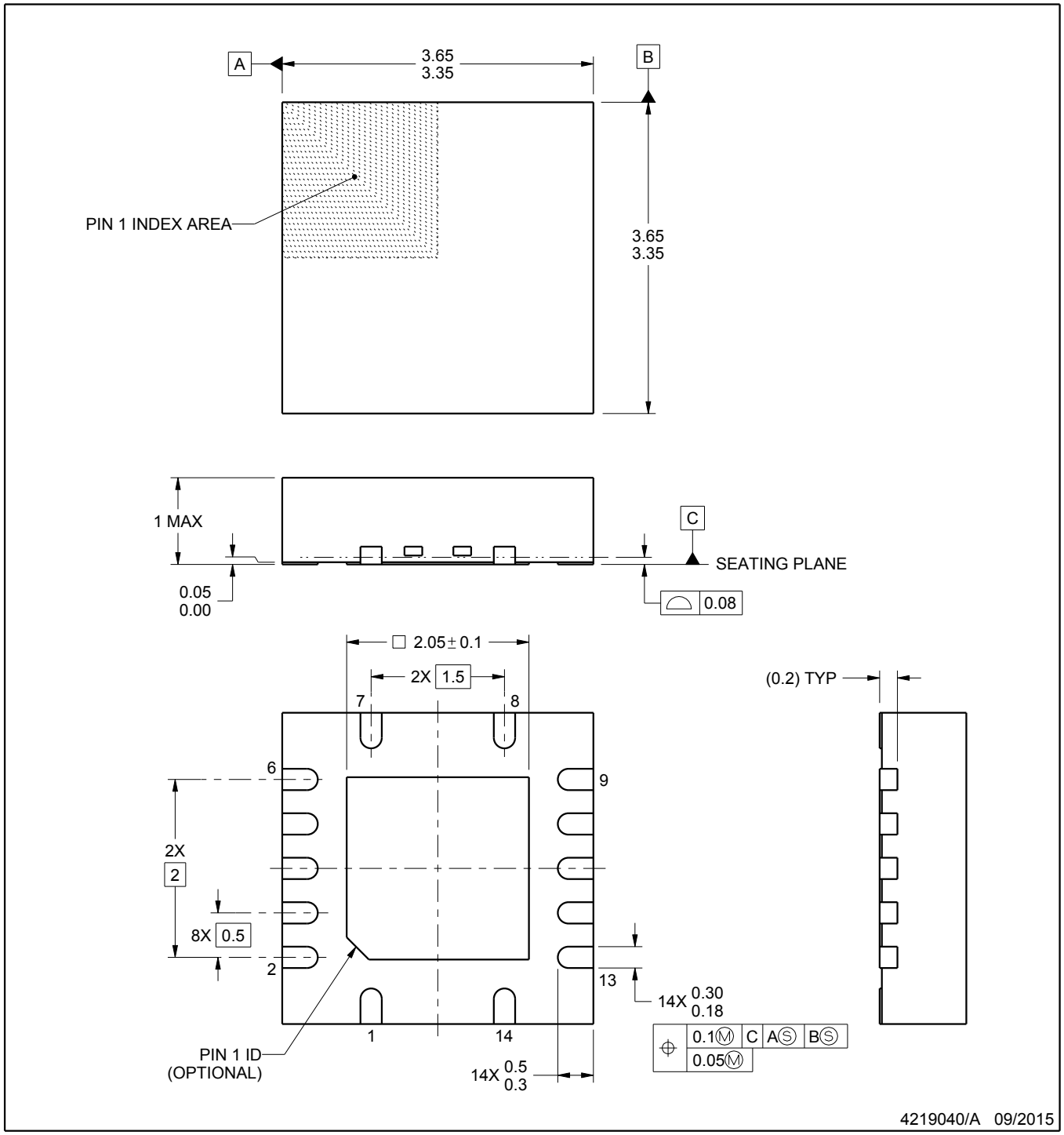

NOTES:

1. All linear dimensions are in millimeters. Any dimensions in parenthesis are for reference only. Dimensioning and tolerancing per ASME Y14.5M.
2. This drawing is subject to change without notice.
3. The package thermal pad must be soldered to the printed circuit board for thermal and mechanical performance.

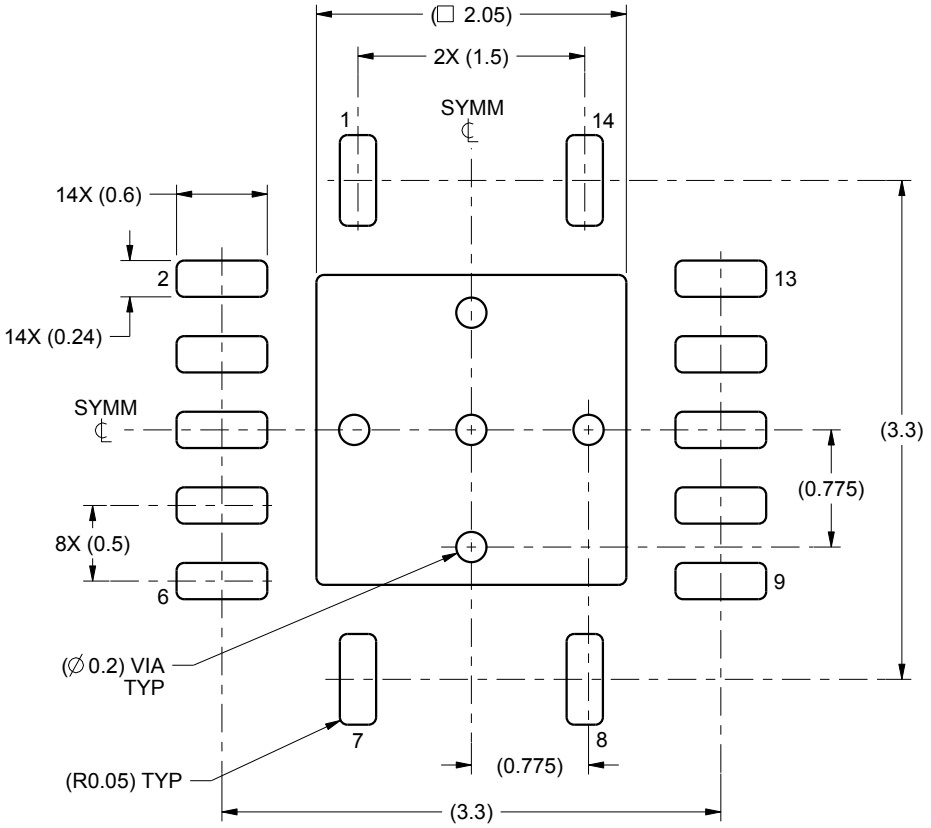

LAND PATTERN EXAMPLE
SCALE:20X

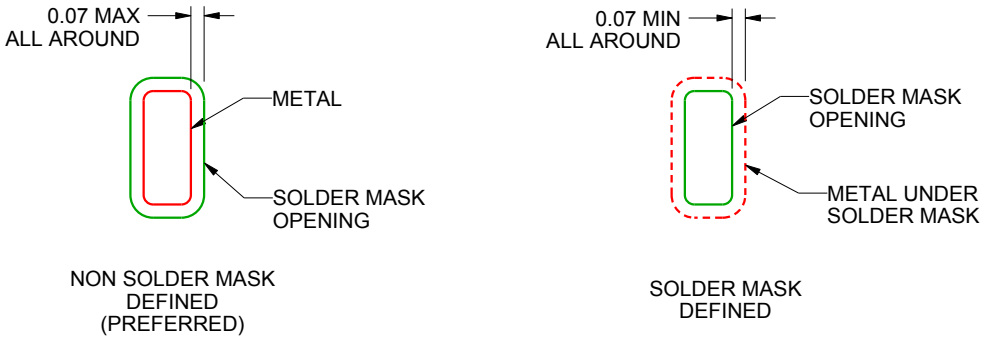

SOLDER MASK DETAILS

4219040/A 09/2015

NOTES: (continued)

4. This package is designed to be soldered to a thermal pad on the board. For more information, see Texas Instruments literature number SLUA271 (www.ti.com/lit/slua271).

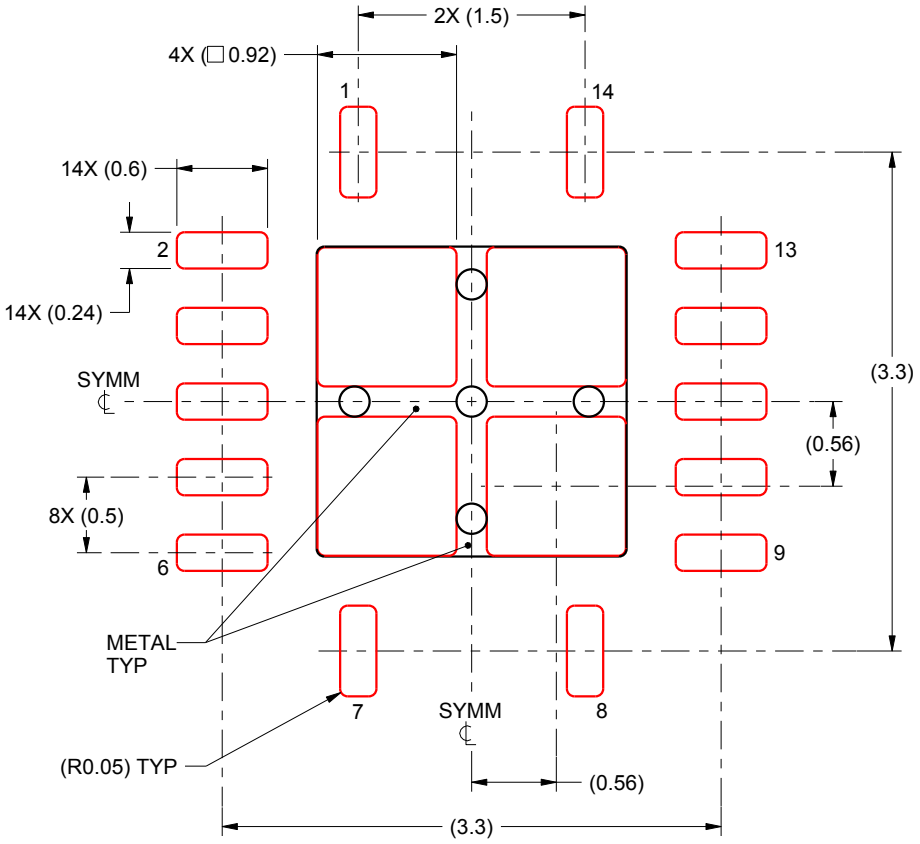

SOLDER PASTE EXAMPLE
BASED ON 0.125 mm THICK STENCIL

EXPOSED PAD
80% PRINTED SOLDER COVERAGE BY AREA
SCALE:20X

4219040/A 09/2015

NOTES: (continued)

5. Laser cutting apertures with trapezoidal walls and rounded corners may offer better paste release. IPC-7525 may have alternate design recommendations.

IMPORTANT NOTICE AND DISCLAIMER

TI PROVIDES TECHNICAL AND RELIABILITY DATA (INCLUDING DATA SHEETS), DESIGN RESOURCES (INCLUDING REFERENCE DESIGNS), APPLICATION OR OTHER DESIGN ADVICE, WEB TOOLS, SAFETY INFORMATION, AND OTHER RESOURCES “AS IS” AND WITH ALL FAULTS, AND DISCLAIMS ALL WARRANTIES, EXPRESS AND IMPLIED, INCLUDING WITHOUT LIMITATION ANY IMPLIED WARRANTIES OF MERCHANTABILITY, FITNESS FOR A PARTICULAR PURPOSE OR NON-INFRINGEMENT OF THIRD PARTY INTELLECTUAL PROPERTY RIGHTS.

These resources are intended for skilled developers designing with TI products. You are solely responsible for (1) selecting the appropriate TI products for your application, (2) designing, validating and testing your application, and (3) ensuring your application meets applicable standards, and any other safety, security, regulatory or other requirements.

These resources are subject to change without notice. TI grants you permission to use these resources only for development of an application that uses the TI products described in the resource. Other reproduction and display of these resources is prohibited. No license is granted to any other TI intellectual property right or to any third party intellectual property right. TI disclaims responsibility for, and you will fully indemnify TI and its representatives against, any claims, damages, costs, losses, and liabilities arising out of your use of these resources.

TI’s products are provided subject to TI’s Terms of Sale or other applicable terms available either on ti.com or provided in conjunction with such TI products. TI’s provision of these resources does not expand or otherwise alter TI’s applicable warranties or warranty disclaimers for TI products.

TI objects to and rejects any additional or different terms you may have proposed.

Mailing Address: Texas Instruments, Post Office Box 655303, Dallas, Texas 75265
Copyright © 2025, Texas Instruments Incorporated