UCC21520, UCC21520A 4A, 6A, 5.7kV$_{RMS}$ Isolated Dual-Channel Gate Drivers

1 Features

- Junction temperature range –40 to +150°C
- Switching parameters:
  - 33ns typical propagation delay
  - 20ns minimum pulse width
  - 6ns maximum pulse-width distortion
- Common-mode transient immunity (CMTI) greater than 125V/ns
- Surge immunity up to 10kV
- 4A peak source, 6A peak sink output
- 3V to 18V input VCCI range to interface with both digital and analog controllers
- Up to 25V VDD output drive supply
  - 5V and 8V VDD UVLO options
- Programmable overlap and dead time
- Fast disable for power sequencing
- Safety-related certifications (planned):
  - 8000V$_{PK}$ reinforced Isolation per DIN EN IEC 60747-17 (VDE 0884-17)
  - 5.7kV$_{RMS}$ isolation for 1 minute per UL 1577
  - CQC certification per GB4943.1-2022

2 Applications

- HEV and BEV battery chargers
- Isolated converters in DC-DC and AC-DC power supplies
- Server, telecom, it and industrial infrastructures
- Motor drive and DC-to-AC solar inverters
- LED lighting
- Inductive heating
- Uninterruptible power supply (UPS)

3 Description

The UCC21520 is an isolated dual-channel gate driver with 4A source and 6A sink peak current. It is designed to drive power MOSFETs, IGBTs, and SiC MOSFETs up to 5MHz.

The input side is isolated from the two output drivers by a 5.7kV$_{RMS}$ reinforced isolation barrier, with a minimum of 125V/ns common-mode transient immunity (CMTI). Internal functional isolation between the two secondary-side drivers allows a working voltage of up to 1500V$_{DC}$.

Every driver can be configured as two low-side drivers, two high-side drivers, or a half-bridge driver with programmable dead time (DT). A disable pin shuts down both outputs simultaneously when it is set high, and allows normal operation when left open or grounded. As a fail-safe measure, primary-side logic failures force both outputs low.

Each device accepts VDD supply voltages up to 25V. A wide input VCCI range from 3V to 18V makes the driver suitable for interfacing with both analog and digital controllers. All supply voltage pins have under voltage lock-out (UVLO) protection.

With all these advanced features, the UCC21520 enables high efficiency, high power density, and robustness.

Device Information

PART NUMBER	PACKAGE(1)	BODY SIZE (NOM)
UCC21520DW	DW (SOIC 16)	10.30mm × 7.50mm
UCC21520ADW	DW (SOIC 16)	10.30mm × 7.50mm

(1) For all available packages, see Section 14.

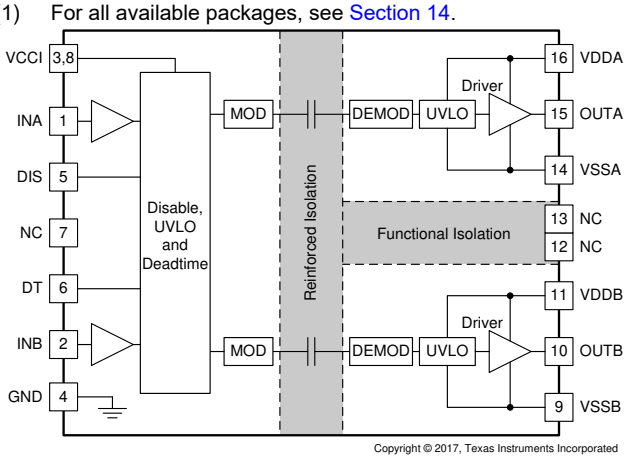

Functional Block Diagram

An IMPORTANT NOTICE at the end of this data sheet addresses availability, warranty, changes, use in safety-critical applications, intellectual property matters and other important disclaimers. PRODUCTION DATA.

Table of Contents

1 Features....1
2 Applications....1
3 Description....1
4 Description (continued)....3
5 Pin Configuration and Functions....4
6 Specifications....5
6.1 Absolute Maximum Ratings....5
6.2 ESD Ratings....5
6.3 Recommended Operating Conditions....5
6.4 Thermal Information....5
6.5 Power Ratings....6
6.6 Insulation Specifications....7
6.7 Safety Limiting Values....8
6.8 Electrical Characteristics....8
6.9 Timing Requirements....9
6.10 Switching Characteristics....9
6.11 Insulation Characteristics Curves....10
6.12 Typical Characteristics....11
7 Parameter Measurement Information....15
7.1 Propagation Delay and Pulse Width Distortion....15
7.2 Rising and Falling Time....15
7.3 Input and Disable Response Time....15
7.4 Programable Dead Time....16
7.5 Power-up UVLO Delay to OUTPUT....16
7.6 CMTI Testing....17
8 Detailed Description....18
8.1 Overview....18
8.2 Functional Block Diagram....18
8.3 Feature Description....19
8.4 Device Functional Modes....23
9 Application and Implementation....26
9.1 Application Information....26
9.2 Typical Application....26
10 Power Supply Recommendations....38
11 Layout....39
11.1 Layout Guidelines....39
11.2 Layout Example....40
12 Device and Documentation Support....42
12.1 Third-Party Products Disclaimer....42
12.2 Documentation Support....42
12.3 Certifications....42
12.4 Receiving Notification of Documentation Updates....42
12.5 Support Resources....42
12.6 Trademarks....42
12.7 Electrostatic Discharge Caution....42
12.8 Glossary....42
13 Revision History....42
14 Mechanical, Packaging, and Orderable Information....44

Copyright © 2024 Texas Instruments Incorporated

4 Description (continued)

Each device accepts VDD supply voltages up to 25 V. A wide input VCCI range from 3 V to 18 V makes the driver suitable for interfacing with both analog and digital controllers. All supply voltage pins have under voltage lock-out (UVLO) protection.

With all these advanced features, the UCC21520 and the UCC21520A enable high efficiency, high power density, and robustness in a wide variety of power applications.

Copyright © 2024 Texas Instruments Incorporated

5 Pin Configuration and Functions

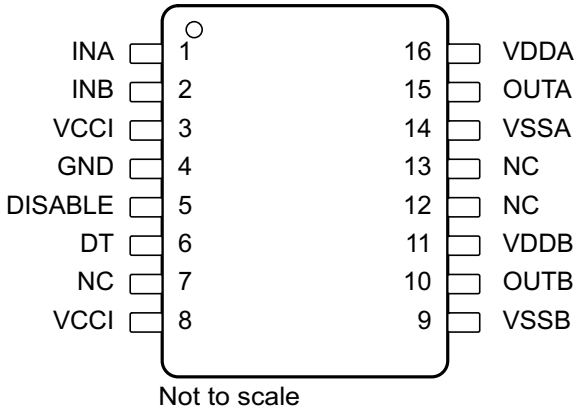

Figure 5-1. DW Package 16-Pin SOIC Top View

Table 5-1. Pin Functions

PIN		TYPE(1)	DESCRIPTION
NAME	NO.		
DISABLE	5	I	Disables both driver outputs if asserted high, enables if set low or left open. This pin is pulled low internally if left open. It is recommended to tie this pin to ground if not used to achieve better noise immunity. Bypass using a ≈1nF low ESR/ESL capacitor close to DIS pin when connecting to a micro controller with distance.
DT	6	I	Programmable dead time function. Tying DT to VCCI allows the outputs to overlap. Placing a 2-kΩ to 500-kΩ resistor (RDT) between DT and GND adjusts dead time according to: DT (in ns) = 10 x R_{DT} (in kΩ). It is recommended to parallel a ceramic capacitor, ≤1nF, close to the DT pin with R_{DT} to achieve better noise immunity. It is not recommended to leave DT floating.
GND	4	P	Primary-side ground reference. All signals in the primary side are referenced to this ground.
INA	1	I	Input signal for A channel. INA input has a TTL/CMOS compatible input threshold. This pin is pulled low internally if left open. It is recommended to tie this pin to ground if not used to achieve better noise immunity.
INB	2	I	Input signal for B channel. INB input has a TTL/CMOS compatible input threshold. This pin is pulled low internally if left open. It is recommended to tie this pin to ground if not used to achieve better noise immunity.
NC	7	–	No Internal connection.
NC	12	–	No internal connection.
NC	13	–	No internal connection.
OUTA	15	O	Output of driver A. Connect to the gate of the A channel FET or IGBT.
OUTB	10	O	Output of driver B. Connect to the gate of the B channel FET or IGBT.
VCCI	3	P	Primary-side supply voltage. Locally decoupled to GND using a low ESR/ESL capacitor located as close to the device as possible.
VCCI	8	P	Primary-side supply voltage. This pin is internally shorted to pin 3.
VDDA	16	P	Secondary-side power for driver A. Locally decoupled to VSSA using a low ESR/ESL capacitor located as close to the device as possible.
VDDB	11	P	Secondary-side power for driver B. Locally decoupled to VSSB using low ESR/ESL capacitor located as close to the device as possible.
VSSA	14	P	Ground for secondary-side driver A. Ground reference for secondary side A channel.
VSSB	9	P	Ground for secondary-side driver B. Ground reference for secondary side B channel.

(1) P = Power, G = Ground, I = Input, O = Output

Copyright © 2024 Texas Instruments Incorporated

6 Specifications

6.1 Absolute Maximum Ratings

over operating free-air temperature range (unless otherwise noted)[1]

		MIN	MAX	UNIT
Input bias pin supply voltage	VCCI to GND	–0.3	20	V
Driver bias supply	VDDA-VSSA, VDDB-VSSB	–0.3	30	V
Output signal voltage	OUTA to VSSA, OUTB to VSSB	–0.3	VDDA/B + 0.3	V
	OUTA to VSSA, OUTB to VSSB, Transient for 200 ns	–2	VDDA/B + 0.3	V
Input signal voltage	INA, INB, DIS, DT to GND	–0.3	VCCI + 0.3	V
	INA, INB Transient for 50ns	–5	VCCI + 0.3	V
Channel to channel voltage	VSSA-VSSB, VSSB-VSSA		1500	V
Junction temperature, T_J [2]		–40	150	℃
Storage temperature, T_{stg}		–65	150	℃

(1) Stresses beyond those listed under *Absolute Maximum Rating* may cause permanent damage to the device. These are stress ratings only, which do not imply functional operation of the device at these or any other conditions beyond those indicated under *Recommended Operating Condition*. Exposure to absolute-maximum-rated conditions for extended periods may affect device reliability.
(2) To maintain the recommended operating conditions for TJ, see the Section 6.4

6.2 ESD Ratings

			VALUE	UNIT
$V_{(ESD)}$	Electrostatic discharge	Human body model (HBM), per ANSI/ESDA/JEDEC JS-001[1]	±2000	V
		Charged device model (CDM), per JEDEC specification JESD22-C101[2]	±1000	

(1) JEDEC document JEP155 states that 500-V HBM allows safe manufacturing with a standard ESD control process.
(2) JEDEC document JEP157 states that 250-V CDM allows safe manufacturing with a standard ESD control process.

6.3 Recommended Operating Conditions

over operating free-air temperature range (unless otherwise noted)

			MIN	MAX	UNIT
V_{CCI}	VCCI Input supply voltage		3	18	V
VDDA, VDDB	Driver output bias supply	UCC21520A 5-V UVLO version	6.5	25	V
VDDA, VDDB	Driver output bias supply	UCC21520 8-V UVLO version	9.2	25	V
T_J	Junction temperature		–40	150	℃

6.4 Thermal Information

THERMAL METRIC[1]		UCC21520 DW-16 (SOIC)	UNIT
$R_{\theta JA}$	Junction-to-ambient thermal resistance	69.8	°C/W
$R_{\theta JC(top)}$	Junction-to-case (top) thermal resistance	33.1	°C/W
$R_{\theta JB}$	Junction-to-board thermal resistance	36.9	°C/W
Ψ_{JT}	Junction-to-top(center) characterization parameter	22.2	°C/W
Ψ_{JB}	Junction-to-board characterization parameter	36	°C/W

(1) For more information about traditional and new thermal metrics, see the Semiconductor and IC Package Thermal Metrics application report.

6.5 Power Ratings

PARAMETER		TEST CONDITIONS	MIN	TYP	MAX	UNIT
P_D	Maximum power dissipation (both sides)	VCCI = 5V, VDDA/VDDB = 20V, INA/B = 3.3V, 460kHz 50% duty cycle square wave, CL=2.2nF, T_J=150℃, T_A=25℃			950	mW
P_{DI}	Maximum power dissipation by transmitter side				50	mW
P_{DA}, P_{DB}	Maximum power dissipation by each driver side				450	mW

Copyright © 2024 Texas Instruments Incorporated

6.6 Insulation Specifications

PARAMETER		TEST CONDITIONS	SPECIFICATION	UNIT
General				
CLR	External clearance(1)	Shortest terminal-to-terminal distance through air	>8	mm
CPG	External Creepage(1)	Shortest terminal-to-terminal distance across the package surface	>8	mm
DTI	Distance through the insulation	Minimum internal gap (internal clearance)	>17	µm
CTI	Comparative tracking index	DIN EN 60112 (VDE 0303-11); IEC 60112	> 600	V
	Material Group	According to IEC 60664-1	I	
	Overvoltage category IEC 60664-1	Rated mains voltage ≤ 600 V_{RMS}	I-IV	
		Rated mains voltage ≤ 1000 V_{RMS}	I-III	
DIN EN IEC 60747-17 (VDE 0884-17) (2)				
V_{IORM}	Maximum repetitive peak isolation voltage	AC voltage (bipolar)	2121	V_{PK}
V_{IOWM}	Maximum isolation working voltage	AC voltage (sine wave); time-dependent dielectric breakdown (TDDB) test	1500	V_{RMS}
		DC voltage	2121	V_{DC}
V_{IMP}	Maximum inpulse voltage	Tested in air, 1.2/50-µs waveform per IEC 62368-1	7692	V_{PK}
V_{IOTM}	Maximum transient isolation voltage	$V_{TEST} = V_{IOTM}$, t = 60 s (qualification) $V_{TEST} = 1.2 \times V_{IOTM}$, t = 1 s (100% production)	8000	V_{PK}
V_{IOSM}	Maximum surge isolation voltage(3)	$V_{IOSM} \geq 1.3 \times V_{IMP}$; Tested in oil (qualification test), 1.2/50-µs waveform per IEC 62368-1	10000	V_{PK}
q_{pd}	Apparent charge(4)	Method a: After I/O safety test subgroup 2/3, $V_{ini} = V_{IOTM}$, t_{ini} = 60 s; $V_{pd(m)} = 1.2 \times V_{IORM}$, t_m = 10 s	≤5	pC
		Method a: After environmental tests subgroup 1, $V_{ini} = V_{IOTM}$, t_{ini} = 60 s; $V_{pd(m)} = 1.6 \times V_{IORM}$, t_m = 10 s	≤5	
		Method b1: At routine test (100% production) and preconditioning (type test), $V_{ini} = 1.2 \times V_{IOTM}$, t_{ini} = 1 s; $V_{pd(m)} = 1.875 \times V_{IORM}$, t_m = 1 s	≤5	
C_{IO}	Barrier capacitance, input to output(5)	$V_{IO} = 0.4 \times \sin(2\pi ft)$, f = 1 MHz	~1.2	pF
R_{IO}	Insulation resistance, input to output(5)	V_{IO} = 500 V, T_A = 25°C	$>10^{12}$	Ω
		V_{IO} = 500 V, 100°C ≤ T_A ≤ 125°C	$>10^{11}$	
		V_{IO} = 500 V at T_S = 150°C	$>10^{9}$	
	Pollution degree		2	
	Climatic category		40/125/21	
UL 1577				
V_{ISO}	Withstand isolation voltage	$V_{TEST} = V_{ISO}$ = 5700 V_{RMS}, t = 60 s (qualification), $V_{TEST} = 1.2 \times V_{ISO}$ = 6840 V_{RMS}, t = 1 s (100% production)	5700	V_{RMS}

(1) Creepage and clearance requirements should be applied according to the specific equipment isolation standards of an application. Care should be taken to maintain the creepage and clearance distance of a board design to ensure that the mounting pads of the isolator on the printed-circuit board do not reduce this distance. Creepage and clearance on a printed-circuit board become equal in certain cases. Techniques such as inserting grooves, ribs, or both on a printed-circuit board are used to help increase these specifications.
(2) This coupler is suitable for *safe electrical insulation* only within the safety ratings. Compliance with the safety ratings shall be ensured by means of suitable protective circuits.
(3) Testing is carried out in air or oil to determine the intrinsic surge immunity of the isolation barrier.
(4) Apparent charge is electrical discharge caused by a partial discharge (pd).
(5) All pins on each side of the barrier tied together creating a two-pin device.

Copyright © 2024 Texas Instruments Incorporated

6.7 Safety Limiting Values

PARAMETER		TEST CONDITIONS	SIDE	MIN	TYP	MAX	UNIT
I_S	Safety output supply current	$R_{\theta\ JA}$ = 69.8°C/W, $V_{DDA/B}$ = 15 V, T_J = 150°C, T_A = 25°C	DRIVER A, DRIVER B			58	mA
		$R_{\theta\ JA}$ = 69.8°C/W, $V_{DDA/B}$ = 25 V, T_J = 150°C, T_A = 25°C				34	
P_S	Safety supply power	$R_{\theta\ JA}$ = 69.8°C/W, T_J = 150°C, T_A = 25°C	INPUT			50	mW
			DRIVER A			870	
			DRIVER B			870	
			TOTAL			1790	
T_S	Maximum safety temperature(1)					150	°C

(1) The maximum safety temperature, T_S, has the same value as the maximum junction temperature, T_J , specified for the device. The I_S and P_S parameters represent the safety current and safety power respectively. The maximum limits of I_S and P_S should not be exceeded. These limits vary with the ambient temperature, T_A. The junction-to-air thermal resistance, R_{qJA}, in the Thermal Information table is that of a device installed on a high-K test board for leaded surface-mount packages. Use these equations to calculate the value for each parameter: $T_J = T_A + R_{qJA} \times P$, where P is the power dissipated in the device. $T_{J(max)} = T_S = T_A + R_{qJA} \times P_S$, where $T_{J(max)}$ is the maximum allowed junction temperature. $P_S = I_S \times V_I$, where VI is the maximum supply voltage.

6.8 Electrical Characteristics

V_{VCCI} = 3.3 V or 5 V, 0.1-µF capacitor from VCCI to GND, V_{VDDA} = V_{VDDB} = 15 V, 1-µF capacitor from VDDA and VDDB to VSSA and VSSB, T_J = –40°C to +150°C, unless otherwise noted

PARAMETER		TEST CONDITIONS	MIN	TYP	MAX	UNIT
SUPPLY CURRENTS						
I_{VCCI}	VCCI quiescent current	V_{INA} = 0 V, V_{INB} = 0 V		1.4	2.0	mA
I_{VDDA}, I_{VDDB}	VDDA and VDDB quiescent current	V_{INA} = 0 V, V_{INB} = 0 V		1.0	2.5	mA
I_{VCCI}	VCCI operating current	(f = 500 kHz) current per channel		3	3.5	mA
I_{VDDA}, I_{VDDB}	VDDA and VDDB operating current	(f = 500 kHz) current per channel, C_{OUT} = 100 pF		2.5	4.2	mA
VCC SUPPLY VOLTAGE UNDERVOLTAGE THRESHOLDS						
V_{VCCI_ON}	UVLO Rising threshold		2.55	2.7	2.85	V
V_{VCCI_OFF}	UVLO Falling threshold		2.35	2.5	2.65	V
V_{VCCI_HYS}	UVLO Threshold hysteresis			0.2		V
VDD SUPPLY VOLTAGE UNDERVOLTAGE THRESHOLDS						
V_{VDDA_ON}, V_{VDDB_ON}	UVLO Rising threshold	5-V UVLO	5.7	6.0	6.3	V
V_{VDDA_OFF}, V_{VDDB_OFF}	UVLO Falling threshold	5-V UVLO	5.4	5.7	6.0	V
V_{VDDA_HYS}, V_{VDDB_HYS}	UVLO Threshold hysteresis	5-V UVLO		0.3		V
V_{VDDA_ON}, V_{VDDB_ON}	UVLO Rising threshold	8-V UVLO	7.7	8.5	8.9	V
V_{VDDA_OFF}, V_{VDDB_OFF}	UVLO Falling threshold	8-V UVLO	7.2	7.9	8.4	V
V_{VDDA_HYS}, V_{VDDB_HYS}	UVLO Threshold hysteresis	8-V UVLO		0.6		V
INA, INB AND ENABLE						
V_{INAH}, V_{INBH}, V_{ENH}	Input high threshold voltage		1.2	1.8	2	V
V_{INAL}, V_{INBL}, V_{ENL}	Input low threshold voltage		0.8	1	1.2	V
V_{INA_HYS}, V_{INB_HYS}, V_{EN_HYS}	Input threshold hysteresis			0.8		V
V_{INA}, V_{INB}	Negative transient, ref to GND, 100 ns pulse	Not production tested, bench test only	–5			V
OUTPUT						

Copyright © 2024 Texas Instruments Incorporated

6.8 Electrical Characteristics (continued)

V_{VCCI} = 3.3 V or 5 V, 0.1-µF capacitor from VCCI to GND, V_{VDDA} = V_{VDDB} = 15 V, 1-µF capacitor from VDDA and VDDB to VSSA and VSSB, T_J = –40°C to +150°C, unless otherwise noted

PARAMETER		TEST CONDITIONS	MIN	TYP	MAX	UNIT
I_{OA+}, I_{OB+}	Peak output source current	C_{VDD} = 10 µF, C_{LOAD} = 0.18 µF, f = 1 kHz, bench measurement		4		A
I_{OA-}, I_{OB-}	Peak output sink current	C_{VDD} = 10 µF, C_{LOAD} = 0.18 µF, f = 1 kHz, bench measurement		6		A
R_{OHA}, R_{OHB}	Output resistance at high state	I_{OUT} = –10 mA, T_A = 25°C, R_{OHA}, R_{OHB} do not represent drive pull-up performance. See t_{RISE} in Section 6.10 and Section 8.3.4 for details.		5		Ω
R_{OLA}, R_{OLB}	Output resistance at low state	I_{OUT} = 10 mA, T_A = 25°C		0.55		Ω
V_{OHA}, V_{OHB}	Output voltage at high state	V_{VDDA}, V_{VDDB} = 15 V, I_{OUT} = –10 mA, T_A = 25°C		14.95		V
V_{OLA}, V_{OLB}	Output voltage at low state	V_{VDDA}, V_{VDDB} = 15 V, I_{OUT} = 10 mA, T_A = 25°C		5.5		mV

6.9 Timing Requirements

DEADTIME AND OVERLAP PROGRAMMING		MIN	NOM	MAX	UNIT
DT	DT pin tied to VCCI	Ovelap determined by INA, INB	Ovelap determined by INA, INB	Ovelap determined by INA, INB	ns
DT	Dead time, R_{DT} = 10 kΩ	80	100	120	ns
DT	Dead time, R_{DT} = 20 kΩ	160	200	240	ns
DT	Dead time, R_{DT} = 50 kΩ	400	500	600	ns

6.10 Switching Characteristics

V_{VCCI} = 3.3 V or 5 V, 0.1-µF capacitor from VCCI to GND, V_{VDDA} = V_{VDDB} = 12 V, 1-µF capacitor from VDDA and VDDB to VSSA and VSSB, load capacitance C_{OUT} = 0 pF, T_J = –40°C to +150°C. (over recommended operating conditions unless otherwise noted)

PARAMETER		TEST CONDITIONS	MIN	TYP	MAX	UNIT
t_{RISE}	Output rise time, 20% to 80% measured points	C_{OUT} = 1.8 nF		6	16	ns
t_{FALL}	Output fall time, 90% to 10% measured points	C_{OUT} = 1.8 nF		7	12	ns
t_{PWmin}	Minimum pulse width	Output off for less than minimum, C_{OUT} = 0pF			20	ns
t_{PDHL}	Propagation delay from INx to OUTx falling edges		26	33	45	ns
t_{PDLH}	Propagation delay from INx to OUTx rising edges		26	33	45	ns
t_{PWD}	Pulse width distortion $\lvert t_{PDLH} – t_{PDHL}\rvert$				6	ns
t_{DM}	Propagation Delay Matching for Dual Channel Driver	Input Pulse Width = 100ns, 500kHz, T_J = -40°C to -10°C $\lvert t_{PDLHA} – t_{PDLHB}\rvert$, $\lvert t_{PDHLA} – t_{PDHLB}\rvert$			6.5	ns
t_{DM}	Propagation Delay Matching for Dual Channel Driver	Input Pulse Width = 100ns, 500kHz, T_J = -10°C to +150°C $\lvert t_{PDLHA} – t_{PDLHB}\rvert$, $\lvert t_{PDHLA} – t_{PDHLB}\rvert$			5	ns
t_{VCCI+} to OUT	VCCI Power-up Delay Time: UVLO Rise to OUTA, OUTB	INA or INB tied to VCCI			50	µs
t_{VDD+} to OUT	VDDA. VDDB Power-up Delay Time: UVLO Rise to OUTA, OUTB	INA or INB tied to VCCI			10	µs
$\lvert CM_H\rvert$	High-level common-mode transient immunity (See Section 7.6)	Slew rate of GND versus VSSA/B, INA and INB both are tied to GND or VCCI; V_{CM} = 1500V	125			V/ns
$\lvert CM_L\rvert$	Low-level common-mode transient immunity (See Section 7.6)	Slew rate of GND versus VSSA/B, INA and INB both are tied to GND or VCCI; V_{CM} = 1500V	125			V/ns

Copyright © 2024 Texas Instruments Incorporated

6.11 Insulation Characteristics Curves

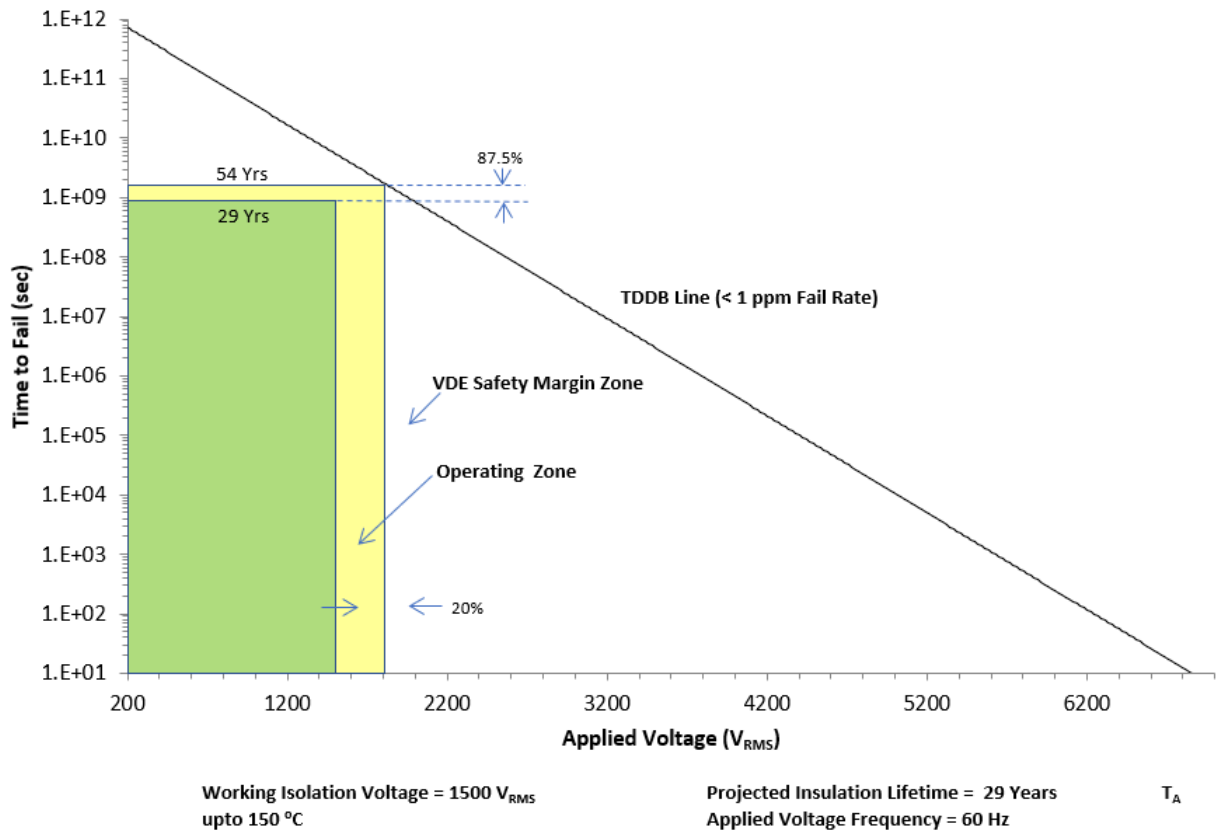

Figure 6-1. Reinforced Isolation Capacitor Life Time Projection

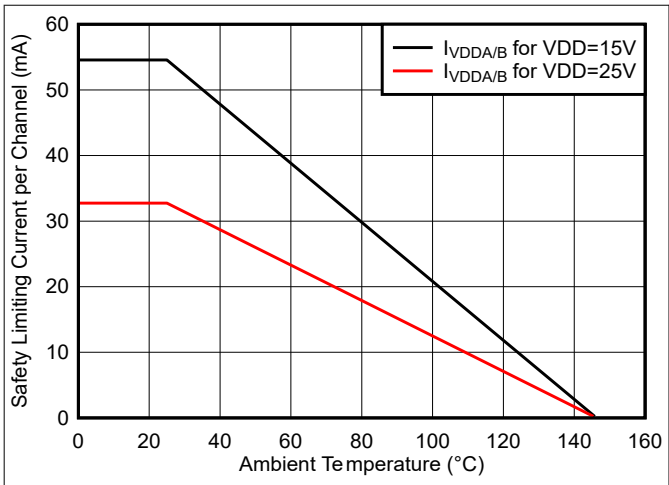

Figure 6-2. Thermal Derating Curve for Safety-Related Limiting Current (Current in Each Channel with Both Channels Running Simultaneously)

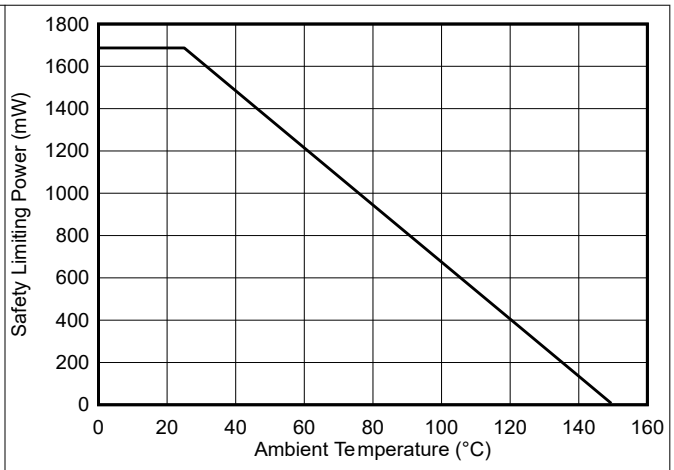

Figure 6-3. Thermal Derating Curve for Safety-Related Limiting Power

Copyright © 2024 Texas Instruments Incorporated

6.12 Typical Characteristics

VDDA = VDDB= 15 V, VCCI = 3.3 V, T_A = 25°C, No load unless otherwise noted.

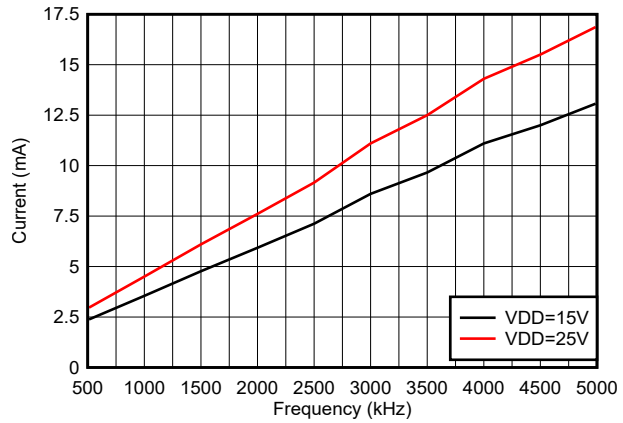

Figure 6-4. Per Channel Current Consumption vs Frequency (No Load, VDD = 15 V or 25 V)

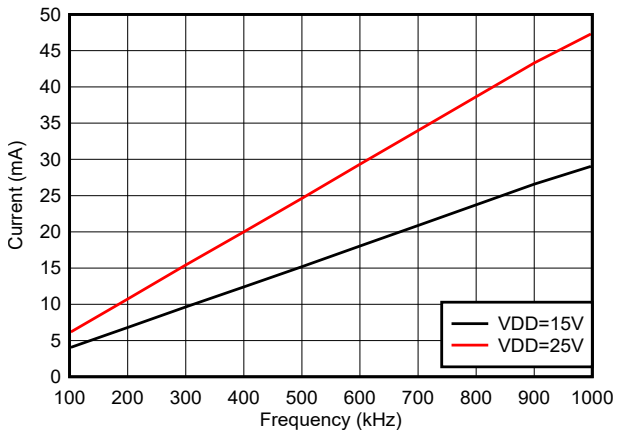

Figure 6-5. Per Channel Current Consumption ($I_{VDDA/B}$) vs Frequency (1-nF Load, VDD = 15 V or 25 V)

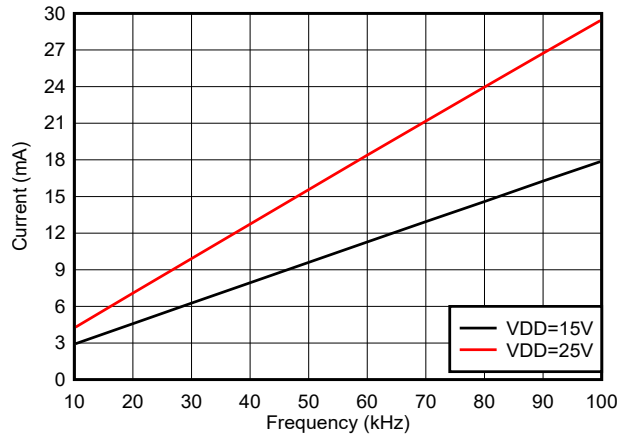

Figure 6-6. Per Channel Current Consumption ($I_{VDDA/B}$) vs Frequency (10-nF Load, VDD = 15 V or 25 V)

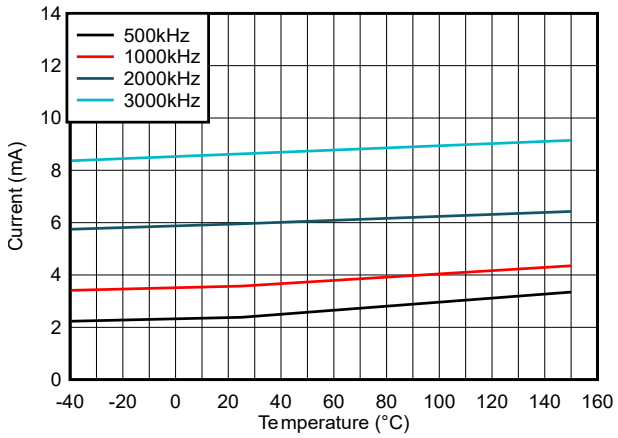

Figure 6-7. Per Channel ($I_{VDDA/B}$) Supply Current vs Temperature (No Load, Different Switching Frequencies)

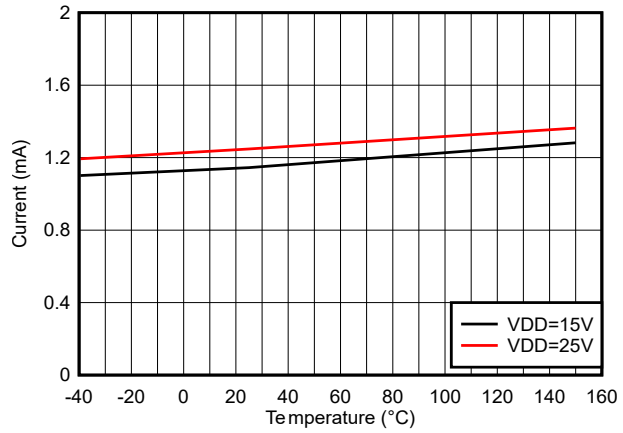

Figure 6-8. Per Channel ($I_{VDDA/B}$) Quiescent Supply Current vs Temperature (No Load, Input Low, No Switching)

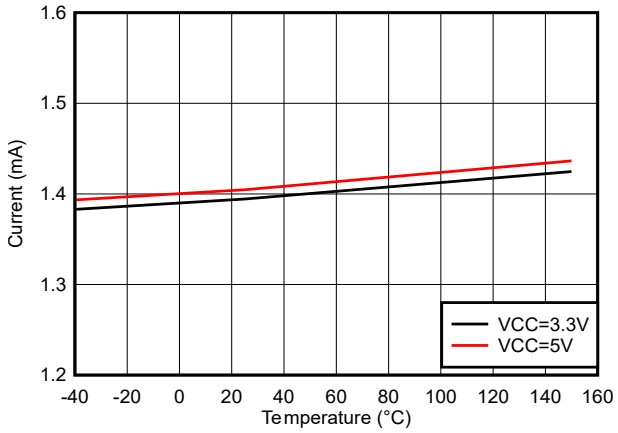

Figure 6-9. I_{VCCI} Quiescent Supply Current vs Temperature (No Load, Input Low, No Switching)

Copyright © 2024 Texas Instruments Incorporated

6.12 Typical Characteristics (continued)

VDDA = VDDB= 15 V, VCCI = 3.3 V, T_A = 25°C, No load unless otherwise noted.

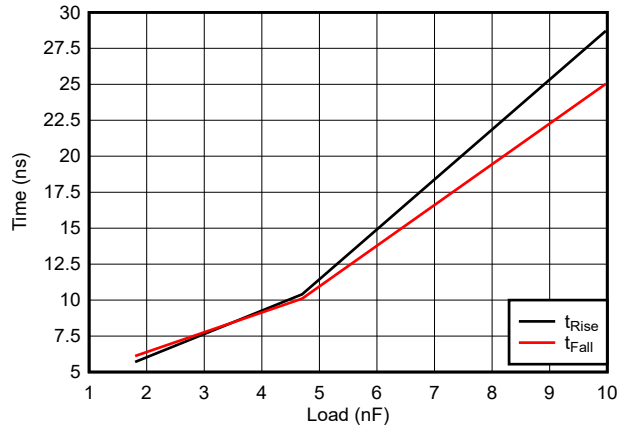

Figure 6-10. Rising and Falling Times vs Load (VDD = 15 V)

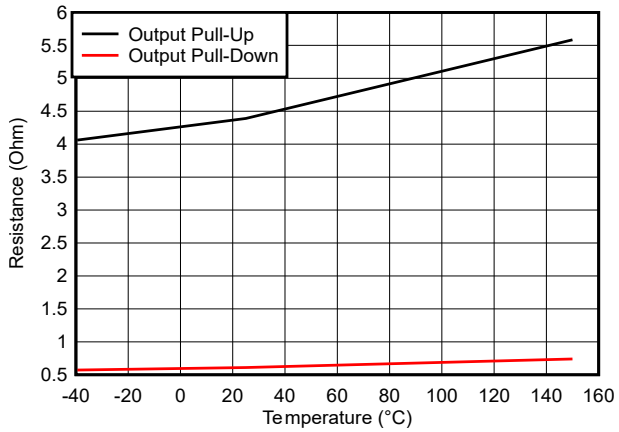

Figure 6-11. Output Resistance vs Temperature

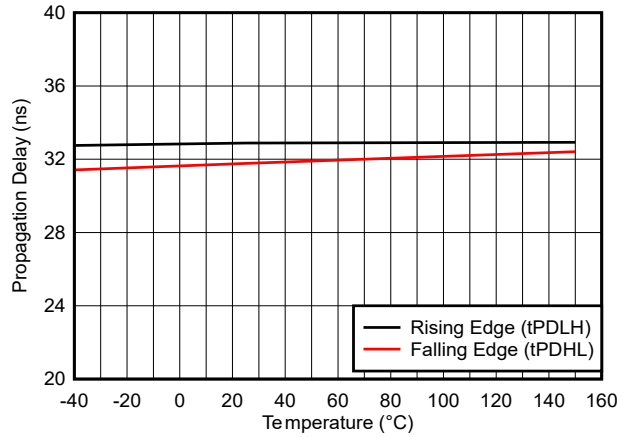

Figure 6-12. Propagation Delay vs Temperature

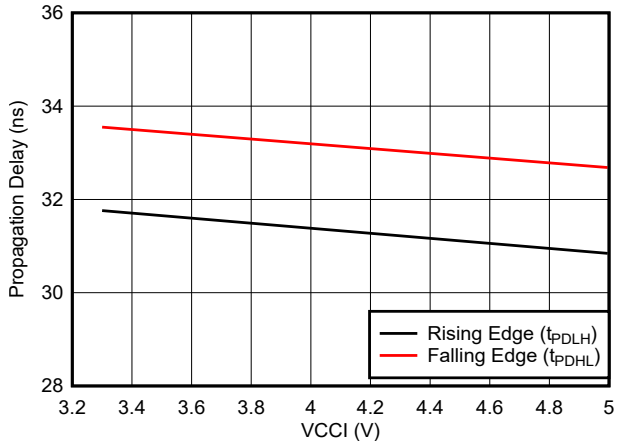

Figure 6-13. Propagation Delay vs VCCI

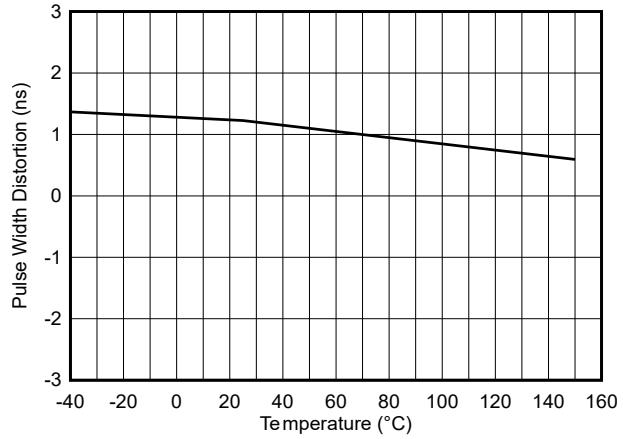

Figure 6-14. Pulse Width Distortion vs Temperature

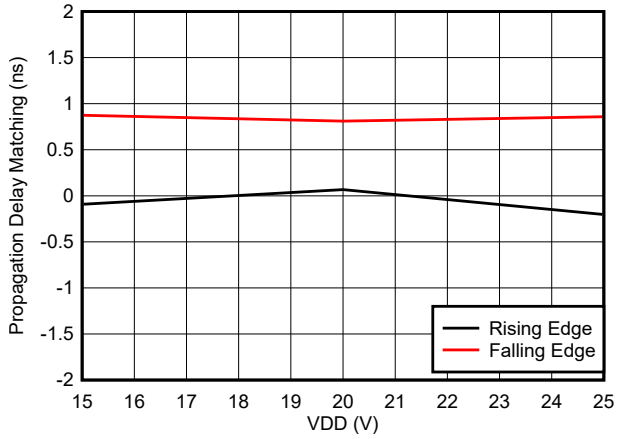

Figure 6-15. Propagation Delay Matching (t_{DM}) vs VDD

Copyright © 2024 Texas Instruments Incorporated

6.12 Typical Characteristics (continued)

VDDA = VDDB= 15 V, VCCI = 3.3 V, T_A = 25°C, No load unless otherwise noted.

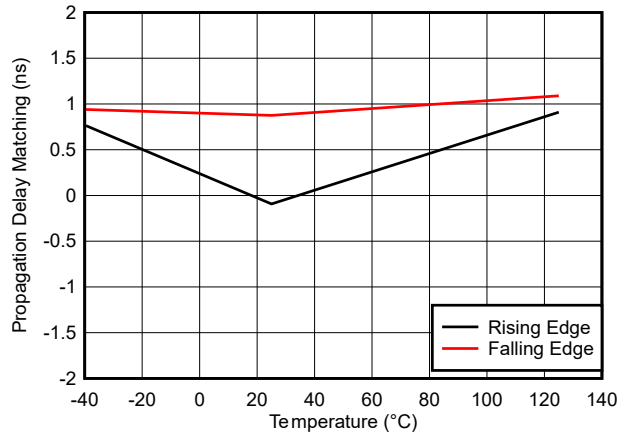

Figure 6-16. Propagation Delay Matching (t_{DM}) vs Temperature

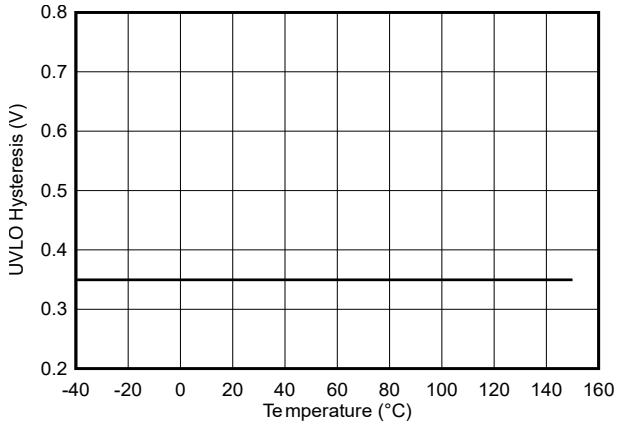

Figure 6-17. VDD 5-V UVLO Hysteresis vs Temperature

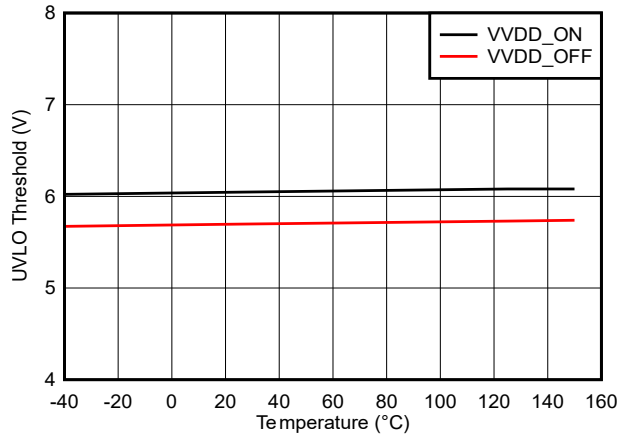

Figure 6-18. VDD 5-V UVLO Threshold vs Temperature

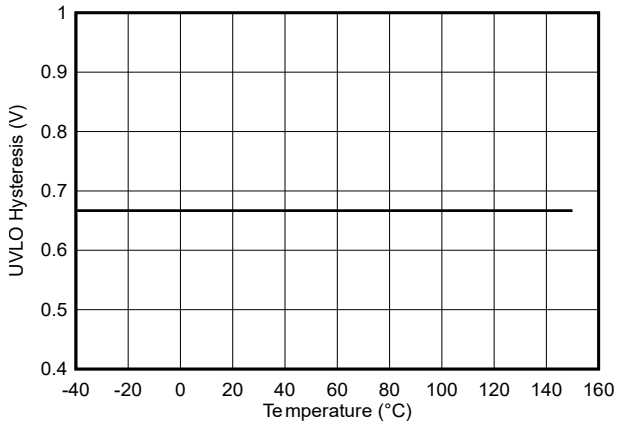

Figure 6-19. VDD 8-V UVLO Hysteresis vs Temperature

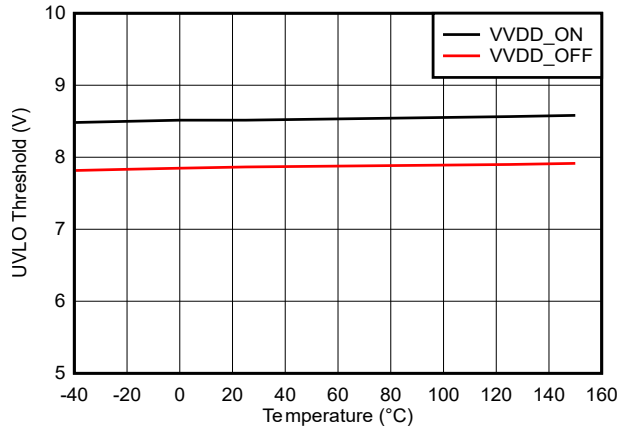

Figure 6-20. VDD 8-V UVLO Threshold vs Temperature

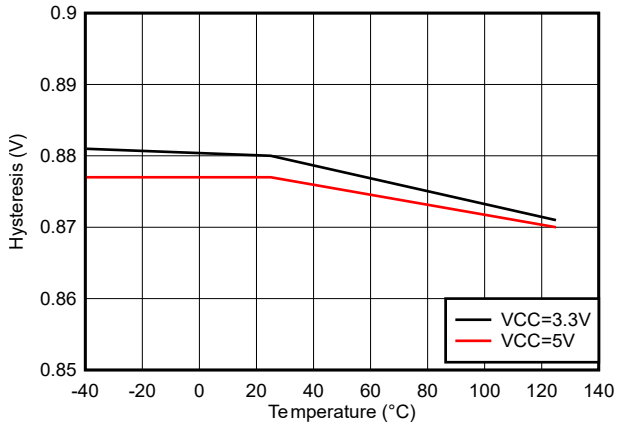

Figure 6-21. IN/DIS Hysteresis vs Temperature

6.12 Typical Characteristics (continued)

VDDA = VDDB= 15 V, VCCI = 3.3 V, T_A = 25°C, No load unless otherwise noted.

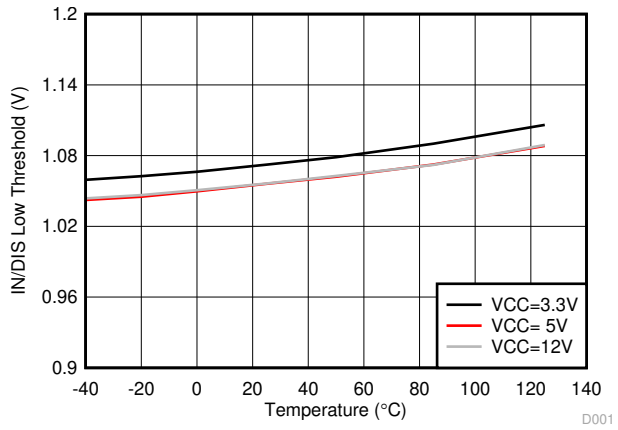

Figure 6-22. IN/DIS Low Threshold

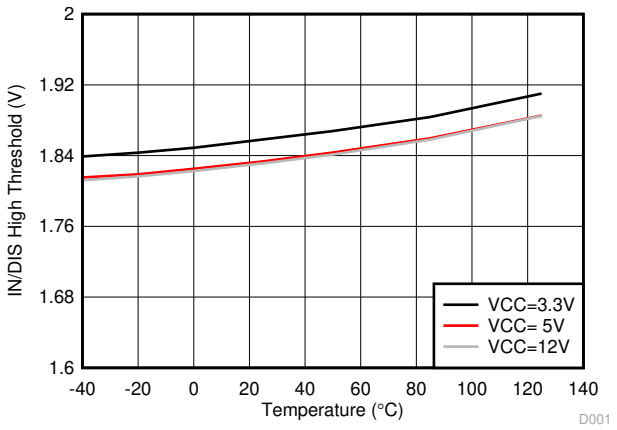

Figure 6-23. IN/DIS High Threshold

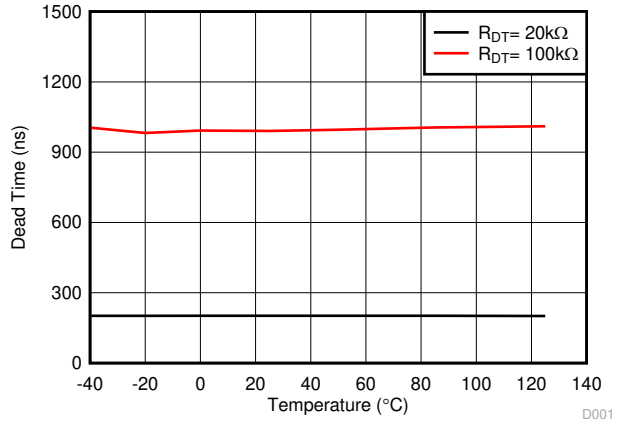

Figure 6-24. Dead Time vs Temperature (with R_{DT} = 20 kΩ and 100 kΩ)

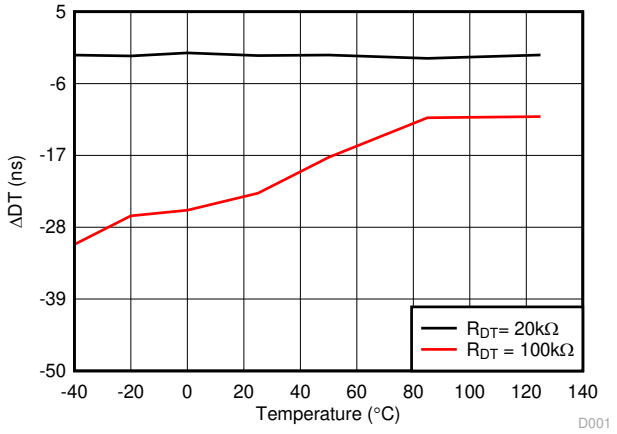

Figure 6-25. Dead Time Matching vs Temperature (with R_{DT} = 20 kΩ and 100 kΩ)

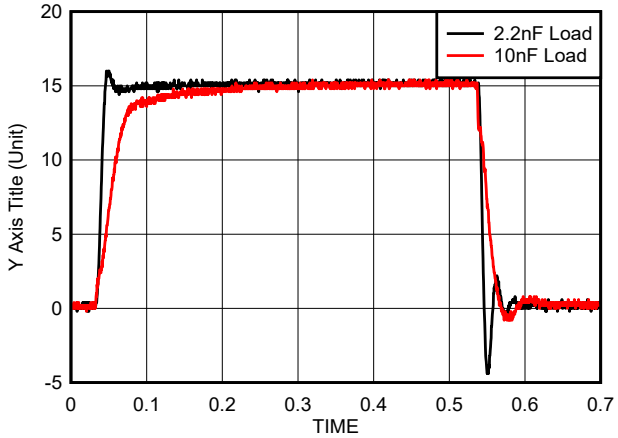

Figure 6-26. Typical Output Waveforms

Copyright © 2024 Texas Instruments Incorporated

7 Parameter Measurement Information

7.1 Propagation Delay and Pulse Width Distortion

Figure 7-1 shows how one calculates pulse width distortion (t_{PWD}) and delay matching (t_{DM}) from the propagation delays of channels A and B. It can be measured by ensuring that both inputs are in phase and disabling the dead time function by shorting the DT Pin to VCC.

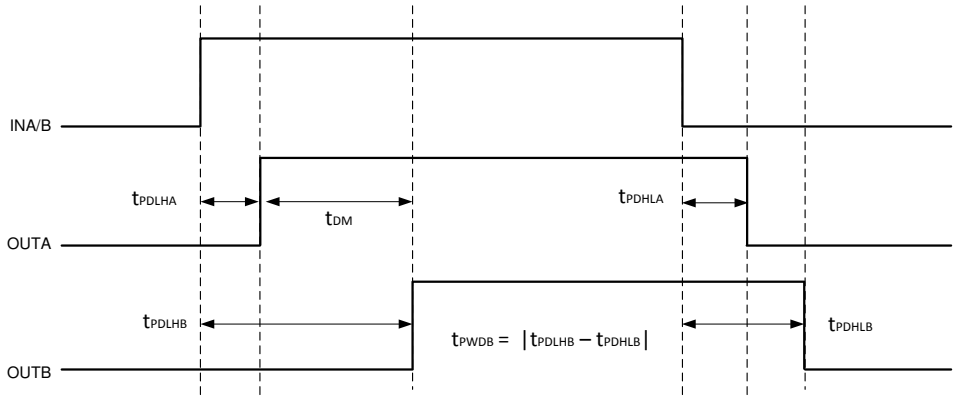

Figure 7-1. Overlapping Inputs, Dead Time Disabled

7.2 Rising and Falling Time

Figure 7-2 shows the criteria for measuring rising (t_{RISE}) and falling (t_{FALL}) times. For more information on how short rising and falling times are achieved see Section 8.3.4.

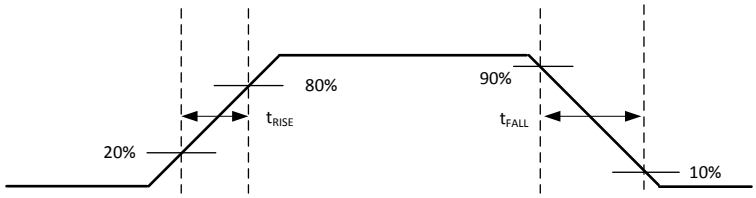

Figure 7-2. Rising and Falling Time Criteria

7.3 Input and Disable Response Time

Figure 7-3 shows the response time of the disable function. It is recommended to bypass using a ≈1nF low ESR/ESL capacitor close to DIS pin when connecting DIS pin to a micro controller with distance. For more information, see Section 8.4.1.

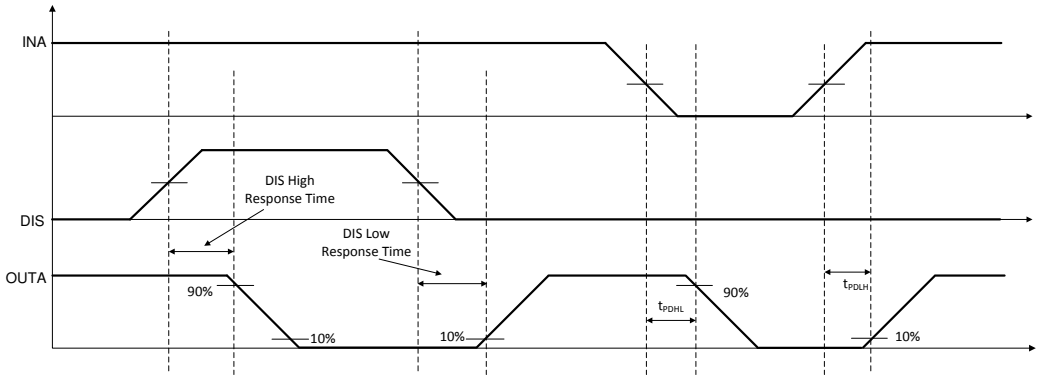

Figure 7-3. Disable Pin Timing

7.4 Programable Dead Time

Leaving the DT pin open or tying it to GND through an appropriate resistor (R_{DT}) sets a dead-time interval. For more details on dead time, refer to Section 8.4.2.

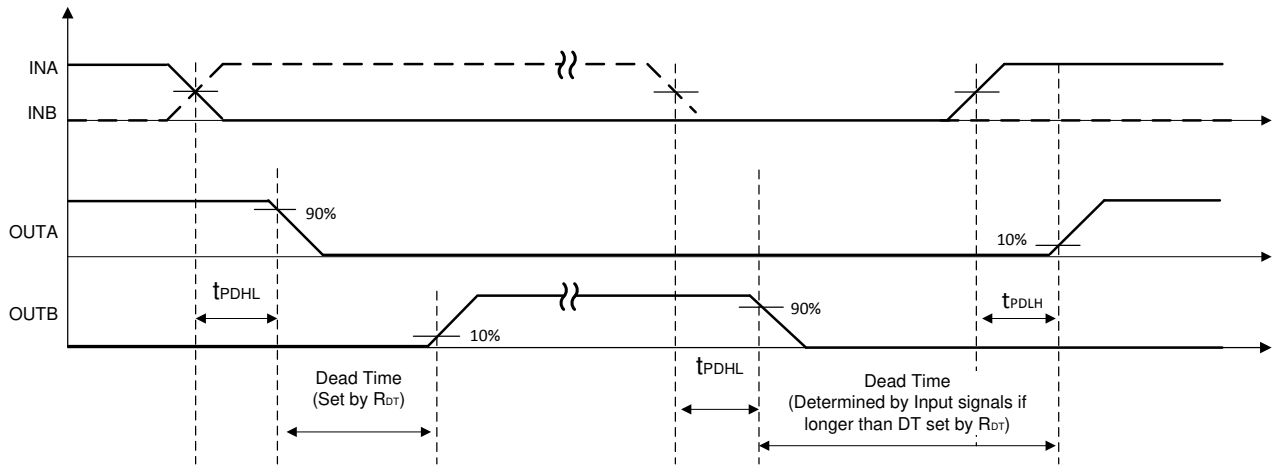

Figure 7-4. Dead-Time Switching Parameters

7.5 Power-up UVLO Delay to OUTPUT

Before the driver is ready to deliver a proper output state, there is a power-up delay from the UVLO rising edge to output and it is defined as $t_{VCCI+\ to\ OUT}$ for VCCI UVLO (typically 40us) and $t_{VDD+\ to\ OUT}$ for VDD UVLO (Max 10us). It is recommended to consider proper margin before launching PWM signal after the driver's VCCI and VDD bias supply is ready. Figure 7-5 and Figure 7-6 show the power-up UVLO delay timing diagram for VCCI and VDD.

If INA or INB are active before VCCI or VDD have crossed above their respective on thresholds, the output will not update until $t_{VCCI+\ to\ OUT}$ or $t_{VDD+\ to\ OUT}$ after VCCI or VDD crossing its UVLO rising threshold. However, when either VCCI or VDD receive a voltage less than their respective off thresholds, there is <2µs delay, depending on the voltage slew rate on the supply pins, before the outputs are held low. This asymmetric delay is designed to ensure safe operation during VCCI or VDD brownouts.

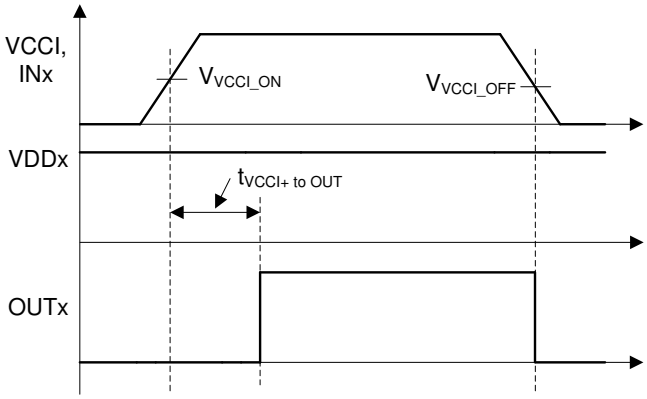

Figure 7-5. VCCI Power-up UVLO Delay

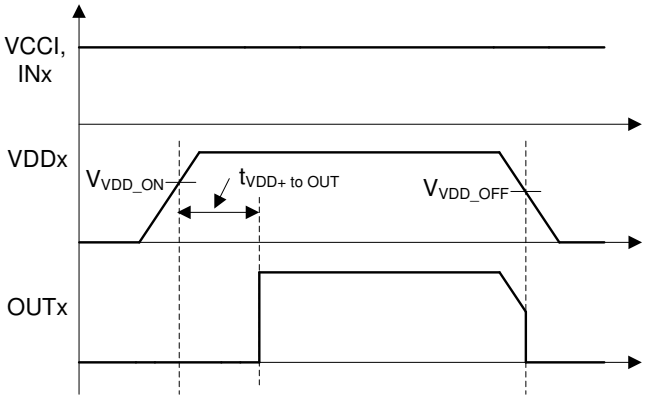

Figure 7-6. VDDA/B Power-up UVLO Delay

Copyright © 2024 Texas Instruments Incorporated

7.6 CMTI Testing

Figure 7-7 is a simplified diagram of the CMTI testing configuration.

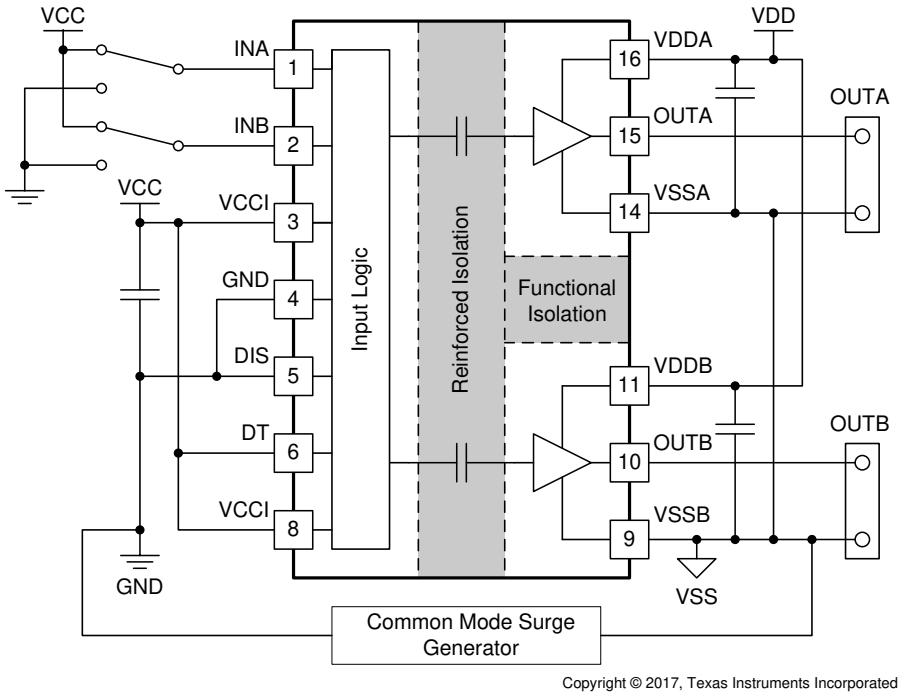

Figure 7-7. Simplified CMTI Testing Setup

8 Detailed Description

8.1 Overview

In order to switch power transistors rapidly and reduce switching power losses, high-current gate drivers are often placed between the output of control devices and the gates of power transistors. There are several instances where controllers are not capable of delivering sufficient current to drive the gates of power transistors. This is especially the case with digital controllers, since the input signal from the digital controller is often a 3.3-V logic signal capable of only delivering a few mA.

The UCC21520, UCC21520A are flexible dual gate drivers which can be configured to fit a variety of power supply and motor drive topologies, as well as drive several types of transistors, including SiC MOSFETs. The UCC21520, UCC21520A have many features that allow it to integrate well with control circuitry and protect the gates it drives such as: resistor-programmable dead time (DT) control, a DISABLE pin, and under voltage lock out (UVLO) for both input and output voltages. The UCC21520 and the UCC21520A also hold its outputs low when the inputs are left open or when the input pulse is not wide enough. The driver inputs are CMOS and TTL compatible for interfacing to digital and analog power controllers alike. Each channel is controlled by its respective input pins (INA and INB), allowing full and independent control of each of the outputs.

8.2 Functional Block Diagram

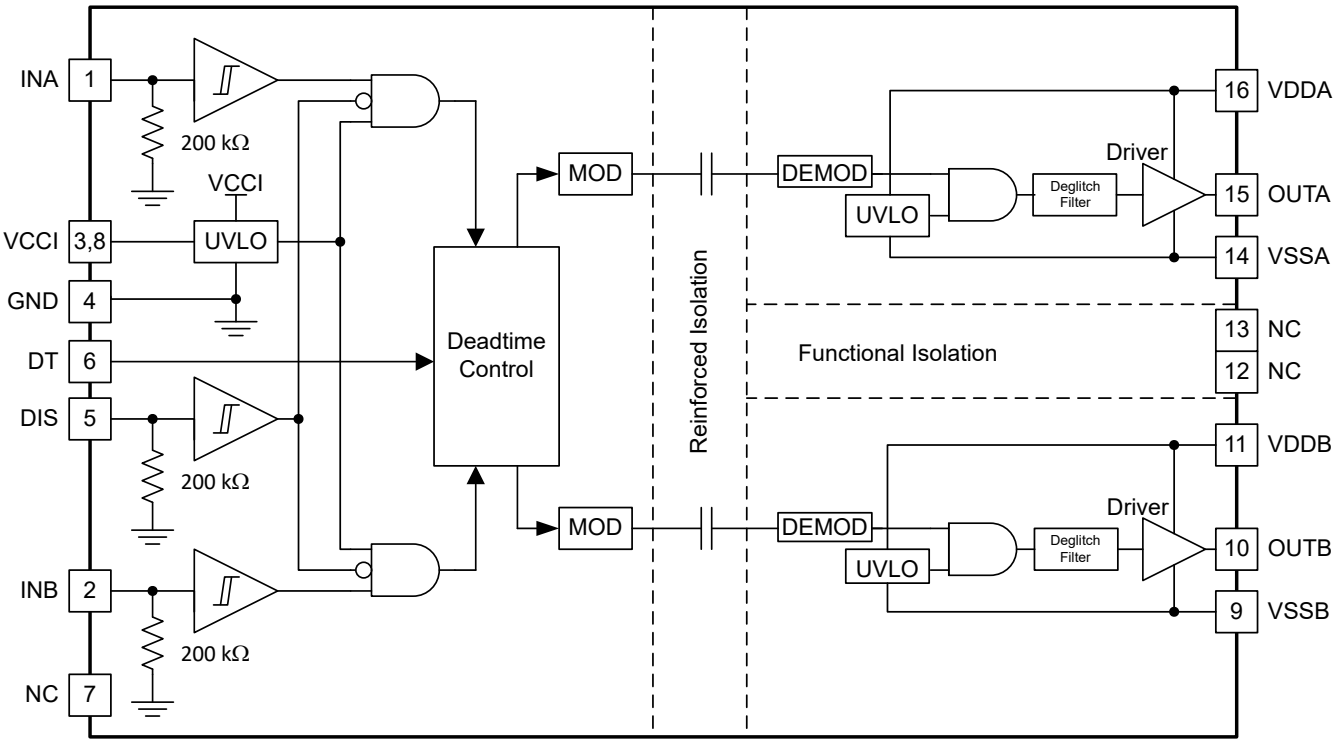

Copyright © 2024, Texas Instruments Incorporated

Copyright © 2024 Texas Instruments Incorporated

8.3 Feature Description

8.3.1 VDD, VCCI, and Undervoltage Lock Out (UVLO)

The UCC21520 and the UCC21520A have an internal undervoltage lock out (UVLO) protection feature on the supply circuit blocks between the VDD and VSS pins for both outputs. When the VDD bias voltage is lower than V_{VDD_ON} at device start-up or lower than V_{VDD_OFF} after start-up, the VDD UVLO feature holds the effected output low, regardless of the status of the input pins (INA and INB).

When the output stages of the driver are in an unbiased or UVLO condition, the driver outputs are held low by an active clamp circuit that limits the voltage rise on the driver outputs (Illustrated in Figure 8-1). In this condition, the upper PMOS is resistively held off by $R_{Hi\text{-}Z}$ while the lower NMOS gate is tied to the driver output through R_{CLAMP}. In this configuration, the output is effectively clamped to the threshold voltage of the lower NMOS device, typically around 1.5 V, when no bias power is available.

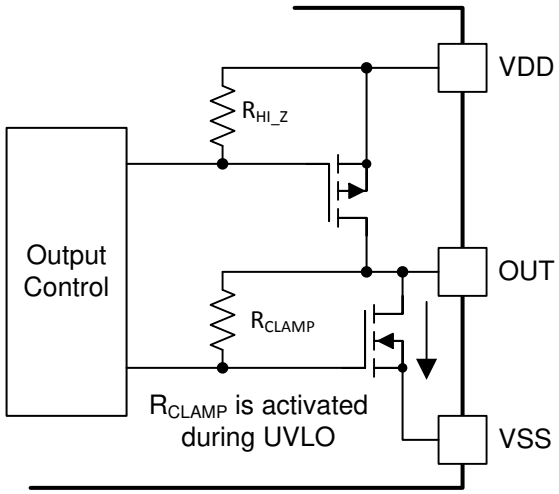

Figure 8-1. Simplified Representation of Active Pulldown Feature

The VDD UVLO protection has a hysteresis feature (V_{VDD_HYS}). This hysteresis prevents chatter when there is ground noise from the power supply. Also this allows the device to accept small drops in bias voltage, which is bound to happen when the device starts switching and operating current consumption increases suddenly.

The input side of the UCC21520 and the UCC21520A also has an internal undervoltage lock out (UVLO) protection feature. The device isn't active unless the voltage, VCCI, is going to exceed V_{VCCI_ON} on start up. And a signal will cease to be delivered when that pin receives a voltage less than V_{VCCI_OFF}. And, just like the UVLO for VDD, there is hysteresis (V_{VCCI_HYS}) to ensure stable operation.

Copyright © 2024 Texas Instruments Incorporated

All versions of the UCC21520 can withstand an absolute maximum of 30 V for VDD, and 20 V for VCCI.

Table 8-1. UCC21520 and UCC21520A VCCI UVLO Feature Logic

CONDITION	INPUTS		OUTPUTS	
	INA	INB	OUTA	OUTB
VCCI-GND < V_{VCCI_ON} during device start up	H	L	L	L
VCCI-GND < V_{VCCI_ON} during device start up	L	H	L	L
VCCI-GND < V_{VCCI_ON} during device start up	H	H	L	L
VCCI-GND < V_{VCCI_ON} during device start up	L	L	L	L
VCCI-GND < V_{VCCI_OFF} after device start up	H	L	L	L
VCCI-GND < V_{VCCI_OFF} after device start up	L	H	L	L
VCCI-GND < V_{VCCI_OFF} after device start up	H	H	L	L
VCCI-GND < V_{VCCI_OFF} after device start up	L	L	L	L

Table 8-2. UCC21520 and UCC21520A VDD UVLO Feature Logic

CONDITION	INPUTS		OUTPUTS	
	INA	INB	OUTA	OUTB
VDD-VSS < V_{VDD_ON} during device start up	H	L	L	L
VDD-VSS < V_{VDD_ON} during device start up	L	H	L	L
VDD-VSS < V_{VDD_ON} during device start up	H	H	L	L
VDD-VSS < V_{VDD_ON} during device start up	L	L	L	L
VDD-VSS < V_{VDD_OFF} after device start up	H	L	L	L
VDD-VSS < V_{VDD_OFF} after device start up	L	H	L	L
VDD-VSS < V_{VDD_OFF} after device start up	H	H	L	L
VDD-VSS < V_{VDD_OFF} after device start up	L	L	L	L

Copyright © 2024 Texas Instruments Incorporated

8.3.2 Input and Output Logic Table

Table 8-3. INPUT/OUTPUT Logic Table (1)

Assume VCCI, VDDA, VDDB are powered up. See Section 8.3.1 for more information on UVLO operation modes.

INPUTS		DISABLE	OUTPUTS		NOTE
INA	INB		OUTA	OUTB	
L	L	L	L	L	If Dead Time function is used, output transitions occur after the dead time expires. See Section 8.4.2
L	H	L	L	H	
H	L	L	H	L	
H	H	L	L	L	DT is left open or programmed with R_{DT}
H	H	L	H	H	DT pin pulled to VCCI
Left Open	Left Open	L	L	L	-
X	X	H or Left Open	L	L	-

(1) "X" means L, H or left open.

8.3.3 Input Stage

The input pins (INA, INB, and DIS) of the UCC21520 and the UCC21520A are based on a TTL and CMOS compatible input-threshold logic that is totally isolated from the VDD supply voltage. The input pins are easy to drive with logic-level control signals (such as those from 3.3-V micro-controllers), since the UCC21520 and the UCC21520A have a typical high threshold (V_{INAH}) of 1.8 V and a typical low threshold of 1 V, which vary little with temperature (see Figure 6-22, Figure 6-23). A wide hysterisis (V_{INA_HYS}) of 0.8 V makes for good noise immunity and stable operation. If any of the inputs are ever left open, internal pull-down resistors force the pin low. These resistors are typically 200 kΩ (see Section 8.2). However, it is still recommended to ground an input if it is not being used.

Since the input side of the UCC21520 and the UCC21520A is isolated from the output drivers, the input signal amplitude can be larger or smaller than VDD, provided that it doesn't exceed the recommended limit. This allows greater flexibility when integrating with control signal sources, and allows the user to choose the most efficient VDD for their chosen gate. That said, the amplitude of any signal applied to INA or INB must *never* be at a voltage higher than VCCI.

Copyright © 2024 Texas Instruments Incorporated

8.3.4 Output Stage

The UCC21520 and the UCC21520A output stages feature a pull-up structure which delivers the highest peak-source current when it is most needed, during the Miller plateau region of the power-switch turn on transition (when the power switch drain or collector voltage experiences dV/dt). The output stage pull-up structure features a P-channel MOSFET and an additional *Pull-Up* N-channel MOSFET in parallel. The function of the N-channel MOSFET is to provide a brief boost in the peak-sourcing current, enabling fast turn on. This is accomplished by briefly turning on the N-channel MOSFET during a narrow instant when the output is changing states from low to high. The on-resistance of this N-channel MOSFET (R_{NMOS}) is approximately 1.47 Ω when activated.

The R_{OH} parameter is a DC measurement and it is representative of the on-resistance of the P-channel device only. This is because the *Pull-Up* N-channel device is held in the off state in DC condition and is turned on only for a brief instant when the output is changing states from low to high. Therefore the effective resistance of the UCC21520and the UCC21520A pull-up stage during this brief turn-on phase is much lower than what is represented by the R_{OH} parameter. Therefore, the value of R_{OH} belies the fast nature of the UCC21520 and the UCC21520A's turn-on time.

The pull-down structure in the UCC21520 and the UCC21520A is simply composed of an N-channel MOSFET. The R_{OL} parameter, which is also a DC measurement, is representative of the impedance of the pull-down state in the device. Both outputs of the UCC21520 and the UCC21520A are capable of delivering 4-A peak source and 6-A peak sink current pulses. The output voltage swings between VDD and VSS provides rail-to-rail operation, thanks to the MOS-out stage which delivers very low drop-out.

To ensure robust and reliable operation of gate drivers, pay special attention to the minimum pulse width. The minimum pulse width shown in the electrical characteristics table describes the minimum input pulse that would be passed to the output in an unloaded driver. This is dictated by the deglitch filter present in the driver IC. An input ON or OFF pulse width longer than the maximum specification is needed to guarantee an output state change and avoid potential shoot-through. With a loaded driver, extra precaution must be taken to ensure robust operation of the system. During gate switching, if the output state changes before the driver completes each transition, a non-zero current switching event occurs. Combined with layout parasitics, non-zero current switching can cause internal rail overshoot and EOS damage of the gate driver. Thus, a minimum output width is needed for reliable system operation. This minimum output pulse width is dependent on several factors: gate capacitance, VDD supply voltage, gate resistance, and PCB layout parasitics. The minimum pulse width for robust operation might be magnitudes larger than the minimum pulse width shown in the electrical characteristics table. System-level study should be carried out to determine the minimum output pulse width required for each system.

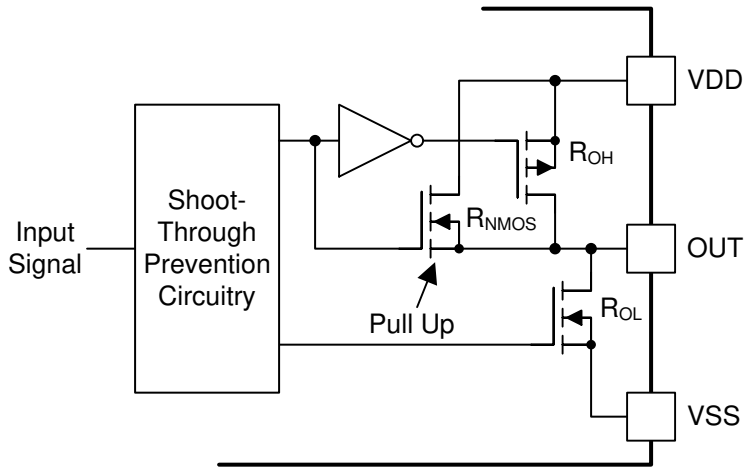

Figure 8-2. Output Stage

Copyright © 2024 Texas Instruments Incorporated

8.3.5 Diode Structure in the UCC21520 and the UCC21520A

Figure 8-3 illustrates the multiple diodes involved in the ESD protection components of the UCC21520 and the UCC21520A. This provides a pictorial representation of the absolute maximum rating for the device.

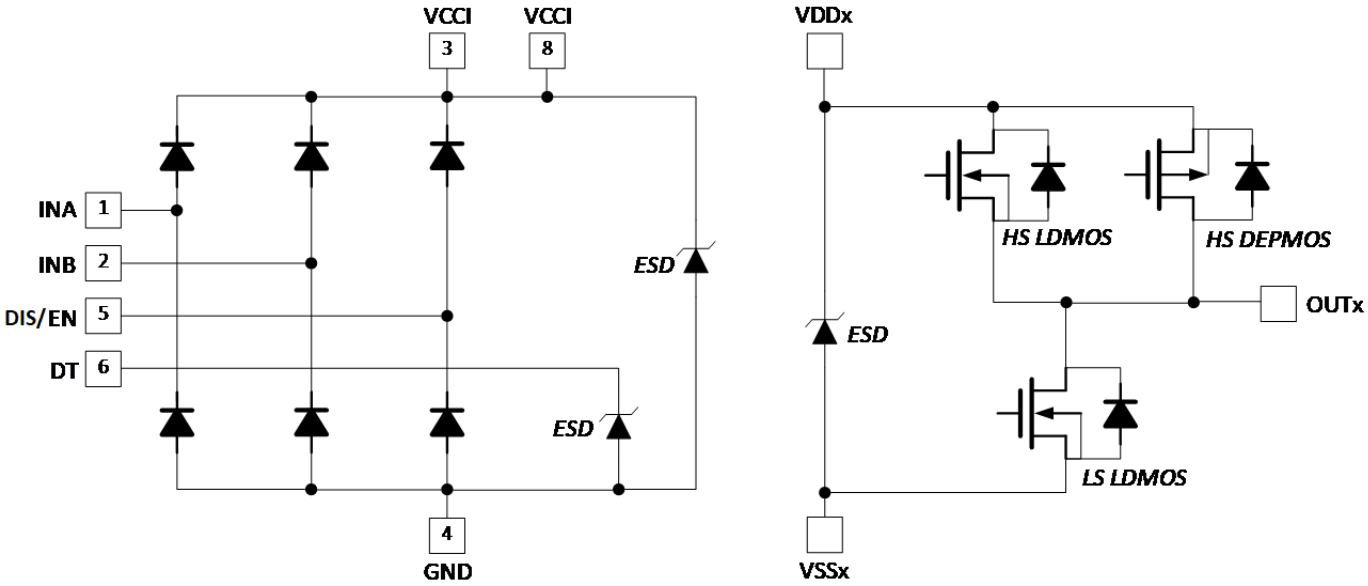

Figure 8-3. ESD Structure

8.4 Device Functional Modes

8.4.1 Disable Pin

Setting the DISABLE pin high shuts down both outputs simultaneously. Grounding (or left open) the DISABLE pin allows the UCC21520 and the UCC21520A to operate normally. The DISABLE response time is in the range of 20 ns and quite responsive, which is as fast as propagation delay. The DISABLE pin is only functional (and necessary) when VCCI stays above the UVLO threshold. It is recommended to tie this pin to ground if the DISABLE pin is not used to achieve better noise immunity, and it is recommended to bypass using a ≈1-nF low ESR/ESL capacitor close to DIS pin when connecting DIS pin to a micro controller with distance.

Copyright © 2024 Texas Instruments Incorporated

8.4.2 Programmable Dead-Time (DT) Pin

The UCC21520 and the UCC21520A allow the user to adjust dead time (DT) in the following ways:

8.4.2.1 Tying the DT Pin to VCC

Outputs completely match inputs, so no dead time is asserted. This allows outputs to overlap.

8.4.2.2 DT Pin Connected to a Programming Resistor Between DT and GND Pins

One can program t_{DT} by placing a resistor, R_{DT}, between the DT pin and GND. The appropriate R_{DT} value can be determined from Equation 1, where R_{DT} is in kΩ and t_{DT} is in ns:

$$t_{DT} \approx 10 \times R_{DT} \tag{1}$$

The steady state voltage at DT pin is around 0.8 V, and the DT pin current will be less than 10uA when R_{DT}=100kΩ. When using R_{DT}> 5kΩ, it is recommended to parallel a ceramic capacitor, ≤1nF, close to the chip with R_{DT} to achieve better noise immunity and better dead time matching between two channels. It is not recommended to leave the DT pin floating.

An input signal's falling edge activates the programmed dead time for the other signal. The output signals' dead time is always set to the longer of either the driver's programmed dead time or the input signal's own dead time. If both inputs are high simultaneously, both outputs will immediately be set low. This feature is used to prevent shoot-through, and it doesn't affect the programmed dead time setting for normal operation. Various driver dead time logic operating conditions are illustrated and explained in:

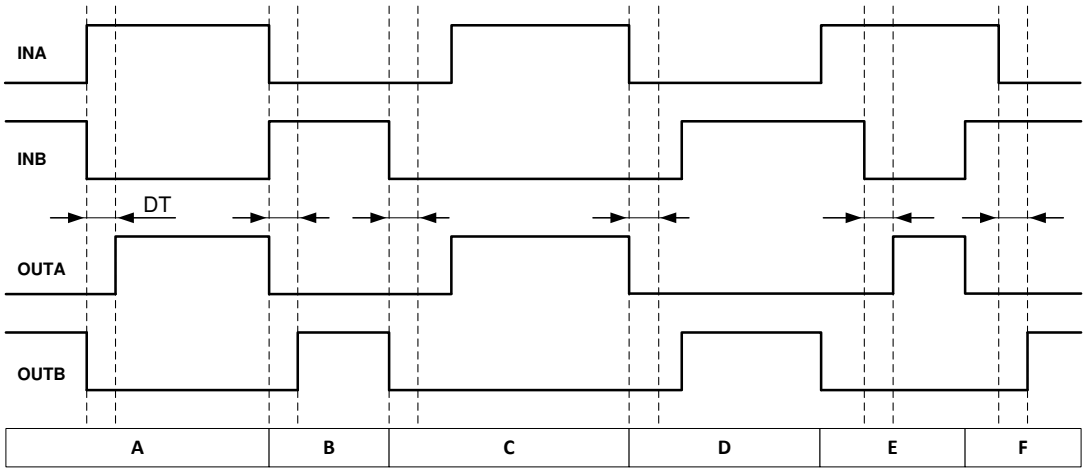

Figure 8-4. Input and Output Logic Relationship With Input Signals

Condition A: INB goes low, INA goes high. INB sets OUTB low immediately and assigns the programmed dead time to OUTA. OUTA is allowed to go high after the programmed dead time.

Condition B: INB goes high, INA goes low. Now INA sets OUTA low immediately and assigns the programmed dead time to OUTB. OUTB is allowed to go high after the programmed dead time.

Condition C: INB goes low, INA is still low. INB sets OUTB low immediately and assigns the programmed dead time for OUTA. In this case, the input signal's *own* dead time is longer than the programmed dead time. Thus, when INA goes high, it immediately sets OUTA high.

Condition D: INA goes low, INB is still low. INA sets OUTA low immediately and assigns the programmed dead time to OUTB. INB's *own* dead time is longer than the programmed dead time. Thus, when INB goes high, it immediately sets OUTB high.

Condition E: INA goes high, while INB and OUTB are still high. To avoid overshoot, INA immediately pulls OUTB low and keeps OUTA low. After some time OUTB goes low and assigns the programmed dead time to OUTA. OUTB is already low. After the programmed dead time, OUTA is allowed to go high.

Copyright © 2024 Texas Instruments Incorporated

Condition F: INB goes high, while INA and OUTA are still high. To avoid overshoot, INB immediately pulls OUTA low and keeps OUTB low. After some time OUTA goes low and assigns the programmed dead time to OUTB. OUTA is already low. After the programmed dead time, OUTB is allowed to go high.

9 Application and Implementation

Note

Information in the following applications sections is not part of the TI component specification, and TI does not warrant its accuracy or completeness. TI's customers are responsible for determining suitability of components for their purposes, as well as validating and testing their design implementation to confirm system functionality.

9.1 Application Information

The UCC21520 or the UCC21520A effectively combines both isolation and buffer-drive functions. The flexible, universal capability of the UCC21520 and the UCC21520A (with up to 18-V VCCI and 25-V VDDA/VDDB) allows the device to be used as a low-side, high-side, high-side/low-side or half-bridge driver for MOSFETs, IGBTs or SiC MOSFETs. With integrated components, advanced protection features (UVLO, dead time, and disable) and optimized switching performance; the UCC21520 and the UCC21520A enables designers to build smaller, more robust designs for enterprise, telecom, automotive, and industrial applications with a faster time to market.

9.2 Typical Application

The circuit in Figure 9-1 shows a reference design with the UCC21520 driving a typical half-bridge configuration which could be used in several popular power converter topologies such as synchronous buck, synchronous boost, half-bridge/full bridge isolated topologies, and 3-phase motor drive applications.

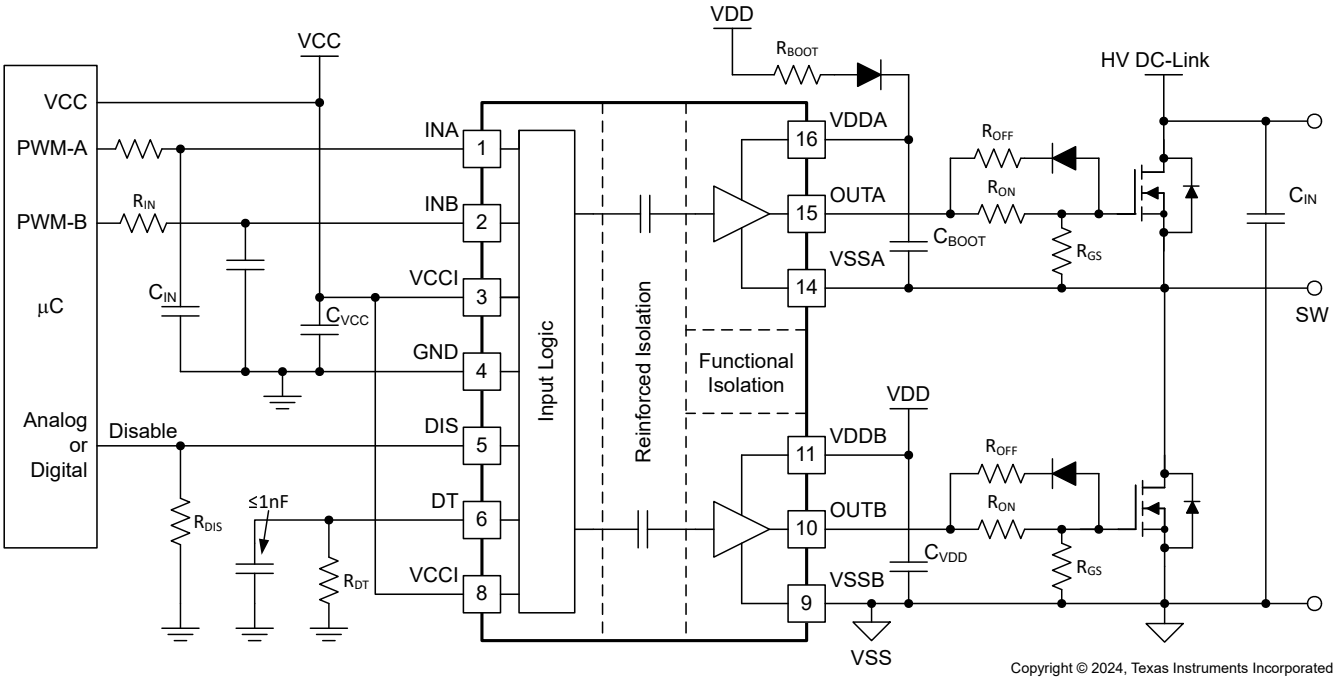

Figure 9-1. Typical Application Schematic

Copyright © 2024 Texas Instruments Incorporated

9.2.1 Design Requirements

Table 9-1 lists reference design parameters for the example application: UCC21520 driving 1200-V SiC-MOSFETs in a high side-low side configuration.

Table 9-1. UCC21520 Design Requirements

PARAMETER	VALUE	UNITS
Power transistor	C2M0080120D	-
VCC	5.0	V
VDD	20	V
Input signal amplitude	3.3	V
Switching frequency (f_s)	100	kHz
DC link voltage	800	V

9.2.2 Detailed Design Procedure

9.2.2.1 Designing INA/INB Input Filter

It is recommended that users avoid shaping the signals to the gate driver in an attempt to slow down (or delay) the signal at the output. However, a small input R_{IN}-C_{IN} filter can be used to filter out the ringing introduced by non-ideal layout or long PCB traces.

Such a filter should use an R_{IN} in the range of 0 Ω to100 Ω and a C_{IN} between 10 pF and 100 pF. In the example, an R_{IN} = 51 Ω and a C_{IN} = 33 pF are selected, with a corner frequency of approximately 100 MHz.

When selecting these components, it is important to pay attention to the trade-off between good noise immunity and propagation delay.

9.2.2.2 Select External Bootstrap Diode and its Series Resistor

The bootstrap capacitor is charged by VDD through an external bootstrap diode every cycle when the low side transistor turns on. Charging the capacitor involves high-peak currents, and therefore transient power dissipation in the bootstrap diode may be significant. Conduction loss also depends on the diode's forward voltage drop. Both the diode conduction losses and reverse recovery losses contribute to the total losses in the gate driver circuit.

When selecting external bootstrap diodes, it is recommended that one chose high voltage, fast recovery diodes or SiC Schottky diodes with a low forward voltage drop and low junction capacitance in order to minimize the loss introduced by reverse recovery and related grounding noise bouncing. In the example, the DC-link voltage is 800 V_{DC}. The voltage rating of the bootstrap diode should be higher than the DC-link voltage with a good margin. Therefore, a 1200-V SiC diode, C4D02120E, is chosen in this example.

When designing a bootstrap supply, it is recommended to use a bootstrap resistor, R_{BOOT}. A bootstrap resistor, is also used to reduce the inrush current in D_{BOOT} and limit the ramp up slew rate of voltage of VDDA-VSSA during each switching cycle.

Failure to limit the voltage to VDDx-VSSx to less than the Absolute Maximum Ratings of the FET and UCC21520 may result in permanent damage to the device in certain cases.

The recommended value for R_{BOOT} is between 1 Ω and 20 Ω depending on the diode used. In the example, a current limiting resistor of 2.2 Ω is selected to limit the inrush current of bootstrap diode. The estimated worst case peak current through D_{Boot} is,

$$I_{DBoot(pk)} = \frac{V_{DD} - V_{BDF}}{R_{Boot}} = \frac{20V - 2.5V}{2.2\Omega} \approx 8A \tag{2}$$

where

- V_{BDF} is the estimated bootstrap diode forward voltage drop at 8 A.

9.2.2.3 Gate Driver Output Resistor

The external gate driver resistors, R_{ON}/R_{OFF}, are used to:

1. Limit ringing caused by parasitic inductances/capacitances.
2. Limit ringing caused by high voltage/current switching dv/dt, di/dt, and body-diode reverse recovery.
3. Fine-tune gate drive strength, i.e. peak sink and source current to optimize the switching loss.
4. Reduce electromagnetic interference (EMI).

As mentioned in Section 8.3.4, the UCC21520 has a pull-up structure with a P-channel MOSFET and an additional *pull-up* N-channel MOSFET in parallel. The combined peak source current is 4 A. Therefore, the peak source current can be predicted with:

$$I_{OA+} = \min\left(4A, \frac{V_{DD} - V_{BDF}}{R_{NMOS} \,||\, R_{OH} + R_{ON} + R_{GFET_Int}}\right) \tag{3}$$

$$I_{OB+} = \min\left(4A, \frac{V_{DD}}{R_{NMOS} \,||\, R_{OH} + R_{ON} + R_{GFET_Int}}\right) \tag{4}$$

where

- R_{ON}: External turn-on resistance.
- R_{GFET_INT}: Power transistor internal gate resistance, found in the power transistor datasheet.
- I_{O+} = Peak source current – The minimum value between 4 A, the gate driver peak source current, and the calculated value based on the gate drive loop resistance.

In this example:

$$I_{OA+} = \frac{V_{DD} - V_{BDF}}{R_{NMOS} \,||\, R_{OH} + R_{ON} + R_{GFET_Int}} = \frac{20V - 0.8V}{1.47\Omega \,||\, 5\Omega + 2.2\Omega + 4.6\Omega} \approx 2.4A \tag{5}$$

$$I_{OB+} = \frac{V_{DD}}{R_{NMOS} \,||\, R_{OH} + R_{ON} + R_{GFET_Int}} = \frac{20V}{1.47\Omega \,||\, 5\Omega + 2.2\Omega + 4.6\Omega} \approx 2.5A \tag{6}$$

Therefore, the high-side and low-side peak source current is 2.4 A and 2.5 A respectively. Similarly, the peak sink current can be calculated with:

$$I_{OA-} = \min\left(6A, \frac{V_{DD} - V_{BDF} - V_{GDF}}{R_{OL} + R_{OFF} \,||\, R_{ON} + R_{GFET_Int}}\right) \tag{7}$$

$$I_{OB-} = \min\left(6A, \frac{V_{DD} - V_{GDF}}{R_{OL} + R_{OFF} \,||\, R_{ON} + R_{GFET_Int}}\right) \tag{8}$$

where

- R_{OFF}: External turn-off resistance;
- V_{GDF}: The anti-parallel diode forward voltage drop which is in series with R_{OFF}. The diode in this example is an MSS1P4.
- I_{O-}: Peak sink current – the minimum value between 6 A, the gate driver peak sink current, and the calculated value based on the gate drive loop resistance.

Copyright © 2024 Texas Instruments Incorporated

In this example,

$$I_{OA-} = \frac{V_{DD} - V_{BDF} - V_{GDF}}{R_{OL} + R_{OFF} \,||\, R_{ON} + R_{GFET_Int}} = \frac{20V - 0.8V - 0.75V}{0.55\Omega + 0\Omega + 4.6\Omega} \approx 3.6A \tag{9}$$

$$I_{OB-=} \frac{V_{DD} - V_{GDF}}{R_{OL} + R_{OFF} \,||\, R_{ON} + R_{GFET_Int}} = \frac{20V\text{-}0.75V}{0.55\Omega + 0\Omega + 4.6\Omega} \approx 3.7A \tag{10}$$

Therefore, the high-side and low-side peak sink current is 3.6 A and 3.7 A respectively.

Importantly, the estimated peak current is also influenced by PCB layout and load capacitance. Parasitic inductance in the gate driver loop can slow down the peak gate drive current and introduce overshoot and undershoot. Therefore, it is strongly recommended that the gate driver loop should be minimized. On the other hand, the peak source/sink current is dominated by loop parasitics when the load capacitance (C_{ISS}) of the power transistor is very small (typically less than 1 nF), because the rising and falling time is too small and close to the parasitic ringing period.

Failure to control OUTx voltage to less than the Absolute Maximum Ratings in the datasheet (including transients) may result in permanent damage to the device in certain cases. To reduce excessive gate ringing, it is recommended to use a ferrite bead near the gate of the FET. External clamping diodes can also be added in the case of extended overshoot/undershoot, in order to clamp the OUTx voltage to the VDDx and VSSx voltages.

9.2.2.4 Gate to Source Resistor Selection

A gate to source resistor, R_{GS}, is recommended to pull down the gate to the source voltage when the gate driver output is unpowered and in an indeterminate state. This resistor also helps to mitigate the risk of dv/dt induced turn-on due to Miller current before the gate driver is able to turn on and actively pull low. This resistor is typically sized between 5.1kΩ and 20kΩ, depending on the Vth and ratio of C_{GD} to C_{GS} of the power device.

9.2.2.5 Estimate Gate Driver Power Loss

The total loss, P_G, in the gate driver subsystem includes the power losses of the UCC21520 (P_{GD}) and the power losses in the peripheral circuitry, such as the external gate drive resistor. Bootstrap diode loss is not included in P_G and not discussed in this section.

P_{GD} is the key power loss which determines the thermal safety-related limits of the UCC21520, and it can be estimated by calculating losses from several components.

The first component is the static power loss, P_{GDQ}, which includes quiescent power loss on the driver as well as driver self-power consumption when operating with a certain switching frequency. P_{GDQ} is measured on the bench with no load connected to OUTA and OUTB at a given VCCI, VDDA/VDDB, switching frequency and ambient temperature. Figure 6-4 shows the per output channel current consumption vs operating frequency with no load. In this example, V_{VCCI} = 5 V and V_{VDD} = 20 V. The current on each power supply, with INA/INB switching from 0 V to 3.3 V at 100 kHz is measured to be I_{VCCI} = 2.5 mA, and I_{VDDA} = I_{VDDB} = 1.5 mA. Therefore, the P_{GDQ} can be calculated with

$$P_{GDQ} = V_{VCCI} \times I_{VCCI} + V_{VDDA} \times I_{DDA} + V_{VDDB} \times I_{DDB} \approx 72mW \tag{11}$$

The second component is switching operation loss, P_{GDO}, with a given load capacitance which the driver charges and discharges the load during each switching cycle. Total dynamic loss due to load switching, P_{GSW}, can be estimated with

$$P_{GSW} = 2 \times V_{DD} \times Q_G \times f_{SW} \tag{12}$$

where

- Q_G is the gate charge of the power transistor.

If a split rail is used to turn on and turn off, then VDD is going to be equal to difference between the positive rail to the negative rail.

So, for this example application:

$$P_{GSW} = 2 \times 20V \times 60nC \times 100kHz = 240mW \tag{13}$$

Q_G represents the total gate charge of the power transistor switching 800 V at 20 A, and is subject to change with different testing conditions. The UCC21520 gate driver loss on the output stage, P_{GDO}, is part of P_{GSW}. P_{GDO} will be equal to P_{GSW} if the external gate driver resistances are zero, and all the gate driver loss is dissipated inside the UCC21520. If there are external turn-on and turn-off resistances, the total loss will be distributed between the gate driver pull-up/down resistances and external gate resistances. Importantly, the pull-up/down resistance is a linear and fixed resistance if the source/sink current is not saturated to 4 A/6 A, however, it will be non-linear if the source/sink current is saturated. Therefore, P_{GDO} is different in these two scenarios.

Case 1 - Linear Pull-Up/Down Resistor:

$$P_{GDO} = \frac{P_{GSW}}{2} \times \left(\frac{R_{OH} \,||\, R_{NMOS}}{R_{OH} \,||\, R_{NMOS} + R_{ON} + R_{GFET_Int}} + \frac{R_{OL}}{R_{OL} + R_{OFF} \,||\, R_{ON} + R_{GFET_Int}} \right) \tag{14}$$

In this design example, all the predicted source/sink currents are less than 4 A/6 A, therefore, the UCC21520 gate driver loss can be estimated with:

$$P_{GDO} = \frac{240mW}{2} \times \left(\frac{5\Omega \,||\, 1.47\Omega}{5\Omega \,||\, 1.47\Omega + 2.2\Omega + 4.6\Omega} + \frac{0.55\Omega}{0.55\Omega + 0\Omega + 4.6\Omega} \right) \approx 30mW \tag{15}$$

Case 2 - Nonlinear Pull-Up/Down Resistor:

$$P_{GDO} = 2 \times f_{SW} \times \left[4A \times \int_0^{T_{R_Sys}} \left(V_{DD} - V_{OUTA/B}(t) \right) dt + 6A \times \int_0^{T_{F_Sys}} V_{OUTA/B}(t)\, dt \right] \tag{16}$$

where

- $V_{OUTA/B}(t)$ is the gate driver OUTA and OUTB pin voltage during the turn on and off transient, and it can be simplified that a constant current source (4 A at turn-on and 6 A at turn-off) is charging/discharging a load capacitor. Then, the $V_{OUTA/B}(t)$ waveform will be linear and the T_{R_Sys} and T_{F_Sys} can be easily predicted.

For some scenarios, if only one of the pull-up or pull-down circuits is saturated and another one is not, the P_{GDO} will be a combination of Case 1 and Case 2, and the equations can be easily identified for the pull-up and pull-down based on the above discussion. Therefore, total gate driver loss dissipated in the gate driver UCC21520, P_{GD}, is:

$$P_{GD} = P_{GDQ} + P_{GDO} \tag{17}$$

which is equal to 102 mW in the design example.

9.2.2.6 Estimating Junction Temperature

The junction temperature (T_J) of the UCC21520 can be estimated with:

$$T_J = T_C + \Psi_{JT} \times P_{GD} \tag{18}$$

Copyright © 2024 Texas Instruments Incorporated

where

- T_C is the UCC21520 case-top temperature measured with a thermocouple or some other instrument, and
- Ψ_{JT} is the Junction-to-top characterization parameter from the Thermal Information table.

Using the junction-to-top characterization parameter (Ψ_{JT}) instead of the junction-to-case thermal resistance ($R_{\Theta JC}$) can greatly improve the accuracy of the junction temperature estimation. The majority of the thermal energy of most ICs is released into the PCB through the package leads, whereas only a small percentage of the total energy is released through the top of the case (where thermocouple measurements are usually conducted). $R_{\Theta JC}$ can only be used effectively when most of the thermal energy is released through the case, such as with metal packages or when a heatsink is applied to an IC package. In all other cases, use of $R_{\Theta JC}$ will inaccurately estimate the true junction temperature. Ψ_{JT} is experimentally derived by assuming that the amount of energy leaving through the top of the IC will be similar in both the testing environment and the application environment. As long as the recommended layout guidelines are observed, junction temperature estimates can be made accurately to within a few degrees Celsius. For more information, see the *Semiconductor and IC Package Thermal Metrics Application Report*.

9.2.2.7 Selecting VCCI, VDDA/B Capacitor

Bypass capacitors for VCCI, VDDA, and VDDB are essential for achieving reliable performance. It is recommended that one choose low ESR and low ESL surface-mount multi-layer ceramic capacitors (MLCC) with sufficient voltage ratings, temperature coefficients and capacitance tolerances. Importantly, DC bias on an MLCC will impact the actual capacitance value. For example, a 25-V, 1-µF X7R capacitor is measured to be only 500 nF when a DC bias of 15 V_{DC} is applied.

9.2.2.7.1 Selecting a VCCI Capacitor

A bypass capacitor connected to VCCI supports the transient current needed for the primary logic and the total current consumption, which is only a few mA. Therefore, a 50-V MLCC with over 100 nF is recommended for this application. If the bias power supply output is a relatively long distance from the VCCI pin, a tantalum or electrolytic capacitor, with a value over 1 µF, should be placed in parallel with the MLCC.

9.2.2.7.2 Selecting a VDDA (Bootstrap) Capacitor

A VDDA capacitor, also referred to as a *bootstrap capacitor* in bootstrap power supply configurations, allows for gate drive current transients up to 6 A, and needs to maintain a stable gate drive voltage for the power transistor.

The total charge needed per switching cycle can be estimated with

$$Q_{Total} = Q_G + \frac{I_{VDD}@100kHz(\text{No Load})}{f_{SW}} = 60nC + \frac{1.5mA}{100kHz} = 75nC \tag{19}$$

where

- Q_{Total}: Total charge needed
- Q_G: Gate charge of the power transistor.
- I_{VDD}: The channel self-current consumption with no load at 100kHz.
- f_{SW}: The switching frequency of the gate driver

Therefore, the absolute minimum C_{Boot} requirement is:

$$C_{Boot} = \frac{Q_{Total}}{\Delta V_{VDDA}} = \frac{75nC}{0.5V} = 150nF \tag{20}$$

where

- ΔV_{VDDA} is the voltage ripple at VDDA, which is 0.5 V in this example.

In practice, the value of C_{Boot} is greater than the calculated value. This allows for the capacitance shift caused by the DC bias voltage and for situations where the power stage would otherwise skip pulses due to load transients. Therefore, it is recommended to include a safety-related margin in the C_{Boot} value and place it as close to the VDD and VSS pins as possible. A 50-V 1-µF capacitor is chosen in this example.

$$C_{Boot} = 1\mu F \tag{21}$$

Care should be taken when selecting the bootstrap capacitor to ensure that the VDD to VSS voltage does not drop below the recommended minimum operating level listed in section 6.3. The value of the bootstrap capacitor should be sized such that it can supply the initial charge to switch the power device, and then continuously supply the gate driver quiescent current for the duration of the high-side on-time.

If the high-side supply voltage drops below the UVLO falling threshold, the high-side gate driver output will turn off and switch the power device off. Uncontrolled hard-switching of power devices can cause high di/dt and high dv/dt transients on the output of the driver and may result in permanent damage to the device.

To further lower the AC impedance for a wide frequency range, it is recommended to have bypass capacitor placed very close to VDDx - VSSx pins with a low ESL/ESR. In this example a 100 nF, X7R ceramic capacitor, is placed in parallel with C_{Boot} to optimize the transient performance.

Note

Too large C_{BOOT} is not good. C_{BOOT} may not be charged within the first few cycles and V_{BOOT} could stay below UVLO. As a result, the high-side FET does not follow input signal command. Also during initial C_{BOOT} charging cycles, the bootstrap diode has highest reverse recovery current and losses.

Copyright © 2024 Texas Instruments Incorporated

9.2.2.7.3 Select a VDDB Capacitor

Chanel B has the same current requirements as Channel A, Therefore, a VDDB capacitor (Shown as C_{VDD} in Figure 9-1) is needed. In this example with a bootstrap configuration, the VDDB capacitor will also supply current for VDDA through the bootstrap diode. A 50-V, 10-µF MLCC and a 50-V, 220-nF MLCC are chosen for C_{VDD}. If the bias power supply output is a relatively long distance from the VDDB pin, a tantalum or electrolytic capacitor, with a value over 10 µF, should be used in parallel with CVDD.

9.2.2.8 Dead Time Setting Guidelines

For power converter topologies utilizing half-bridges, the dead time setting between the top and bottom transistor is important for preventing shoot-through during dynamic switching.

The UCC21520 dead time specification in the electrical table is defined as the time interval from 90% of one channel's falling edge to 10% of the other channel's rising edge (see Figure 7-4). This definition ensures that the dead time setting is independent of the load condition, and guarantees linearity through manufacture testing. However, this dead time setting may not reflect the dead time in the power converter system, since the dead time setting is dependent on the external gate drive turn-on/off resistor, DC-Link switching voltage/current, as well as the input capacitance of the load transistor.

Here is a suggestion on how to select an appropriate dead time for UCC21520:

$$DT_{Setting} = DT_{Req} + T_{F_Sys} + T_{R_Sys} - T_{D(on)} \tag{22}$$

where

- $DT_{setting}$: UCC21520 dead time setting in ns, $DT_{Setting}$ = 10 × RDT(in kΩ).
- DT_{Req}: System required dead time between the real V_{GS} signal of the top and bottom switch with enough margin, or ZVS requirement.
- T_{F_Sys}: In-system gate turn-off falling time at worst case of load, voltage/current conditions.
- T_{R_Sys}: In-system gate turn-on rising time at worst case of load, voltage/current conditions.
- $T_{D(on)}$: Turn-on delay time, from 10% of the transistor gate signal to power transistor gate threshold.

In the example, $DT_{Setting}$ is set to 250 ns.

It should be noted that the UCC21520 dead time setting is decided by the DT pin configuration (see Section 8.4.2), and it cannot automatically fine-tune the dead time based on system conditions. It is recommended to parallel a ceramic capacitor, ≤1nF, close to the DT pin with R_{DT} to achieve better noise immunity.

9.2.2.9 Application Circuits with Output Stage Negative Bias

When parasitic inductances are introduced by non-ideal PCB layout and long package leads (for example, TO-220 and TO-247 type packages), there could be ringing in the gate-source drive voltage of the power transistor during high di/dt and dv/dt switching. If the ringing is over the threshold voltage, there is the risk of unintended turn-on and even shoot-through. Applying a negative bias on the gate drive is a popular way to keep such ringing below the threshold. Below are a few examples of implementing negative gate drive bias.

Figure 9-2 shows the first example with negative bias turn-off on the channel-A driver using a Zener diode on the isolated power supply output stage. The negative bias is set by the Zener diode voltage. If the isolated power supply, V_A, is equal to 25 V, the turn-off voltage will be –5.1 V and turn-on voltage will be 25 V – 5.1 V ≈ 20 V. The channel-B driver circuit is the same as channel-A, therefore, this configuration needs two power supplies for a half-bridge configuration, and there will be steady state power consumption from R_Z.

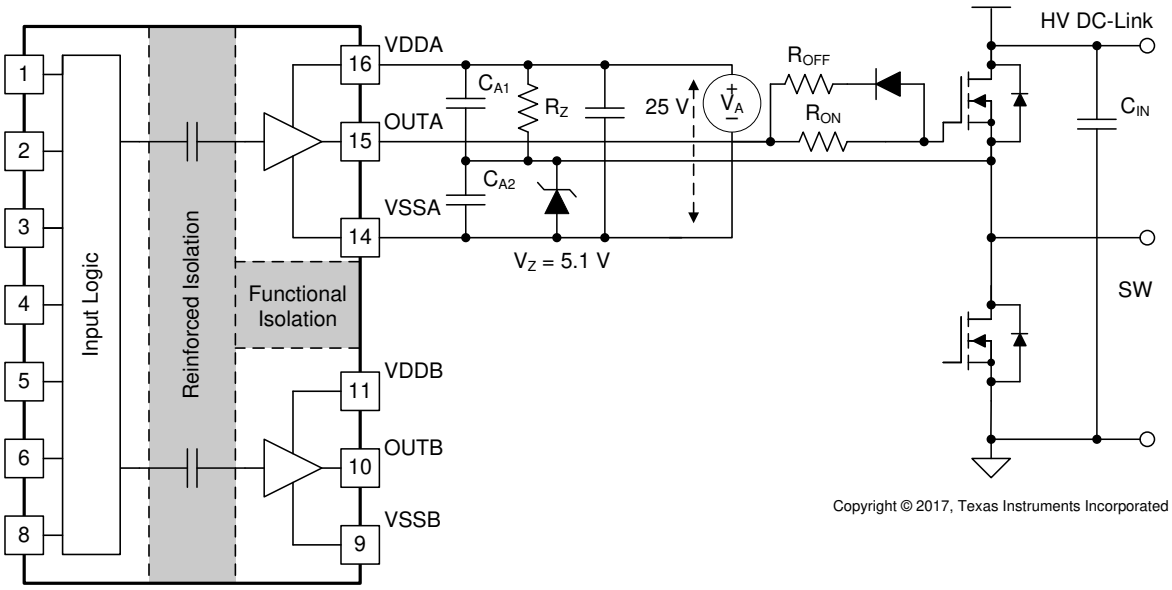

Figure 9-2. Negative Bias with Zener Diode on Iso-Bias Power Supply Output

Copyright © 2024 Texas Instruments Incorporated

Figure 9-3 shows another example which uses two supplies (or single-input-double-output power supply). Power supply V_{A+} determines the positive drive output voltage and V_{A-} determines the negative turn-off voltage. The configuration for channel B is the same as channel A. This solution requires more power supplies than the first example, however, it provides more flexibility when setting the positive and negative rail voltages.

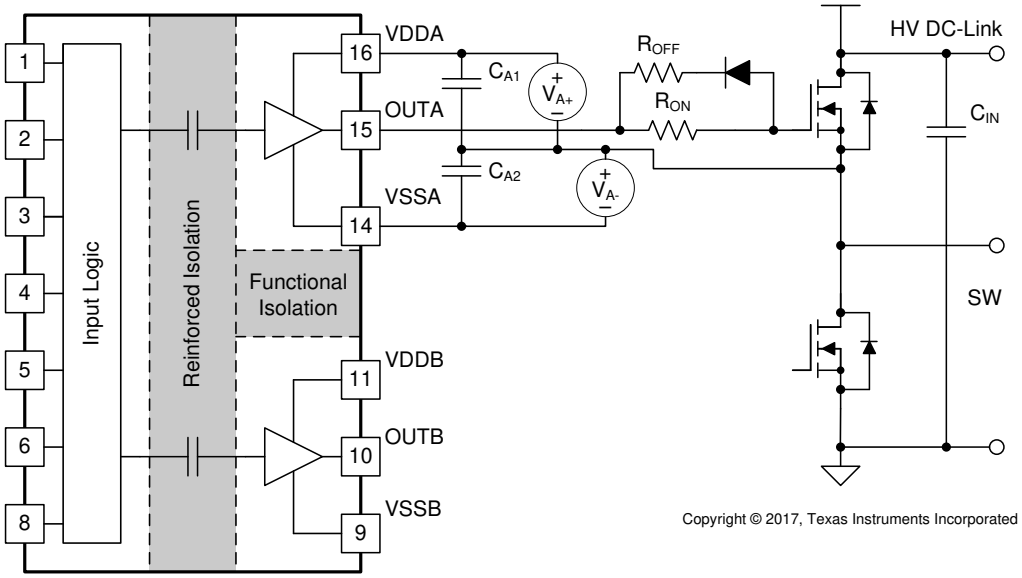

Figure 9-3. Negative Bias with Two Iso-Bias Power Supplies

The last example, shown in Figure 9-4, is a single power supply configuration and generates negative bias through a Zener diode in the gate drive loop. The benefit of this solution is that it only uses one power supply and the bootstrap power supply can be used for the high side drive. This design requires the least cost and design effort among the three solutions. However, this solution has limitations:

1. The negative gate drive bias is not only determined by the Zener diode, but also by the duty cycle, which means the negative bias voltage will change when the duty cycle changes. Therefore, converters with a fixed duty cycle (~50%) such as variable frequency resonant convertors or phase shift convertors favor this solution.
2. The high side VDDA-VSSA must maintain enough voltage to stay in the recommended power supply range, which means the low side switch must turn-on or have free-wheeling current on the body (or anti-parallel) diode for a certain period during each switching cycle to refresh the bootstrap capacitor. Therefore, a 100% duty cycle for the high side is not possible unless there is a dedicated power supply for the high side, like in the other two example circuits.

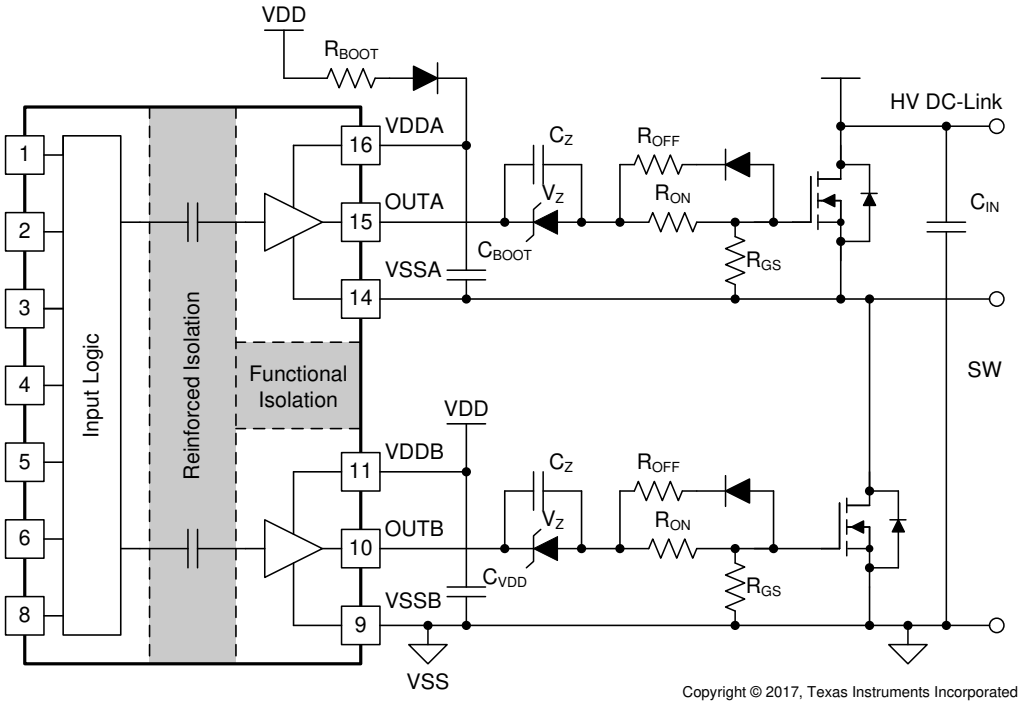

Figure 9-4. Negative Bias with Single Power Supply and Zener Diode in Gate Drive Path

Copyright © 2024 Texas Instruments Incorporated

9.2.3 Application Curves

Figure 9-5 and Figure 9-6 shows the bench test waveforms for the design example shown in Figure 9-1 under these conditions: VCC = 5 V, VDD = 20 V, f_{SW} = 100 kHz, $V_{DC\text{-}Link}$ = 0 V.

Channel 1 (Yellow): UCC21520 INA pin signal.

Channel 2 (Blue): UCC21520 INB pin signal.

Channel 3 (Pink): Gate-source signal on the high side power transistor.

Channel 4 (Green): Gate-source signal on the low side power transistor.

In Figure 9-5, INA and INB are sent complimentary 3.3-V, 50% duty-cycle signals. The gate drive signals on the power transistor have a 250-ns dead time, shown in the measurement section of Figure 9-5. The dead-time matching is less than 1 ns with the 250-ns dead-time setting.

Figure 9-6 shows a zoomed-in version of the waveform of Figure 9-5, with measurements for propagation delay and rising/falling time. Cursors are also used to measure dead time. Importantly, the output waveform is measured between the power transistors' gate and source pins, and is not measured directly from the driver OUTA and OUTB pins. Due to the split on and off resistors (R_{on},R_{off}) and different sink and source currents, different rising (16 ns) and falling time (9 ns) are observed in Figure 9-6.

Figure 9-5. Bench Test Waveform for INA/B and OUTA/B

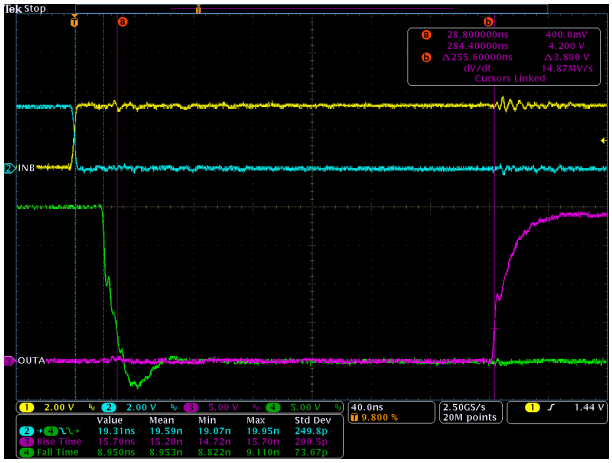

Figure 9-6. Zoomed-In Bench Test Waveform

10 Power Supply Recommendations

The recommended input supply voltage (VCCI) for the UCC21520 and the UCC21520A is between 3 V and 18 V. The output bias supply voltage (VDDA/VDDB) range depends on which version of UCC21520 one is using. The lower end of this bias supply range is governed by the internal under voltage lockout (UVLO) protection feature of each device. One mustn't let VDD or VCCI fall below their respective UVLO thresholds (For more information on UVLO see Section 8.3.1). The upper end of the VDDA/VDDB range depends on the maximum gate voltage of the power device being driven by the UCC21520 and the UCC21520A. The UCC21520 and the UCC21520A have a recommended maximum VDDA/VDDB of 25 V.

A local bypass capacitor should be placed between the VDD and VSS pins. This capacitor should be positioned as close to the device as possible. A low ESR, ceramic surface mount capacitor is recommended. It is further suggested that one place two such capacitors: one with a value of ≈10-µF for device biasing, and an additional ≤100-nF capacitor in parallel for high frequency filtering.

Similarly, a bypass capacitor should also be placed between the VCCI and GND pins. Given the small amount of current drawn by the logic circuitry within the input side of the UCC21520 and the UCC21520A, this bypass capacitor has a minimum recommended value of 100 nF.

Copyright © 2024 Texas Instruments Incorporated

11 Layout

11.1 Layout Guidelines

One must pay close attention to PCB layout in order to achieve optimum performance for the UCC21520 and the UCC21520A. Below are some key points.

Component Placement:

- Low-ESR and low-ESL capacitors must be connected close to the device between the VCCI and GND pins and between the VDD and VSS pins to support high peak currents when turning on the external power transistor.
- To avoid large negative transients on the switch node VSSA (HS) pin, the parasitic inductances between the source of the top transistor and the source of the bottom transistor must be minimized.
- It is recommended to place the dead-time setting resistor, R_{DT}, and its bypassing capacitor close to DT pin of the UCC21520 or the UCC21520A.
- It is recommended to bypass using a ≈1nF low ESR/ESL capacitor, C_{DIS}, close to DIS pin when connecting to a µC with distance.

Grounding Considerations:

- It is essential to confine the high peak currents that charge and discharge the transistor gates to a minimal physical area. This will decrease the loop inductance and minimize noise on the gate terminals of the transistors. The gate driver must be placed as close as possible to the transistors.
- Pay attention to high current path that includes the bootstrap capacitor, bootstrap diode, local VSSB-referenced bypass capacitor, and the low-side transistor body/anti-parallel diode. The bootstrap capacitor is recharged on a cycle-by-cycle basis through the bootstrap diode by the VDD bypass capacitor. This recharging occurs in a short time interval and involves a high peak current. Minimizing this loop length and area on the circuit board is important for ensuring reliable operation.

High-Voltage Considerations:

- To ensure isolation performance between the primary and secondary side, one should avoid placing any PCB traces or copper below the driver device. A PCB cutout is recommended in order to prevent contamination that may compromise the isolation performance of the UCC21520 and the UCC21520A.
- For half-bridge, or high-side/low-side configurations, where the channel A and channel B drivers could operate with a DC-link voltage up to 1500 V_{DC}, one should try to increase the creepage distance of the PCB layout between the high and low-side PCB traces.

Thermal Considerations:

- A large amount of power may be dissipated by the UCC21520 or the UCC21520A if the driving voltage is high, the load is heavy, or the switching frequency is high (refer to Section 9.2.2.5 for more details). Proper PCB layout can help dissipate heat from the device to the PCB and minimize junction to board thermal impedance (θ_{JB}).
- Increasing the PCB copper connecting to VDDA, VDDB, VSSA and VSSB pins is recommended, with priority on maximizing the connection to VSSA and VSSB (see Figure 11-2 and Figure 11-3). However, high voltage PCB considerations mentioned above must be maintained.
- If there are multiple layers in the system, it is also recommended to connect the VDDA, VDDB, VSSA and VSSB pins to internal ground or power planes through multiple vias of adequate size. However, keep in mind that there shouldn't be any traces/coppers from different high voltage planes overlapping.

Copyright © 2024 Texas Instruments Incorporated

11.2 Layout Example

Figure 11-1 shows a 2-layer PCB layout example with the signals and key components labeled.

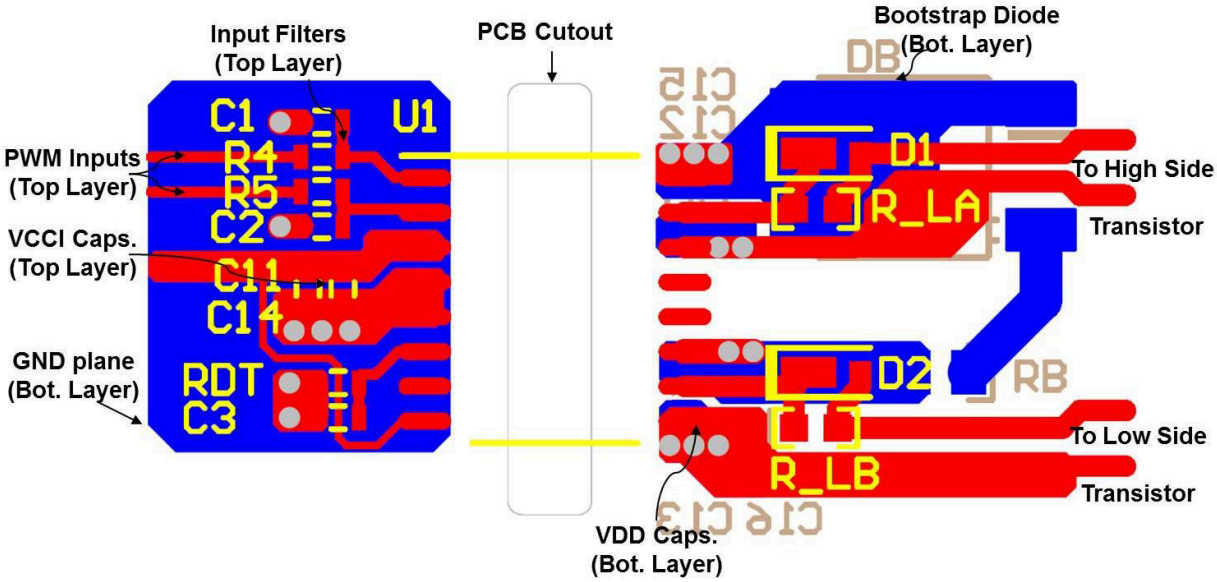

Figure 11-1. Layout Example

Figure 11-2 and Figure 11-3 shows top and bottom layer traces and copper.

Note

There are no PCB traces or copper between the primary and secondary side, which ensures isolation performance.

Copyright © 2024 Texas Instruments Incorporated

PCB traces between the high-side and low-side gate drivers in the output stage are increased to maximize the creepage distance for high-voltage operation, which will also minimize cross-talk between the switching node VSSA (SW), where high dv/dt may exist, and the low-side gate drive due to the parasitic capacitance coupling.

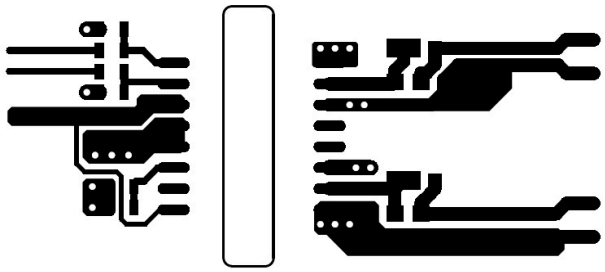

Figure 11-2. Top Layer Traces and Copper

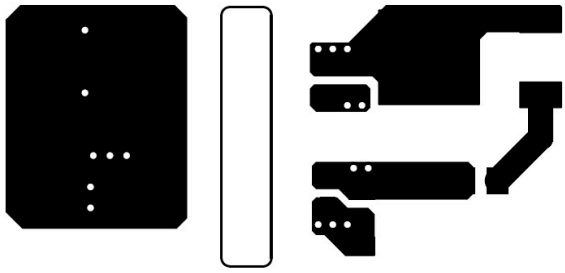

Figure 11-3. Bottom Layer Traces and Copper

Note

The location of the PCB cutout between the primary side and secondary sides, which ensures isolation performance.

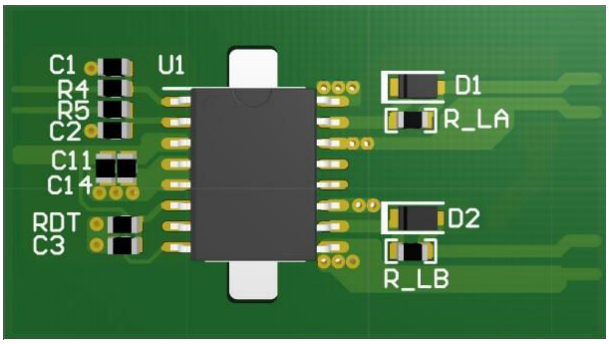

Figure 11-4. 3-D PCB Top View

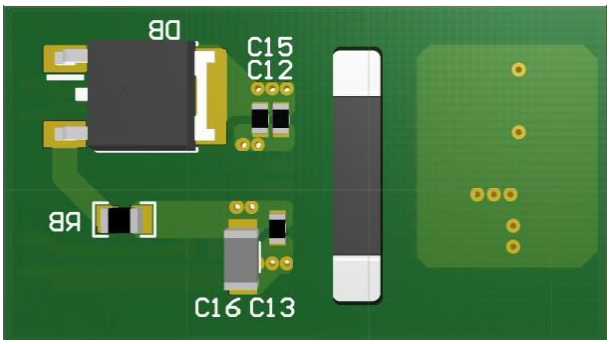

Figure 11-5. 3-D PCB Bottom View

12 Device and Documentation Support

12.1 Third-Party Products Disclaimer

TI'S PUBLICATION OF INFORMATION REGARDING THIRD-PARTY PRODUCTS OR SERVICES DOES NOT CONSTITUTE AN ENDORSEMENT REGARDING THE SUITABILITY OF SUCH PRODUCTS OR SERVICES OR A WARRANTY, REPRESENTATION OR ENDORSEMENT OF SUCH PRODUCTS OR SERVICES, EITHER ALONE OR IN COMBINATION WITH ANY TI PRODUCT OR SERVICE.

12.2 Documentation Support

12.2.1 Related Documentation

For related documentation see the following:

- *Semiconductor and IC Package Thermal Metrics Application Report*
- Isolation Glossary

12.3 Certifications

UL Online Certifications Directory, *"FPPT2.E181974 Nonoptical Isolating Devices - Component"* Certificate Number: 20160516-E181974,

VDE Pruf- und Zertifizierungsinstitut Certification, Certificate of Conformity with Factory Surveillance

CQC Online Certifications Directory, "GB4943.1-2011, Digital Isolator Certificate" Certificate Number:CQC16001155011

CSA Online Certifications Directory, "CSA Certificate of Compliance" Certificate Number:70097761, Master Contract Number:220991

12.4 Receiving Notification of Documentation Updates

To receive notification of documentation updates, navigate to the device product folder on ti.com. Click on *Notifications* to register and receive a weekly digest of any product information that has changed. For change details, review the revision history included in any revised document.

12.5 Support Resources

TI E2E™ support forums are an engineer's go-to source for fast, verified answers and design help — straight from the experts. Search existing answers or ask your own question to get the quick design help you need.

Linked content is provided "AS IS" by the respective contributors. They do not constitute TI specifications and do not necessarily reflect TI's views; see TI's Terms of Use.

12.6 Trademarks

TI E2E™ is a trademark of Texas Instruments.
All trademarks are the property of their respective owners.

12.7 Electrostatic Discharge Caution

This integrated circuit can be damaged by ESD. Texas Instruments recommends that all integrated circuits be handled with appropriate precautions. Failure to observe proper handling and installation procedures can cause damage.

ESD damage can range from subtle performance degradation to complete device failure. Precision integrated circuits may be more susceptible to damage because very small parametric changes could cause the device not to meet its published specifications.

12.8 Glossary

TI Glossary	This glossary lists and explains terms, acronyms, and definitions.

13 Revision History

NOTE: Page numbers for previous revisions may differ from page numbers in the current version.

Copyright © 2024 Texas Instruments Incorporated

Changes from Revision E (December 2021) to Revision F (November 2024) **Page**

- Updated the numbering format for tables, figures, and cross-references throughout the document..... 1
- Deleted 5ns maximum delay matching from Features section..... 1
- Changed Typ propagation delay from 19ns to 33ns..... 1
- Changed 10ns minmum pulse width to 20ns..... 1
- Changed operating temperature range to junction temeperature range..... 1
- Changed CMTI specification from 100V/ns to 125V/ns..... 1
- Changed surge immunity value from 12.8kV to 10kV..... 1
- Deleted bullet on isolation barrier life >40 years..... 1
- Deleted "Rejects input pulses and noise transients shorter than 5ns"..... 1
- Updated safety certifications to latest standards..... 1
- Deleted CSA certification..... 1
- Updated Description section to match new spec values..... 1
- Updated DT pin description to recommend ≤1nF capacitor on DT pin..... 4
- Changed DT pin Min resistor recommendations from 500Ω to 2kΩ..... 4
- Updated ESD spec from HBM = ±4000 and CDM = ±1500 to HBM = ±2000 and CDM = ±1000 to match ESD industry standards..... 5
- Deleted ambient temperature spec..... 5
- Changed Max junction temp to 150C..... 5
- Updated values from RθJA = 67.3°C/W, RθJC(top) = 34.4°C/W, RθJB = 32.1°C/W, ψJT = 18°C/W, ψJB = 31.6°C/W to RθJA = 69.8°C/W, RθJC(top) = 33.1°C/W, RθJB = 36.9°C/W, ψJT = 22.2°C/W, ψJB = 36°C/W.. 5
- Updated values from PD = 1.05W, PDI = 0.05W, PDA/PDB = 0.5W to PD = 950mW, PDI = 50mW, PDA/PDB = 450mW..... 6
- Updated values from DTI = 21mm, VIOSM = 8000VPK to DTI = 17mm, VIOSM = 10000VPK and added VIMP = 7692VPK..... 7
- Deleted safety related certifications section..... 7
- Updated values from IS = 75mA/36mA, PS = 50mW/900mW/900mW/1850mW to IS = 58mA/34mA, PS = 50mW/870mW/870mW/1790mW..... 8
- Changed test condition from VDDA=VDDB=12V to VDDA=VDDB=15V..... 8
- Updated IVCCI quiescent current spec 1.4mA typical value to 1.5mA typical..... 8
- Updated IVDDA/IVDDB quiescent current spec Max value from 1.8mA to 2.5mA..... 8
- Updated IVCCI operating current Typ value from 2.0mA to 3.0mA and added Max value 3.5mA..... 8
- Added IVDDA/IVDDB operating current Max = 4.2mA..... 8
- Updated values from Rising threshold Min = 8.3V, Typ = 8.7V, Max = 9.2V to Min = 7.7V, Typ = 8.5V, Max = 8.9V..... 8
- Updated values from Falling threshold Min = 7.8V, Typ = 8.2V, Max = 8.7V to Min = 7.2V, Typ = 7.9V, Max = 8.4V..... 8
- Updated 8-V UVLO hysteresis typ = 0.5V to 0.6V..... 8
- Updated Input high threshold Min value from 1.6V to 1.2V..... 8
- Changed output voltage at high state spec from 11.95V Typ to 14.95V Typ. Changed test condition from VDDA=VDDB=15V to VDDA=VDDB=12V. 8
- Deleted Dead time parameter from Electrical Characteristics and added new Timing Requirements..... 9
- Changed propagation delay TPDHL and TPDLH from Min=14ns, Typ = 19ns, Max = 30ns to Min=26ns. Typ = 33ns, Max = 45ns..... 9
- Changed propagation delay matching from Max = 5ns to Max = 6.5ns from TJ = -40C to -10C and Max = 5ns from TJ = -10C to 150C..... 9
- Added VCCI power up delay..... 9
- Updated VDDA/VDDB power-up delay from Max = 100us to 10us..... 9
- Updated CMTI from Min = 100V/ns to 125V/ns..... 9
- Updated insulation and thermal curves to match updated characteristics..... 10
- Updated typical characteristics figures..... 11
- Updated Power-up UVLO Delay to OUTPUT section to match device electrical characteristics 16
- Changed the Functional Block Diagram to add deglitch filter block..... 18

Copyright © 2024 Texas Instruments Incorporated

- Changed DISABLE logic; DISABLE left open will pull outputs low....21
- Added paragraph on minimum pulse width to Output Stage section....22
- Updated ESD diode structure....23
- Updated DT Pin Connected to a Programming Resistor Between DT and GND Pins section to recommend <=1nF capacitor on DT pin. 24
- Updated typical schematic DT pin capacitor recommendation 26
- Updated Dead Time Setting Guidelines section to recommend <=1nF capacitor on DT pin. 33

Changes from Revision D (March 2020) to Revision E (December 2021) **Page**

- Updated Features 1

Changes from Revision C (December 2019) to Revision D (March 2020) **Page**

- Changed DT pin description....4
- Changed DT pin configuration recommendations 24
- Added update to bootstrap circuit recommendations....27
- Added update to gate resistor selection recommendations 28
- Added gate to source resistor recommendation 29
- Added update to Cboot selection recommendations 31

14 Mechanical, Packaging, and Orderable Information

The following pages include mechanical, packaging, and orderable information. This information is the most current data available for the designated devices. This data is subject to change without notice and revision of this document. For browser-based versions of this data sheet, refer to the left-hand navigation.

Copyright © 2024 Texas Instruments Incorporated

PACKAGING INFORMATION

Orderable part number	Status (1)	Material type (2)	Package | Pins	Package qty | Carrier	RoHS (3)	Lead finish/ Ball material (4)	MSL rating/ Peak reflow (5)	Op temp (°C)	Part marking (6)
UCC21520ADW	Obsolete	Production	SOIC (DW) | 16	-	-	Call TI	Call TI	-40 to 125	UCC21520A
UCC21520ADWR	Active	Production	SOIC (DW) | 16	2000 | LARGE T&R	Yes	NIPDAU	Level-2-260C-1 YEAR	-40 to 125	UCC21520A
UCC21520ADWR.A	Active	Production	SOIC (DW) | 16	2000 | LARGE T&R	Yes	NIPDAU	Level-2-260C-1 YEAR	-40 to 125	UCC21520A
UCC21520ADWR.B	Active	Production	SOIC (DW) | 16	2000 | LARGE T&R	Yes	NIPDAU	Level-2-260C-1 YEAR	-40 to 125	UCC21520A
UCC21520DW	Obsolete	Production	SOIC (DW) | 16	-	-	Call TI	Call TI	-40 to 125	UCC21520
UCC21520DWR	Active	Production	SOIC (DW) | 16	2000 | LARGE T&R	Yes	NIPDAU	Level-2-260C-1 YEAR	-40 to 125	UCC21520
UCC21520DWR.A	Active	Production	SOIC (DW) | 16	2000 | LARGE T&R	Yes	NIPDAU	Level-2-260C-1 YEAR	-40 to 125	UCC21520
UCC21520DWR.B	Active	Production	SOIC (DW) | 16	2000 | LARGE T&R	Yes	NIPDAU	Level-2-260C-1 YEAR	-40 to 125	UCC21520
UCC21520DWRG4	Active	Production	SOIC (DW) | 16	2000 | LARGE T&R	Yes	NIPDAU	Level-2-260C-1 YEAR	-40 to 125	UCC21520
UCC21520DWRG4.A	Active	Production	SOIC (DW) | 16	2000 | LARGE T&R	Yes	NIPDAU	Level-2-260C-1 YEAR	-40 to 125	UCC21520
UCC21520DWRG4.B	Active	Production	SOIC (DW) | 16	2000 | LARGE T&R	Yes	NIPDAU	Level-2-260C-1 YEAR	-40 to 125	UCC21520

(1) **Status:** For more details on status, see our product life cycle.

(2) **Material type:** When designated, preproduction parts are prototypes/experimental devices, and are not yet approved or released for full production. Testing and final process, including without limitation quality assurance, reliability performance testing, and/or process qualification, may not yet be complete, and this item is subject to further changes or possible discontinuation. If available for ordering, purchases will be subject to an additional waiver at checkout, and are intended for early internal evaluation purposes only. These items are sold without warranties of any kind.

(3) **RoHS values:** Yes, No, RoHS Exempt. See the TI RoHS Statement for additional information and value definition.

(4) **Lead finish/Ball material:** Parts may have multiple material finish options. Finish options are separated by a vertical ruled line. Lead finish/Ball material values may wrap to two lines if the finish value exceeds the maximum column width.

(5) **MSL rating/Peak reflow:** The moisture sensitivity level ratings and peak solder (reflow) temperatures. In the event that a part has multiple moisture sensitivity ratings, only the lowest level per JEDEC standards is shown. Refer to the shipping label for the actual reflow temperature that will be used to mount the part to the printed circuit board.

(6) **Part marking:** There may be an additional marking, which relates to the logo, the lot trace code information, or the environmental category of the part.

Multiple part markings will be inside parentheses. Only one part marking contained in parentheses and separated by a "~" will appear on a part. If a line is indented then it is a continuation of the previous line and the two combined represent the entire part marking for that device.

Important Information and Disclaimer: The information provided on this page represents TI's knowledge and belief as of the date that it is provided. TI bases its knowledge and belief on information provided by third parties, and makes no representation or warranty as to the accuracy of such information. Efforts are underway to better integrate information from third parties. TI has taken and continues to take reasonable steps to provide representative and accurate information but may not have conducted destructive testing or chemical analysis on incoming materials and chemicals. TI and TI suppliers consider certain information to be proprietary, and thus CAS numbers and other limited information may not be available for release.

In no event shall TI's liability arising out of such information exceed the total purchase price of the TI part(s) at issue in this document sold by TI to Customer on an annual basis.

OTHER QUALIFIED VERSIONS OF UCC21520 :

- Automotive : UCC21520-Q1

NOTE: Qualified Version Definitions:

- Automotive - Q100 devices qualified for high-reliability automotive applications targeting zero defects

TAPE AND REEL INFORMATION

REEL DIMENSIONS

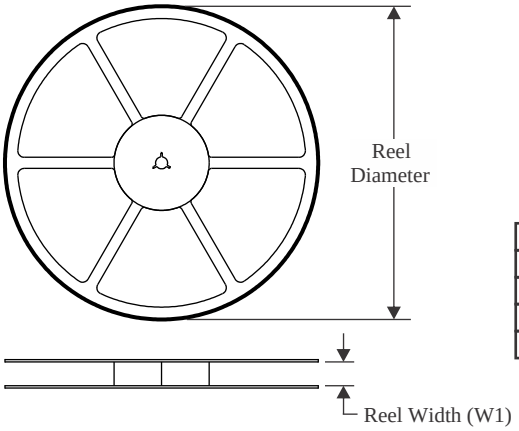

TAPE DIMENSIONS

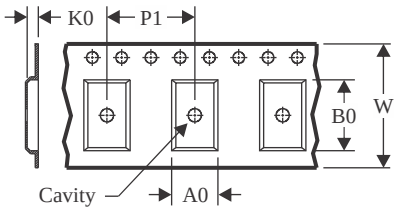

A0	Dimension designed to accommodate the component width
B0	Dimension designed to accommodate the component length
K0	Dimension designed to accommodate the component thickness
W	Overall width of the carrier tape
P1	Pitch between successive cavity centers

QUADRANT ASSIGNMENTS FOR PIN 1 ORIENTATION IN TAPE

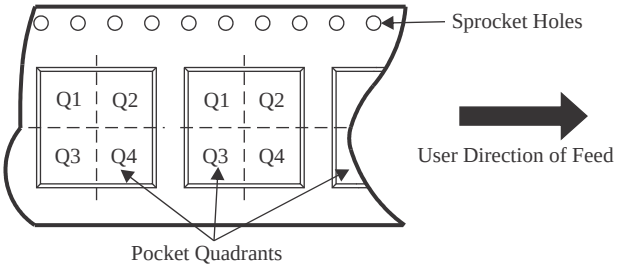

*All dimensions are nominal

Device	Package Type	Package Drawing	Pins	SPQ	Reel Diameter (mm)	Reel Width W1 (mm)	A0 (mm)	B0 (mm)	K0 (mm)	P1 (mm)	W (mm)	Pin1 Quadrant
UCC21520ADWR	SOIC	DW	16	2000	330.0	16.4	10.75	10.7	2.7	12.0	16.0	Q1
UCC21520ADWR	SOIC	DW	16	2000	330.0	16.4	10.75	10.7	2.7	12.0	16.0	Q1
UCC21520DWR	SOIC	DW	16	2000	330.0	16.4	10.75	10.7	2.7	12.0	16.0	Q1
UCC21520DWRG4	SOIC	DW	16	2000	330.0	16.4	10.75	10.7	2.7	12.0	16.0	Q1

TAPE AND REEL BOX DIMENSIONS

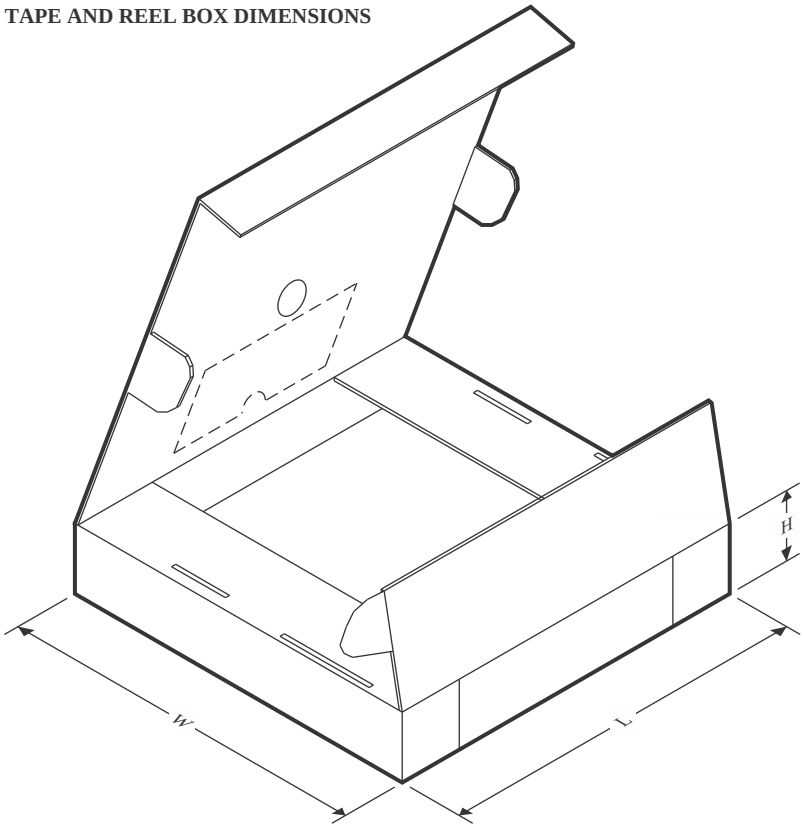

*All dimensions are nominal

Device	Package Type	Package Drawing	Pins	SPQ	Length (mm)	Width (mm)	Height (mm)
UCC21520ADWR	SOIC	DW	16	2000	353.0	353.0	32.0
UCC21520ADWR	SOIC	DW	16	2000	356.0	356.0	35.0
UCC21520DWR	SOIC	DW	16	2000	356.0	356.0	35.0
UCC21520DWRG4	SOIC	DW	16	2000	356.0	356.0	35.0

GENERIC PACKAGE VIEW

DW 16

SOIC - 2.65 mm max height

7.5 x 10.3, 1.27 mm pitch

SMALL OUTLINE INTEGRATED CIRCUIT

This image is a representation of the package family, actual package may vary.
Refer to the product data sheet for package details.

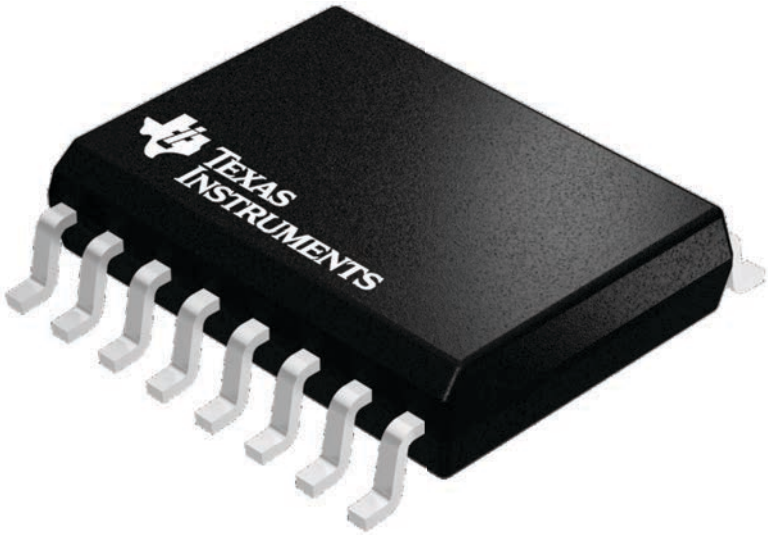

4224780/A

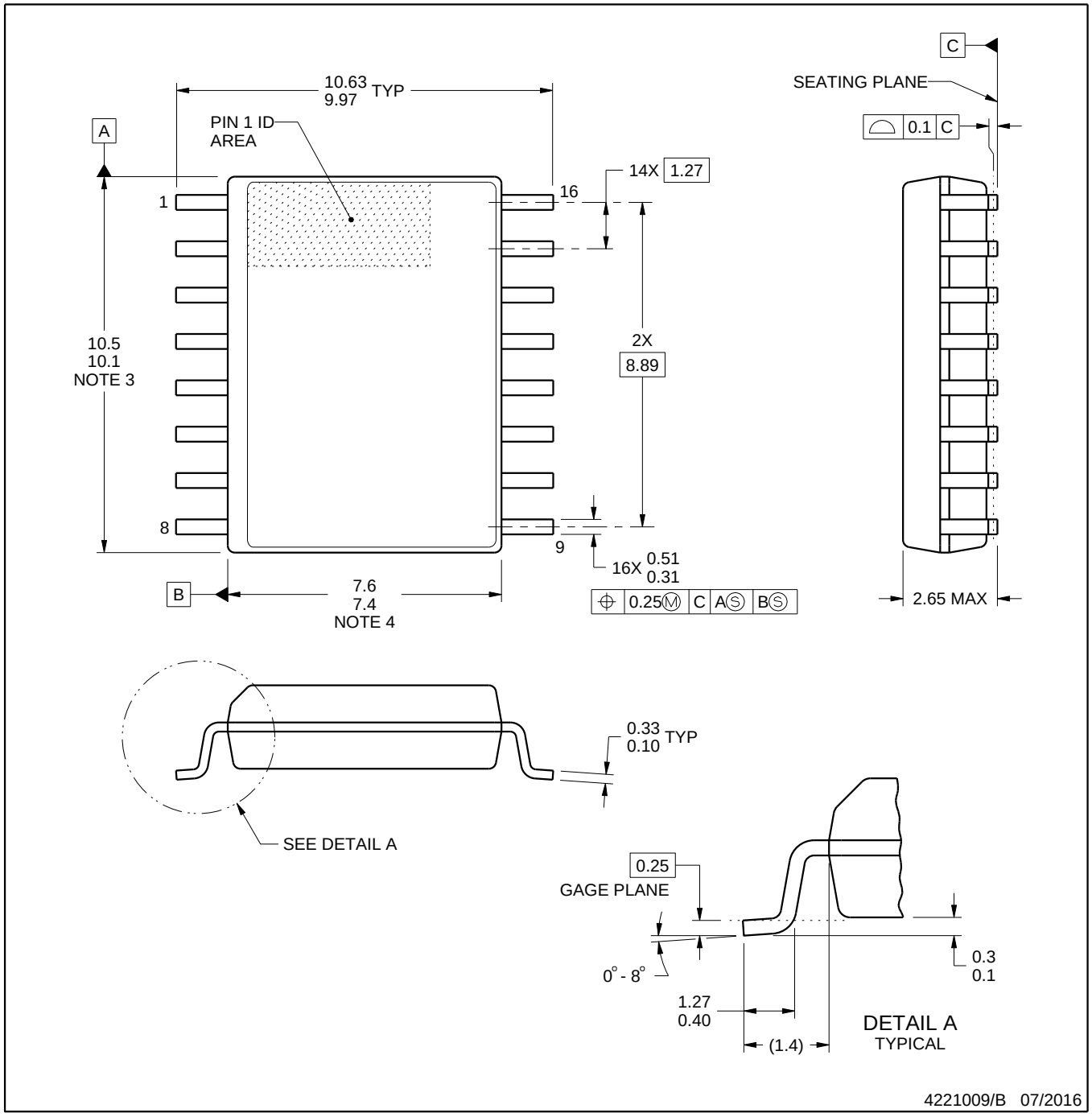

NOTES:

1. All linear dimensions are in millimeters. Dimensions in parenthesis are for reference only. Dimensioning and tolerancing per ASME Y14.5M.
2. This drawing is subject to change without notice.
3. This dimension does not include mold flash, protrusions, or gate burrs. Mold flash, protrusions, or gate burrs shall not exceed 0.15 mm, per side.
4. This dimension does not include interlead flash. Interlead flash shall not exceed 0.25 mm, per side.
5. Reference JEDEC registration MS-013.

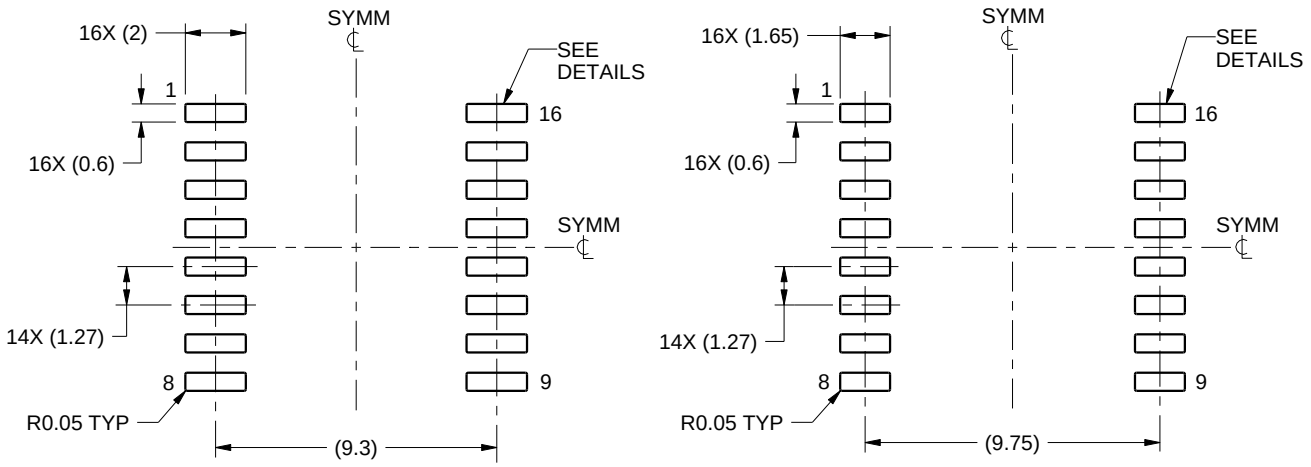

IPC-7351 NOMINAL
7.3 mm CLEARANCE/CREEPAGE

HV / ISOLATION OPTION
8.1 mm CLEARANCE/CREEPAGE

LAND PATTERN EXAMPLE
SCALE:4X

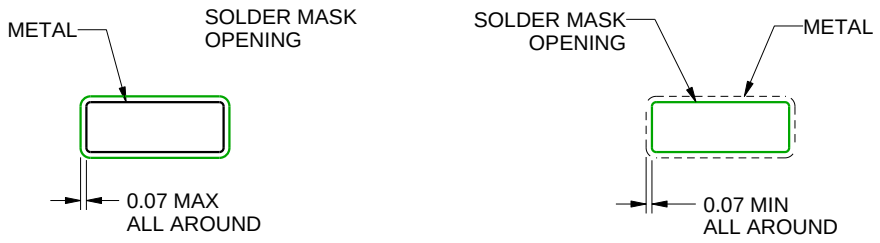

NON SOLDER MASK DEFINED

SOLDER MASK DEFINED

SOLDER MASK DETAILS

4221009/B 07/2016

NOTES: (continued)

6. Publication IPC-7351 may have alternate designs.
7. Solder mask tolerances between and around signal pads can vary based on board fabrication site.

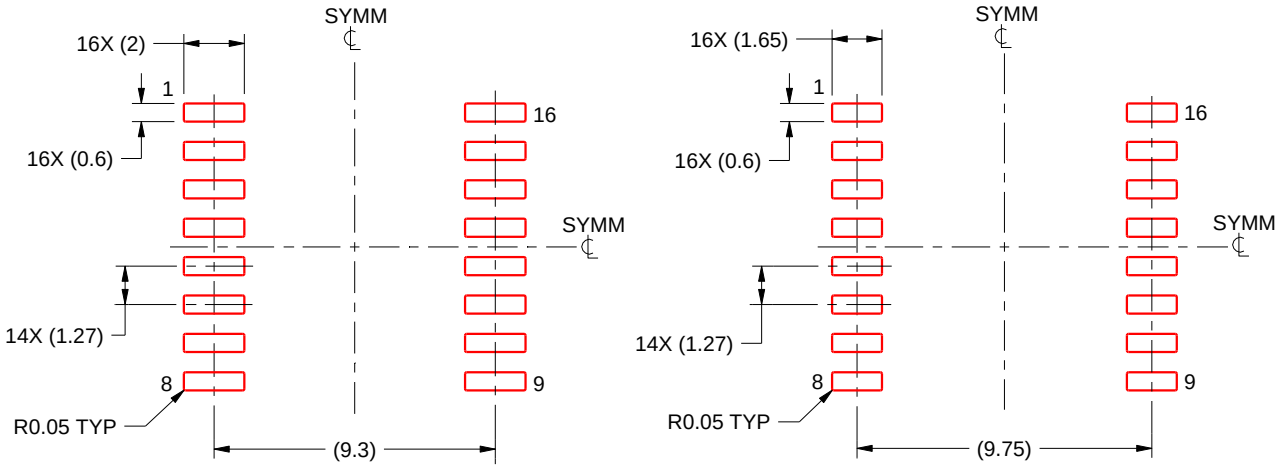

IPC-7351 NOMINAL
7.3 mm CLEARANCE/CREEPAGE

HV / ISOLATION OPTION
8.1 mm CLEARANCE/CREEPAGE

SOLDER PASTE EXAMPLE
BASED ON 0.125 mm THICK STENCIL
SCALE:4X

4221009/B 07/2016

NOTES: (continued)

8. Laser cutting apertures with trapezoidal walls and rounded corners may offer better paste release. IPC-7525 may have alternate design recommendations.
9. Board assembly site may have different recommendations for stencil design.

IMPORTANT NOTICE AND DISCLAIMER

TI PROVIDES TECHNICAL AND RELIABILITY DATA (INCLUDING DATA SHEETS), DESIGN RESOURCES (INCLUDING REFERENCE DESIGNS), APPLICATION OR OTHER DESIGN ADVICE, WEB TOOLS, SAFETY INFORMATION, AND OTHER RESOURCES “AS IS” AND WITH ALL FAULTS, AND DISCLAIMS ALL WARRANTIES, EXPRESS AND IMPLIED, INCLUDING WITHOUT LIMITATION ANY IMPLIED WARRANTIES OF MERCHANTABILITY, FITNESS FOR A PARTICULAR PURPOSE OR NON-INFRINGEMENT OF THIRD PARTY INTELLECTUAL PROPERTY RIGHTS.

These resources are intended for skilled developers designing with TI products. You are solely responsible for (1) selecting the appropriate TI products for your application, (2) designing, validating and testing your application, and (3) ensuring your application meets applicable standards, and any other safety, security, regulatory or other requirements.

These resources are subject to change without notice. TI grants you permission to use these resources only for development of an application that uses the TI products described in the resource. Other reproduction and display of these resources is prohibited. No license is granted to any other TI intellectual property right or to any third party intellectual property right. TI disclaims responsibility for, and you will fully indemnify TI and its representatives against, any claims, damages, costs, losses, and liabilities arising out of your use of these resources.

TI’s products are provided subject to TI’s Terms of Sale or other applicable terms available either on ti.com or provided in conjunction with such TI products. TI’s provision of these resources does not expand or otherwise alter TI’s applicable warranties or warranty disclaimers for TI products.

TI objects to and rejects any additional or different terms you may have proposed.

Mailing Address: Texas Instruments, Post Office Box 655303, Dallas, Texas 75265
Copyright © 2025, Texas Instruments Incorporated