TEXAS INSTRUMENTS
Data sheet acquired from Harris Semiconductor
SCHS103C – Revised July 2003

CD40160B, CD40161B, CD40162B, CD40163B Types

CMOS Synchronous Programmable 4-Bit Counters

High-Voltage Types (20-Volt Rating)

CD40160B – Decade with Asynchronous Clear
CD40161B – Binary with Asynchronous Clear
CD40162B – Decade with Synchronous Clear
CD40163B – Binary with Synchronous Clear

■ CD40160B, CD40161B, CD40162B, and CD40163B are 4-bit synchronous programmable counters. The CLEAR function of the CD40162B and CD40163B is synchronous and a low level at the $\overline{\text{CLEAR}}$ input sets all four outputs low on the next positive CLOCK edge. The CLEAR function of the CD40160B and CD40161B is asynchronous and a low level at the $\overline{\text{CLEAR}}$ input sets all four outputs low regardless of the state of the CLOCK, $\overline{\text{LOAD}}$, or ENABLE inputs. A low level at the $\overline{\text{LOAD}}$ input disables the counter and causes the output to agree with the setup data after the next CLOCK pulse regardless of the conditions of the ENABLE inputs.

The carry look-ahead circuitry provides for cascading counters for n-bit synchronous applications without additional gating. Instrumental in accomplishing this function are two count-enable inputs and a carry output (C_{OUT}). Counting is enabled when both PE and TE inputs are high. The TE input is fed forward to enable C_{OUT}. This enabled output produces a positive output pulse with a duration approximately equal to the positive portion of the Q1 output. This positive overflow carry pulse can be used to enable successive cascaded stages. Logic transitions at the PE or TE inputs may occur when the clock is either high or low.

The CD40160B types are supplied in 16-lead hermetic dual-in-line ceramic packages (F3A suffix). The CD40161B types are supplied in 16-lead hermetic dual-in-line ceramic packages (F3A suffix), 16-lead dual-in-line plastic packages (E suffix), 16-lead small-outline packages (NSR suffix), and 16-lead thin shrink small-outline packages (PW and PWR suffixes).

The CD40160B through CD40163B types are functionally equivalent to and pin-compatible with the TTL counter series 74LS160 through 74LS163 respectively.

Features:

- **Internal look-ahead for fast counting**
- **Carry output for cascading**
- **Synchronously programmable**
- **Clear asynchronous input (CD40160B, CD40161B)**
- **Clear synchronous input (CD40162B, CD40163B)**
- **Synchronous load control input**
- **Low-power TTL compatibility**
- **Standardized, symmetrical output characteristics**
- **100% tested for quiescent current at 20 V**
- **Maximum input current of 1 μA at 18 V over full package-temperature range; 100 nA at 18 V and 25°C**
- **Noise margin (over full package-temperature range): 1 V at V_{DD} = 5 V; 2 V at V_{DD} = 10 V; 2.5 V at V_{DD} = 15 V**
- **5-V, 10-V, and 15-V parametric ratings**
- **Meets all requirements of JEDEC Tentative Standard No. 13B, "Standard Specifications for Description of 'B' Series CMOS Devices"**

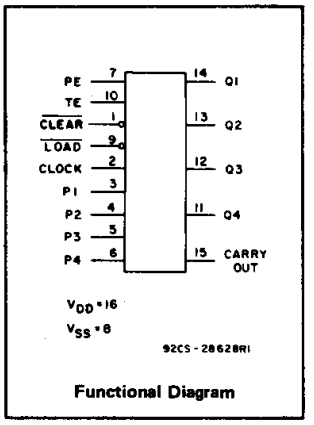

Functional Diagram

Applications:

- **Programmable binary and decade counting**
- **Counter control/timers**
- **Frequency dividing**

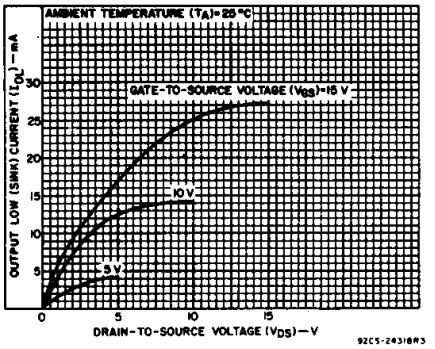

Fig. 1 – Typical output low (sink) current characteristics.

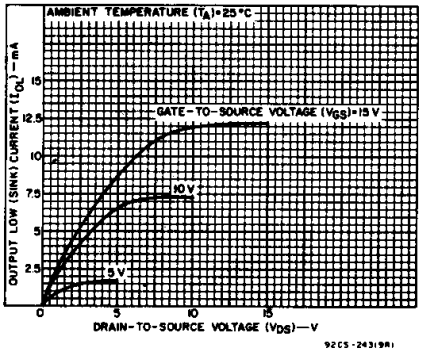

Fig. 2 – Minimum output low (sink) current characteristics.

MAXIMUM RATINGS, *Absolute-Maximum Values:*

DC SUPPLY-VOLTAGE RANGE, (V_{DD})
Voltages referenced to V_{SS} Terminal) ..... -0.5V to +20V
INPUT VOLTAGE RANGE, ALL INPUTS ..... -0.5V to V_{DD} +0.5V
DC INPUT CURRENT, ANY ONE INPUT ..... ±10mA
POWER DISSIPATION PER PACKAGE (P_D):
For T_A = -55°C to +100°C 500mW
For T_A = +100°C to +125°C ..... Derate Linearity at 12mW/°C to 200mW
DEVICE DISSIPATION PER OUTPUT TRANSISTOR
FOR T_A = FULL PACKAGE-TEMPERATURE RANGE (All Package Types) 100mW
OPERATING-TEMPERATURE RANGE (T_A) ..... -55°C to +125°C
STORAGE TEMPERATURE RANGE (T_{stg}) ..... -65°C to +150°C
LEAD TEMPERATURE (DURING SOLDERING):
At distance 1/16 ± 1/32 inch (1.59 ± 0.79mm) from case for 10s max ..... +265°C

Copyright © 2003, Texas Instruments Incorporated

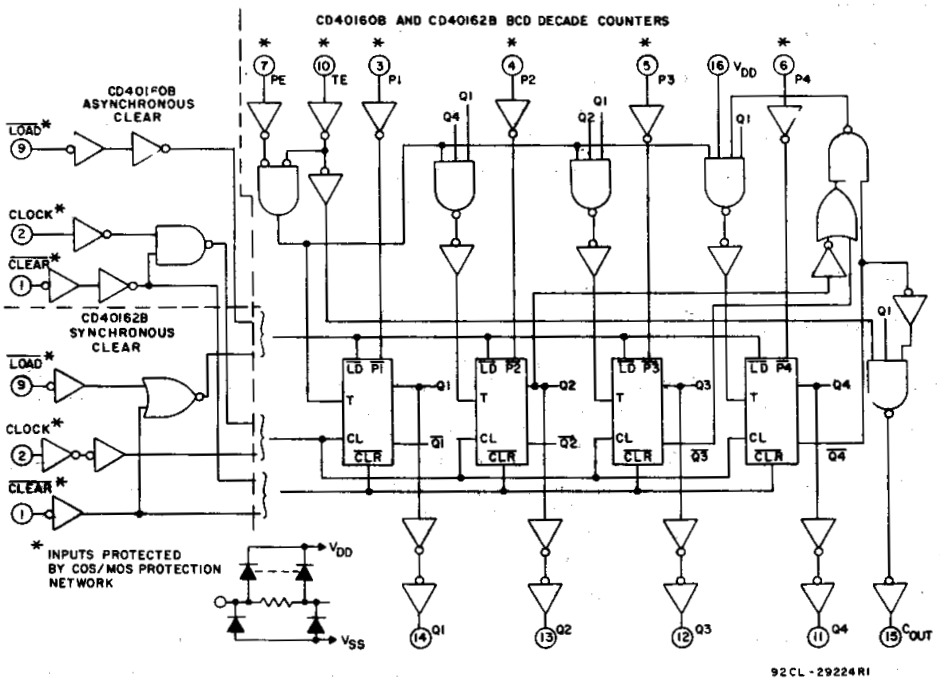

Fig. 3— Logic diagrams for CD40160B and CD40162B BCD decade counters.

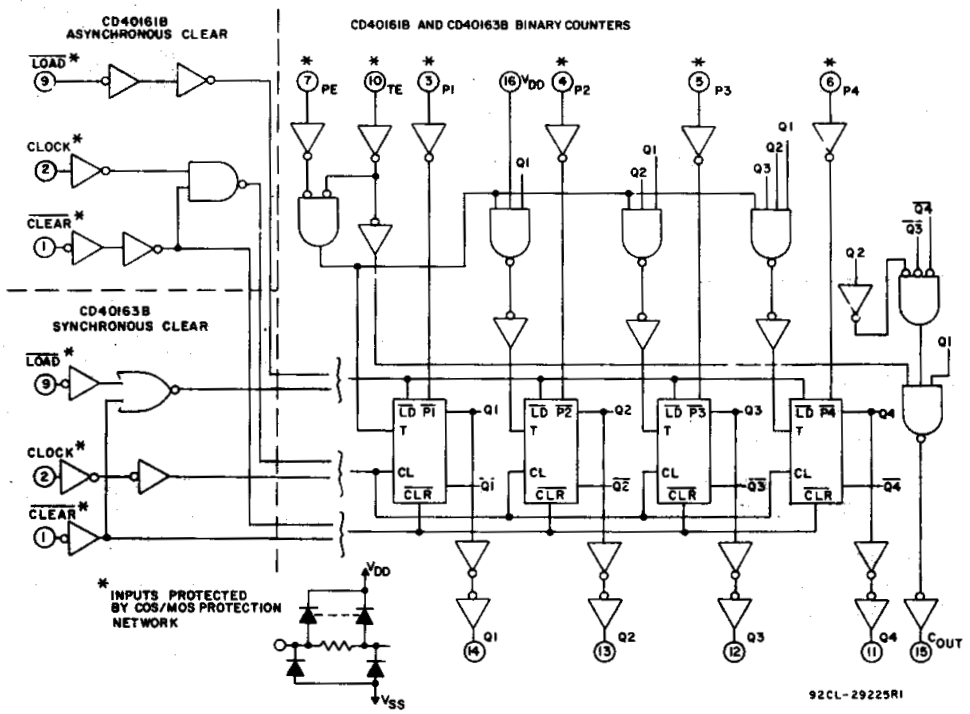

Fig. 4— Logic diagrams for CD40161B and CD40163B binary counters.

RECOMMENDED OPERATING CONDITIONS *at T_A = 25°C, Except as Noted*
For maximum reliability, nominal operating conditions should be selected so that operation is always within the following ranges:

CHARACTERISTIC	V_{DD} (V)	LIMITS MIN.	LIMITS MAX.	UNITS
Supply Voltage Range (Full T_A = Full Package-Temperature Range)	–	3	18	V
Setup Time: t_{SU} Data to Clock	5	240	–	ns
	10	90	–	
	15	60	–	
$\overline{\text{Load}}$ to Clock	5	240	–	ns
	10	90	–	
	15	60		
PE or TE to Clock	5	340	–	ns
	10	140	–	
	15	100	–	
$\overline{\text{Clear}}$ to Clock (CD40162B, CD40163B)	5	340	–	ns
	10	140	–	
	15	100		
All Hold Times, t_H	5	0	–	ns
	10	0	–	
	15	0	–	
$\overline{\text{Clear}}$ Removal Time, t_{rem} (CD40160B, CD40161B)	5	200	–	ns
	10	100	–	
	15	70	–	
$\overline{\text{Clear}}$ Pulse Width, t_{WL} (CD40160B, CD40161B)	5	170	–	ns
	10	70	–	
	15	50	–	
Clock Input Frequency, f_{CL}	5	–	2	MHz
	10	–	5.5	
	15	–	8	
Clock Pulse Width, t_W	5	170	–	ns
	10	70	–	
	15	50	–	
Clock Rise or Fall Time, t_rCL or t_fCL	5	–	200	μs
	10	–	70	
	15	–	15	

TRUTH TABLE

CLOCK	$\overline{\text{CLR}}$	$\overline{\text{LOAD}}$	PE	TE	OPERATION
↑	1	0	X	X	PRESET
↑	1	1	0	X	NC
↑	1	1	X	0	NC
↑	1	1	1	1	COUNT
X	0	X	X	X	RESET (CD40160B, CD40161B)
↑	0	X	X	X	RESET (CD40162B, CD40163B)
↓	1	X	X	X	NC (CD40162B, CD40163B)

1 = HIGH LEVEL 0 = LOW LEVEL X = DON'T CARE NC = NO CHANGE

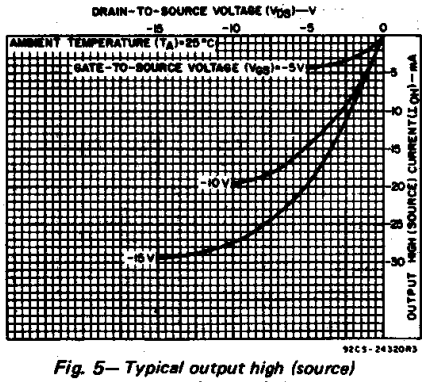

Fig. 5— Typical output high (source) current characteristics.

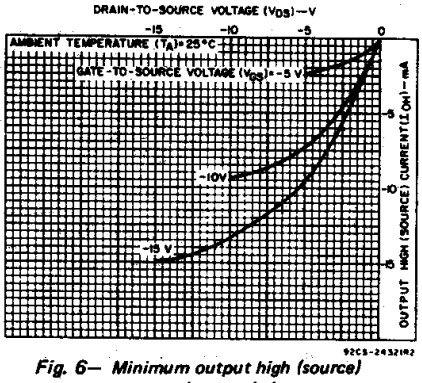

Fig. 6— Minimum output high (source) current characteristics.

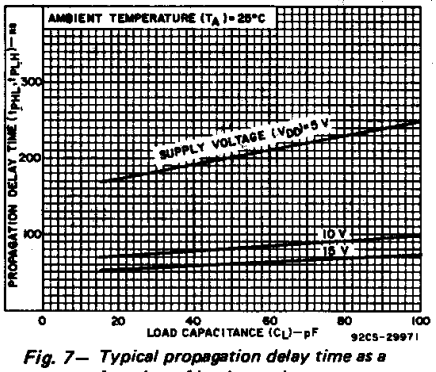

Fig. 7— Typical propagation delay time as a function of load capacitance (CLOCK to Q).

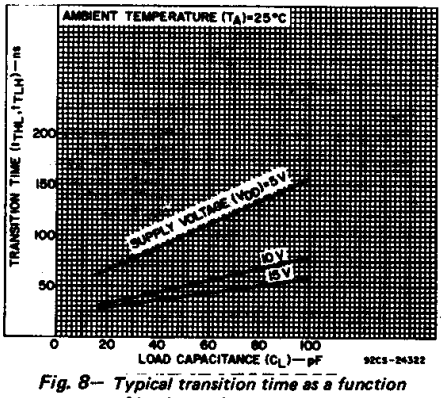

Fig. 8— Typical transition time as a function of load capacitance.

STATIC ELECTRICAL CHARACTERISTICS

CHARACTERISTIC	CONDITIONS			LIMITS AT INDICATED TEMPERATURES (°C)							UNITS
	V_O (V)	V_{IN} (V)	V_{DD} (V)	−55	−40	+85	+125	+25 Min.	+25 Typ.	+25 Max.	
Quiescent Device Current, I_{DD} Max.	–	0,5	5	5	5	150	150	–	0.04	5	μA
	–	0,10	10	10	10	300	300	–	0.04	10	
	–	0,15	15	20	20	600	600	–	0.04	20	
	–	0,20	20	100	100	3000	3000	–	0.08	100	
Output Low (Sink) Current I_{OL} Min.	0.4	0,5	5	0.64	0.61	0.42	0.36	0.51	1	–	mA
	0.5	0,10	10	1.6	1.5	1.1	0.9	1.3	2.6	–	
	1.5	0,15	15	4.2	4	2.8	2.4	3.4	6.8	–	
Output High (Source) Current, I_{OH} Min.	4.6	0,5	5	−0.64	−0.61	−0.42	−0.36	−0.51	−1	–	
	2.5	0,5	5	−2	−1.8	−1.3	−1.15	−1.6	−3.2	–	
	9.5	0,10	10	−1.6	−1.5	−1.1	−0.9	−1.3	−2.6	–	
	13.5	0,15	15	−4.2	−4	−2.8	−2.4	−3.4	−6.8	–	
Output Voltage: Low-Level, V_{OL} Max.	–	0,5	5	0.05				–	0	0.05	V
	–	0,10	10	0.05				–	0	0.05	
	–	0,15	15	0.05				–	0	0.05	
Output Voltage: High-Level, V_{OH} Min.	–	0,5	5	4.95				4.95	5	–	
	–	0,10	10	9.95				9.95	10	–	
	–	0,15	15	14.95				14.95	15	–	
Input Low Voltage V_{IL} Max.	0.5,4.5	–	5	1.5				–	–	1.5	V
	1,9	–	10	3				–	–	3	
	1.5,13.5	–	15	4				–	–	4	
Input High Voltage, V_{IH} Min.	0.5,4.5	–	5	3.5				3.5	–	–	
	1,9	–	10	7				7	–	–	
	1.5,13.5	–	15	11				11	–	–	
Input Current I_{IN} Max.	–	0,18	18	±0.1	±0.1	±1	±1	–	$\pm 10^{-5}$	±0.1	μA

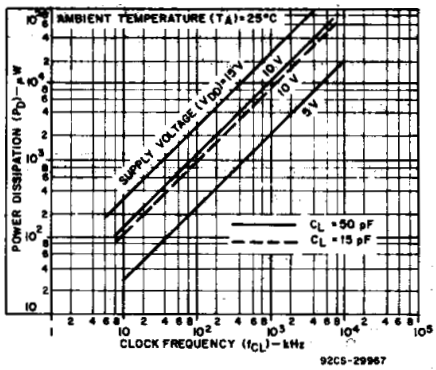

Fig. 9— Typical power dissipation as a function of CLOCK frequency.

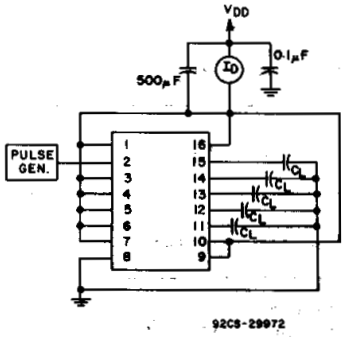

Fig. 10— Dynamic power dissipation test circuit.

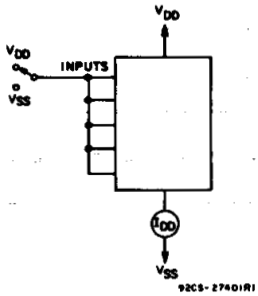

Fig. 11— Quiescent-device-current test circuit.

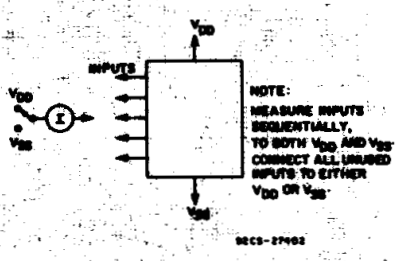

Fig. 12— Input-current test circuit.

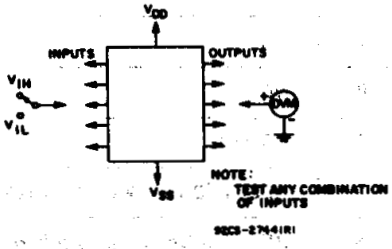

Fig. 13— Input-voltage test circuit.

TERMINAL ASSIGNMENT

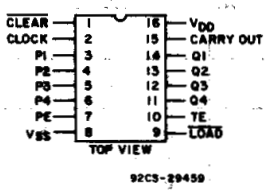

DYNAMIC ELECTRICAL CHARACTERISTICS at T_A = 25°C;
Input t_r, t_f = 20 ns, C_L = 50 pF, R_L = 200 kΩ

CHARACTERISTIC	TEST CONDITIONS V_{DD} (V)	LIMITS ALL TYPES* Min.	Typ.	Max.	UNITS
CLOCK OPERATION					
Propagation Delay Time, t_{PHL}, t_{PLH} Clock to Q	5	–	200	400	ns
	10	–	80	160	
	15	–	60	120	
Clock to C_{OUT}	5	–	225	450	ns
	10	–	95	190	
	15	–	70	140	
TE to C_{OUT}	5	–	125	250	ns
	10	–	55	110	
	15	–	40	80	
Minimum Setup Time, t_{SU} Data to Clock	5	–	120	240	ns
	10	–	45	90	
	15	–	30	60	
$\overline{\text{Load}}$ to Clock	5	–	120	240	ns
	10	–	45	90	
	15	–	30	60	
PE to TE to Clock	5	–	170	340	ns
	10	–	70	140	
	15	–	50	100	
Minimum Hold Time, t_H	5	–	–	0	ns
	10	–	–	0	
	15	–	–	0	
Transition Time, t_{THL}, t_{TLH}	5	–	100	200	ns
	10	–	50	100	
	15	–	40	80	
Minimum Clock Pulse Width, t_W	5	–	85	170	ns
	10	–	35	70	
	15	–	25	50	
Maximum Clock Frequency, f_{CL}	5	2	3	–	MHz
	10	5.5	8.5	–	
	15	8	12	–	
Maximum Clock Rise or Fall Time,† t_rCL, t_{fCL}	5	200	–	–	μs
	10	70	–	–	
	15	15	–	–	
CLEAR OPERATION					
Propagation Delay Time, t_{PHL} (CD40160B, CD40161B) $\overline{\text{Clear}}$ to Q	5	–	250	500	ns
	10	–	110	220	
	15	–	80	160	
Minimum Setup Time, t_{SU} (CD40162B, CD40163B) $\overline{\text{Clear}}$ to Clock	5	–	170	340	ns
	10	–	70	140	
	15	–	50	100	
Minimum Hold Time, t_H (CD40162B, CD40163B) $\overline{\text{Clear}}$ to Clock	5	–	–	0	ns
	10	–	–	0	
	15	–	–	0	
Minimum $\overline{\text{Clear}}$ Removal Time, t_{rem} (CD40160B, CD40161B)	5	–	100	200	ns
	10	–	50	100	
	15	–	35	70	
Minimum $\overline{\text{Clear}}$ Pulse Width, t_{WL} (CD40160B, CD40161B)	5	–	85	170	ns
	10	–	35	70	
	15	–	25	50	

* Except as noted.
† If more than one unit is cascaded in the parallel clocked application, t_rCL should be made less than or equal to the sum of the fixed propagation delay at 50 pF and the transition time of the carry output driving stage for the estimated capacitive load.

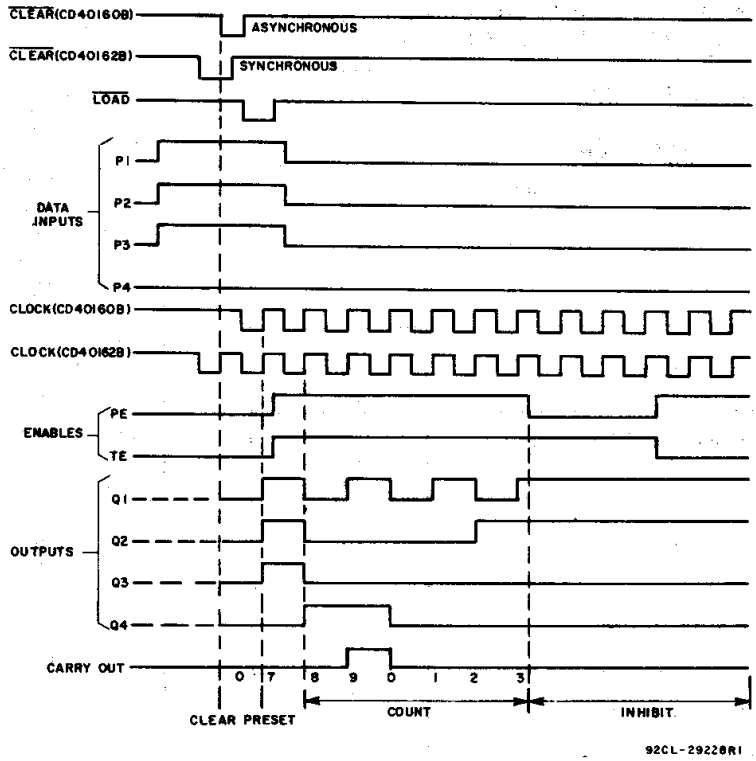

Fig. 14— Timing diagram for CD40160B, CD40162B.

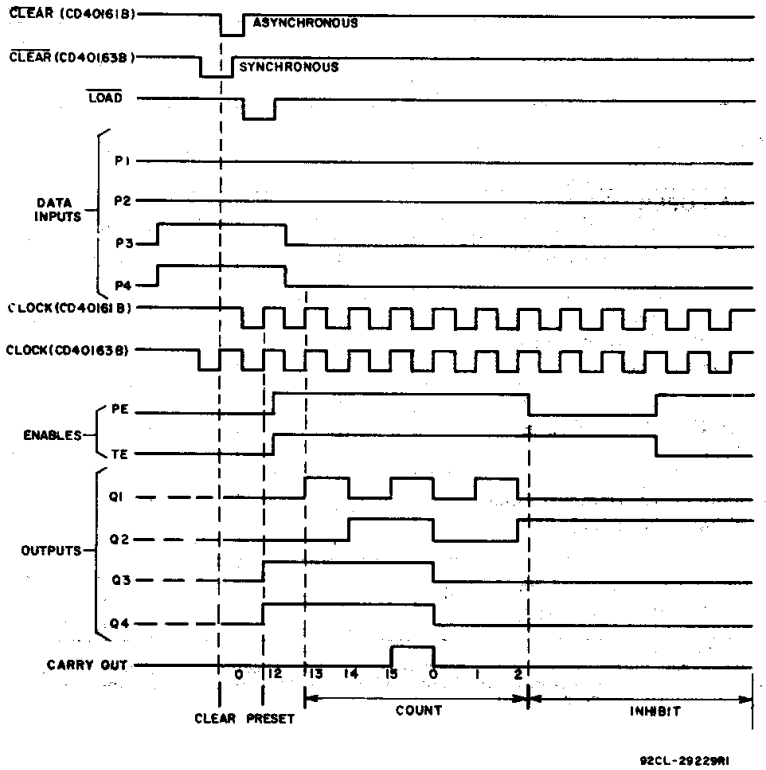

Fig. 15— Timing diagram for CD40161B, CD40163B.

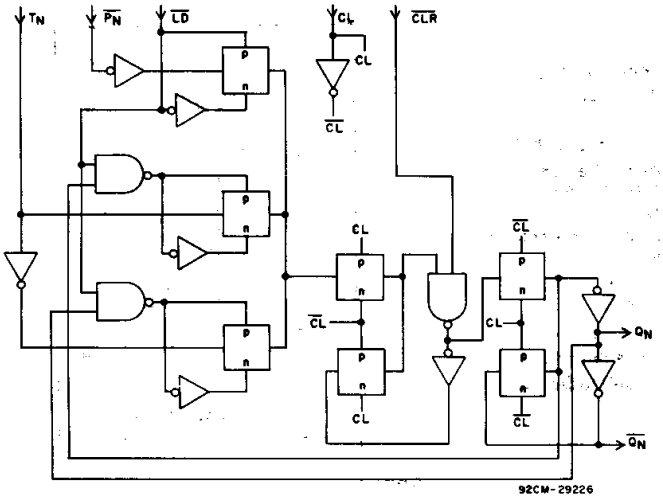

Fig. 16— Detail of flip-flops of CD40160B and CD40161B (asynchronous clear).

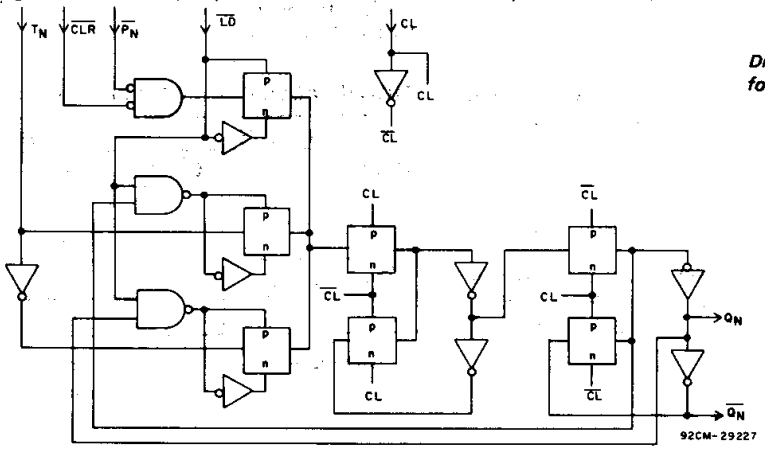

Fig. 17— Detail of flip-flops for CD40162B and CD40163B (synchronous clear).

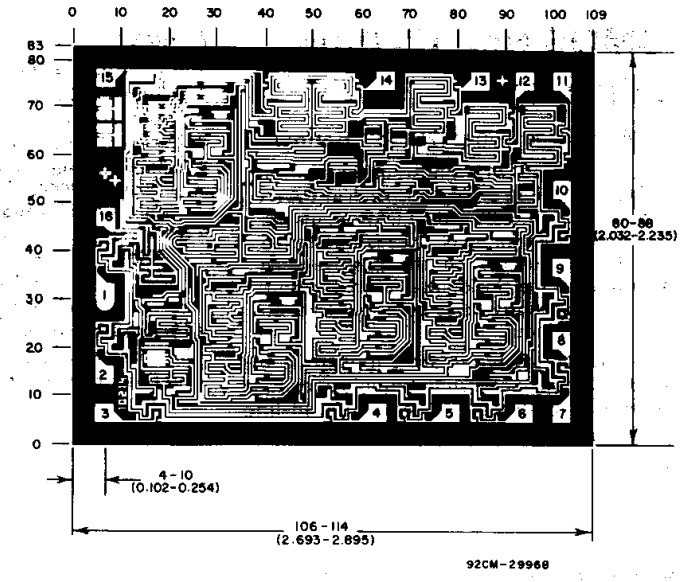

Dimensions and pad layout for CD40160BH. Dimensions and pad layout for CD40161BH, CD40162BH, and CD40163BH are identical.

Dimensions in parentheses are in millimeters and are derived from the basic inch dimensions as indicated. Grid graduations are in mils (10^{-3} inch).

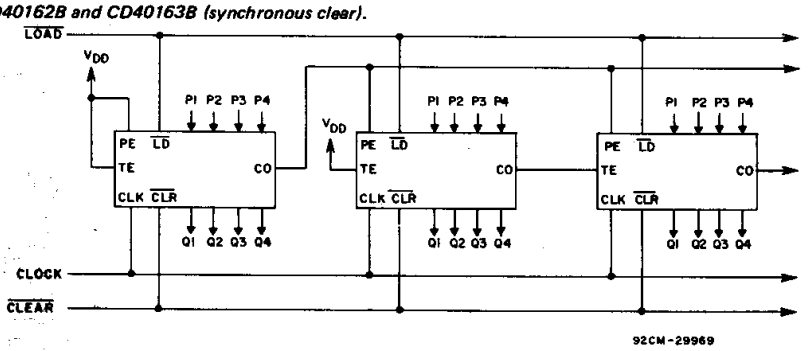

Fig. 18 – Cascaded counter packages in the parallel-clocked mode.

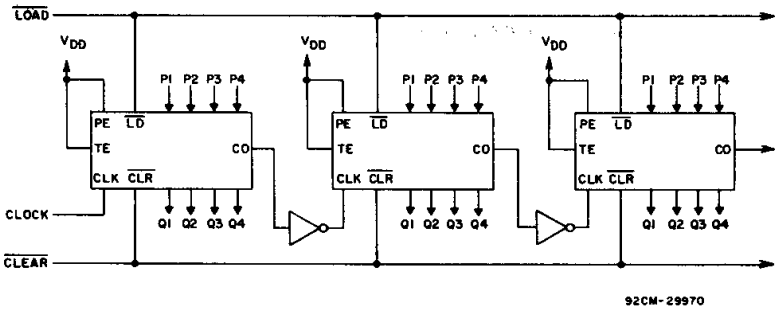

Fig. 19 – Cascaded counter packages in the ripple-clocked mode.

PACKAGING INFORMATION

Orderable part number	Status (1)	Material type (2)	Package | Pins	Package qty | Carrier	RoHS (3)	Lead finish/ Ball material (4)	MSL rating/ Peak reflow (5)	Op temp (°C)	Part marking (6)
CD40160BF3A	Active	Production	CDIP (J) | 16	25 | TUBE	No	SNPB	N/A for Pkg Type	-55 to 125	CD40160BF3A
CD40160BF3A.A	Active	Production	CDIP (J) | 16	25 | TUBE	No	SNPB	N/A for Pkg Type	-55 to 125	CD40160BF3A
CD40161BE	Active	Production	PDIP (N) | 16	25 | TUBE	Yes	NIPDAU	N/A for Pkg Type	-55 to 125	CD40161BE
CD40161BE.A	Active	Production	PDIP (N) | 16	25 | TUBE	Yes	NIPDAU	N/A for Pkg Type	-55 to 125	CD40161BE
CD40161BF3A	Active	Production	CDIP (J) | 16	25 | TUBE	No	SNPB	N/A for Pkg Type	-55 to 125	CD40161BF3A
CD40161BF3A.A	Active	Production	CDIP (J) | 16	25 | TUBE	No	SNPB	N/A for Pkg Type	-55 to 125	CD40161BF3A
CD40161BNSR	Active	Production	SOP (NS) | 16	2000 | LARGE T&R	Yes	NIPDAU	Level-1-260C-UNLIM	-55 to 125	CD40161B
CD40161BNSR.A	Active	Production	SOP (NS) | 16	2000 | LARGE T&R	Yes	NIPDAU	Level-1-260C-UNLIM	-55 to 125	CD40161B
CD40161BPWR	Active	Production	TSSOP (PW) | 16	2000 | LARGE T&R	Yes	NIPDAU	Level-1-260C-UNLIM	-55 to 125	CM0161B
CD40161BPWR.A	Active	Production	TSSOP (PW) | 16	2000 | LARGE T&R	Yes	NIPDAU	Level-1-260C-UNLIM	-55 to 125	CM0161B

(1) **Status:** For more details on status, see our product life cycle.

(2) **Material type:** When designated, preproduction parts are prototypes/experimental devices, and are not yet approved or released for full production. Testing and final process, including without limitation quality assurance, reliability performance testing, and/or process qualification, may not yet be complete, and this item is subject to further changes or possible discontinuation. If available for ordering, purchases will be subject to an additional waiver at checkout, and are intended for early internal evaluation purposes only. These items are sold without warranties of any kind.

(3) **RoHS values:** Yes, No, RoHS Exempt. See the TI RoHS Statement for additional information and value definition.

(4) **Lead finish/Ball material:** Parts may have multiple material finish options. Finish options are separated by a vertical ruled line. Lead finish/Ball material values may wrap to two lines if the finish value exceeds the maximum column width.

(5) **MSL rating/Peak reflow:** The moisture sensitivity level ratings and peak solder (reflow) temperatures. In the event that a part has multiple moisture sensitivity ratings, only the lowest level per JEDEC standards is shown. Refer to the shipping label for the actual reflow temperature that will be used to mount the part to the printed circuit board.

(6) **Part marking:** There may be an additional marking, which relates to the logo, the lot trace code information, or the environmental category of the part.

Multiple part markings will be inside parentheses. Only one part marking contained in parentheses and separated by a "~" will appear on a part. If a line is indented then it is a continuation of the previous line and the two combined represent the entire part marking for that device.

Important Information and Disclaimer: The information provided on this page represents TI's knowledge and belief as of the date that it is provided. TI bases its knowledge and belief on information provided by third parties, and makes no representation or warranty as to the accuracy of such information. Efforts are underway to better integrate information from third parties. TI has taken and continues to take reasonable steps to provide representative

and accurate information but may not have conducted destructive testing or chemical analysis on incoming materials and chemicals. TI and TI suppliers consider certain information to be proprietary, and thus CAS numbers and other limited information may not be available for release.

In no event shall TI's liability arising out of such information exceed the total purchase price of the TI part(s) at issue in this document sold by TI to Customer on an annual basis.

OTHER QUALIFIED VERSIONS OF CD40161B, CD40161B-MIL :

- Catalog : CD40161B
- Military : CD40161B-MIL

NOTE: Qualified Version Definitions:

- Catalog - TI's standard catalog product
- Military - QML certified for Military and Defense Applications

TAPE AND REEL INFORMATION

REEL DIMENSIONS

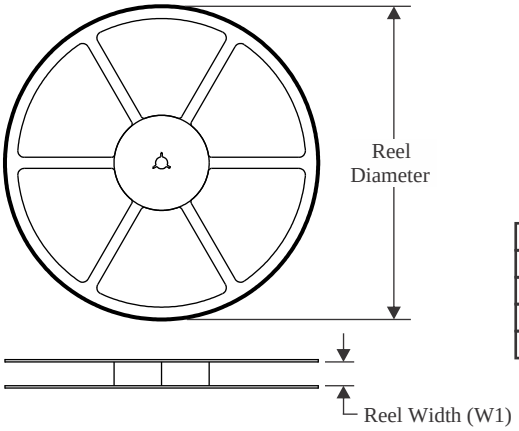

TAPE DIMENSIONS

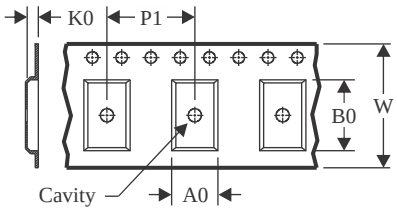

A0	Dimension designed to accommodate the component width
B0	Dimension designed to accommodate the component length
K0	Dimension designed to accommodate the component thickness
W	Overall width of the carrier tape
P1	Pitch between successive cavity centers

QUADRANT ASSIGNMENTS FOR PIN 1 ORIENTATION IN TAPE

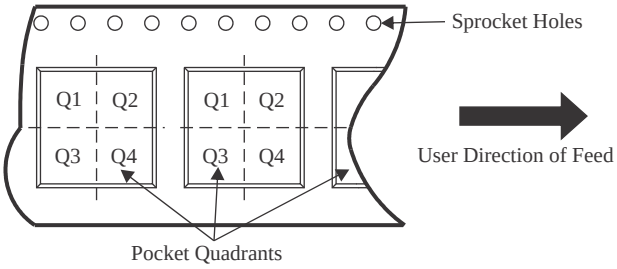

*All dimensions are nominal

Device	Package Type	Package Drawing	Pins	SPQ	Reel Diameter (mm)	Reel Width W1 (mm)	A0 (mm)	B0 (mm)	K0 (mm)	P1 (mm)	W (mm)	Pin1 Quadrant
CD40161BNSR	SOP	NS	16	2000	330.0	16.4	8.2	10.5	2.5	12.0	16.0	Q1
CD40161BPWR	TSSOP	PW	16	2000	330.0	12.4	6.9	5.6	1.6	8.0	12.0	Q1

TAPE AND REEL BOX DIMENSIONS

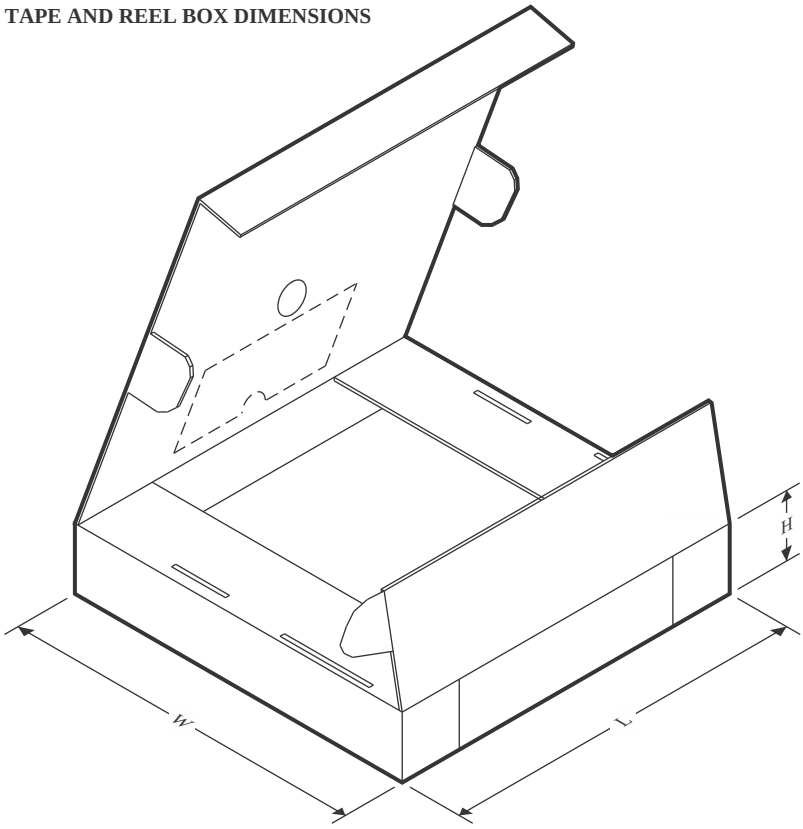

*All dimensions are nominal

Device	Package Type	Package Drawing	Pins	SPQ	Length (mm)	Width (mm)	Height (mm)
CD40161BNSR	SOP	NS	16	2000	356.0	356.0	35.0
CD40161BPWR	TSSOP	PW	16	2000	356.0	356.0	35.0

TUBE

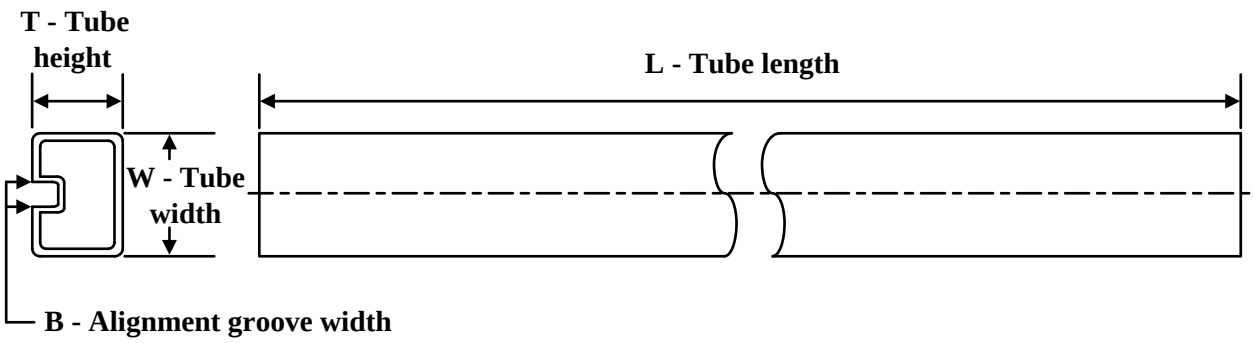

*All dimensions are nominal

Device	Package Name	Package Type	Pins	SPQ	L (mm)	W (mm)	T (µm)	B (mm)
CD40161BE	N	PDIP	16	25	506	13.97	11230	4.32
CD40161BE	N	PDIP	16	25	506	13.97	11230	4.32
CD40161BE.A	N	PDIP	16	25	506	13.97	11230	4.32
CD40161BE.A	N	PDIP	16	25	506	13.97	11230	4.32

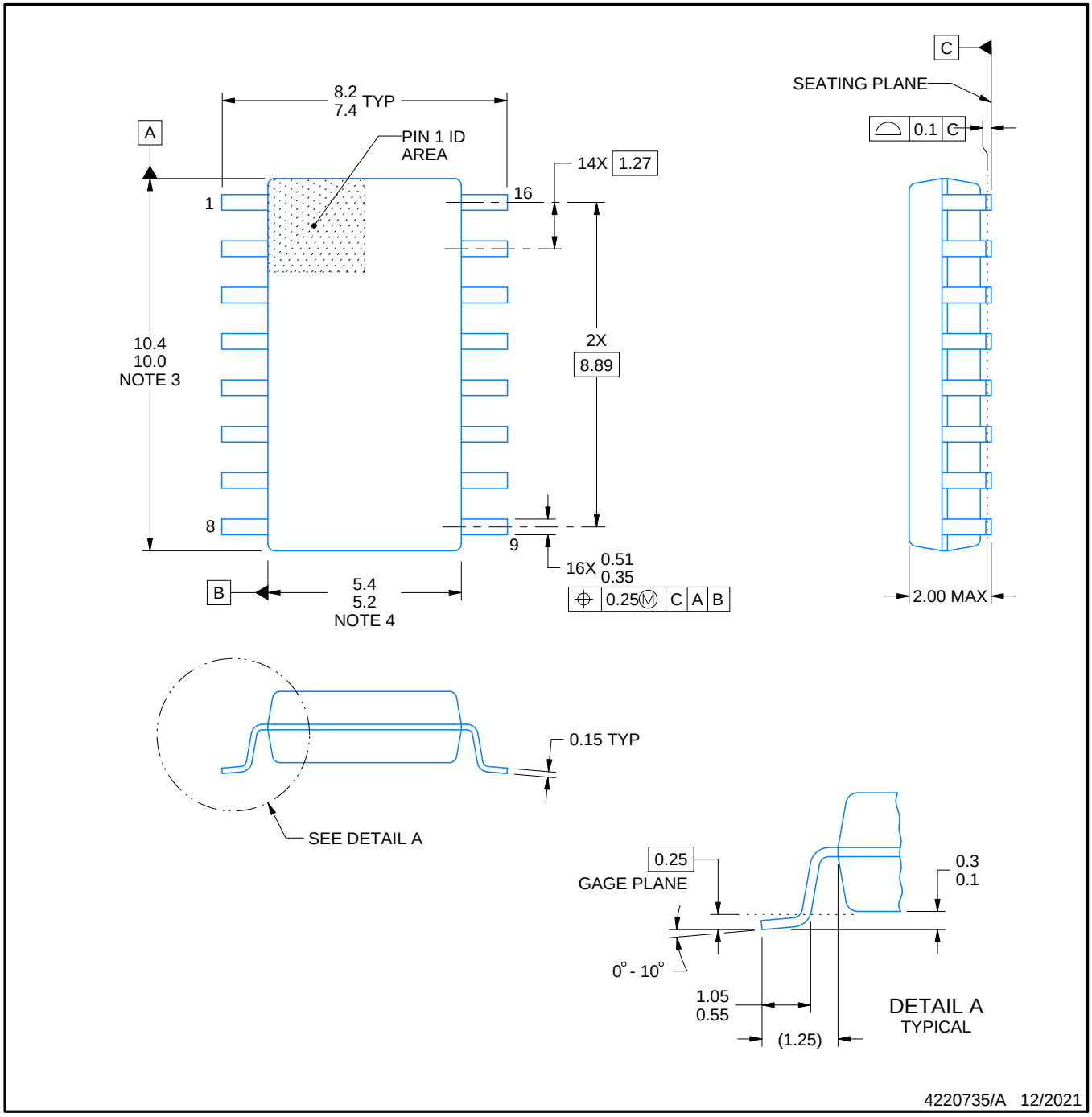

NOTES:

1. All linear dimensions are in millimeters. Dimensions in parenthesis are for reference only. Dimensioning and tolerancing per ASME Y14.5M.
2. This drawing is subject to change without notice.
3. This dimension does not include mold flash, protrusions, or gate burrs. Mold flash, protrusions, or gate burrs shall not exceed 0.15 mm, per side.
4. This dimension does not include interlead flash. Interlead flash shall not exceed 0.25 mm, per side.

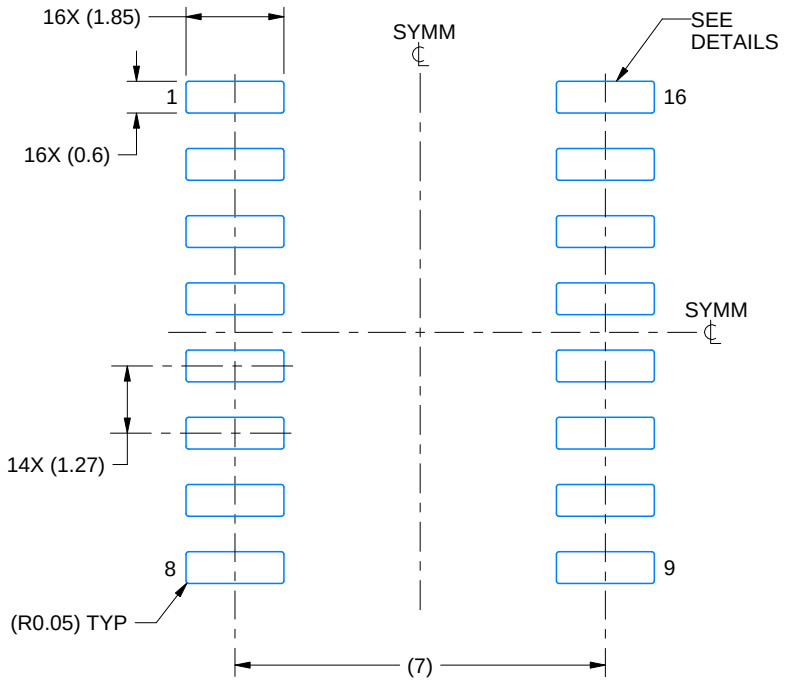

LAND PATTERN EXAMPLE
SCALE:7X

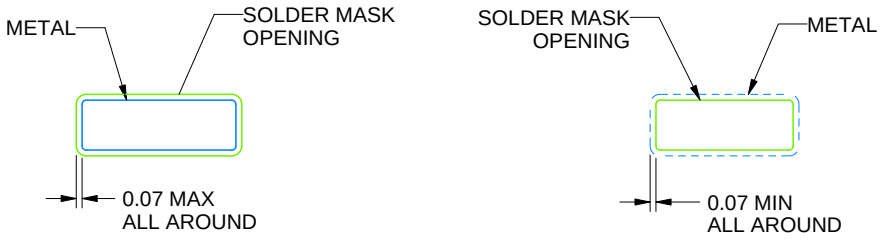

NON SOLDER MASK DEFINED

SOLDER MASK DEFINED

SOLDER MASK DETAILS

4220735/A 12/2021

NOTES: (continued)

5. Publication IPC-7351 may have alternate designs.
6. Solder mask tolerances between and around signal pads can vary based on board fabrication site.

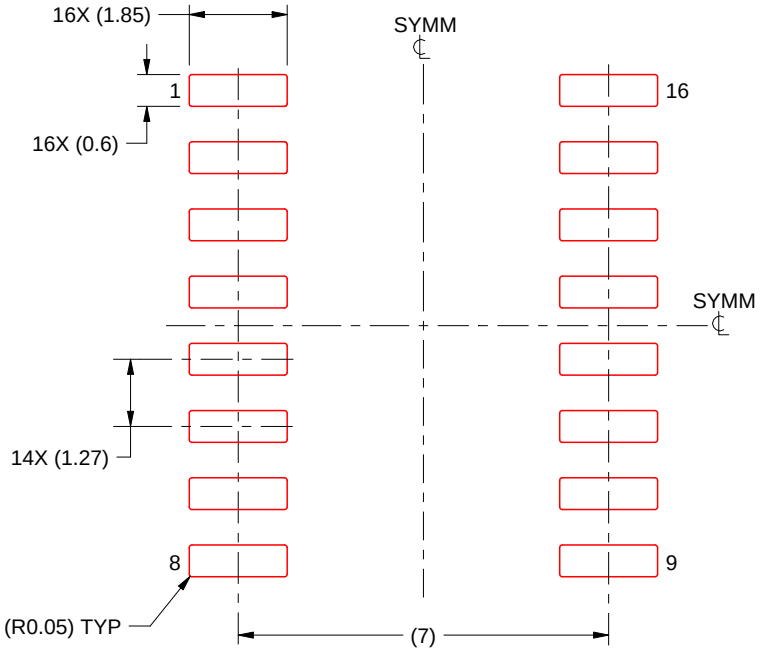

SOLDER PASTE EXAMPLE
BASED ON 0.125 mm THICK STENCIL
SCALE:7X

4220735/A 12/2021

NOTES: (continued)

7. Laser cutting apertures with trapezoidal walls and rounded corners may offer better paste release. IPC-7525 may have alternate design recommendations.
8. Board assembly site may have different recommendations for stencil design.

PW0016A

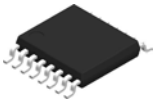

PACKAGE OUTLINE

TSSOP - 1.2 mm max height

SMALL OUTLINE PACKAGE

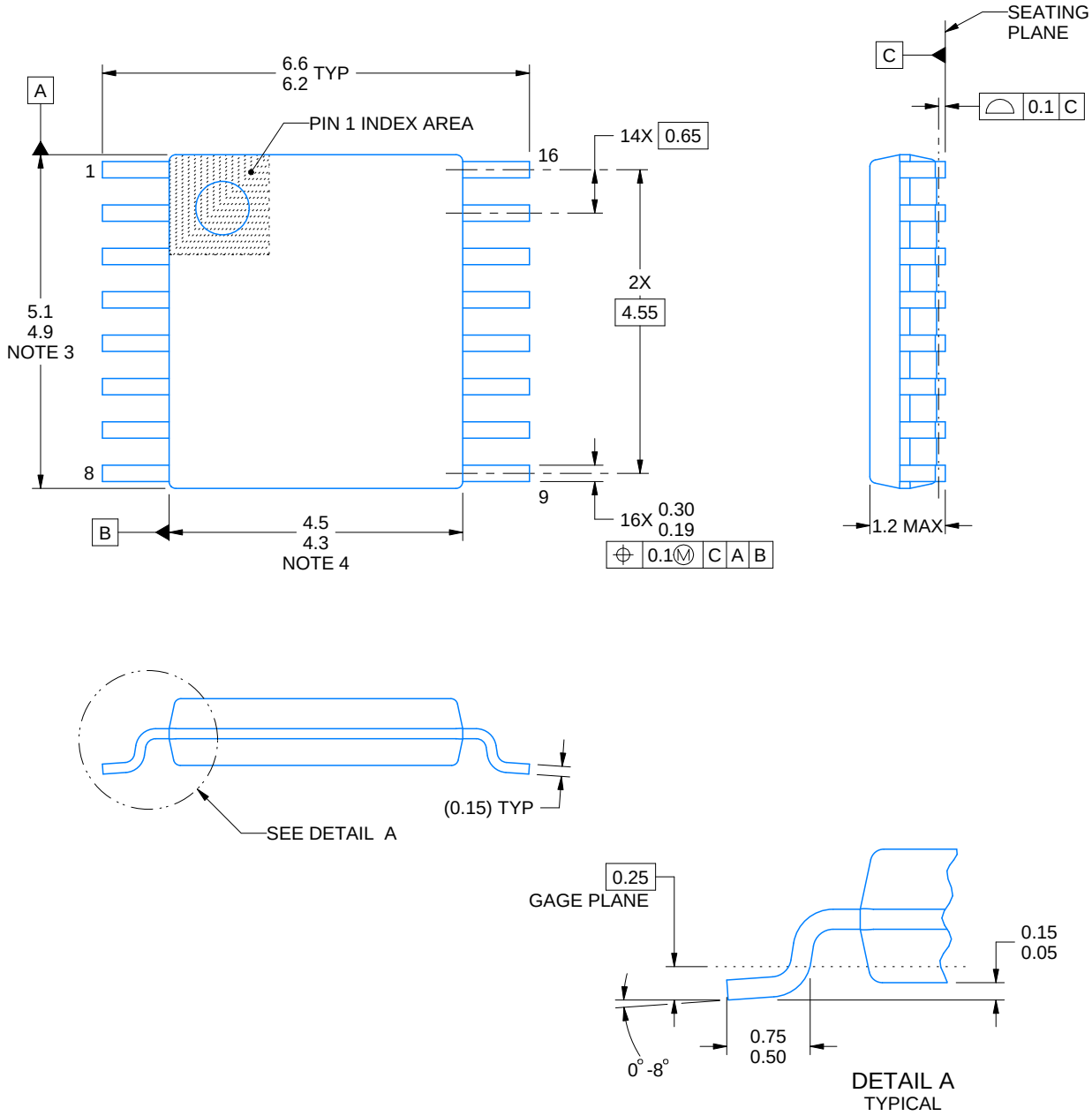

NOTES:

1. All linear dimensions are in millimeters. Any dimensions in parenthesis are for reference only. Dimensioning and tolerancing per ASME Y14.5M.
2. This drawing is subject to change without notice.
3. This dimension does not include mold flash, protrusions, or gate burrs. Mold flash, protrusions, or gate burrs shall not exceed 0.15 mm per side.
4. This dimension does not include interlead flash. Interlead flash shall not exceed 0.25 mm per side.
5. Reference JEDEC registration MO-153.

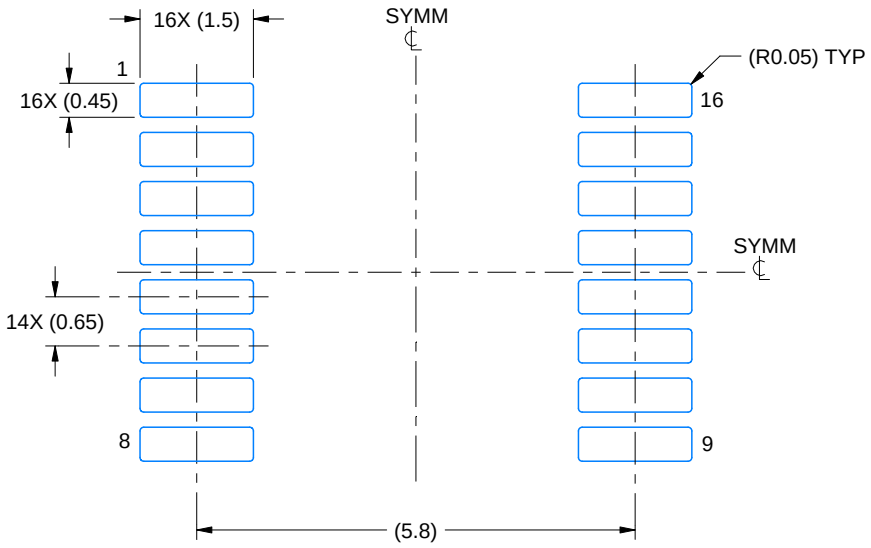

LAND PATTERN EXAMPLE
EXPOSED METAL SHOWN
SCALE: 10X

NON-SOLDER MASK DEFINED (PREFERRED)

SOLDER MASK DEFINED

SOLDER MASK DETAILS

4220204/A 02/2017

NOTES: (continued)

6. Publication IPC-7351 may have alternate designs.
7. Solder mask tolerances between and around signal pads can vary based on board fabrication site.

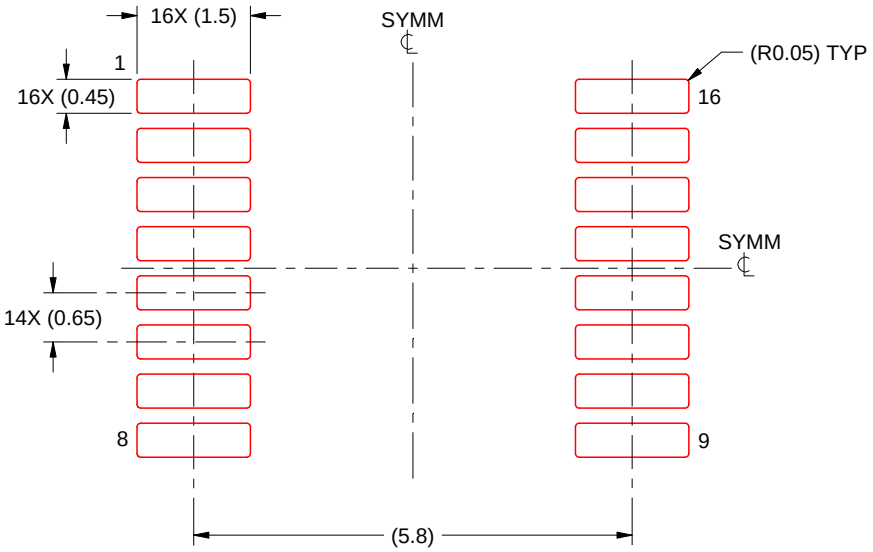

SOLDER PASTE EXAMPLE
BASED ON 0.125 mm THICK STENCIL
SCALE: 10X

4220204/A 02/2017

NOTES: (continued)

8. Laser cutting apertures with trapezoidal walls and rounded corners may offer better paste release. IPC-7525 may have alternate design recommendations.
9. Board assembly site may have different recommendations for stencil design.

MECHANICAL DATA

NS (R-PDSO-G)** **PLASTIC SMALL-OUTLINE PACKAGE**

14-PINS SHOWN

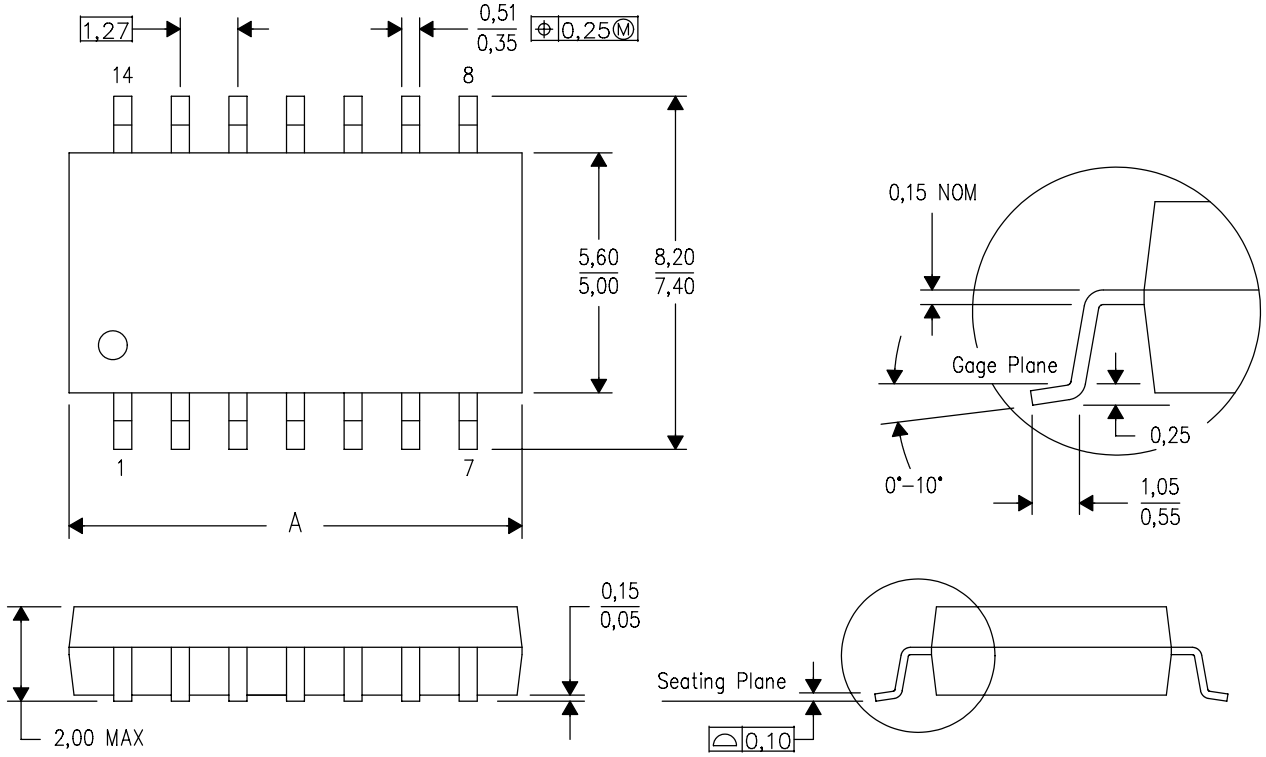

DIM \ PINS **	14	16	20	24
A MAX	10,50	10,50	12,90	15,30
A MIN	9,90	9,90	12,30	14,70

4040062/C 03/03

NOTES:
A. All linear dimensions are in millimeters.
B. This drawing is subject to change without notice.
C. Body dimensions do not include mold flash or protrusion, not to exceed 0,15.

J (R–GDIP–T**) CERAMIC DUAL IN–LINE PACKAGE

14 LEADS SHOWN

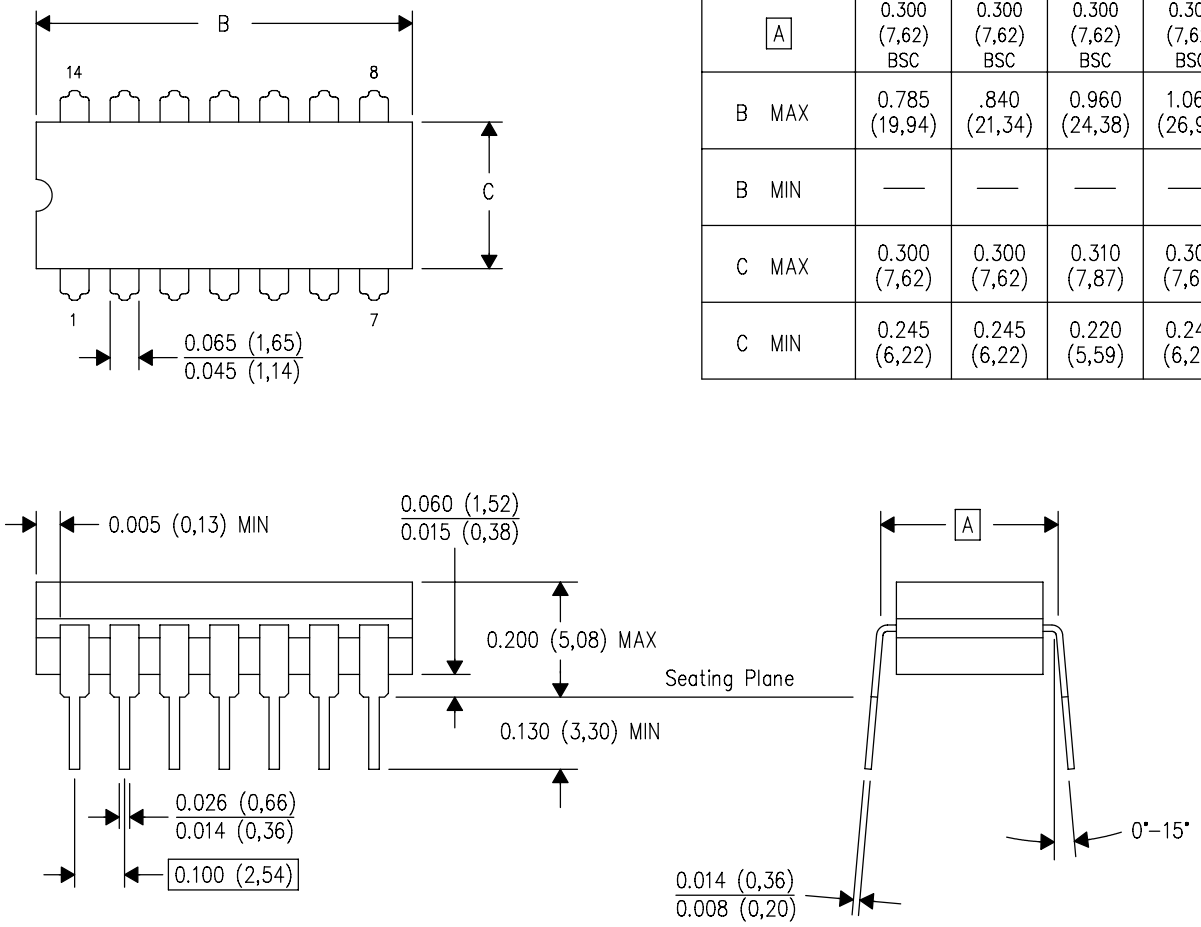

DIM \ PINS **	14	16	18	20
A	0.300 (7,62) BSC	0.300 (7,62) BSC	0.300 (7,62) BSC	0.300 (7,62) BSC
B MAX	0.785 (19,94)	.840 (21,34)	0.960 (24,38)	1.060 (26,92)
B MIN	—	—	—	—
C MAX	0.300 (7,62)	0.300 (7,62)	0.310 (7,87)	0.300 (7,62)
C MIN	0.245 (6,22)	0.245 (6,22)	0.220 (5,59)	0.245 (6,22)

4040083/F 03/03

NOTES:
- A. All linear dimensions are in inches (millimeters).
- B. This drawing is subject to change without notice.
- C. This package is hermetically sealed with a ceramic lid using glass frit.
- D. Index point is provided on cap for terminal identification only on press ceramic glass frit seal only.
- E. Falls within MIL STD 1835 GDIP1–T14, GDIP1–T16, GDIP1–T18 and GDIP1–T20.

N (R–PDIP–T**) PLASTIC DUAL–IN–LINE PACKAGE

16 PINS SHOWN

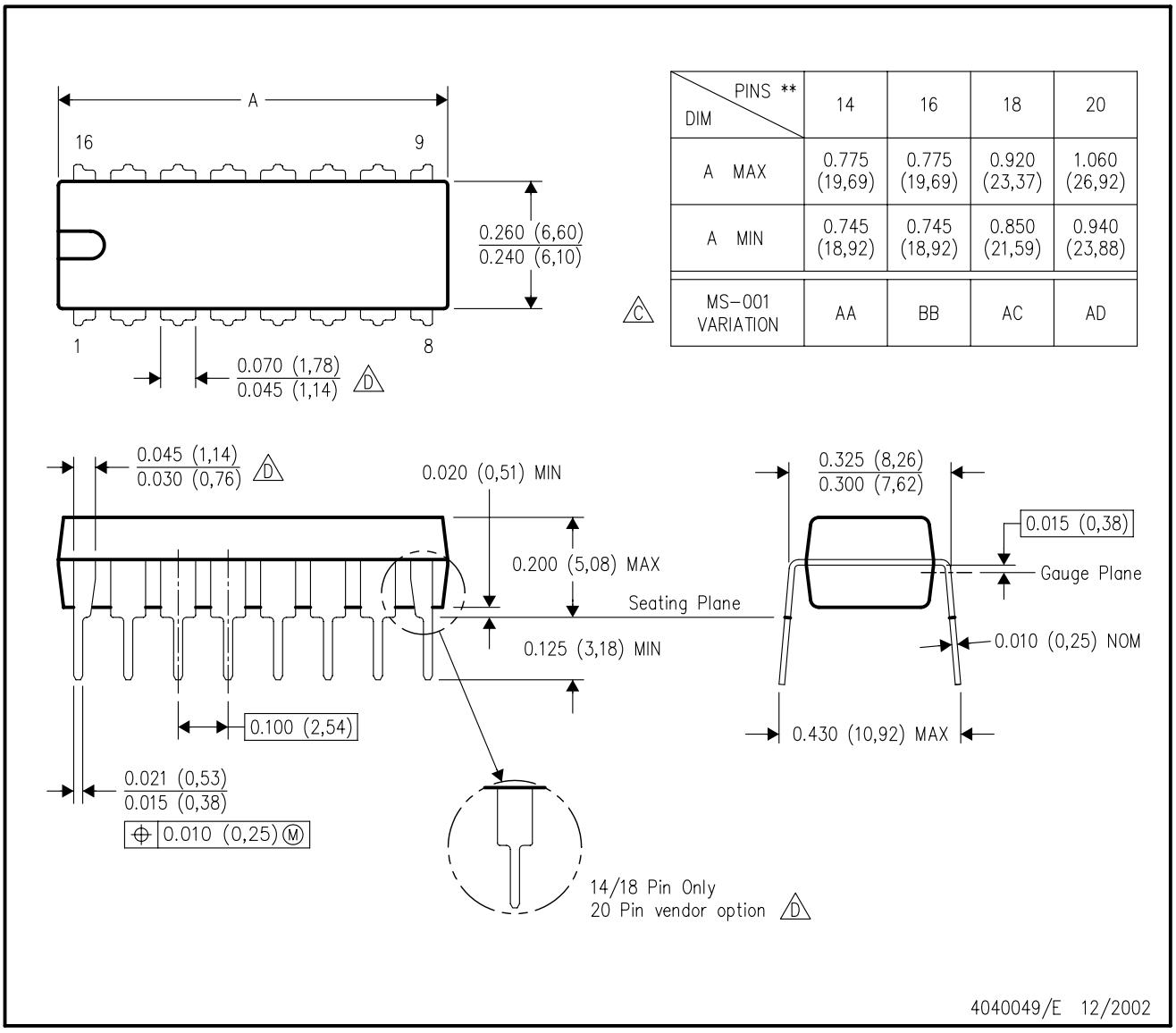

DIM \ PINS **	14	16	18	20
A MAX	0.775 (19,69)	0.775 (19,69)	0.920 (23,37)	1.060 (26,92)
A MIN	0.745 (18,92)	0.745 (18,92)	0.850 (21,59)	0.940 (23,88)
MS–001 VARIATION (C)	AA	BB	AC	AD

NOTES:
A. All linear dimensions are in inches (millimeters).
B. This drawing is subject to change without notice.
C. Falls within JEDEC MS–001, except 18 and 20 pin minimum body length (Dim A).
D. The 20 pin end lead shoulder width is a vendor option, either half or full width.

IMPORTANT NOTICE AND DISCLAIMER

TI PROVIDES TECHNICAL AND RELIABILITY DATA (INCLUDING DATA SHEETS), DESIGN RESOURCES (INCLUDING REFERENCE DESIGNS), APPLICATION OR OTHER DESIGN ADVICE, WEB TOOLS, SAFETY INFORMATION, AND OTHER RESOURCES “AS IS” AND WITH ALL FAULTS, AND DISCLAIMS ALL WARRANTIES, EXPRESS AND IMPLIED, INCLUDING WITHOUT LIMITATION ANY IMPLIED WARRANTIES OF MERCHANTABILITY, FITNESS FOR A PARTICULAR PURPOSE OR NON-INFRINGEMENT OF THIRD PARTY INTELLECTUAL PROPERTY RIGHTS.

These resources are intended for skilled developers designing with TI products. You are solely responsible for (1) selecting the appropriate TI products for your application, (2) designing, validating and testing your application, and (3) ensuring your application meets applicable standards, and any other safety, security, regulatory or other requirements.

These resources are subject to change without notice. TI grants you permission to use these resources only for development of an application that uses the TI products described in the resource. Other reproduction and display of these resources is prohibited. No license is granted to any other TI intellectual property right or to any third party intellectual property right. TI disclaims responsibility for, and you will fully indemnify TI and its representatives against, any claims, damages, costs, losses, and liabilities arising out of your use of these resources.

TI’s products are provided subject to TI’s Terms of Sale or other applicable terms available either on ti.com or provided in conjunction with such TI products. TI’s provision of these resources does not expand or otherwise alter TI’s applicable warranties or warranty disclaimers for TI products.

TI objects to and rejects any additional or different terms you may have proposed.

Mailing Address: Texas Instruments, Post Office Box 655303, Dallas, Texas 75265
Copyright © 2025, Texas Instruments Incorporated