TPS92411x Floating Switch for Offline AC Linear Direct Drive of LEDs with Low Ripple Current

1 Features

- High-Performance Solution for Driving LEDs from AC Mains
- Simplifies Design of Phase Dimmable LED Driver with High Power Factor, Low Total Harmonic Distortion, and Low Current Ripple
- Suitable for LED Luminaires up to 70+ W
- Input Voltage Range: 7.5 V to 100 V
- Stackable 100 V, 2-Ω MOSFET Building Block
- Controlled Switch Open and Close Transitions Minimize EMI
- Designed for use with the TPS92410 or with a Discrete Linear Regulator
- Input Undervoltage Protection
- Output Overvoltage Protection (TPS92411P)
- Low I_Q: 200 µA (typ)

2 Applications

- LED Lamps and Light Bulbs
- LED Luminaires
- Downlights

3 Description

The TPS92411 is a 100-V floating MOSFET switch for use in offline LED lighting applications. The device is used in conjunction with a current regulator that can achieve a power factor greater than 0.9 to create a LED drive solution with low-ripple current. When properly designed, solution performance is comparable to traditional flyback, buck or boost-based AC/DC LED drivers. The approach requires no inductive components, thus saving size and cost. Slew-controlled low-frequency operation of the TPS92411 switches creates very little EMI. Detailed operation is described in the *Application Information* section.

Package options include SOT23-5 and PSOP-8 allowing the user to optimize for small size or scale for high power. Using the PSOP-8 package, design of LED luminaires up to 70 W or more is possible. Other features include a UVLO circuit to monitor when the device has sufficient voltage to operate properly and over-voltage protection (TPS92411P).

Device Information(1)

PART NUMBER	PACKAGE	BODY SIZE (NOM)
TPS92411, TPS92411P	SOT-23 (5)	2.90 mm x 1.60 mm
	SO PowerPAD (8)	4.89 mm x 3.90 mm

(1) For all available packages, see the orderable addendum at the end of the datasheet.

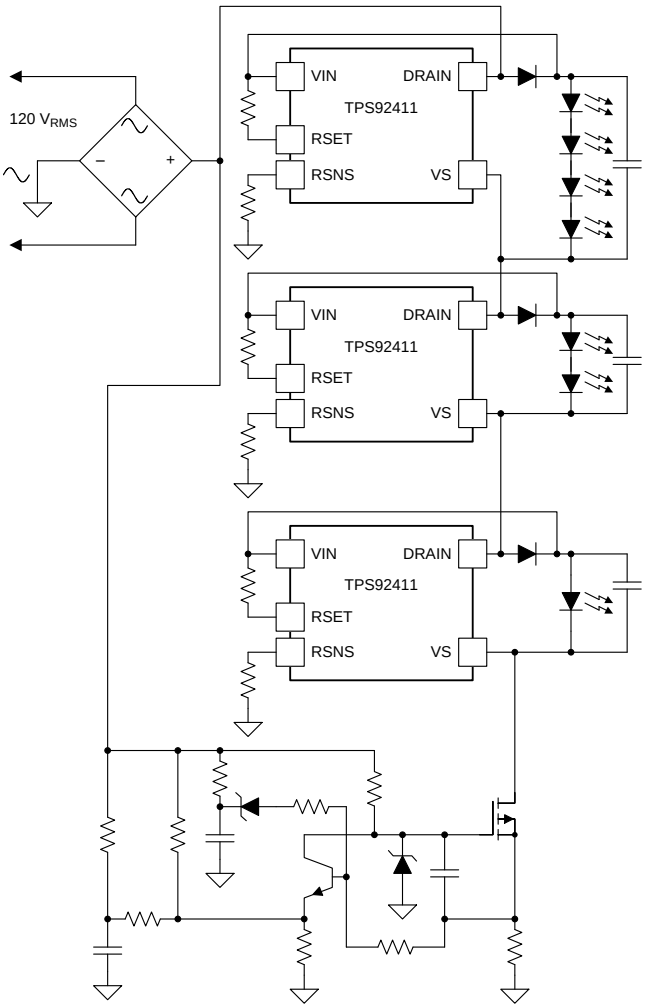

An IMPORTANT NOTICE at the end of this data sheet addresses availability, warranty, changes, use in safety-critical applications, intellectual property matters and other important disclaimers. PRODUCTION DATA.

Table of Contents

1 Features ... 1
2 Applications ... 1
3 Description ... 1
4 Revision History ... 2
5 Pin Configuration and Functions ... 3
6 Specifications ... 3
6.1 Absolute Maximum Ratings ... 3
6.2 Handling Ratings ... 3
6.3 Recommended Operating Conditions ... 4
6.4 Thermal Information ... 4
6.5 Electrical Characteristics ... 4
6.6 Typical Characteristics ... 6
7 Detailed Description ... 8
7.1 Overview ... 8
7.2 Functional Block Diagram ... 8
7.3 Feature Description ... 9
7.4 Device Functional Modes ... 10
8 Application and Implementation ... 11
8.1 Application Information ... 11
8.2 Typical Application ... 12
9 Power Supply Recommendations ... 18
10 Layout ... 18
10.1 Layout Guidelines ... 18
10.2 Layout Example ... 18
11 Device and Documentation Support ... 19
11.1 Related Links ... 19
11.2 Trademarks ... 19
11.3 Electrostatic Discharge Caution ... 19
11.4 Glossary ... 19
12 Mechanical, Packaging, and Orderable Information ... 19

4 Revision History

Changes from Revision A (May 2014) to Revision B	Page
• Added *Pin Configuration and Functions* section, *Handling Rating* table, *Feature Description* section, *Device Functional Modes*, *Application and Implementation* section, *Power Supply Recommendations* section, *Layout* section, *Device and Documentation Support* section, and *Mechanical, Packaging, and Orderable Information* section	1

Changes from Original (October 2013) to Revision A	Page
• Deleted preview designation for DDA package	3
• Added availablity information for DDA package	3

Copyright © 2013–2014, Texas Instruments Incorporated

5 Pin Configuration and Functions

DBV (SOT23-5) PACKAGE
5 PIN
(TOP VIEW)

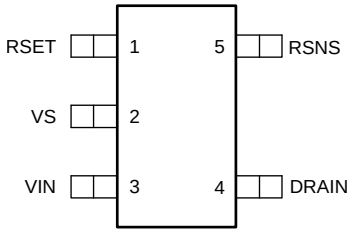

DDA (SO-8 Power-Pad) PACKAGE
8 PIN
(TOP VIEW)

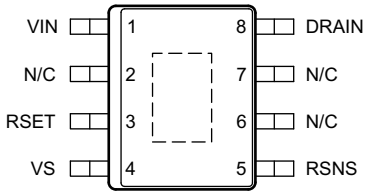

Pin Functions

PIN			I/O	DESCRIPTION
NAME	NO.			
	DDA	DBV		
DRAIN	8	4	O	Drain of the internal switch.
N/C	2	—	—	Not internally connected.
N/C	6			
N/C	7			
VIN	1	3	I	Positive power supply for the device.
VS	4	2	I/O	Source of the internal switch. This pin is also the device floating ground.
RSET	3	1	I/O	A resistor connected between the RSET pin and the VIN pin sets the rising threshold to open the switch.
RSNS	5	5	I/O	A resistor connected between the RSNS pin to system ground senses the VS voltage relative to system ground.
Exposed Themal Pad				Connect to VS pin directly beneath the device.

6 Specifications

6.1 Absolute Maximum Ratings

All voltages are with respect to VS, –40 °C < $T_J = T_A$ ≤ 150 °C. All currents are positive into and negative out of the specified terminal (unless otherwise noted).

		MIN	MAX	UNIT
Supply voltage	VIN	–0.3	105	V
Switch voltage	DRAIN	–0.3	105	
Junction temperature	T_J	–40	165	ºC

6.2 Handling Ratings

			MIN	MAX	UNIT
T_{stg}	Storage temperature range		–65	150	°C
$V_{(ESD)}$	Electrostatic discharge	Human body model (HBM), per ANSI/ESDA/JEDEC JS-001, all pins(1)		1	kV
		Charged device model (CDM), per JEDEC specification JESD22-C101, all pins(2)		250	V

(1) JEDEC document JEP155 states that 500-V HBM allows safe manufacturing with a standard ESD control process.
(2) JEDEC document JEP157 states that 250-V CDM allows safe manufacturing with a standard ESD control process.

Copyright © 2013–2014, Texas Instruments Incorporated

6.3 Recommended Operating Conditions

Over operating free-air temperature range (unless otherwise noted)

			MIN	TYP	MAX	UNIT
VIN	Input voltage	TPS92411P	7.5		94	V
		TPS92411	7.5		100	
T_J	Operating junction temperature		–40	25	150	°C

6.4 Thermal Information

THERMAL METRIC[1]		TPS92411		UNIT
		DBV	DDA	
		5 PINS	8 PINS	
θ_{JA}	Junction-to-ambient thermal resistance[2]	209.8	58.6	°C/W
θ_{JCtop}	Junction-to-case (top) thermal resistance[3]	125.2	72	
θ_{JB}	Junction-to-board thermal resistance[4]	38	39.1	
ψ_{JT}	Junction-to-top characterization parameter[5]	15.6	21.6	
ψ_{JB}	Junction-to-board characterization parameter[6]	37.1	39.1	
θ_{JCbot}	Junction-to-case (bottom) thermal resistance[7]	N/A	15	

(1) For more information about traditional and new thermal metrics, see the IC Package Thermal Metrics application report, SPRA953.
(2) The junction-to-ambient thermal resistance under natural convection is obtained in a simulation on a JEDEC-standard, high-K board, as specified in JESD51-7, in an environment described in JESD51-2a.
(3) The junction-to-case (top) thermal resistance is obtained by simulating a cold plate test on the package top. No specified JEDEC-standard test exists, but a close description can be found in the ANSI SEMI standard G30-88.
(4) The junction-to-board thermal resistance is obtained by simulating in an environment with a ring cold plate fixture to control the PCB temperature, as described in JESD51-8.
(5) The junction-to-top characterization parameter, θ_{JT}, estimates the junction temperature of a device in a real system and is extracted from the simulation data for obtaining θ_{JA}, using a procedure described in JESD51-2a (sections 6 and 7).
(6) The junction-to-board characterization parameter, θ_{JB}, estimates the junction temperature of a device in a real system and is extracted from the simulation data for obtaining θ_{JA}, using a procedure described in JESD51-2a (sections 6 and 7).
(7) The junction-to-case (bottom) thermal resistance is obtained by simulating a cold plate test on the exposed (power) pad. No specific JEDEC standard test exists, but a close description can be found in the ANSI SEMI standard G30-88.

6.5 Electrical Characteristics

Unless otherwise specified –40 °C ≤ T_J = T_A ≤ 150 °C, (V_{VIN} – V_{VS}) = 30 V, R_{RSET} = R_{RSNS} = Open, all voltages are with respect to VS.

PARAMETER			TEST CONDITIONS	MIN	TYP	MAX	UNIT
INPUT SUPPLY (VIN)							
$V_{IN(ovp)}$	Input overvoltage protection	TPS92411P	Rising threshold	95	100		V
			Falling threshold		96		
			Hysteresis		4		
I_Q	Bias current				200	400	µA
$V_{IN(uvlo)}$	Input undervoltage lockout		Rising threshold		6.5	7	V
$V_{IN(hys)}$	Input UVLO hysteresis				370		mV
SWITCH CONTROL (RSNS, RSET)							
I_{RSNS}	RSNS threshold current			–3.3	–4	–4.9	µA
V_{RSNS_OS}	RSNS offset voltage			165	210	255	mV
V_{RSET}	RSET threshold voltage			1.2	1.25	1.3	V
I_{RSET}	RSET current		I_{RSNS} = –20 µA, (V_{RSET} – V_{VS}) = 1.5 V	–9.3	–10	–10.7	µA
			I_{RSNS} = –40 µA, (V_{RSET} – V_{VS}) = 1.5 V	–19	–20	–21	
			I_{RSNS} = –100 µA, (V_{RSET} – V_{VS}) = 1.5 V	–47.9	–50	–52.1	
SWITCH (DRAIN, VS)							
$R_{DS(on)}$	On-resistance		I_{DRAIN} = 100 mA, T_J = 25°C	1	2	2.5	Ω

Copyright © 2013–2014, Texas Instruments Incorporated

Electrical Characteristics (continued)

Unless otherwise specified –40 °C ≤ T_J = T_A ≤ 150 °C, (V_{VIN} – V_{VS}) = 30 V, R_{RSET} = R_{RSNS} = Open, all voltages are with respect to VS.

PARAMETER		TEST CONDITIONS	MIN	TYP	MAX	UNIT
$dv/dt_{(ON)}$	Switch ON slew rate	(V_{DRAIN} – V_{VS}) falling 36 V to 4 V, I_{SW} = 100 mA		1		V/µs
$dv/dt_{(OFF)}$	Switch OFF slew rate	(V_{DRAIN} – V_{VS}) = rising 4 V to 36 V, I_{SW} = 100 mA		0.5		

6.6 Typical Characteristics

Unless otherwise stated, –40 °C ≤ T_A = T_J ≤ 150 °C, (V_{VIN} – V_{VS}) = 30 V, all voltages are with respect to VS.

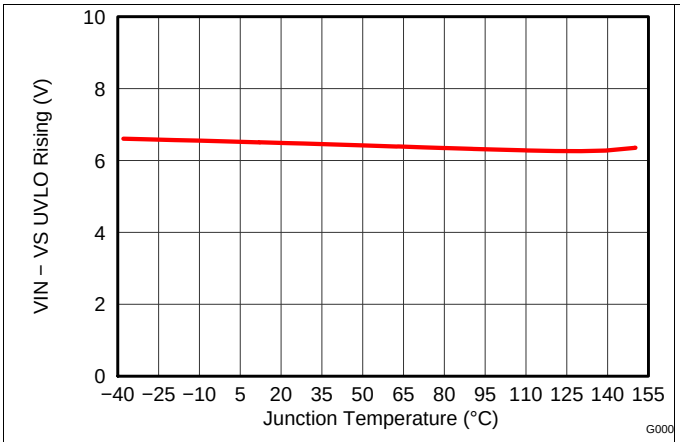

Figure 1. UVLO vs. Temperature

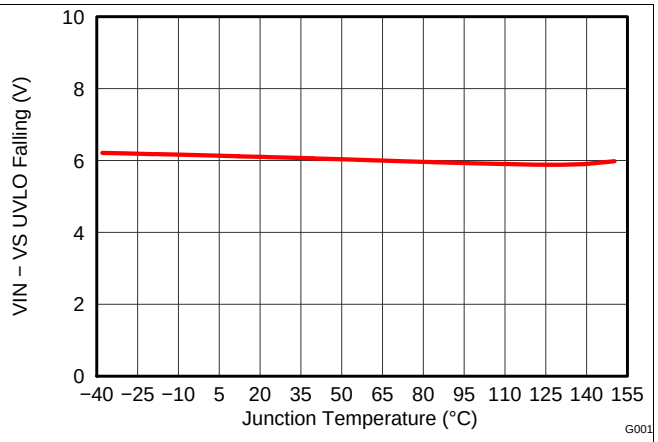

Figure 2. UVLO vs. Temperature

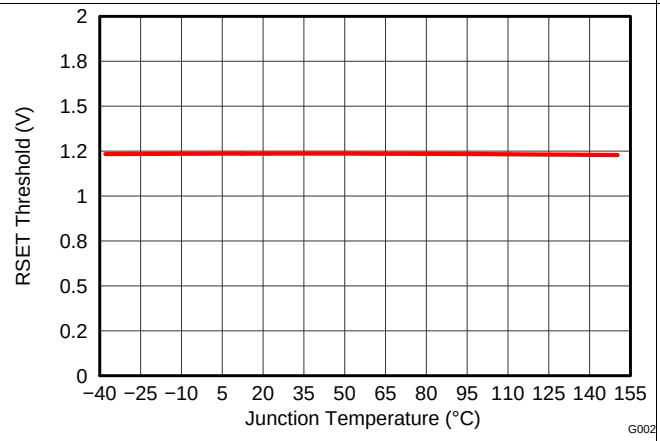

Figure 3. RSET Threshold vs. Temperature

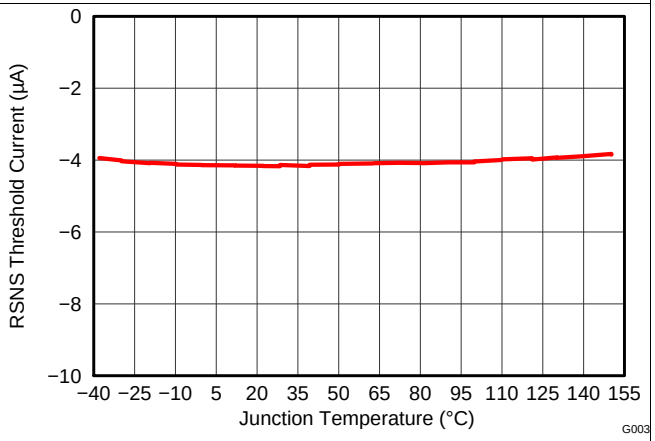

Figure 4. RSNS Threshold Current vs. Temperature

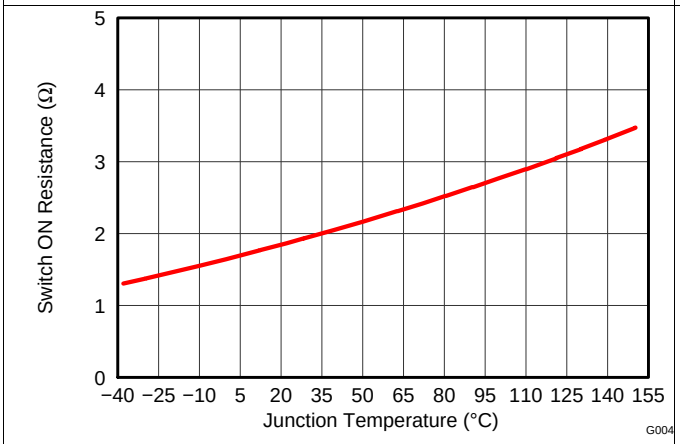

Figure 5. Switch On-Resistance ($R_{DS(on)}$) vs. Temperature

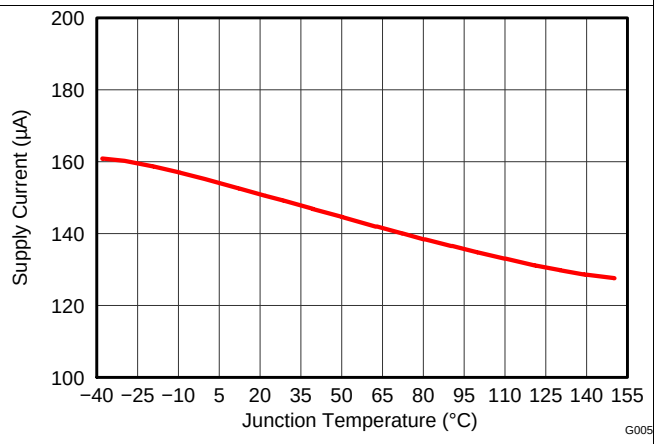

Figure 6. Input Voltage Quiescent Current vs. Temperature

Copyright © 2013–2014, Texas Instruments Incorporated

Typical Characteristics (continued)

Unless otherwise stated, –40 °C ≤ T_A = T_J ≤ 150 °C, (V_{VIN} – V_{VS}) = 30 V, all voltages are with respect to VS.

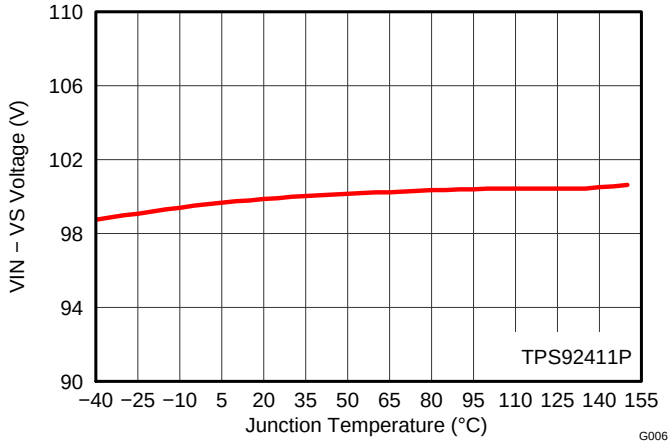

Figure 7. (V_{VIN} – V_{VS}) Overvoltage Threshold vs. Temperature

7 Detailed Description

7.1 Overview

The TPS92411 is an advanced, floating driver specifically designed for use with a linear regulator in low-power offline LED lighting applications. It integrates an on-board 100-V MOSFET switch to shunt LED current as the line transitions. As the line transitions through the cycle, the device monitors critical nodes for zero cross at which time the internal switch is either opened or shorted to steer the current through or away from the LED stack. The TPS92411 does not directly control output power or LED current, it just directs current to the LED stack or bypasses the LED stack.

7.2 Functional Block Diagram

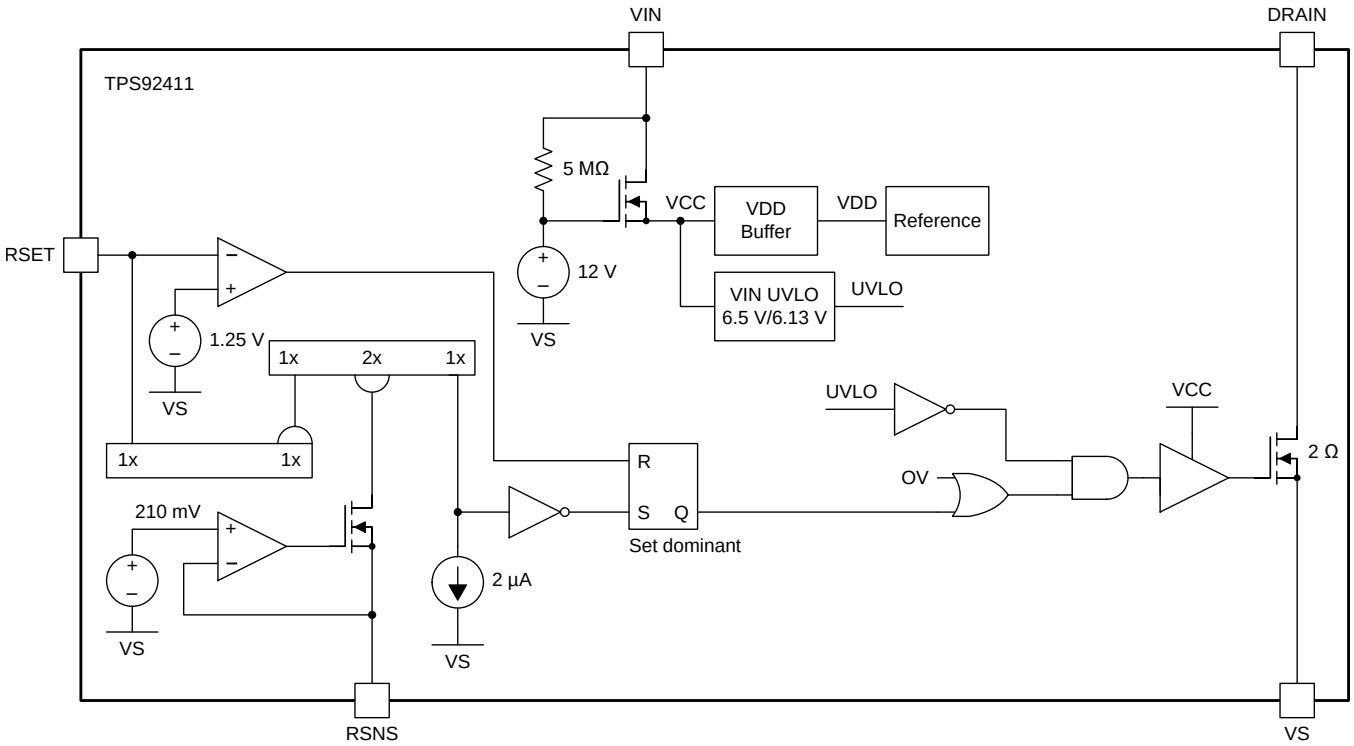

Figure 8. TPS92411 Block Diagram

Copyright © 2013–2014, Texas Instruments Incorporated

Functional Block Diagram (continued)

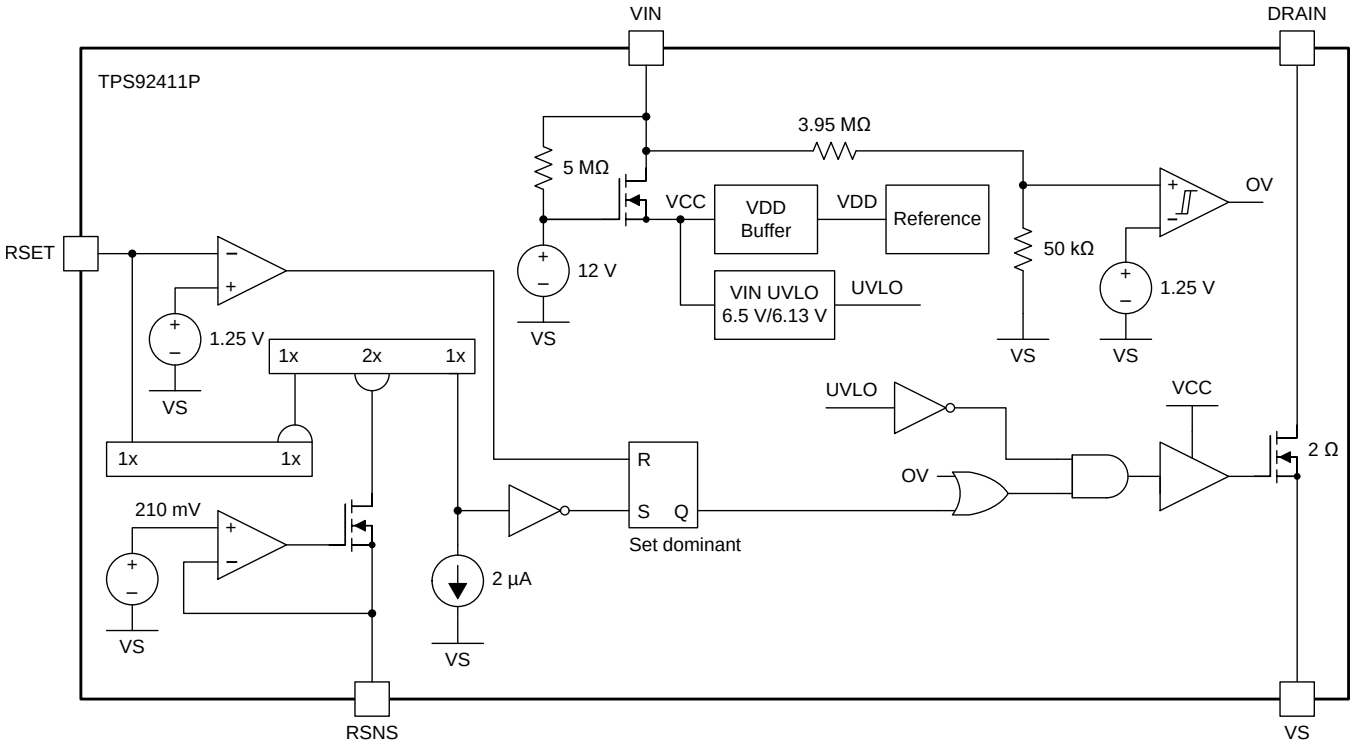

Figure 9. TPS92411P Block Diagram

7.3 Feature Description

7.3.1 Overvoltage Protection (OVP)

Overvoltage protection (OVP) in the TPS92411P version protects the device as well as the LEDs and storage capacitor. The OVP is set at approximately 100 V ($V_{VIN} – V_{VS}$) and closes the internal switch when the threshold voltage is reached. For this reason LED stack voltages of 94 V or less are recommended. Higher voltages can be used with the TPS92411 version but tolerances must be considered to ensure that the 105 V absolute maximum rating is not exceeded.

7.3.2 Input Undervoltage Lockout (UVLO)

The TPS92411 includes input UVLO. The UVLO prevents the device from operation until the VIN pin voltage with respect to VS exceeds 6.5 V and ensures the device behaves properly when enabled.

7.3.3 LED Capacitor

A capacitor is required across each LED stack to provide current to the LEDs during the switch ON time. Refer to the available calculator software (SLVC516 for 120-V applications or SLVC517 for 230-V applications) for calculating the minimum value required for any particular application. The software calculates the minimum value required for a particular application, but best performance is acheived by using as much capacitance as possible given size and cost constraints. These design tools also calculate a minimum value for any given current ripple percent or flicker index desired for the particular application.

7.3.4 Blocking Diode

A blocking diode is required between the drain of the switch (DRAIN) and the anode of the LED stack. This prevents the LED capacitor from discharging through the switch during the switch ON time instead allowing it to discharge through the LED stack. This diode should be rated for 200 V reverse voltage and capable of forward currents as high as the average linear regulator current setting.

Copyright © 2013–2014, Texas Instruments Incorporated

7.4 Device Functional Modes

The TPS92411P has 4 functional modes while the TPS92411 has 3:

7.4.1 Input UVLO

As described in the previous section the device and internal switch will remain off until VIN is 6.5V or greater with respect to VS.

7.4.2 Operating with Internal Switch ON

After the device crosses the UVLO threshold the internal switch will turn on and remain on until the voltage at the VIN pin exceeds the threshold voltage set by the RSET resistor.

7.4.3 Operating with Internal Switch OFF

When the RSET threshold voltage is exceeded on the VIN pin the internal switch will turn off forcing all the current to flow through the LEDs and charge the LED capacitor. The switch will remain off until the VS pin drops below the threshold voltage set by RSNS or an overvoltage event occurs (TPS92411P only).

7.4.4 Overvoltage Operation (TPS92411P)

If an LED fails open or a string voltage exceeding the OVP level is used the device will enter OVP operation. The internal switch will close and remain closed until the VIN voltage with respect to the VS pin drops low enough to engage normal operation again.

Copyright © 2013–2014, Texas Instruments Incorporated

8 Application and Implementation

8.1 Application Information

The TPS92411 is an advanced, floating driver specifically designed for use with a linear regulator in low-power offline LED lighting applications. It integrates an on-board 100-V MOSFET switch to shunt LED current as the line transitions. As the line transitions through the cycle, the device monitors critical nodes for zero cross at which time the internal switch is either opened or shorted to steer the current through or away from the LED stack. Use the following design procedure to select components for the TPS92411. The following calculators may also be used to select components for the TPS92411:

- SLVC579 for 120-V applications using the TPS92410
- SLVC580 for 230-V applications using the TPS92410
- SLVC516 for 120-V applications using a discrete linear regulator
- SLVC517 for 230-V applications using a discrete linear regulator

PSpice and TINA-TI models are also available. The following are typical applications using the TPS92411 for both 120-V and 230-V applications using a discrete linear regulator.

8.2 Typical Application

8.2.1 120-VAC, Phase Dimmable 11.5-W Input with Discrete Linear Regulator

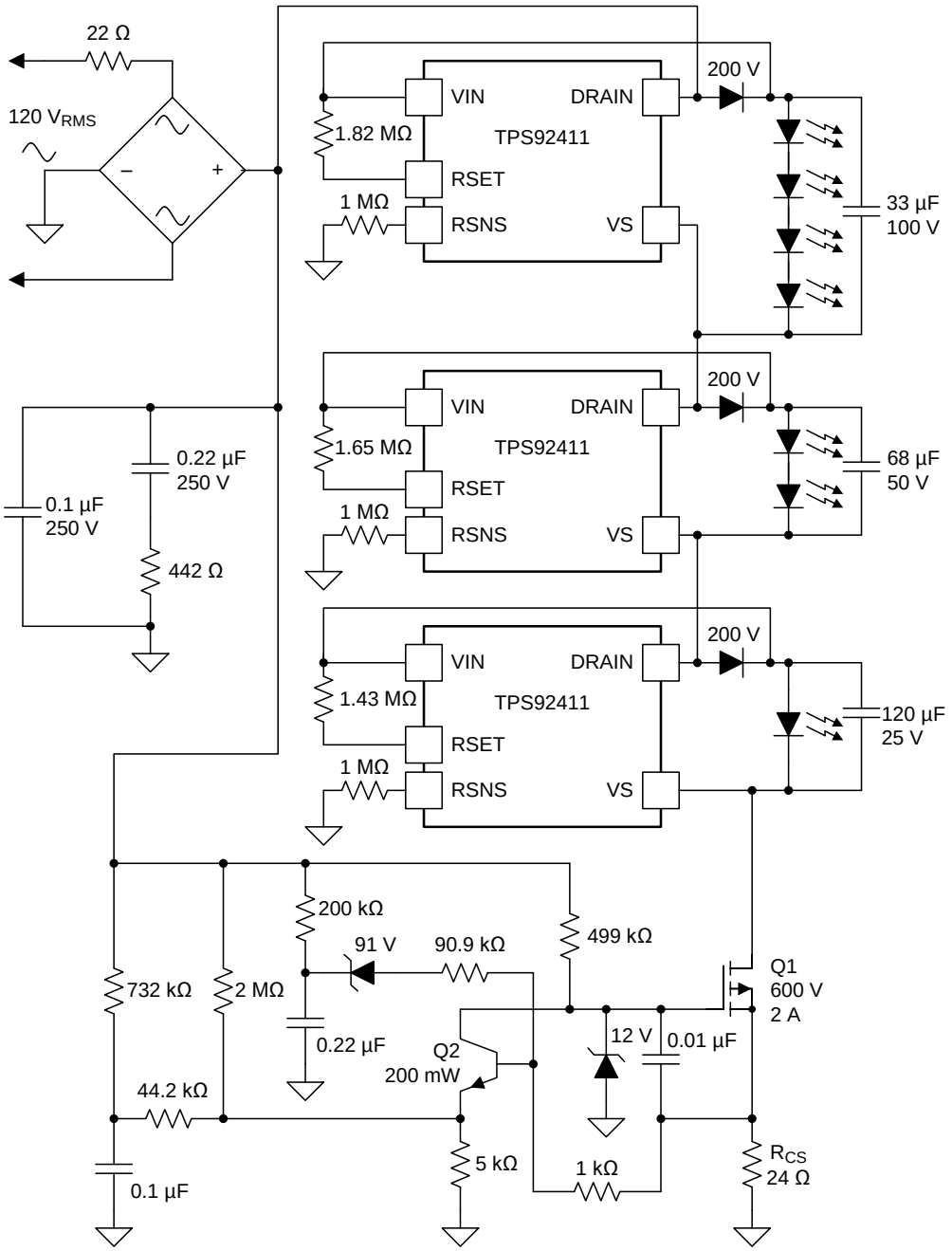

Figure 10. 120-VAC, Phase Dimmable 11.5-W Input with Discrete Linear Regulator

8.2.1.1 Design Requirements

For the 120-V application shown in Figure 10 the highest efficiency is obtained by using a high-voltage total LED stack to reduce losses in the linear regulator FET. The best current sharing efficiency between stacks can be achieved by using the lowest voltage stack at the bottom and making each stack voltage above 2 times the voltage of the stack below it. In this example 20-V LEDs are used. This effectively gives the lowest stack a total of 20 V, the middle stack a total of 40 V, and the upper stack a total of 80 V. The RSNS resistor is used to set a

Copyright © 2013–2014, Texas Instruments Incorporated

Typical Application (continued)

low voltage point so that when the VS pin voltage falls below this threshold (either from the AC line falling or a higher voltage stack switch above it turning OFF) the TPS92411 switch turns ON and bypasses the LEDs. During the ON-time, the LEDs are supplied current from the capacitor. The RSET voltage is used to set a threshold to detect when the input voltage crosses this threshold it turns OFF the switch and allows the LEDs to conduct current from the line and charge the bypass capacitor.

8.2.1.2 Detailed Design Procedure

- Set V_{RSNS} for all three TPS92411 devices at 4 V
- Set V_{RSET} for the bottom stack at 26 V (20 V stack plus 6 V headroom)
- Set V_{RSET} for the middle stack at 46 V (40 V stack plus 6 V headroom)
- Set V_{RSET} for the top stack at 86 V (80 V stack plus 6 V headroom)

Switching order as the rectified AC line voltage increases is shown in Table 1. Figure 11 illustrates when each switch turns ON or OFF.

8.2.1.2.1 Setting the Switching Thresholds (RSNS, RSET)

The TPS92411 features two threshold settings to allow for proper LED control. The first setting determines when the internal switch turns off and allows current to charge the capacitor and flow through the LEDs. The second setting determines when the switch turns on to shunt the LEDs and allow the capacitor to supply current. The lower switch turn-on threshold (V_{SNS}) should be set first using a resistor (R_{RSNS}) from the RSNS pin to system ground. For best efficiency set this threshold between 4 V and 6 V. Then the upper switch turn-off threshold (V_{VS}) can be set using a resistor (R_{RSET}) from the RSET pin to the VIN pin. Set this threshold approximately 6 V to 10 V above the LED stack voltage (V_{LED}). The RSET threshold should be greater than the LED stack voltage plus the value of the RSNS threshold to prevent errant switching. These thresholds can be set with resistance calculated using Equation 1 and Equation 2.

$$R_{SNS} = \frac{V_{SNS} + 0.21V}{|I_{RSNS}|} \tag{1}$$

$$R_{RSET} = \frac{(V_{LED} - 1.24\,V) \times 2 \times R_{SNS}}{V_{VS} + 0.21V} \tag{2}$$

Table 1. Switching Order on Rising Edge of Rectified 120-VAC (1)(2)

STACK		
TOP 80-V	MIDDLE 40-V	BOTTOM 20-V
0	0	0
0	0	1
0	1	0
0	1	1
1	0	0
1	0	1
1	1	0
1	1	1

(1) 0 denotes switch ON and LEDs bypassed and supplied by the capacitor.
(2) 1 denotes switch OFF and LEDs conducting from the line, capacitor charging up.

Copyright © 2013–2014, Texas Instruments Incorporated

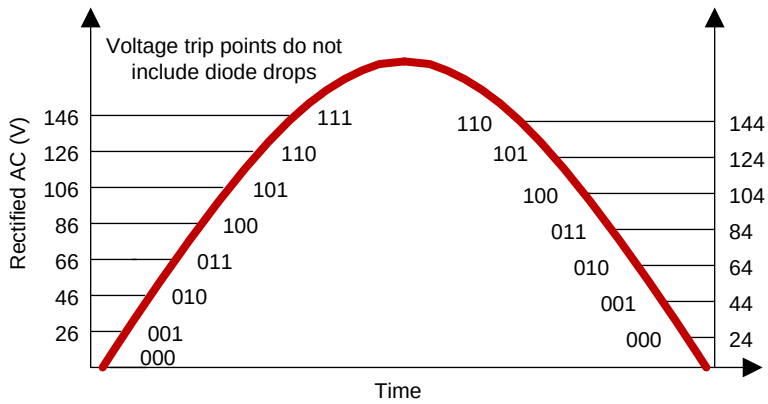

Figure 11. Switching Order on Rectified 120-VAC Waveform

The linear regulator in Figure 11 generates a current sense RMS voltage of approximately 2.3 V. The linear regulator RMS current is equal to the input current drawn from the AC line. For example, for a 11.5-W input power system the input current should be approximately 0.095 A and a 24-Ω resistor should be chosen for RCS. Other input power levels (P_{IN}) can be obtained using Equation 3.

$$R_{CS} = \frac{120\,V_{RMS} \times 2.3 V_{RMS}}{P_{IN}} \tag{3}$$

8.2.1.3 Application Curve

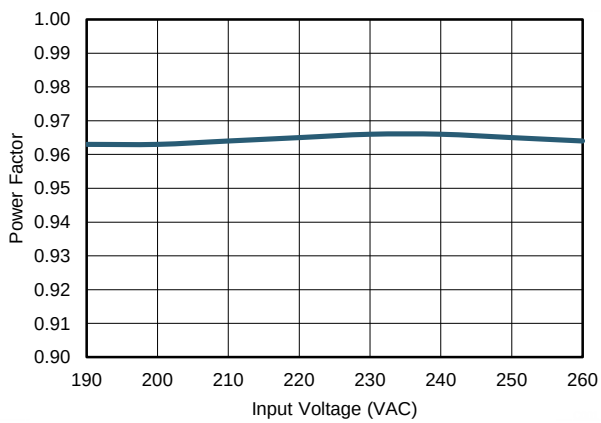

Figure 12. Power Factor vs. Input Voltage

Copyright © 2013–2014, Texas Instruments Incorporated

8.2.2 230-VAC, Phase Dimmable 16-W Input with Discrete Linear Regulator

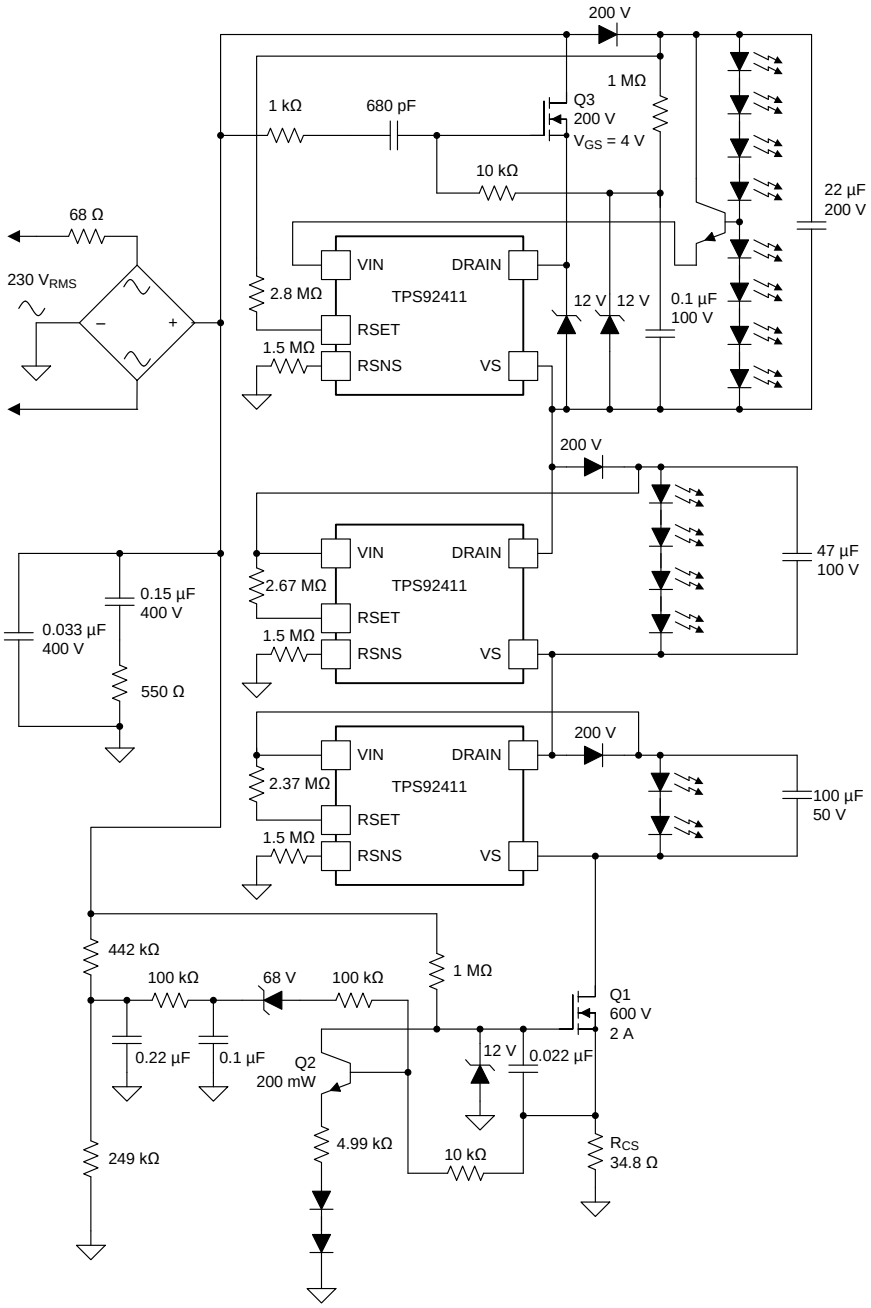

Figure 13. 230-VAC, Phase Dimmable 16-W Input with Discrete Linear Regulator

8.2.2.1 Design Requirements

In the 230-V application shown in Figure 13, the highest efficiency can be obtained by using a high-voltage total LED stack to reduce losses in the linear regulator FET. The best current sharing between stacks can be achieved by using the lowest voltage stack at the bottom and making each stack voltage above that two times that of the stack below it (as in described in the 120-V application). In this example, very good results can be obtained by setting the lowest stack at 40 V, the middle stack at 80 V, and adding a high-voltage cascode FET with the top stack and using 160 V. Use the RSNS pin to set a low voltage point so that when the VS pin of the

device falls below this threshold (either from the AC line falling or a higher voltage stack switch above it turning OFF) the TPS92411 switch turns ON and bypasses the LEDs. During the ON-time, the capacitor supplies current to the LEDs. The RSET voltage threshold for a 230-V application is generally set to approximately 8 V to 12 V above the LED stack voltage connected across the TPS92411 (for an RSNS voltage of 6 V). This threshold is higher than in the typical 120-V application to allow more headroom.

8.2.2.2 Detailed Design Procedure

- Set V_{RSNS} for all three TPS92411 devices at 6 V
- Set V_{RSET} for the bottom stack at 49 V (40 V stack plus 9 V headroom)
- Set V_{RSET} for the middle stack at 89 V (80 V stack plus 9 V headroom)
- Set V_{RSET} for the top stack at 169 V (160 V stack plus 9 V headroom)

Switching order as the rectified AC line voltage increases is shown in Table 2. Figure 14 illustrates when each switch turns ON or OFF.

Table 2. Switching Order on Rising Edge of the Rectified 230-VAC Waveform(1)(2)

STACK		
TOP 160-V	MIDDLE 80-V	BOTTOM 40-V
0	0	0
0	0	1
0	1	0
0	1	1
1	0	0
1	0	1
1	1	0
1	1	1

(1) 0 denotes switch ON and LEDs bypassed and supplied by the capacitor.
(2) 1 denotes switch OFF and LEDs conducting from the line, capacitor charging up.

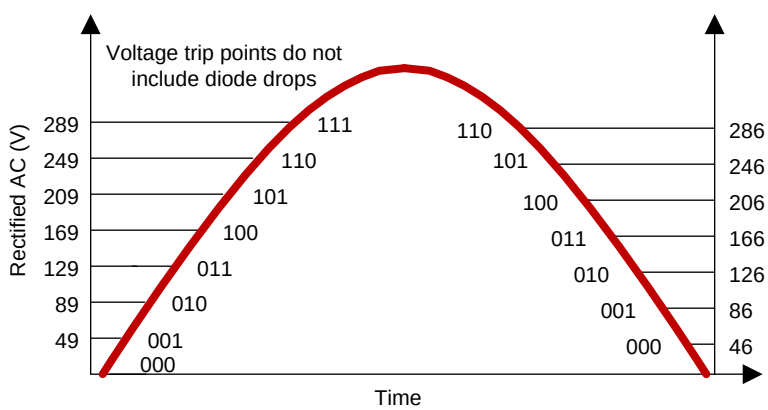

Figure 14. Switching Order on Rising Edge of the Rectified 230-VAC Waveform

The linear regulator in Figure 14 generates a current sense RMS voltage of 2.44 V. The linear regulator RMS current is equal to the input current drawn from the AC line. For example, for a 16-W input power system the input current should be approximately 0.07 A and a 34.8-Ω resistor should be chosen for R_{CS}. Other input power levels (P_{IN}) can be calculated using Equation 4.

$$R_{CS} = \frac{230\,V_{RMS} \times 2.44\,V_{RMS}}{P_{IN}} \tag{4}$$

Copyright © 2013–2014, Texas Instruments Incorporated

8.2.2.3 Application Curve

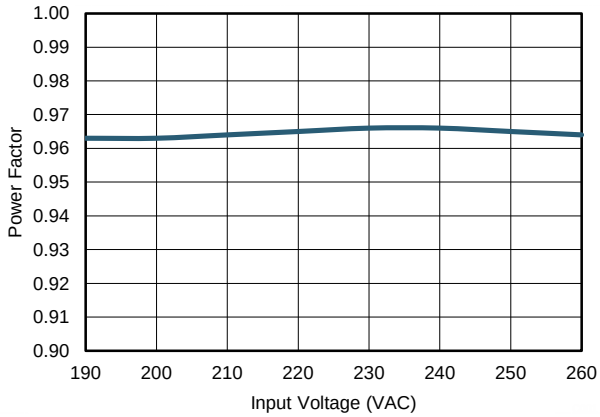

Figure 15. Power Factor Input Voltage

9 Power Supply Recommendations

For testing purposes any benchtop adjustable AC power supply with a power rating higher than what is required by the circuit is suitable. An example would be an Hewlett Packard 6811B or equivalent. An isolated supply is recommended for safety purposes.

10 Layout

10.1 Layout Guidelines

The TPS92411 allows for a simple layout, however some considerations should be taken. The RSET resistor should be connected directly between the RSET pin and VIN pin as close to the device as possible. The trace between the resistor and the RSET pin should be as short as possible. The trace from the RSNS pin to the RSNS resistor should also be as short as possible to minimize parasitic capacitances. The blocking diode should be placed between the DRAIN pin and the VIN pin and also located close to the device. Placement of the LED capacitor may depend on the physical design of the application, however it should be placed as close to the TPS92411 as the design allows to minimize parasitic inductances.

10.2 Layout Example

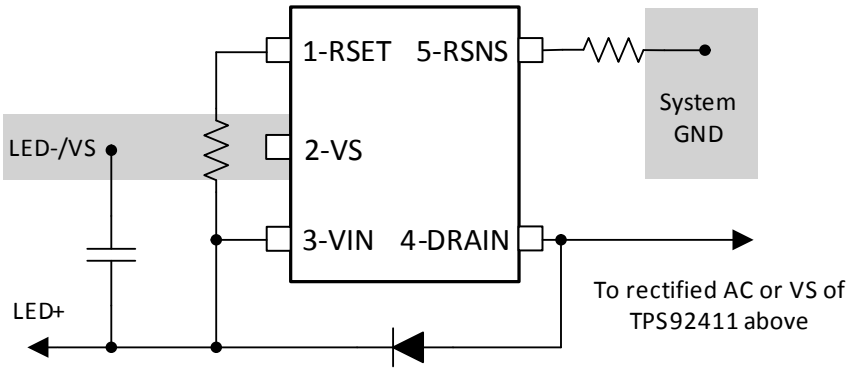

Figure 16. Recommended Component Placement (DBV)

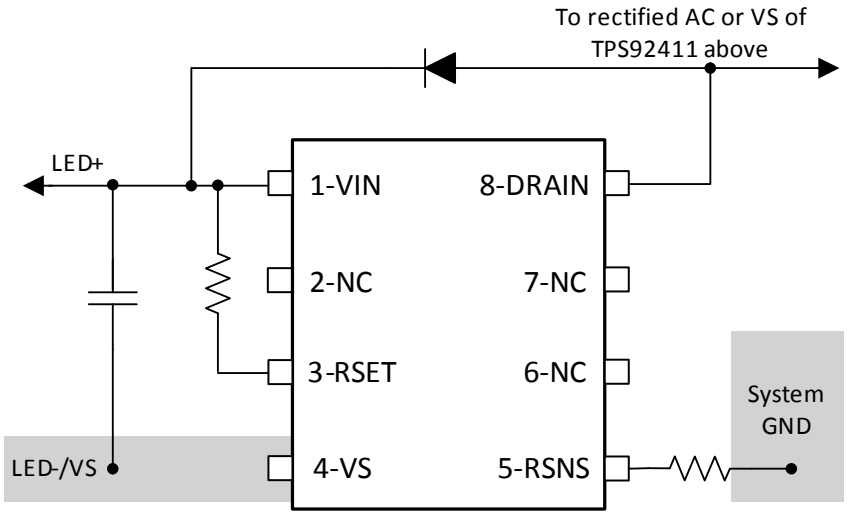

Figure 17. Recommended Component Placement (DDA)

Copyright © 2013–2014, Texas Instruments Incorporated

11 Device and Documentation Support

11.1 Related Links

The table below lists quick access links. Categories include technical documents, support and community resources, tools and software, and quick access to sample or buy.

Table 3. Related Links

PARTS	PRODUCT FOLDER	SAMPLE & BUY	TECHNICAL DOCUMENTS	TOOLS & SOFTWARE	SUPPORT & COMMUNITY
TPS92411	Click here	Click here	Click here	Click here	Click here
TPS92411P	Click here	Click here	Click here	Click here	Click here

11.2 Trademarks

All trademarks are the property of their respective owners.

11.3 Electrostatic Discharge Caution

These devices have limited built-in ESD protection. The leads should be shorted together or the device placed in conductive foam during storage or handling to prevent electrostatic damage to the MOS gates.

11.4 Glossary

SLYZ022 — *TI Glossary*.

This glossary lists and explains terms, acronyms, and definitions.

12 Mechanical, Packaging, and Orderable Information

The following pages include mechanical, packaging, and orderable information. This information is the most current data available for the designated devices. This data is subject to change without notice and revision of this document. For browser-based versions of this data sheet, refer to the left-hand navigation.

PACKAGING INFORMATION

Orderable part number	Status (1)	Material type (2)	Package | Pins	Package qty | Carrier	RoHS (3)	Lead finish/ Ball material (4)	MSL rating/ Peak reflow (5)	Op temp (°C)	Part marking (6)
TPS92411DBVR	Active	Production	SOT-23 (DBV) | 5	3000 | LARGE T&R	Yes	NIPDAU	Level-1-260C-UNLIM	-40 to 150	PB9Q
TPS92411DBVR.A	Active	Production	SOT-23 (DBV) | 5	3000 | LARGE T&R	Yes	NIPDAU	Level-1-260C-UNLIM	-40 to 150	PB9Q
TPS92411DBVT	Active	Production	SOT-23 (DBV) | 5	250 | SMALL T&R	Yes	NIPDAU	Level-1-260C-UNLIM	-40 to 150	PB9Q
TPS92411DBVT.A	Active	Production	SOT-23 (DBV) | 5	250 | SMALL T&R	Yes	NIPDAU	Level-1-260C-UNLIM	-40 to 150	PB9Q
TPS92411DDA	Active	Production	SO PowerPAD (DDA) | 8	75 | TUBE	Yes	NIPDAUAG	Level-2-260C-1 YEAR	-40 to 150	92411
TPS92411DDA.A	Active	Production	SO PowerPAD (DDA) | 8	75 | TUBE	Yes	NIPDAUAG	Level-2-260C-1 YEAR	-40 to 150	92411
TPS92411DDAR	Active	Production	SO PowerPAD (DDA) | 8	2500 | LARGE T&R	Yes	NIPDAUAG	Level-2-260C-1 YEAR	-40 to 150	92411
TPS92411DDAR.A	Active	Production	SO PowerPAD (DDA) | 8	2500 | LARGE T&R	Yes	NIPDAUAG	Level-2-260C-1 YEAR	-40 to 150	92411
TPS92411PDBVR	Active	Production	SOT-23 (DBV) | 5	3000 | LARGE T&R	Yes	NIPDAU	Level-1-260C-UNLIM	-40 to 150	PB8Q
TPS92411PDBVR.A	Active	Production	SOT-23 (DBV) | 5	3000 | LARGE T&R	Yes	NIPDAU	Level-1-260C-UNLIM	-40 to 150	PB8Q
TPS92411PDBVT	Active	Production	SOT-23 (DBV) | 5	250 | SMALL T&R	Yes	NIPDAU	Level-1-260C-UNLIM	-40 to 150	PB8Q
TPS92411PDBVT.A	Active	Production	SOT-23 (DBV) | 5	250 | SMALL T&R	Yes	NIPDAU	Level-1-260C-UNLIM	-40 to 150	PB8Q
TPS92411PDDA	Active	Production	SO PowerPAD (DDA) | 8	75 | TUBE	Yes	NIPDAUAG	Level-2-260C-1 YEAR	-40 to 150	92411P
TPS92411PDDA.A	Active	Production	SO PowerPAD (DDA) | 8	75 | TUBE	Yes	NIPDAUAG	Level-2-260C-1 YEAR	-40 to 150	92411P
TPS92411PDDAR	Active	Production	SO PowerPAD (DDA) | 8	2500 | LARGE T&R	Yes	NIPDAUAG	Level-2-260C-1 YEAR	-40 to 150	92411P
TPS92411PDDAR.A	Active	Production	SO PowerPAD (DDA) | 8	2500 | LARGE T&R	Yes	NIPDAUAG	Level-2-260C-1 YEAR	-40 to 150	92411P

(1) **Status:** For more details on status, see our product life cycle.

(2) **Material type:** When designated, preproduction parts are prototypes/experimental devices, and are not yet approved or released for full production. Testing and final process, including without limitation quality assurance, reliability performance testing, and/or process qualification, may not yet be complete, and this item is subject to further changes or possible discontinuation. If available for ordering, purchases will be subject to an additional waiver at checkout, and are intended for early internal evaluation purposes only. These items are sold without warranties of any kind.

(3) **RoHS values:** Yes, No, RoHS Exempt. See the TI RoHS Statement for additional information and value definition.

(4) **Lead finish/Ball material:** Parts may have multiple material finish options. Finish options are separated by a vertical ruled line. Lead finish/Ball material values may wrap to two lines if the finish value exceeds the maximum column width.

(5) **MSL rating/Peak reflow:** The moisture sensitivity level ratings and peak solder (reflow) temperatures. In the event that a part has multiple moisture sensitivity ratings, only the lowest level per JEDEC standards is shown. Refer to the shipping label for the actual reflow temperature that will be used to mount the part to the printed circuit board.

(6) **Part marking:** There may be an additional marking, which relates to the logo, the lot trace code information, or the environmental category of the part.

Multiple part markings will be inside parentheses. Only one part marking contained in parentheses and separated by a "~" will appear on a part. If a line is indented then it is a continuation of the previous line and the two combined represent the entire part marking for that device.

Important Information and Disclaimer: The information provided on this page represents TI's knowledge and belief as of the date that it is provided. TI bases its knowledge and belief on information provided by third parties, and makes no representation or warranty as to the accuracy of such information. Efforts are underway to better integrate information from third parties. TI has taken and continues to take reasonable steps to provide representative and accurate information but may not have conducted destructive testing or chemical analysis on incoming materials and chemicals. TI and TI suppliers consider certain information to be proprietary, and thus CAS numbers and other limited information may not be available for release.

In no event shall TI's liability arising out of such information exceed the total purchase price of the TI part(s) at issue in this document sold by TI to Customer on an annual basis.

TAPE AND REEL INFORMATION

REEL DIMENSIONS

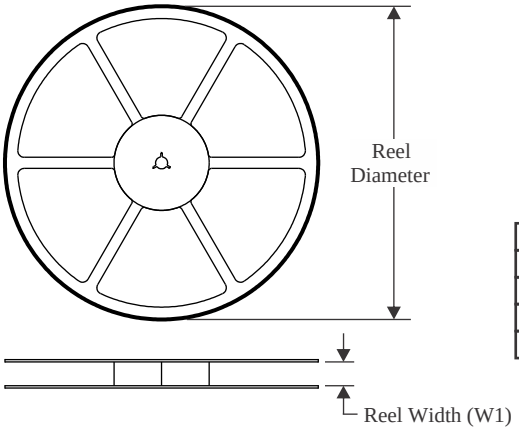

TAPE DIMENSIONS

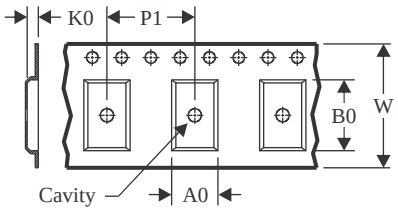

A0	Dimension designed to accommodate the component width
B0	Dimension designed to accommodate the component length
K0	Dimension designed to accommodate the component thickness
W	Overall width of the carrier tape
P1	Pitch between successive cavity centers

QUADRANT ASSIGNMENTS FOR PIN 1 ORIENTATION IN TAPE

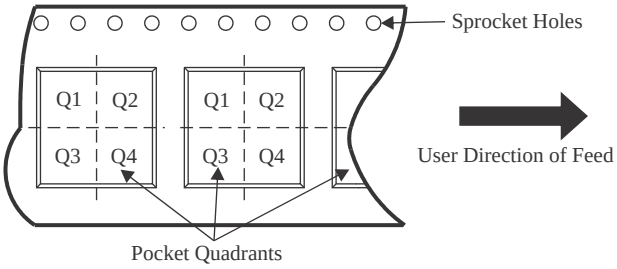

*All dimensions are nominal

Device	Package Type	Package Drawing	Pins	SPQ	Reel Diameter (mm)	Reel Width W1 (mm)	A0 (mm)	B0 (mm)	K0 (mm)	P1 (mm)	W (mm)	Pin1 Quadrant
TPS92411DBVR	SOT-23	DBV	5	3000	178.0	9.0	3.23	3.17	1.37	4.0	8.0	Q3
TPS92411DBVT	SOT-23	DBV	5	250	178.0	9.0	3.23	3.17	1.37	4.0	8.0	Q3
TPS92411DDAR	SO PowerPAD	DDA	8	2500	330.0	12.8	6.4	5.2	2.1	8.0	12.0	Q1
TPS92411PDBVR	SOT-23	DBV	5	3000	178.0	9.0	3.23	3.17	1.37	4.0	8.0	Q3
TPS92411PDBVT	SOT-23	DBV	5	250	178.0	9.0	3.23	3.17	1.37	4.0	8.0	Q3
TPS92411PDDAR	SO PowerPAD	DDA	8	2500	330.0	12.8	6.4	5.2	2.1	8.0	12.0	Q1

TAPE AND REEL BOX DIMENSIONS

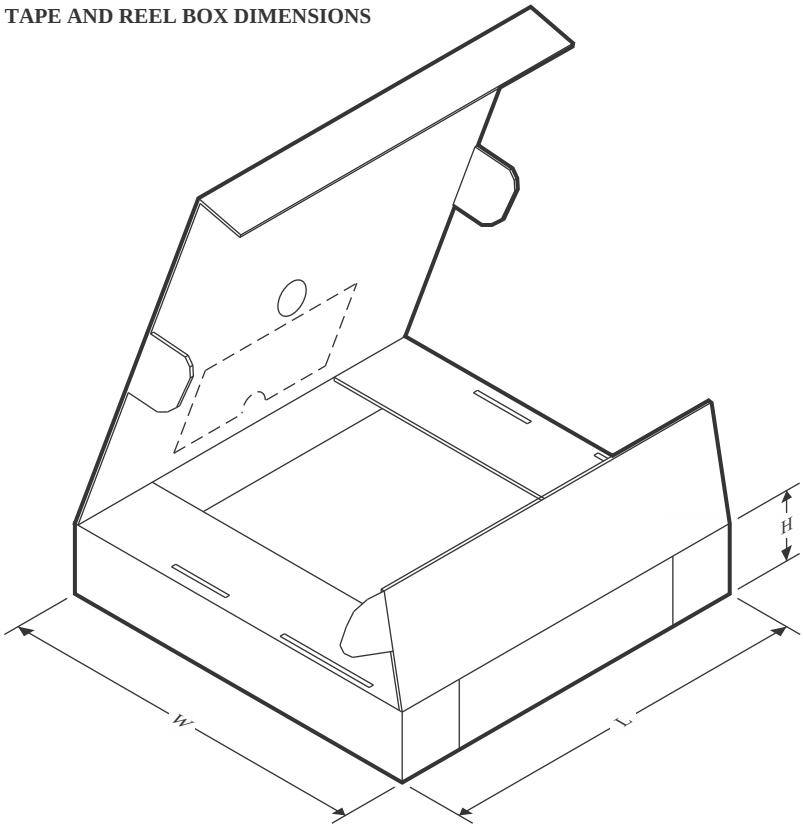

*All dimensions are nominal

Device	Package Type	Package Drawing	Pins	SPQ	Length (mm)	Width (mm)	Height (mm)
TPS92411DBVR	SOT-23	DBV	5	3000	180.0	180.0	18.0
TPS92411DBVT	SOT-23	DBV	5	250	180.0	180.0	18.0
TPS92411DDAR	SO PowerPAD	DDA	8	2500	366.0	364.0	50.0
TPS92411PDBVR	SOT-23	DBV	5	3000	180.0	180.0	18.0
TPS92411PDBVT	SOT-23	DBV	5	250	180.0	180.0	18.0
TPS92411PDDAR	SO PowerPAD	DDA	8	2500	366.0	364.0	50.0

TUBE

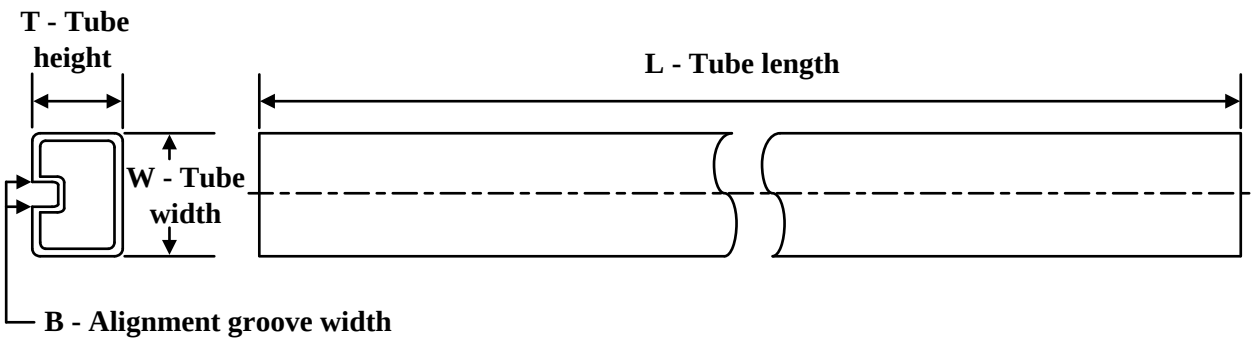

*All dimensions are nominal

Device	Package Name	Package Type	Pins	SPQ	L (mm)	W (mm)	T (µm)	B (mm)
TPS92411DDA	DDA	HSOIC	8	75	517	7.87	635	4.25
TPS92411DDA.A	DDA	HSOIC	8	75	517	7.87	635	4.25
TPS92411PDDA	DDA	HSOIC	8	75	517	7.87	635	4.25
TPS92411PDDA.A	DDA	HSOIC	8	75	517	7.87	635	4.25

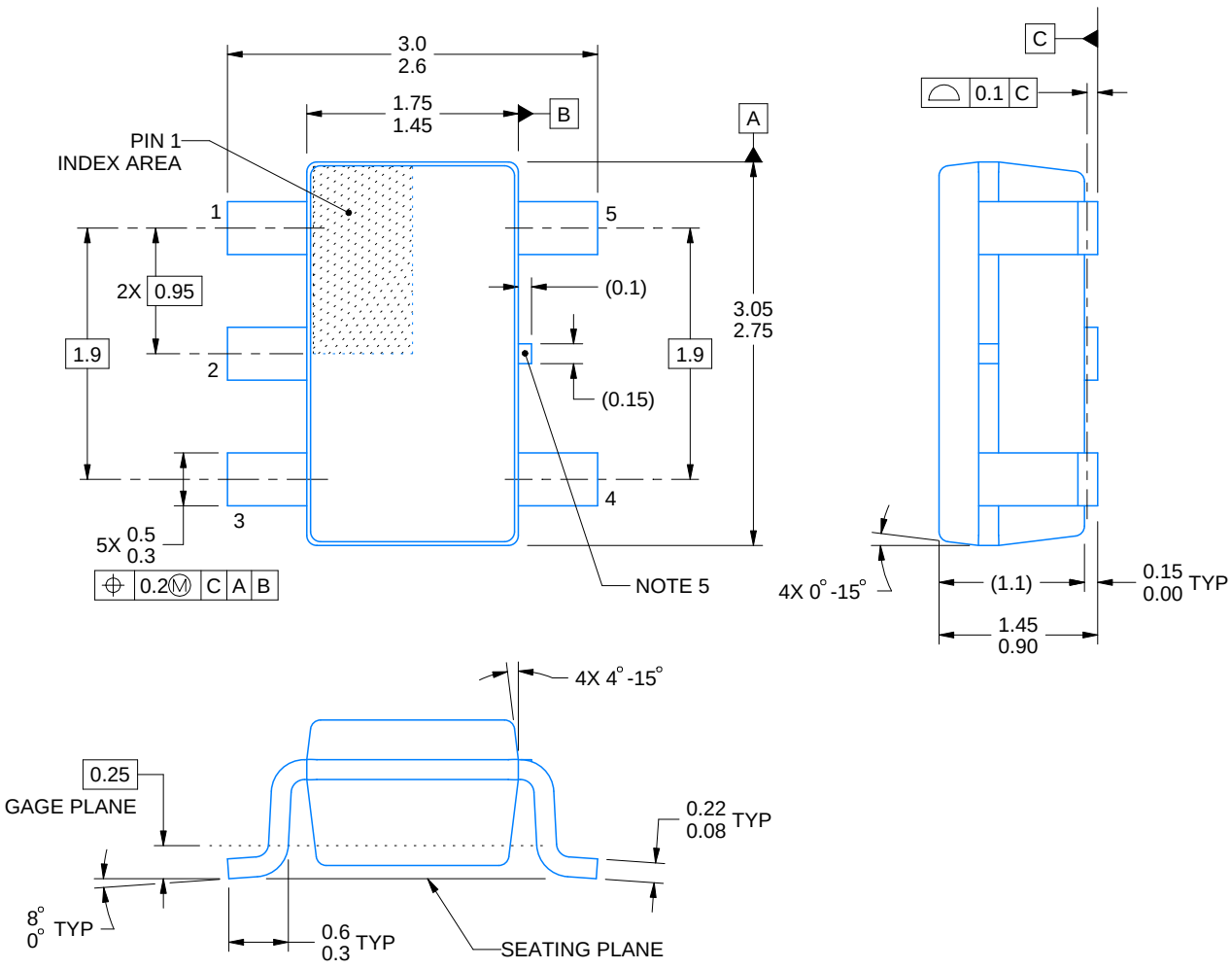

4214839/K 08/2024

NOTES:

1. All linear dimensions are in millimeters. Any dimensions in parenthesis are for reference only. Dimensioning and tolerancing per ASME Y14.5M.
2. This drawing is subject to change without notice.
3. Refernce JEDEC MO-178.
4. Body dimensions do not include mold flash, protrusions, or gate burrs. Mold flash, protrusions, or gate burrs shall not exceed 0.25 mm per side.
5. Support pin may differ or may not be present.

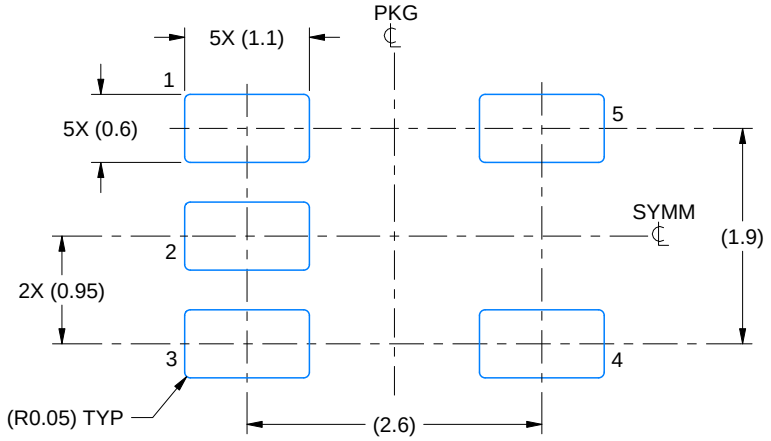

LAND PATTERN EXAMPLE
EXPOSED METAL SHOWN
SCALE:15X

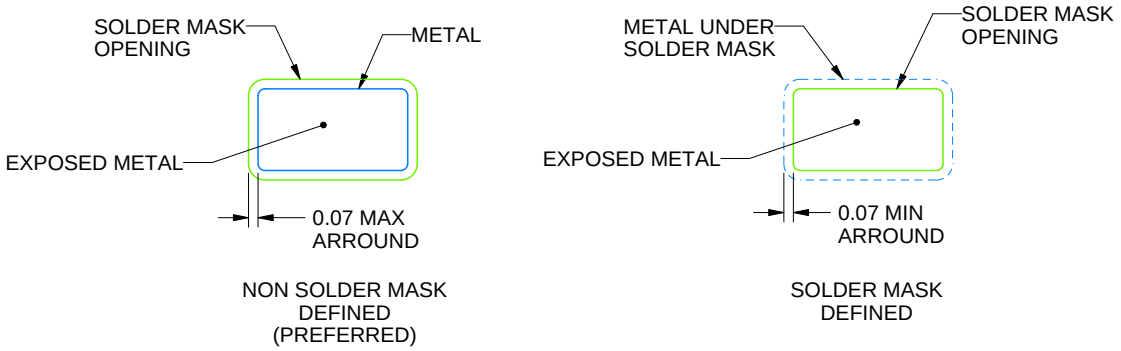

SOLDER MASK DETAILS

4214839/K 08/2024

NOTES: (continued)

6. Publication IPC-7351 may have alternate designs.
7. Solder mask tolerances between and around signal pads can vary based on board fabrication site.

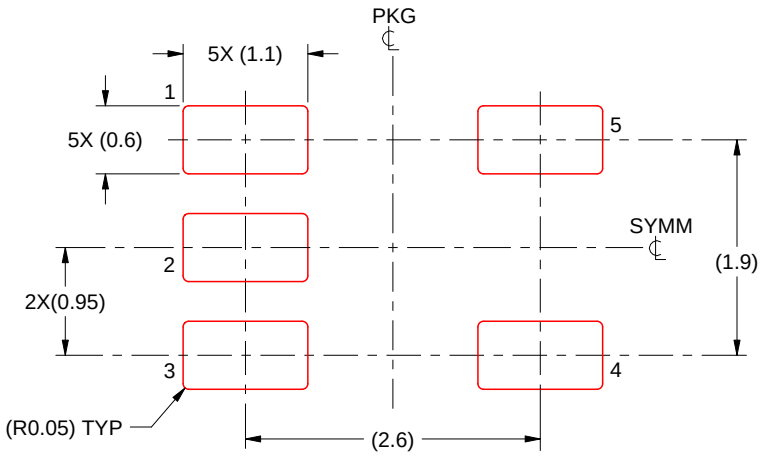

SOLDER PASTE EXAMPLE
BASED ON 0.125 mm THICK STENCIL
SCALE:15X

4214839/K 08/2024

NOTES: (continued)

8. Laser cutting apertures with trapezoidal walls and rounded corners may offer better paste release. IPC-7525 may have alternate design recommendations.
9. Board assembly site may have different recommendations for stencil design.

DDA 8 PowerPAD™ SOIC - 1.7 mm max height

PLASTIC SMALL OUTLINE

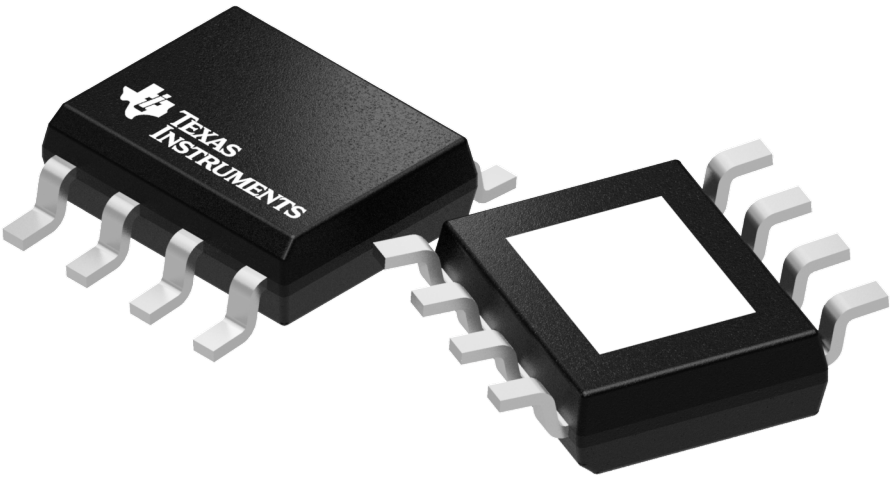

Images above are just a representation of the package family, actual package may vary.
Refer to the product data sheet for package details.

DDA (R-PDSO-G8) PowerPAD™ PLASTIC SMALL-OUTLINE

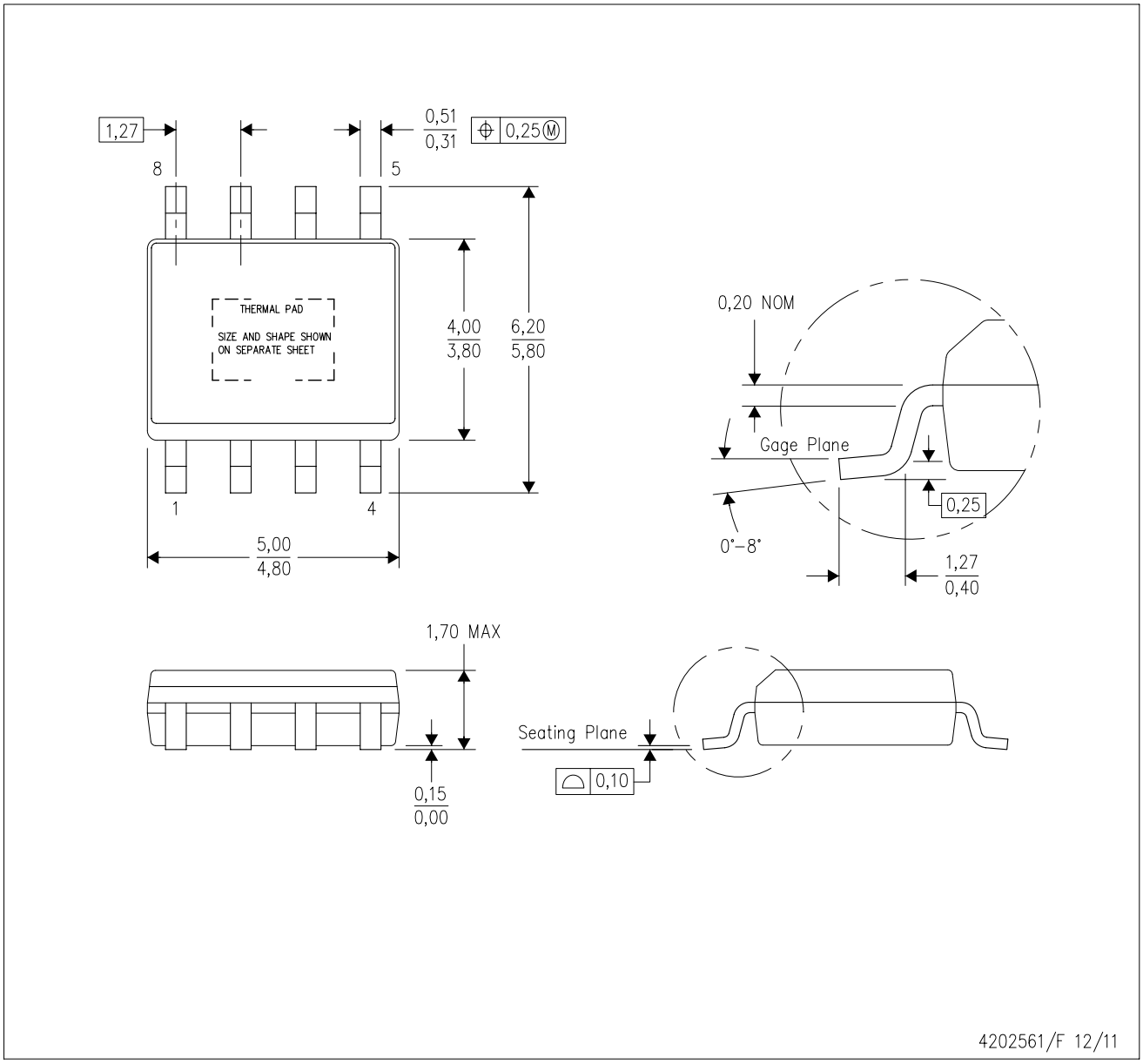

NOTES:
A. All linear dimensions are in millimeters. Dimensioning and tolerancing per ASME Y14.5–1994.
B. This drawing is subject to change without notice.
C. Body dimensions do not include mold flash or protrusion not to exceed 0,15.
D. This package is designed to be soldered to a thermal pad on the board. Refer to Technical Brief, PowerPad Thermally Enhanced Package, Texas Instruments Literature No. SLMA002 for information regarding recommended board layout. This document is available at www.ti.com <http://www.ti.com>.
E. See the additional figure in the Product Data Sheet for details regarding the exposed thermal pad features and dimensions.
F. This package complies to JEDEC MS-012 variation BA

PowerPAD is a trademark of Texas Instruments.

DDA (R-PDSO-G8) PowerPAD™ PLASTIC SMALL OUTLINE

THERMAL INFORMATION

This PowerPAD™ package incorporates an exposed thermal pad that is designed to be attached to a printed circuit board (PCB). The thermal pad must be soldered directly to the PCB. After soldering, the PCB can be used as a heatsink. In addition, through the use of thermal vias, the thermal pad can be attached directly to the appropriate copper plane shown in the electrical schematic for the device, or alternatively, can be attached to a special heatsink structure designed into the PCB. This design optimizes the heat transfer from the integrated circuit (IC).

For additional information on the PowerPAD package and how to take advantage of its heat dissipating abilities, refer to Technical Brief, PowerPAD Thermally Enhanced Package, Texas Instruments Literature No. SLMA002 and Application Brief, PowerPAD Made Easy, Texas Instruments Literature No. SLMA004. Both documents are available at www.ti.com.

The exposed thermal pad dimensions for this package are shown in the following illustration.

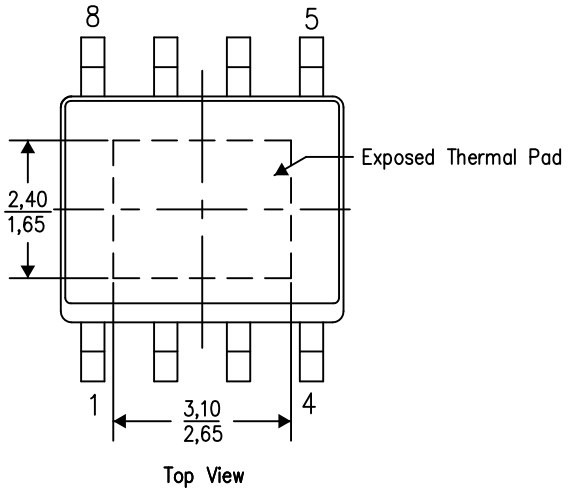

Exposed Thermal Pad Dimensions

4206322-6/L 05/12

NOTE: A. All linear dimensions are in millimeters

PowerPAD is a trademark of Texas Instruments

DDA (R–PDSO–G8) PowerPAD™ PLASTIC SMALL OUTLINE

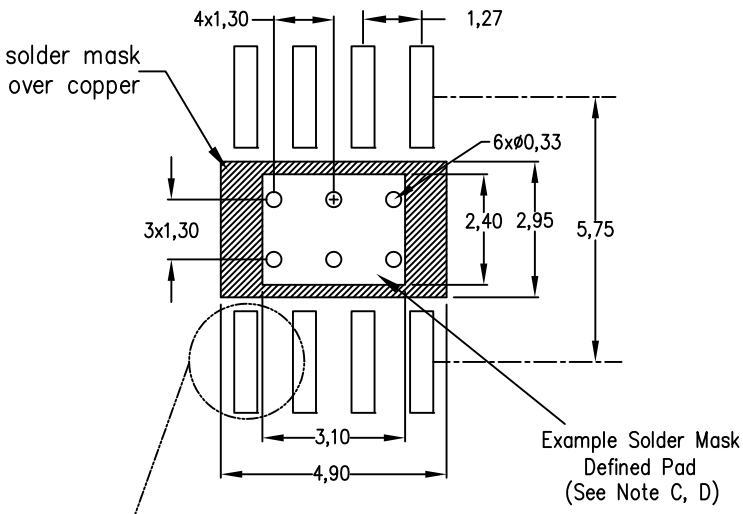

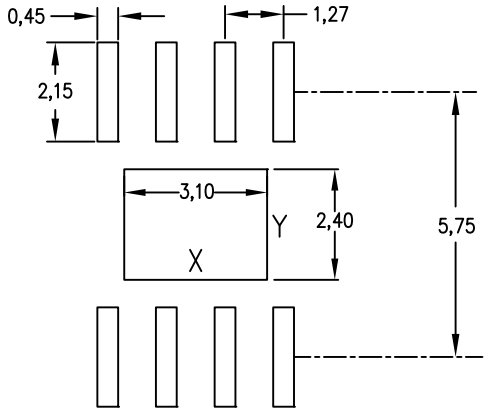

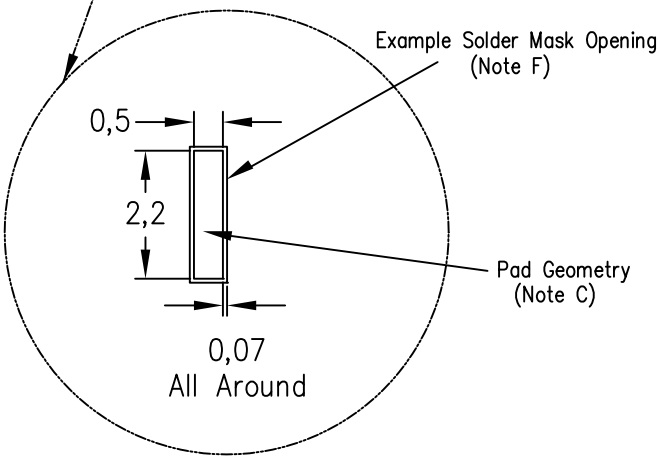

Center Power Pad Solder Stencil Opening		
Stencil Thickness	X	Y
0.1mm	3.3	2.6
0.127mm	3.1	2.4
0.152mm	2.9	2.2
0.178mm	2.8	2.1

4208951–6/D 04/12

NOTES:
A. All linear dimensions are in millimeters.
B. This drawing is subject to change without notice.
C. Publication IPC–7351 is recommended for alternate designs.
D. This package is designed to be soldered to a thermal pad on the board. Refer to Technical Brief, PowerPad Thermally Enhanced Package, Texas Instruments Literature No. SLMA002, SLMA004, and also the Product Data Sheets for specific thermal information, via requirements, and recommended board layout. These documents are available at www.ti.com <http://www.ti.com>. Publication IPC–7351 is recommended for alternate designs.
E. Laser cutting apertures with trapezoidal walls and also rounding corners will offer better paste release. Customers should contact their board assembly site for stencil design recommendations. Example stencil design based on a 50% volumetric metal load solder paste. Refer to IPC–7525 for other stencil recommendations.
F. Customers should contact their board fabrication site for solder mask tolerances between and around signal pads.

PowerPAD is a trademark of Texas Instruments.

IMPORTANT NOTICE AND DISCLAIMER

TI PROVIDES TECHNICAL AND RELIABILITY DATA (INCLUDING DATA SHEETS), DESIGN RESOURCES (INCLUDING REFERENCE DESIGNS), APPLICATION OR OTHER DESIGN ADVICE, WEB TOOLS, SAFETY INFORMATION, AND OTHER RESOURCES “AS IS” AND WITH ALL FAULTS, AND DISCLAIMS ALL WARRANTIES, EXPRESS AND IMPLIED, INCLUDING WITHOUT LIMITATION ANY IMPLIED WARRANTIES OF MERCHANTABILITY, FITNESS FOR A PARTICULAR PURPOSE OR NON-INFRINGEMENT OF THIRD PARTY INTELLECTUAL PROPERTY RIGHTS.

These resources are intended for skilled developers designing with TI products. You are solely responsible for (1) selecting the appropriate TI products for your application, (2) designing, validating and testing your application, and (3) ensuring your application meets applicable standards, and any other safety, security, regulatory or other requirements.

These resources are subject to change without notice. TI grants you permission to use these resources only for development of an application that uses the TI products described in the resource. Other reproduction and display of these resources is prohibited. No license is granted to any other TI intellectual property right or to any third party intellectual property right. TI disclaims responsibility for, and you will fully indemnify TI and its representatives against, any claims, damages, costs, losses, and liabilities arising out of your use of these resources.

TI’s products are provided subject to TI’s Terms of Sale or other applicable terms available either on ti.com or provided in conjunction with such TI products. TI’s provision of these resources does not expand or otherwise alter TI’s applicable warranties or warranty disclaimers for TI products.

TI objects to and rejects any additional or different terms you may have proposed.

Mailing Address: Texas Instruments, Post Office Box 655303, Dallas, Texas 75265
Copyright © 2025, Texas Instruments Incorporated