SN74LV367A Hex Buffers and Line Drivers With 3-State Outputs

1 Applications

- Output expansion
- LED matrix control
- 7-segment display control

2 Features

- V_{CC} operation of 2 V to 5.5
- Maximum t_{pd} of 7 ns at 5 V
- Typical V_{OLP} (output ground bounce) < 0.8 V at V_{CC} = 3.3 V, T_A = 25°C
- Typical V_{OHV} (output V_{OH} undershoot) > 2.3 V at V_{CC} = 3.3 V, T_A = 25°C
- Support mixed-mode voltage operation on all ports
- Latch-up performance exceeds 250 mA per JESD 17

3 Description

The ’LV367A devices are hex buffers and line drivers designed for 2 V to 5.5 V V_{CC} operation.

Package Information(1)

PART NUMBER	PACKAGE	BODY SIZE (NOM)
SN74LV367A	D (SOIC, 16)	9 mm × 3.90 mm
	DGV (TVSOP ,16)	3.60 mm × 4.40 mm
	NS (SOP, 16)	10.20 mm x 5.30 mm
	PW (TSSOP, 16)	5.00 mm x 4.40 mm

(1) For all available packages, see the orderable addendum at the end of the data sheet.

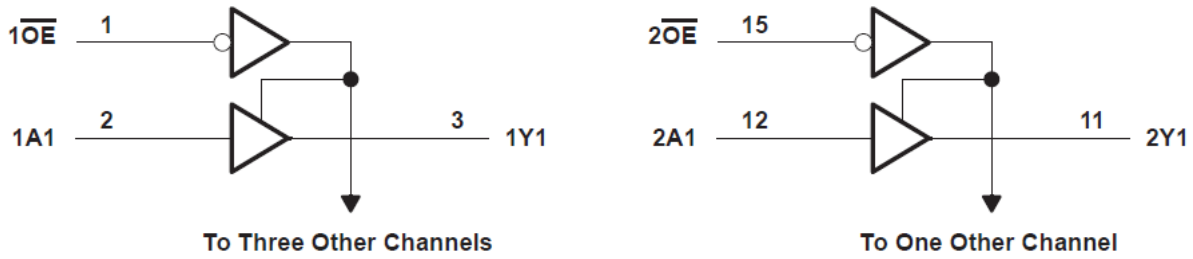

Logic Diagram (Positive Logic)

An IMPORTANT NOTICE at the end of this data sheet addresses availability, warranty, changes, use in safety-critical applications, intellectual property matters and other important disclaimers. UNLESS OTHERWISE NOTED, this document contains PRODUCTION DATA.

Table of Contents

1 Applications.....1
2 Features.....1
3 Description.....1
4 Revision History.....2
5 Pin Configurations and Functions.....3
6 Specifications.....4
6.1 Absolute Maximum Ratings.....4
6.2 ESD Ratings.....4
6.3 Recommended Operating Conditions.....5
6.4 Thermal Information.....5
6.5 Electrical Characteristics.....6
6.6 Switching Characteristics, V_{CC} = 2.5 V ± 0.2 V.....7
6.7 Switching Characteristics, V_{CC} = 3.3 V ± 0.3 V.....7
6.8 Switching Characteristics, V_{CC} = 5 V ± 0.5 V.....7
6.9 Noise Characteristics.....7
6.10 Operating Characteristics.....8
6.11 Typical Characteristics.....8
7 Parameter Measurement Information.....9
8 Detailed Description.....10
8.1 Overview.....10
8.2 Functional Block Diagram.....10
8.3 Feature Description.....11
8.4 Device Functional Modes.....12
9 Application and Implementation.....13
9.1 Application Information.....13
9.2 Typical Application.....13
9.3 Power Supply Recommendations.....13
9.4 Layout.....13
10 Device and Documentation Support.....15
10.1 Documentation Support.....15
10.2 Receiving Notification of Documentation Updates.....15
10.3 Support Resources.....15
10.4 Trademarks.....15
10.5 Electrostatic Discharge Caution.....15
10.6 Glossary.....15
11 Mechanical, Packaging, and Orderable Information.....15

4 Revision History

NOTE: Page numbers for previous revisions may differ from page numbers in the current version.

Changes from Revision H (December 2022) to Revision I (March 2023)	Page
• Removed DB package from *Package Information* table and updated structural layout of document	1
• Updated thermal values for D package from RθJA = 73 to 107.7, all values in °C/W	5

Changes from Revision G (April 1998) to Revision H (December 2022)	Page
• Updated the format of tables, figures, and cross-references throughout the document	1

Copyright © 2023 Texas Instruments Incorporated

5 Pin Configurations and Functions

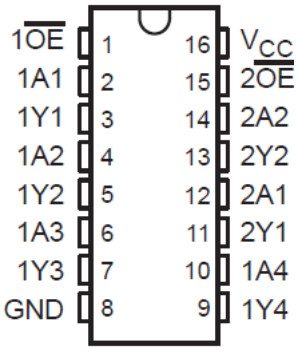

Figure 5-1. D, DGV, NS, or PW Package (Top View)

Table 5-1. Pin Functions

PIN		TYPE	DESCRIPTION
NO.	NAME		
1	1 $\overline{OE}$	I	Output Enable 1
2	1A1	I	1A1 Input
3	1Y1	O	1Y1 Output
4	1A2	I	1A2 Input
5	1Y2	O	1Y2 Output
6	1A3	I	1A3 Input
7	1Y3	O	1Y3 Output
8	GND	—	Ground Pin
9	1Y4	O	1Y4 Output
10	1A4	I	1A4 Input
11	2Y1	O	2Y1 Output
12	2A1	I	2A1 Input
13	2Y2	O	2Y2 Output
14	2A2	I	2A2 Input
15	2 $\overline{OE}$	I	Output Enable 2
16	V_{CC}	—	Power Pin

Copyright © 2023 Texas Instruments Incorporated

6 Specifications

6.1 Absolute Maximum Ratings

over operating free-air temperature range (unless otherwise noted)[1]

			MIN	MAX	UNIT
V_{CC}	Supply voltage range		–0.5	7	V
V_I	Input voltage range[2]		–0.5	7	V
V_O	Voltage range applied to any output in the high-impedance or power-off state[2]		–0.5	7	V
V_O	Output voltage range applied in the high or low state[2] [3]		–0.5	V_{CC} + 0.5	V
I_{IK}	Input clamp current	V_I < 0		–20	mA
I_{OK}	Output clamp current	V_O < 0		–50	mA
I_O	Continuous output current	V_O = 0 to V_{CC}		±35	mA
	Continuous current through V_{CC} or GND			±70	mA
T_{stg}	Storage temperature range		–65	150	°C

(1) Stresses beyond those listed under *Absolute Maximum Ratings* may cause permanent damage to the device. These are stress ratings only, and functional operation of the device at these or any other conditions beyond those indicated under *Recommended Operating Conditions* is not implied. Exposure to absolute-maximum-rated conditions for extended periods may affect device reliability.
(2) The input and output negative-voltage ratings may be exceeded if the input and output current ratings are observed.
(3) This value is limited to 5.5-V maximum.

6.2 ESD Ratings

			VALUE	UNIT
$V_{(ESD)}$	Electrostatic discharge	Human-body model (HBM), per ANSI/ESDA/JEDEC JS-001 [1]	±2000	V
		Machine Model (MM), per JEDEC specification	±200	
		Charged-device model (CDM), per ANSI/ESDA/JEDEC JS-002 [2]	±1000	

(1) JEDEC document JEP155 states that 500-V HBM allows safe manufacturing with a standard ESD control process.
(2) JEDEC document JEP157 states that 250-V CDM allows safe manufacturing with a standard ESD control process.

Copyright © 2023 Texas Instruments Incorporated

6.3 Recommended Operating Conditions

over operating free-air temperature range (unless otherwise noted)[1]

			MIN	MAX	UNIT
V_{CC}	Supply voltage		2	5.5	V
V_{IH}	High-level input voltage	V_{CC} = 2 V	1.5		V
		V_{CC} = 2.3 V to 2.7 V	V_{CC} × 0.7		
		V_{CC} = 3 V to 3.6 V	V_{CC} × 0.7		
		V_{CC} = 4.5 V to 5.5 V	V_{CC} × 0.7		
V_{IL}	Low-level input voltage	V_{CC} = 2 V		0.5	V
		V_{CC} = 2.3 V to 2.7 V		V_{CC} × 0.3	
		V_{CC} = 3 V to 3.6 V		V_{CC} × 0.3	
		V_{CC} = 4.5 V to 5.5 V		V_{CC} × 0.3	
V_I	Input voltage		0	5.5	V
V_O	Output voltage	High or low state	0	V_{CC}	V
		3-state	0	5.5	
I_{OH}	High-level output current	V_{CC} = 2 V		–50	µA
		V_{CC} = 2.3 V to 2.7 V		–2	mA
		V_{CC} = 3 V to 3.6 V		–8	
		V_{CC} = 4.5 V to 5.5 V		–16	
I_{OL}	Low-level output current	V_{CC} = 2 V		50	µA
		V_{CC} = 2.3 V to 2.7 V		2	mA
		V_{CC} = 3 V to 3.6 V		8	
		V_{CC} = 4.5 V to 5.5 V		16	
Δt/Δv	Input transition rise or fall rate	V_{CC} = 2.3 V to 2.7 V		200	ns/V
		V_{CC} = 3 V to 3.6 V		100	
		V_{CC} = 4.5 V to 5.5 V		20	
T_A	Operating free-air temperature		–40	85	°C

(1) All unused inputs of the device must be held at V_{CC} or GND to ensure proper device operation. Refer to the TI application report, *Implications of Slow or Floating CMOS Inputs*.

6.4 Thermal Information

THERMAL METRIC[1]		SN74LV367A				UNIT
		D	DGV	NS	PW	
		16 PINS	16 PINS	16 PINS	16 PINS	
$R_{\theta JA}$	Junction-to-ambient thermal resistance	107.7	120	64	131.2	°C/W

(1) For more information about traditional and new thermal metrics, see the *IC Package Thermal Metrics* application report (SPRA953).

Copyright © 2023 Texas Instruments Incorporated

6.5 Electrical Characteristics

over recommended operating free-air temperature range (unless otherwise noted)

PARAMETER	TEST CONDITIONS		V_{CC}	SN74LV367A			UNIT
				MIN	TYP	MAX	
V_{OH}	I_{OH} = –50 µA		2 V to 5.5 V	V_{CC} – 0.1			V
	I_{OH} = –2 mA		2.3 V	2			
	I_{OH} = –8 mA		3 V	2.48			
	I_{OH} = –16 mA		4.5	3.8			
V_{OL}	I_{OL} = 50 µA		2 V to 5.5 V			0.1	V
	I_{OL} = 2 mA		2.3 V			0.4	
	I_{OL} = 8 mA		3 V			0.44	
	I_{OL} = 16 mA		4.5 V			0.55	
I_I	V_I= 5.5 V or GND		0 to 5.5 V			±1	µA
I_{OZ}	V_O = V_{CC} or GND		5.5 V			±5	µA
I_{CC}	V_I = V_{CC} or GND,	I_O = 0	5.5 V			20	µA
I_{off}	V_O= or V_O = 0 to 5.5 V		0			5	µA
C_i	V_I = V_{CC} or GND		3.3 V		3		pF
C_O	V_I = V_{CC} or GND		3.3 V		5.2		pF

Copyright © 2023 Texas Instruments Incorporated

6.6 Switching Characteristics, V_{CC} = 2.5 V ± 0.2 V

over recommended operating free-air temperature range (unless otherwise noted)

PARAMETER	FROM (INPUT)	TO (OUTPUT)	LOAD CAPACITANCE	T_A = 25°C			SN74LV367A		UNIT
				MIN	TYP	MAX	MIN	MAX	
t_{pd}	A	Y	C_L = 15 pF		6.4	12.7	1	16	ns
t_{en}	$\overline{OE}$	Y			6.9	14.9	1	20	
t_{dis}	$\overline{OE}$	Y			6.4	14.9	1	20	
t_{pd}	A	Y	C_L = 50 pF		8.6	17.5	1	21	ns
t_{en}	$\overline{OE}$	Y			9.4	19.7	1	25	
t_{dis}	$\overline{OE}$	Y			10.1	19.7	1	25	
$t_{sk(o)}$						2		2	

6.7 Switching Characteristics, V_{CC} = 3.3 V ± 0.3 V

over recommended operating free-air temperature range (unless otherwise noted)

PARAMETER	FROM (INPUT)	TO (OUTPUT)	LOAD CAPACITANCE	T_A = 25°C			SN74LV367A		UNIT
				MIN	TYP	MAX	MIN	MAX	
t_{pd}	A	Y	C_L = 15 pF		4.7	8.3	1	10	ns
t_{en}	$\overline{OE}$	Y			5.1	10.5	1	12.5	
t_{dis}	$\overline{OE}$	Y			4.9	10.5	1	12.5	
t_{pd}	A	Y	C_L = 50 pF		6.2	11.8	1	13.5	ns
t_{en}	$\overline{OE}$	Y			6.8	14	1	16	
t_{dis}	$\overline{OE}$	Y			7.3	13.6	1	15.5	
$t_{sk(o)}$						1.5		1.5	

6.8 Switching Characteristics, V_{CC} = 5 V ± 0.5 V

over recommended operating free-air temperature range (unless otherwise noted)

PARAMETER	FROM (INPUT)	TO (OUTPUT)	LOAD CAPACITANCE	T_A = 25°C			SN74LV367A		UNIT
				MIN	TYP	MAX	MIN	MAX	
t_{pd}	A	Y	C_L = 15 pF		3.6	5.9	1	7	ns
t_{en}	$\overline{OE}$	Y			3.8	7.2	1	8.5	
t_{dis}	$\overline{OE}$	Y			2.6	7.2	0	8.5	
t_{pd}	A	Y	C_L = 50 pF		4.5	7.9	1	9	ns
t_{en}	$\overline{OE}$	Y			4.9	9.2	1	10.5	
t_{dis}	$\overline{OE}$	Y			4.5	9.2	0	10.5	
$t_{sk(o)}$						1		1	

6.9 Noise Characteristics

V_{CC} = 3.3 V, C_L = 50 pF, T_A = 25°C

PARAMETER		MIN	TYP	MAX	UNIT
$V_{OL(P)}$	Quiet output, maximum dynamic V_{OL}		0.3	0.8	V
$V_{OL(V)}$	Quiet output, minimum dynamic V_{OL}		–0.3	–0.8	V
$V_{OH(V)}$	Quiet output, minimum dynamic V_{OH}		3		V
$V_{IH(D)}$	High-level dynamic input voltage	2.31			V
$V_{IL(D)}$	Low-level dynamic input voltage			0.99	V

Copyright © 2023 Texas Instruments Incorporated

6.10 Operating Characteristics

T_A = 25°C

PARAMETER		TEST CONDITIONS		V_{CC}	TYP	UNIT
C_{pd}	Power dissipation capacitance	C_L = 50 pF,	f = 10 MHz	3.3 V	14.9	pF
				5 V	17.4	

6.11 Typical Characteristics

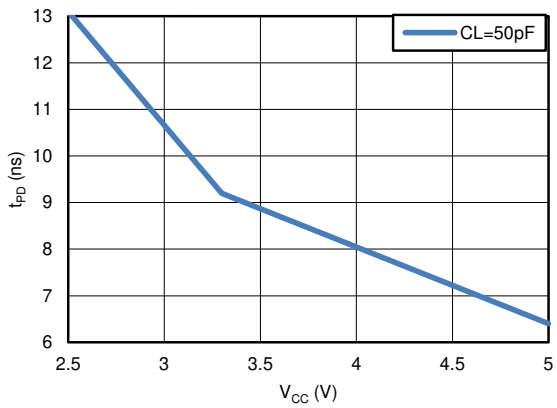

Figure 6-1. TPD vs V_{CC}

Copyright © 2023 Texas Instruments Incorporated

7 Parameter Measurement Information

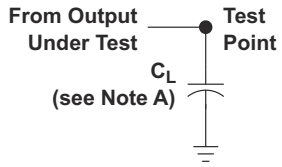

LOAD CIRCUIT FOR
TOTEM-POLE OUTPUTS

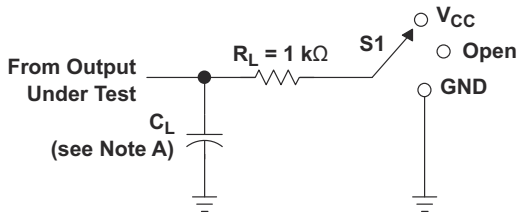

LOAD CIRCUIT FOR
3-STATE AND OPEN-DRAIN OUTPUTS

TEST	S1
t_{PLH}/t_{PHL}	Open
t_{PLZ}/t_{PZL}	V_{CC}
t_{PHZ}/t_{PZH}	GND
Open Drain	V_{CC}

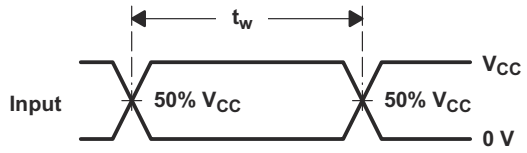

VOLTAGE WAVEFORMS
PULSE DURATION

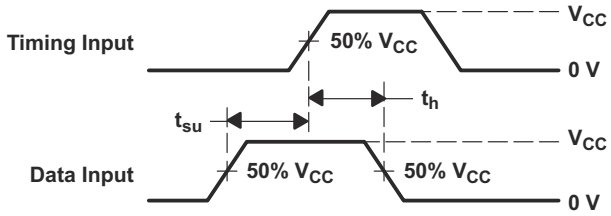

VOLTAGE WAVEFORMS
SETUP AND HOLD TIMES

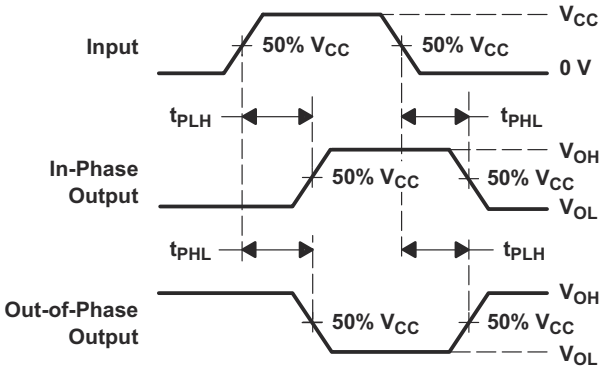

VOLTAGE WAVEFORMS
PROPAGATION DELAY TIMES
INVERTING AND NONINVERTING OUTPUTS

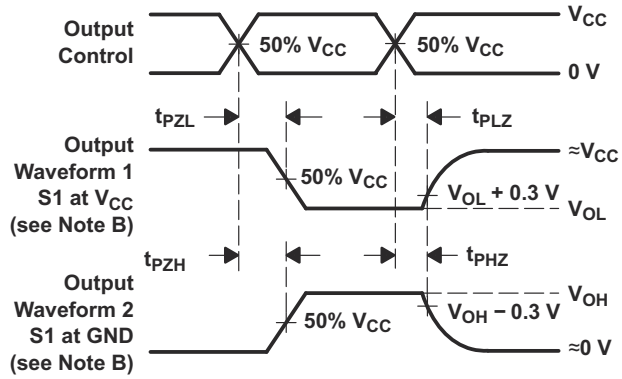

VOLTAGE WAVEFORMS
ENABLE AND DISABLE TIMES
LOW- AND HIGH-LEVEL ENABLING

A. C_L includes probe and jig capacitance.
B. Waveform 1 is for an output with internal conditions such that the output is low, except when disabled by the output control. Waveform 2 is for an output with internal conditions such that the output is high, except when disabled by the output control.
C. All input pulses are supplied by generators having the following characteristics: PRR ≤ 1 MHz, Z_O = 50 Ω, t_r ≤ 3 ns, t_f ≤ 3 ns.
D. The outputs are measured one at a time, with one input transition per measurement.
E. t_{PLZ} and t_{PHZ} are the same as t_{dis}.
F. t_{PZL} and t_{PZH} are the same as t_{en}.
G. t_{PHL} and t_{PLH} are the same as t_{pd}.
H. All parameters and waveforms are not applicable to all devices.

Figure 7-1. Load Circuit and Voltage Waveforms

Copyright © 2023 Texas Instruments Incorporated

8 Detailed Description

8.1 Overview

The ’LV367A devices are hex buffers and line drivers designed for 2 V to 5.5 V V_{CC} operation. These devices are designed specifically to improve both the performance and density of 3-state memory address drivers, clock drivers, and bus-oriented receivers and transmitters.

The ’LV367A devices are organized as dual 4-line and 2-line buffers/drivers with active-low output-enable (1$\overline{OE}$ and 2$\overline{OE}$) inputs. When $\overline{OE}$ is low, the device passes noninverted data from the A inputs to the Y outputs. When $\overline{OE}$ is high, the outputs are in the high-impedance state.

To ensure the high-impedance state during power up or power down, OE should be tied to V_{CC} through a pullup resistor; the minimum value of the resistor is determined by the current-sinking capability of the driver.

8.2 Functional Block Diagram

Figure 8-1. Logic Diagram (Positive Logic)

Copyright © 2023 Texas Instruments Incorporated

8.3 Feature Description

8.3.1 Balanced CMOS 3-State Outputs

This device includes balanced CMOS 3-state outputs. Driving high, driving low, and high impedance are the three states that these outputs can be in. The term *balanced* indicates that the device can sink and source similar currents. The drive capability of this device may create fast edges into light loads, so routing and load conditions should be considered to prevent ringing. Additionally, the outputs of this device can drive larger currents than the device can sustain without being damaged. It is important for the output power of the device to be limited to avoid damage due to overcurrent. The electrical and thermal limits defined in the *Absolute Maximum Ratings* must be followed at all times.

When placed into the high-impedance mode, the output will neither source nor sink current, with the exception of minor leakage current as defined in the *Electrical Characteristics* table. In the high-impedance state, the output voltage is not controlled by the device and is dependent on external factors. If no other drivers are connected to the node, then this is known as a floating node and the voltage is unknown. A pull-up or pull-down resistor can be connected to the output to provide a known voltage at the output while it is in the high-impedance state. The value of the resistor will depend on multiple factors, including parasitic capacitance and power consumption limitations. Typically, a 10-kΩ resistor can be used to meet these requirements.

Unused 3-state CMOS outputs should be left disconnected.

8.3.2 Balanced CMOS Push-Pull Outputs

This device includes balanced CMOS push-pull outputs. The term *balanced* indicates that the device can sink and source similar currents. The drive capability of this device may create fast edges into light loads, so routing and load conditions should be considered to prevent ringing. Additionally, the outputs of this device are capable of driving larger currents than the device can sustain without being damaged. It is important for the output power of the device to be limited to avoid damage due to overcurrent. The electrical and thermal limits defined in the *Absolute Maximum Ratings* must be followed at all times.

Unused push-pull CMOS outputs should be left disconnected.

8.3.3 Latching Logic

This device includes latching logic circuitry. Latching circuits commonly include D-type latches and D-type flip-flops, but include all logic circuits that act as volatile memory.

When the device is powered on, the state of each latch is unknown. There is no default state for each latch at start-up.

The output state of each latching logic circuit only remains stable as long as power is applied to the device within the supply voltage range specified in the *Recommended Operating Conditions* table.

8.3.4 Partial Power Down (I_{off})

This device includes circuitry to disable all outputs when the supply pin is held at 0 V. When disabled, the outputs will neither source nor sink current, regardless of the input voltages applied. The amount of leakage current at each output is defined by the I_{off} specification in the *Electrical Characteristics* table.

8.3.5 Clamp Diode Structure

Figure 8-2 shows the inputs and outputs to this device have negative clamping diodes only.

CAUTION

Voltages beyond the values specified in the *Absolute Maximum Ratings* table can cause damage to the device. The input and output voltage ratings may be exceeded if the input and output clamp-current ratings are observed.

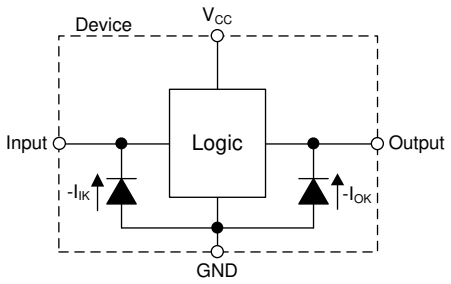

Figure 8-2. Electrical Placement of Clamping Diodes for Each Input and Output

8.4 Device Functional Modes

Table 8-1. Function Table (Each Buffer/ Driver)

INPUTS		OUTPUT
$\overline{OE}$	A	Y
L	H	H
L	L	L
H	X	Z

Copyright © 2023 Texas Instruments Incorporated

9 Application and Implementation

Note

Information in the following applications sections is not part of the TI component specification, and TI does not warrant its accuracy or completeness. TI's customers are responsible for determining suitability of components for their purposes, as well as validating and testing their design implementation to confirm system functionality.

9.1 Application Information

The SN74LV367A is a low-drive CMOS device that can be used for a multitude of bus interface type applications where output ringing is a concern. The low drive and slow edge rates will minimize overshoot and undershoot on the outputs. The inputs are 5 V tolerant allowing for down translation to V_{CC}.

9.2 Typical Application

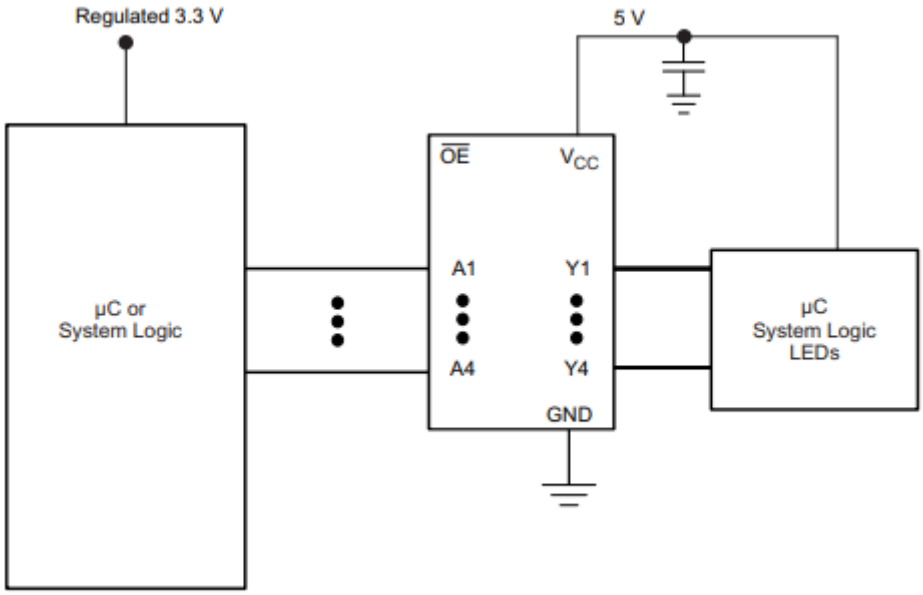

Figure 9-1. Expanding IOs to Drive LEDs

9.3 Power Supply Recommendations

The power supply can be any voltage between the MIN and MAX supply voltage rating located in the Recommended Operating Conditions table.

Each V_{CC} terminal should have a good bypass capacitor to prevent power disturbance. For devices with a single supply, a 0.1 µF capacitor is recommended. If there are multiple V_{CC} terminals then 0.01 µF or 0.022 µF capacitors are recommended for each power terminal. It is ok to parallel multiple bypass capacitors to reject different frequencies of noise. 0.1 µF and 1.0 µF capacitors are commonly used in parallel. The bypass capacitor should be installed as close to the power terminal as possible for the best results.

9.4 Layout

9.4.1 Layout Guidelines

When using multiple bit logic devices, inputs should not float. In many cases, functions or parts of functions of digital logic devices are unused. Some examples are when only two inputs of a triple-input AND gate are used, or when only 3 of the 4-buffer gates are used. Such unused input pins must not be left unconnected because the undefined voltages at the outside connections result in undefined operational states. All unused inputs of digital logic devices must be connected to a logic high or logic low voltage, as defined by the input voltage specifications, to prevent them from floating. The logic level that must be applied to any particular unused input

Copyright © 2023 Texas Instruments Incorporated

depends on the function of the device. Generally, the inputs are tied to GND or VCC, whichever makes more sense for the logic function or is more convenient.

9.4.2 Layout Example

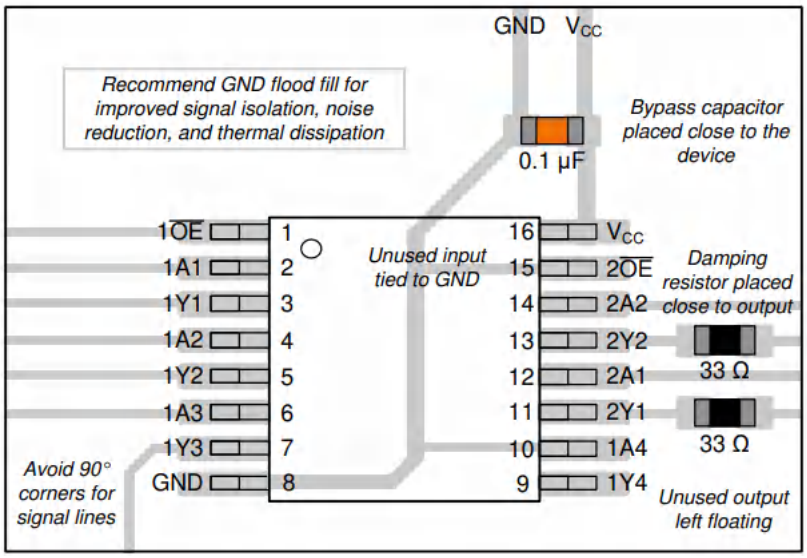

Figure 9-2. Layout Example for the SN74LV367A

Copyright © 2023 Texas Instruments Incorporated

10 Device and Documentation Support

10.1 Documentation Support

10.1.1 Related Documentation

For related documentation, see the following:

- Texas Instruments, *CMOS Power Consumption and Cpd Calculation* application report
- Texas Instruments, *Thermal Characteristics of Standard Linear and Logic (SLL) Packages and Devices* application report

10.2 Receiving Notification of Documentation Updates

To receive notification of documentation updates, navigate to the device product folder on ti.com. Click on *Subscribe to updates* to register and receive a weekly digest of any product information that has changed. For change details, review the revision history included in any revised document.

10.3 Support Resources

TI E2E™ support forums are an engineer's go-to source for fast, verified answers and design help — straight from the experts. Search existing answers or ask your own question to get the quick design help you need.

Linked content is provided "AS IS" by the respective contributors. They do not constitute TI specifications and do not necessarily reflect TI's views; see TI's Terms of Use.

10.4 Trademarks

TI E2E™ is a trademark of Texas Instruments.
All trademarks are the property of their respective owners.

10.5 Electrostatic Discharge Caution

This integrated circuit can be damaged by ESD. Texas Instruments recommends that all integrated circuits be handled with appropriate precautions. Failure to observe proper handling and installation procedures can cause damage.

ESD damage can range from subtle performance degradation to complete device failure. Precision integrated circuits may be more susceptible to damage because very small parametric changes could cause the device not to meet its published specifications.

10.6 Glossary

TI Glossary	This glossary lists and explains terms, acronyms, and definitions.

11 Mechanical, Packaging, and Orderable Information

The following pages include mechanical, packaging, and orderable information. This information is the most current data available for the designated devices. This data is subject to change without notice and revision of this document. For browser-based versions of this data sheet, refer to the left-hand navigation.

Copyright © 2023 Texas Instruments Incorporated

PACKAGING INFORMATION

Orderable part number	Status (1)	Material type (2)	Package | Pins	Package qty | Carrier	RoHS (3)	Lead finish/ Ball material (4)	MSL rating/ Peak reflow (5)	Op temp (°C)	Part marking (6)
SN74LV367AD	Obsolete	Production	SOIC (D) | 16	-	-	Call TI	Call TI	-40 to 85	LV367A
SN74LV367ADGVR	Active	Production	TVSOP (DGV) | 16	2000 | LARGE T&R	Yes	NIPDAU	Level-1-260C-UNLIM	-40 to 85	LV367A
SN74LV367ADGVR.A	Active	Production	TVSOP (DGV) | 16	2000 | LARGE T&R	Yes	NIPDAU	Level-1-260C-UNLIM	-40 to 85	LV367A
SN74LV367ADR	Active	Production	SOIC (D) | 16	2500 | LARGE T&R	Yes	NIPDAU	Level-1-260C-UNLIM	-40 to 85	LV367A
SN74LV367ADR.A	Active	Production	SOIC (D) | 16	2500 | LARGE T&R	Yes	NIPDAU	Level-1-260C-UNLIM	-40 to 85	LV367A
SN74LV367ANSR	Active	Production	SOP (NS) | 16	2000 | LARGE T&R	Yes	NIPDAU	Level-1-260C-UNLIM	-40 to 85	74LV367A
SN74LV367ANSR.A	Active	Production	SOP (NS) | 16	2000 | LARGE T&R	Yes	NIPDAU	Level-1-260C-UNLIM	-40 to 85	74LV367A
SN74LV367APWR	Active	Production	TSSOP (PW) | 16	2000 | LARGE T&R	Yes	NIPDAU | SN	Level-1-260C-UNLIM	-40 to 85	(LV367A, T9044PW)
SN74LV367APWR.A	Active	Production	TSSOP (PW) | 16	2000 | LARGE T&R	Yes	NIPDAU	Level-1-260C-UNLIM	-40 to 85	(LV367A, T9044PW)
SN74LV367APWT	Obsolete	Production	TSSOP (PW) | 16	-	-	Call TI	Call TI	-40 to 85	LV367A

(1) **Status:** For more details on status, see our product life cycle.

(2) **Material type:** When designated, preproduction parts are prototypes/experimental devices, and are not yet approved or released for full production. Testing and final process, including without limitation quality assurance, reliability performance testing, and/or process qualification, may not yet be complete, and this item is subject to further changes or possible discontinuation. If available for ordering, purchases will be subject to an additional waiver at checkout, and are intended for early internal evaluation purposes only. These items are sold without warranties of any kind.

(3) **RoHS values:** Yes, No, RoHS Exempt. See the TI RoHS Statement for additional information and value definition.

(4) **Lead finish/Ball material:** Parts may have multiple material finish options. Finish options are separated by a vertical ruled line. Lead finish/Ball material values may wrap to two lines if the finish value exceeds the maximum column width.

(5) **MSL rating/Peak reflow:** The moisture sensitivity level ratings and peak solder (reflow) temperatures. In the event that a part has multiple moisture sensitivity ratings, only the lowest level per JEDEC standards is shown. Refer to the shipping label for the actual reflow temperature that will be used to mount the part to the printed circuit board.

(6) **Part marking:** There may be an additional marking, which relates to the logo, the lot trace code information, or the environmental category of the part.

Multiple part markings will be inside parentheses. Only one part marking contained in parentheses and separated by a "~" will appear on a part. If a line is indented then it is a continuation of the previous line and the two combined represent the entire part marking for that device.

Important Information and Disclaimer: The information provided on this page represents TI's knowledge and belief as of the date that it is provided. TI bases its knowledge and belief on information provided by third parties, and makes no representation or warranty as to the accuracy of such information. Efforts are underway to better integrate information from third parties. TI has taken and continues to take reasonable steps to provide representative

and accurate information but may not have conducted destructive testing or chemical analysis on incoming materials and chemicals. TI and TI suppliers consider certain information to be proprietary, and thus CAS numbers and other limited information may not be available for release.

In no event shall TI's liability arising out of such information exceed the total purchase price of the TI part(s) at issue in this document sold by TI to Customer on an annual basis.

TAPE AND REEL INFORMATION

REEL DIMENSIONS

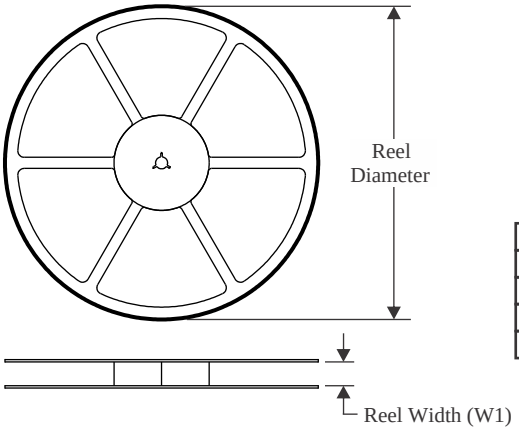

TAPE DIMENSIONS

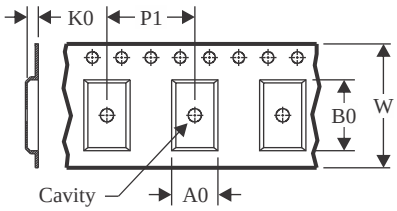

A0	Dimension designed to accommodate the component width
B0	Dimension designed to accommodate the component length
K0	Dimension designed to accommodate the component thickness
W	Overall width of the carrier tape
P1	Pitch between successive cavity centers

QUADRANT ASSIGNMENTS FOR PIN 1 ORIENTATION IN TAPE

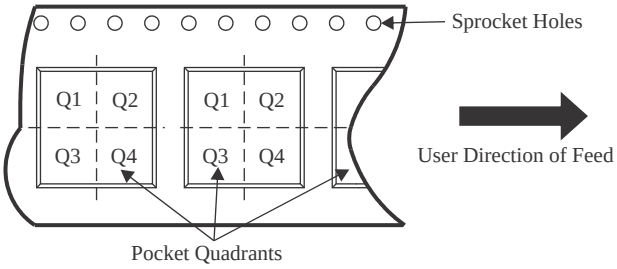

*All dimensions are nominal

Device	Package Type	Package Drawing	Pins	SPQ	Reel Diameter (mm)	Reel Width W1 (mm)	A0 (mm)	B0 (mm)	K0 (mm)	P1 (mm)	W (mm)	Pin1 Quadrant
SN74LV367ADGVR	TVSOP	DGV	16	2000	330.0	12.4	6.8	4.0	1.6	8.0	12.0	Q1
SN74LV367ADR	SOIC	D	16	2500	330.0	16.4	6.5	10.3	2.1	8.0	16.0	Q1
SN74LV367ANSR	SOP	NS	16	2000	330.0	16.4	8.2	10.5	2.5	12.0	16.0	Q1
SN74LV367APWR	TSSOP	PW	16	2000	330.0	12.4	6.9	5.6	1.6	8.0	12.0	Q1
SN74LV367APWR	TSSOP	PW	16	2000	330.0	12.4	6.9	5.6	1.6	8.0	12.0	Q1

TAPE AND REEL BOX DIMENSIONS

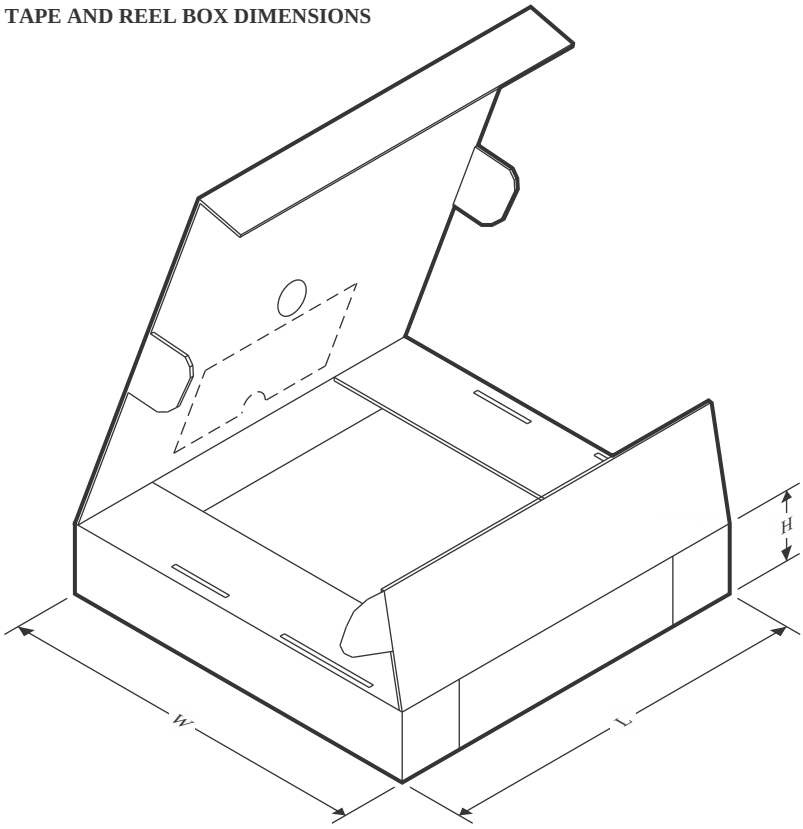

*All dimensions are nominal

Device	Package Type	Package Drawing	Pins	SPQ	Length (mm)	Width (mm)	Height (mm)
SN74LV367ADGVR	TVSOP	DGV	16	2000	356.0	356.0	35.0
SN74LV367ADR	SOIC	D	16	2500	356.0	356.0	35.0
SN74LV367ANSR	SOP	NS	16	2000	356.0	356.0	35.0
SN74LV367APWR	TSSOP	PW	16	2000	353.0	353.0	32.0
SN74LV367APWR	TSSOP	PW	16	2000	356.0	356.0	35.0

DGV (R-PDSO-G)** **PLASTIC SMALL-OUTLINE**

24 PINS SHOWN

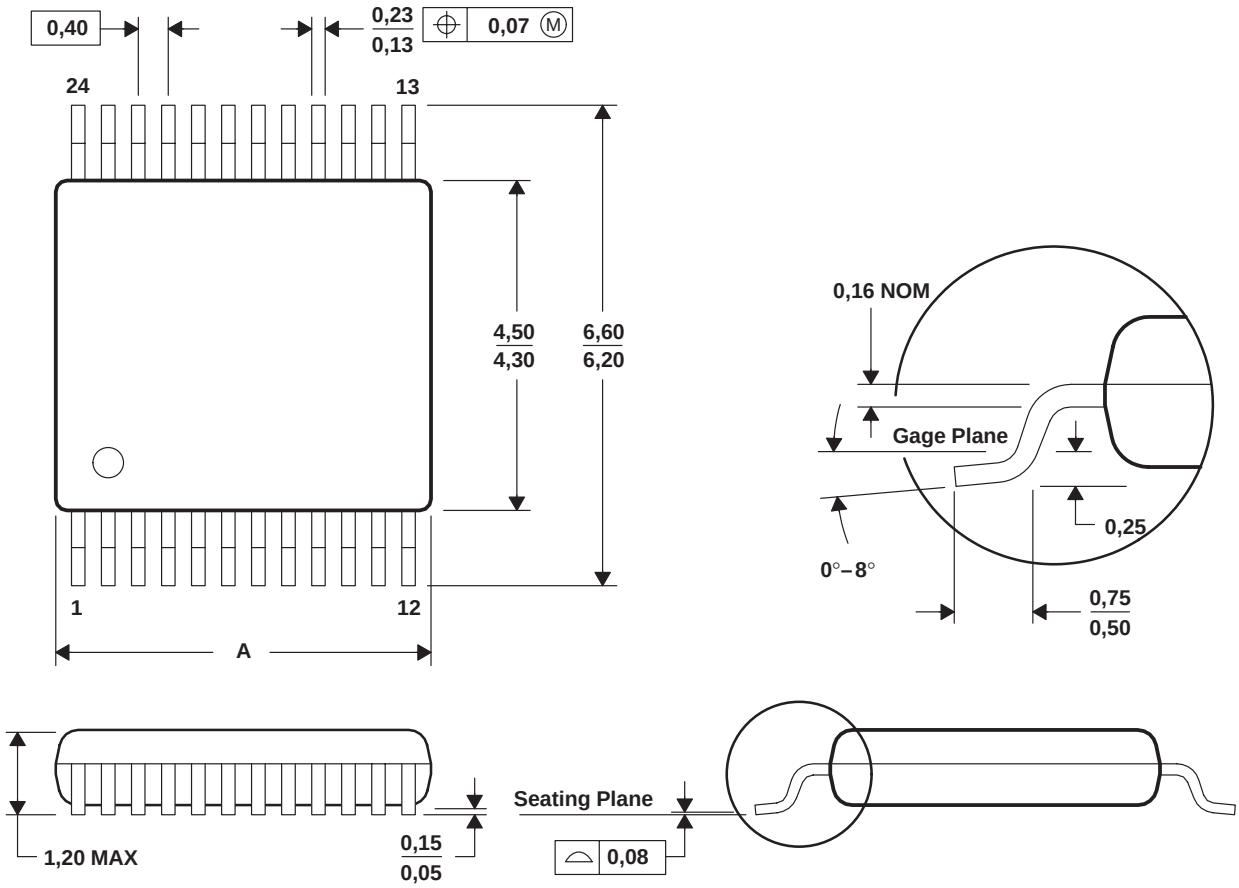

DIM \ PINS **	14	16	20	24	38	48	56
A MAX	3,70	3,70	5,10	5,10	7,90	9,80	11,40
A MIN	3,50	3,50	4,90	4,90	7,70	9,60	11,20

4073251/E 08/00

NOTES: A. All linear dimensions are in millimeters.
B. This drawing is subject to change without notice.
C. Body dimensions do not include mold flash or protrusion, not to exceed 0,15 per side.
D. Falls within JEDEC: 24/48 Pins – MO-153
14/16/20/56 Pins – MO-194

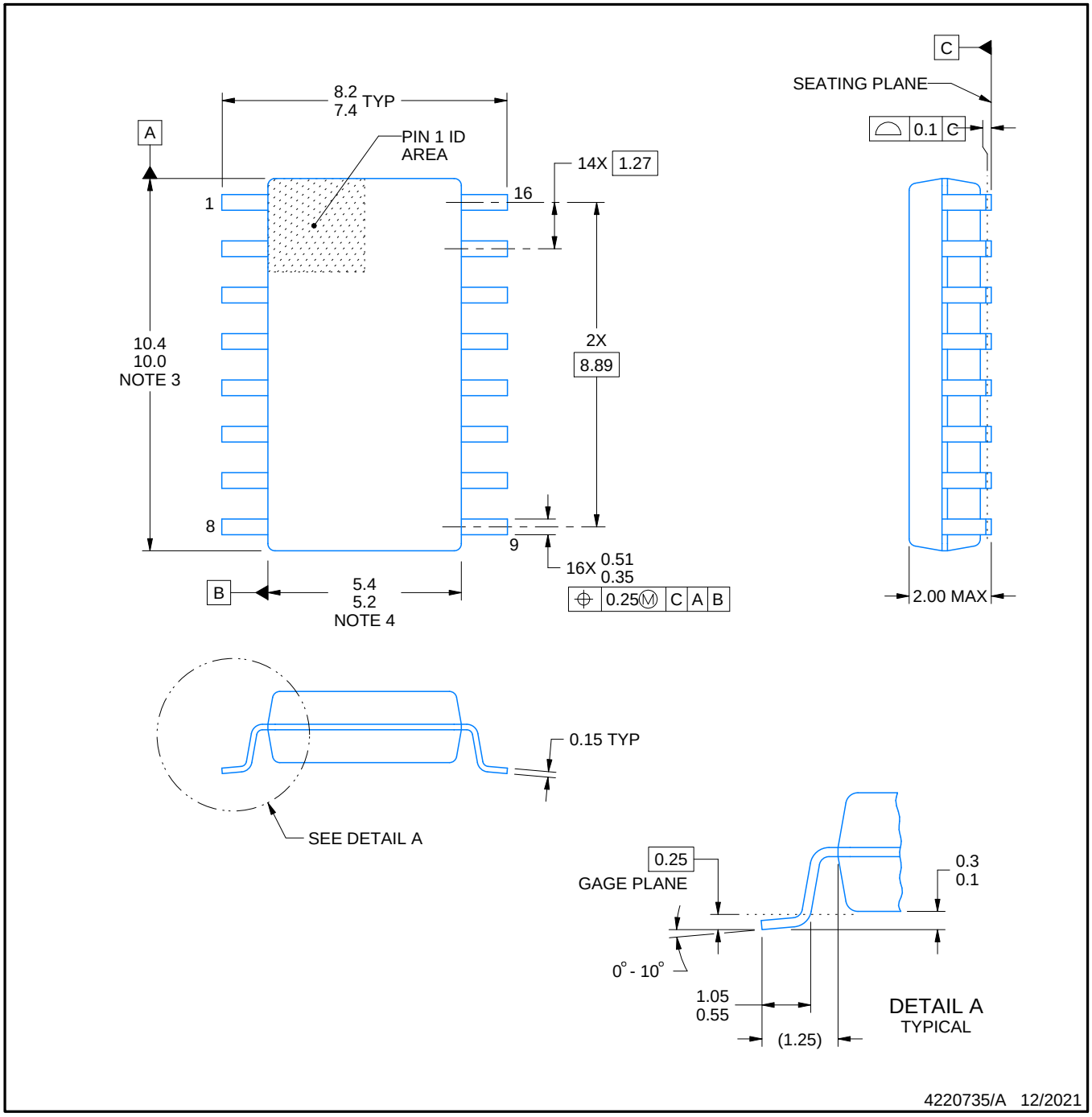

NOTES:

1. All linear dimensions are in millimeters. Dimensions in parenthesis are for reference only. Dimensioning and tolerancing per ASME Y14.5M.
2. This drawing is subject to change without notice.
3. This dimension does not include mold flash, protrusions, or gate burrs. Mold flash, protrusions, or gate burrs shall not exceed 0.15 mm, per side.
4. This dimension does not include interlead flash. Interlead flash shall not exceed 0.25 mm, per side.

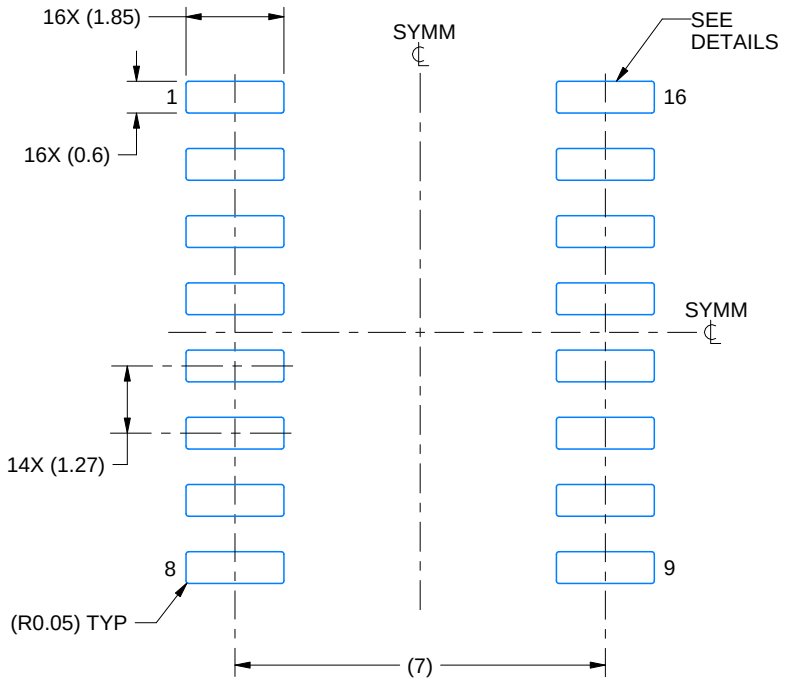

LAND PATTERN EXAMPLE
SCALE:7X

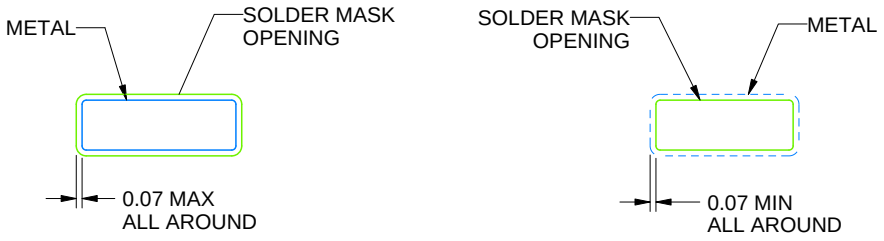

NON SOLDER MASK DEFINED

SOLDER MASK DEFINED

SOLDER MASK DETAILS

4220735/A 12/2021

NOTES: (continued)

5. Publication IPC-7351 may have alternate designs.
6. Solder mask tolerances between and around signal pads can vary based on board fabrication site.

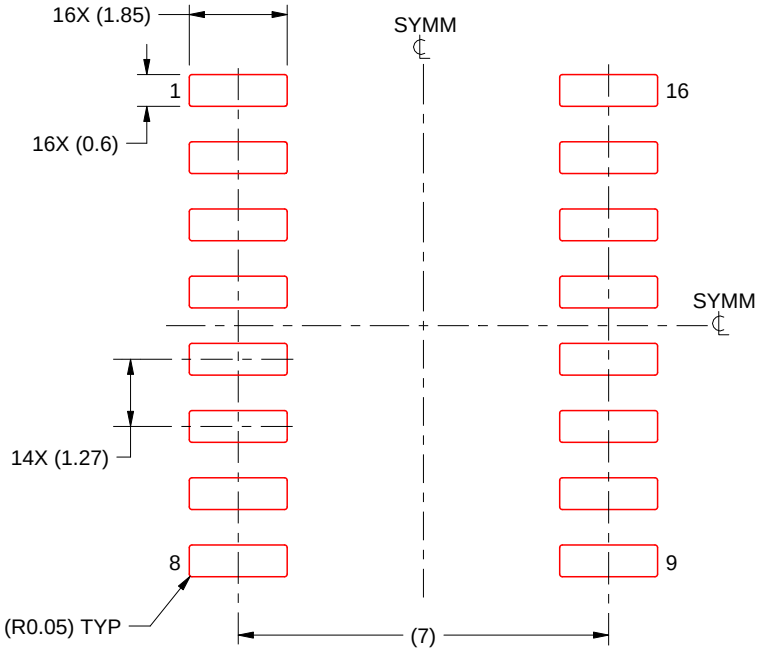

SOLDER PASTE EXAMPLE
BASED ON 0.125 mm THICK STENCIL
SCALE:7X

4220735/A 12/2021

NOTES: (continued)

7. Laser cutting apertures with trapezoidal walls and rounded corners may offer better paste release. IPC-7525 may have alternate design recommendations.
8. Board assembly site may have different recommendations for stencil design.

D (R–PDSO–G16) PLASTIC SMALL OUTLINE

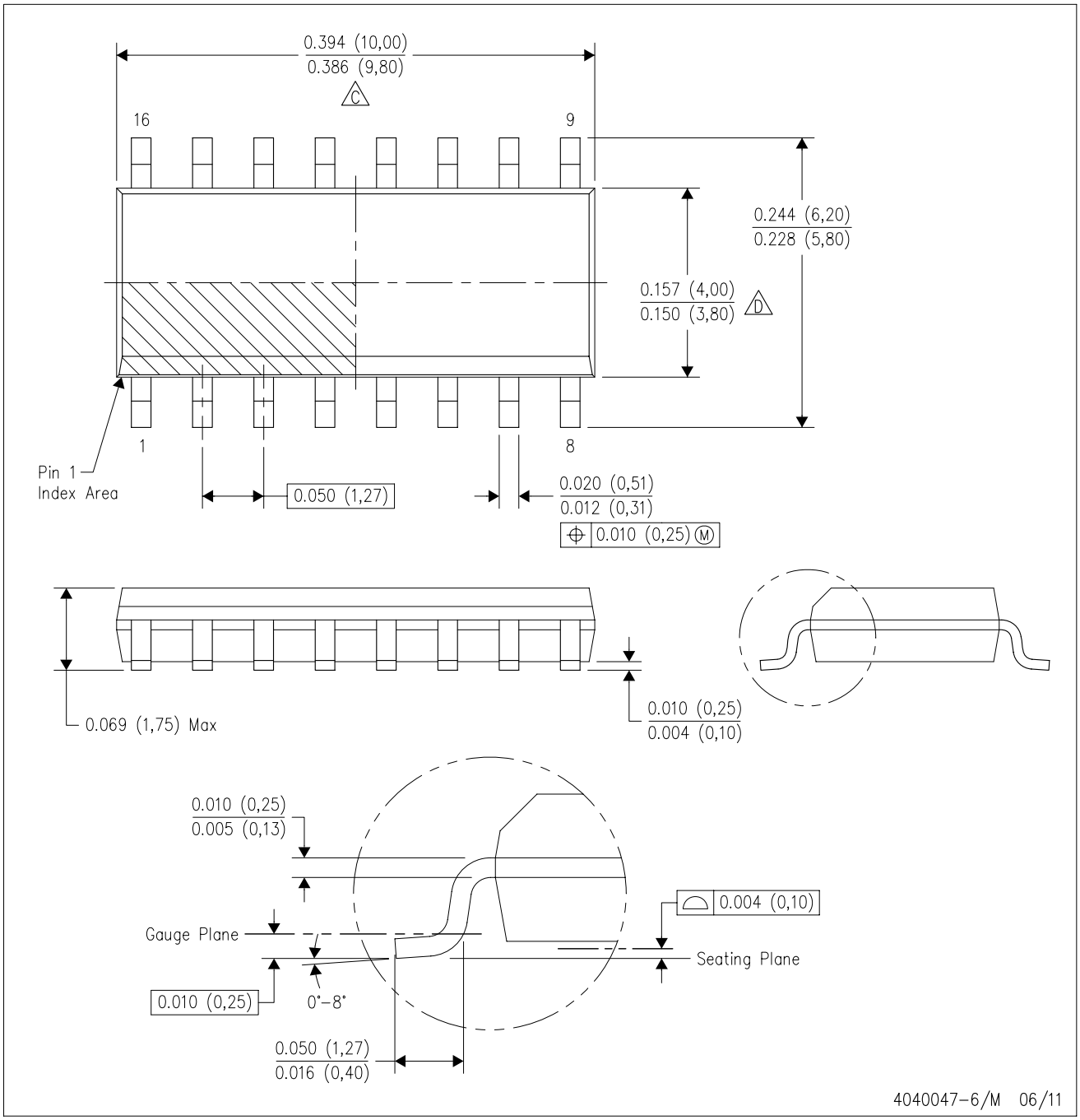

NOTES:
A. All linear dimensions are in inches (millimeters).
B. This drawing is subject to change without notice.
C. Body length does not include mold flash, protrusions, or gate burrs. Mold flash, protrusions, or gate burrs shall not exceed 0.006 (0,15) each side.
D. Body width does not include interlead flash. Interlead flash shall not exceed 0.017 (0,43) each side.
E. Reference JEDEC MS–012 variation AC.

PW0016A

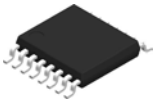

PACKAGE OUTLINE

TSSOP - 1.2 mm max height

SMALL OUTLINE PACKAGE

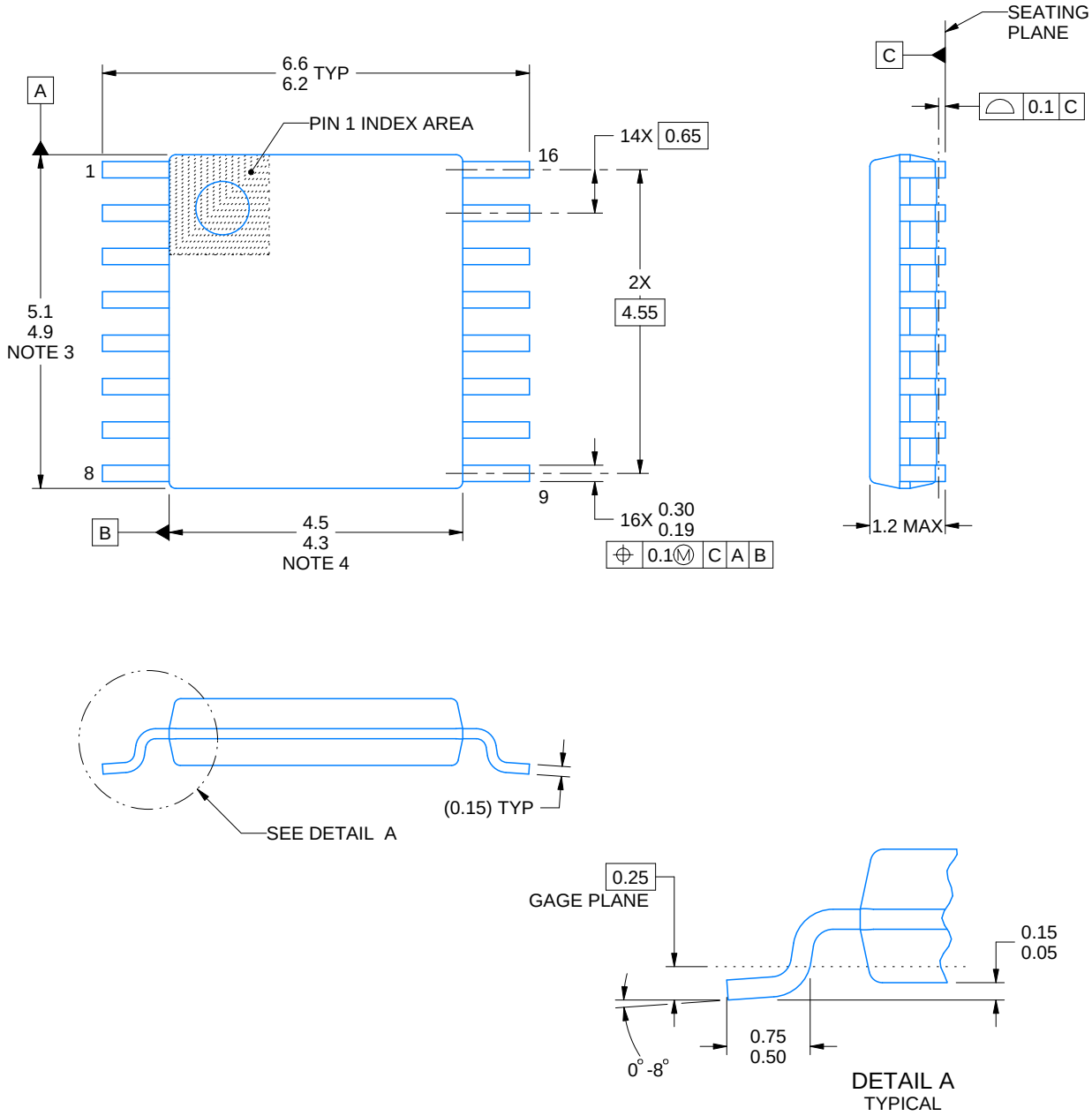

NOTES:

1. All linear dimensions are in millimeters. Any dimensions in parenthesis are for reference only. Dimensioning and tolerancing per ASME Y14.5M.
2. This drawing is subject to change without notice.
3. This dimension does not include mold flash, protrusions, or gate burrs. Mold flash, protrusions, or gate burrs shall not exceed 0.15 mm per side.
4. This dimension does not include interlead flash. Interlead flash shall not exceed 0.25 mm per side.
5. Reference JEDEC registration MO-153.

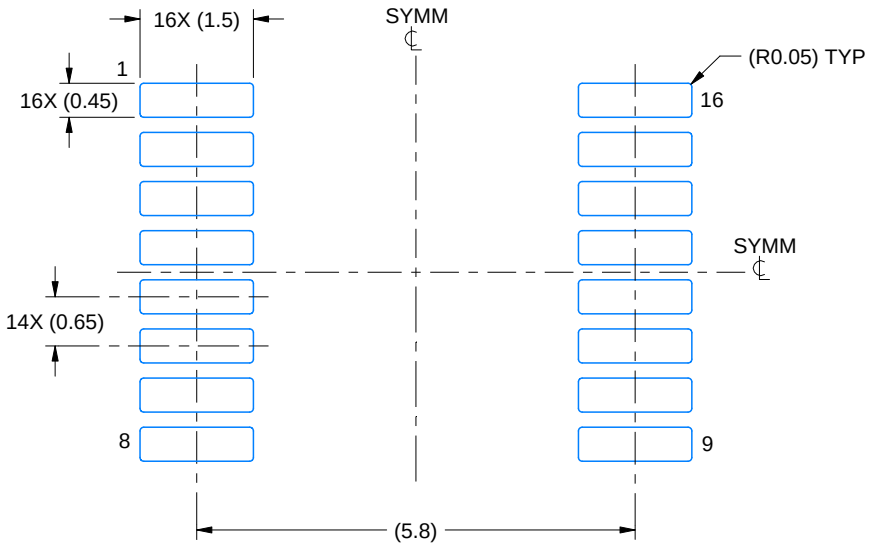

LAND PATTERN EXAMPLE
EXPOSED METAL SHOWN
SCALE: 10X

NON-SOLDER MASK DEFINED (PREFERRED)

SOLDER MASK DEFINED

SOLDER MASK DETAILS

4220204/A 02/2017

NOTES: (continued)

6. Publication IPC-7351 may have alternate designs.
7. Solder mask tolerances between and around signal pads can vary based on board fabrication site.

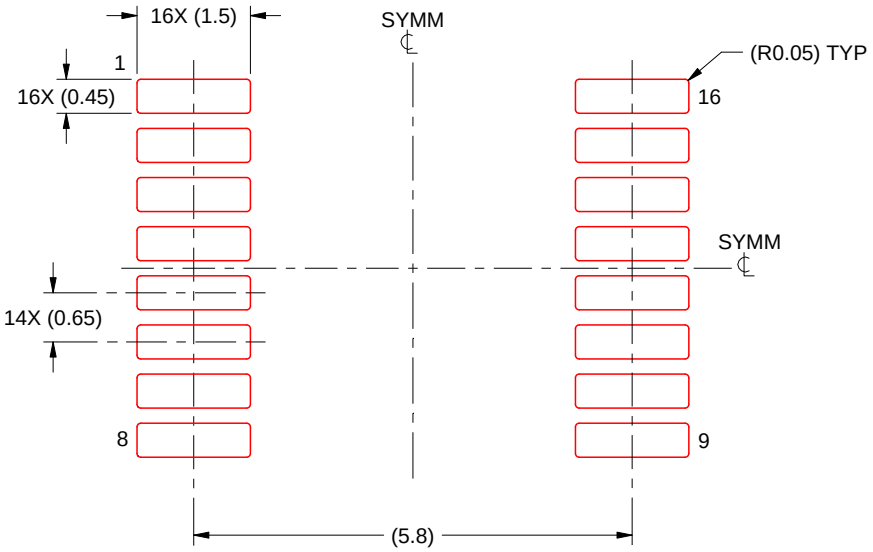

SOLDER PASTE EXAMPLE
BASED ON 0.125 mm THICK STENCIL
SCALE: 10X

4220204/A 02/2017

NOTES: (continued)

8. Laser cutting apertures with trapezoidal walls and rounded corners may offer better paste release. IPC-7525 may have alternate design recommendations.
9. Board assembly site may have different recommendations for stencil design.

MECHANICAL DATA

NS (R-PDSO-G)** **PLASTIC SMALL-OUTLINE PACKAGE**

14-PINS SHOWN

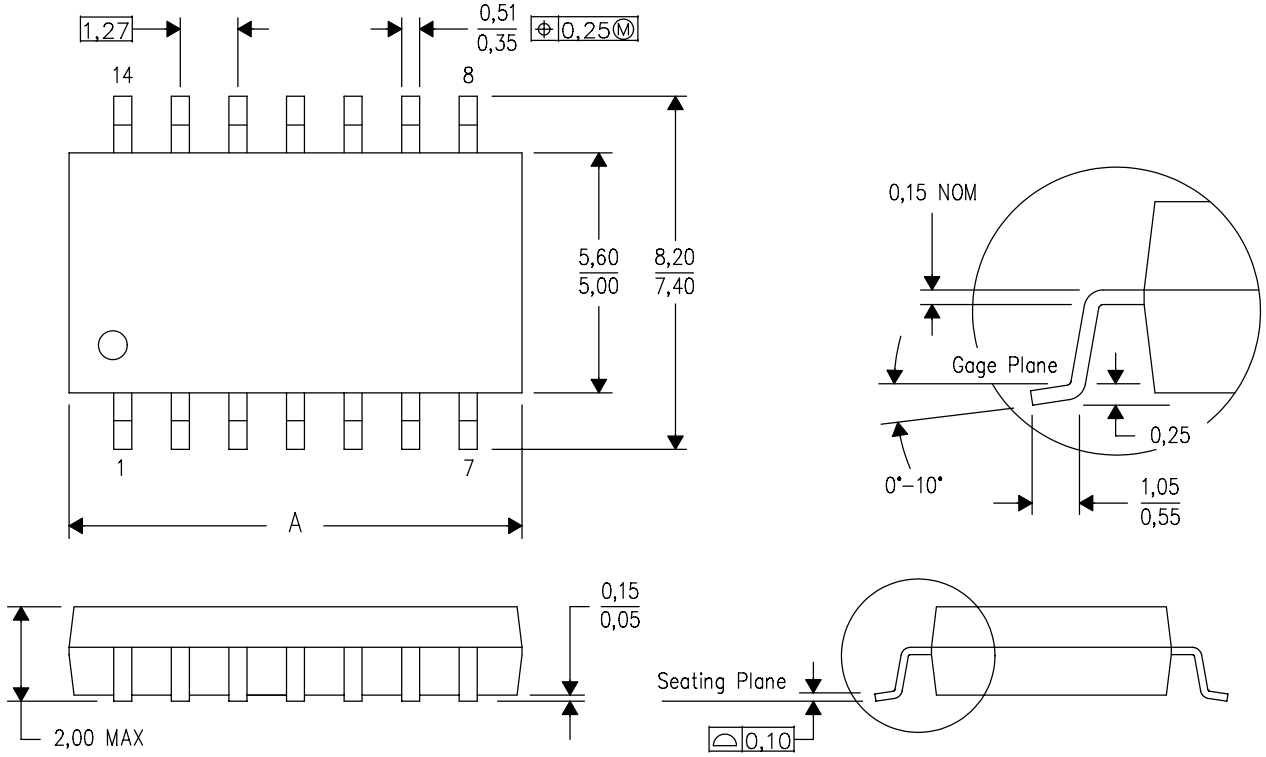

DIM \ PINS **	14	16	20	24
A MAX	10,50	10,50	12,90	15,30
A MIN	9,90	9,90	12,30	14,70

4040062/C 03/03

NOTES:
A. All linear dimensions are in millimeters.
B. This drawing is subject to change without notice.
C. Body dimensions do not include mold flash or protrusion, not to exceed 0,15.

IMPORTANT NOTICE AND DISCLAIMER

TI PROVIDES TECHNICAL AND RELIABILITY DATA (INCLUDING DATA SHEETS), DESIGN RESOURCES (INCLUDING REFERENCE DESIGNS), APPLICATION OR OTHER DESIGN ADVICE, WEB TOOLS, SAFETY INFORMATION, AND OTHER RESOURCES “AS IS” AND WITH ALL FAULTS, AND DISCLAIMS ALL WARRANTIES, EXPRESS AND IMPLIED, INCLUDING WITHOUT LIMITATION ANY IMPLIED WARRANTIES OF MERCHANTABILITY, FITNESS FOR A PARTICULAR PURPOSE OR NON-INFRINGEMENT OF THIRD PARTY INTELLECTUAL PROPERTY RIGHTS.

These resources are intended for skilled developers designing with TI products. You are solely responsible for (1) selecting the appropriate TI products for your application, (2) designing, validating and testing your application, and (3) ensuring your application meets applicable standards, and any other safety, security, regulatory or other requirements.

These resources are subject to change without notice. TI grants you permission to use these resources only for development of an application that uses the TI products described in the resource. Other reproduction and display of these resources is prohibited. No license is granted to any other TI intellectual property right or to any third party intellectual property right. TI disclaims responsibility for, and you will fully indemnify TI and its representatives against, any claims, damages, costs, losses, and liabilities arising out of your use of these resources.

TI’s products are provided subject to TI’s Terms of Sale or other applicable terms available either on ti.com or provided in conjunction with such TI products. TI’s provision of these resources does not expand or otherwise alter TI’s applicable warranties or warranty disclaimers for TI products.

TI objects to and rejects any additional or different terms you may have proposed.

Mailing Address: Texas Instruments, Post Office Box 655303, Dallas, Texas 75265
Copyright © 2025, Texas Instruments Incorporated