TEXAS INSTRUMENTS
Data sheet acquired from Harris Semiconductor
SCHS099B – Revised January 2003

CD40109B Types

CMOS Quad Low-to-High Voltage Level Shifter

High-Voltage Types (20-Volt Rating)

■ CD40109B contains four low-to-high-voltage level-shifting circuits. Each circuit will shift a low-voltage digital-logic input signal (A, B, C, D) with logical 1 = V_{CC} and logical 0 = V_{SS} to a higher-voltage output signal (E, F, G, H) with logical 1 = V_{DD} and logical 0 = V_{SS}.

The CD40109, unlike other low-to-high level-shifting circuits, does not require the presence of the high-voltage supply (V_{DD}) before the application of either the low-voltage supply (V_{CC}) or the input signals. There are no restrictions on the sequence of application of V_{DD}, V_{CC}, or the input signals. In addition, with one exception there are no restrictions on the relative magnitudes of the supply voltages or input signals within the device maximum ratings, provided that the input signal swings between V_{SS} and at least 0.7 V_{CC}; V_{CC} may exceed V_{DD}, and input signals may exceed V_{CC} and V_{DD}. When operated in the mode $V_{CC} > V_{DD}$, the CD40109 will operate as a high-to-low level-shifter.

The CD40109 also features individual three-state output capability. A low level on any of the separately enabled three-state output controls produces a high-impedance state in the corresponding output.

The CD40109B-Series types are supplied in 16-lead ceramic dual-in-line packages (F3A suffix), 16-lead dual-in-line plastic packages (E suffix), 16-lead small-outline packages (NSR suffix), and 16-lead thin shrink small-outline packages (PW and PWR suffixes).

Applications:

- High-or-low level-shifting with three-state outputs for unidirectional or bidirectional bussing
- Isolation of logic subsystems using separate power supplies from supply sequencing, supply loss and supply regulation considerations

Features:

- Independence of power supply sequence considerations—V_{CC} can exceed V_{DD}, input signals can exceed both V_{CC} and V_{DD}
- Up and down level-shifting capability
- Three-state outputs with separate enable controls
- Standardized, symmetrical output characteristics
- 100% tested for quiescent current at 20 V
- Maximum input current of 1 μA at 18 V over full package-temperature range; 100 nA at 18 V and 25°C
- Noise margin (full package-temperature range)
  - = 1 V at V_{CC} = 5 V, V_{DD} = 10 V
  - = 2 V at V_{CC} = 10 V, V_{DD} = 15 V
- 5-V, 10-V, and 15-V parametric ratings
- Meets all requirements of JEDEC Tentative Standard No. 13B, "Standard Specifications for Description of 'B' Series CMOS Devices"

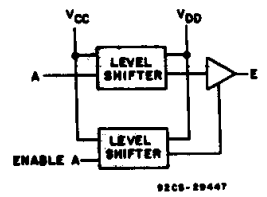

FUNCTIONAL DIAGRAM
(1 of 4 units)

RECOMMENDED OPERATING CONDITIONS

For maximum reliability, nominal operating conditions should be selected so that operation is always within the following ranges:

CHARACTERISTIC	LIMITS		UNITS
	MIN.	MAX.	
Supply-Voltage Range (For T_A = Full Package-Temperature Range)	3	18	V

MAXIMUM RATINGS, *Absolute-Maximum Values:*

DC SUPPLY-VOLTAGE RANGE, (V_{DD})
Voltages referenced to V_{SS} Terminal) ..... −0.5V to +20V
OUTPUT VOLTAGE RANGE, ALL OUTPUTS ..... −0.5 V to V_{DD} +0.5 V
DC INPUT CURRENT, ANY ONE INPUT ..... ±10mA
POWER DISSIPATION PER PACKAGE (P_D):
For T_A = −55°C to +100°C 500mW
For T_A = +100°C to +125°C ..... Derate Linearity at 12mW/°C to 200mW
DEVICE DISSIPATION PER OUTPUT TRANSISTOR
FOR T_A = FULL PACKAGE-TEMPERATURE RANGE (All Package Types)..... 100mW
OPERATING-TEMPERATURE RANGE (T_A) .....−55°C to +125°C
STORAGE TEMPERATURE RANGE (T_{stg}) .....−65°C to +150°C
LEAD TEMPERATURE (DURING SOLDERING):
At distance 1/16 ± 1/32 inch (1.59 ± 0.79mm) from case for 10s max ..... +265°C

TRUTH TABLE

INPUTS		OUTPUTS
A, B, C, D	ENABLE A, B, C, D	E, F, G, H
0	1	0
1	1	1
X	0	Z

LOGIC 0 = LOW(V_{SS}) X = DON'T CARE Z = HIGH IMPEDANCE
LOGIC 1 = V_{CC} at INPUTS and V_{DD} at OUTPUTS

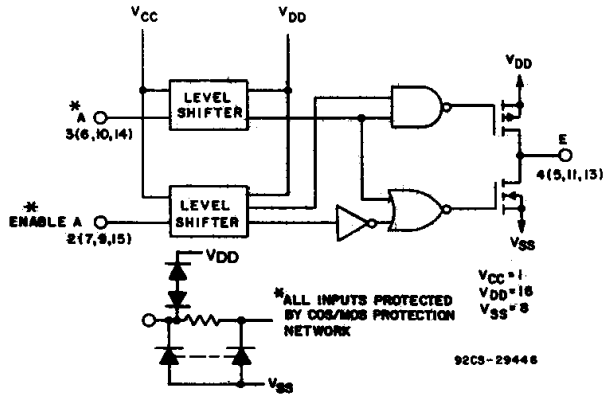

Fig. 1 – CD40109B logic diagram (1 of 4 units).

Copyright © 2003, Texas Instruments Incorporated

STATIC ELECTRICAL CHARACTERISTICS

CHARACTERISTIC	CONDITIONS			LIMITS AT INDICATED TEMPERATURES (°C)							UNITS
								+25			
	V_O (V)	V_{IN} (V)	V_{DD} (V)	−55	−40	+85	+125	Min.	Typ.	Max.	
Quiescent Device Current, I_{DD} Max.	–	0,5	5	1	1	30	30	–	0.02	1	μA
	–	0,10	10	2	2	60	60	–	0.02	2	
	–	0,15	15	4	4	120	120	–	0.02	4	
	–	0,20	20	20	20	600	600	–	0.04	20	
Output Low (Sink) Current I_{OL} Min.	0.4	0,5	5	0.64	0.61	0.42	0.36	0.51	1	–	mA
	0.5	0,10	10	1.6	1.5	1.1	0.9	1.3	2.6	–	
	1.5	0,15	15	4.2	4	2.8	2.4	3.4	6.8	–	
Output High (Source) Current, I_{OH} Min.	4.6	0,5	5	−0.64	−0.61	−0.42	−0.36	−0.51	−1	–	
	2.5	0,5	5	−2	−1.8	−1.3	−1.15	−1.6	−3.2	–	
	9.5	0,10	10	−1.6	−1.5	−1.1	−0.9	−1.3	−2.6	–	
	13.5	0,15	15	−4.2	−4	−2.8	−2.4	−3.4	−6.8	–	
Output Voltage: Low-Level, V_{OL} Max.	–	0,5	5	0.05				–	0	0.05	V
	–	0,10	10	0.05				–	0	0.05	
	–	0,15	15	0.05				–	0	0.05	
Output Voltage: High-Level, V_{OH} Min.	–	0,5	5	4.95				4.95	5	–	
	–	0,10	10	9.95				9.95	10	–	
	–	0,15	15	14.95				14.95	15	–	
Input Current I_{IN} Max.		0,18	18	±0.1	±0.1	±1	±1	–	$\pm10^{-5}$	±0.1	μA
3-State Output Leakage Current I_{OUT} Max.		0,18	18	±0.4	±0.4	±12	±12	–	$\pm10^{-4}$	±0.4	μA
	V_O (V)	V_{CC} (V)	V_{DD} (V)								
Input Low Voltage, V_{IL} Max.	1,9	5	10	1.5				—	—	1.5	V
	1.5, 13.5	10	15	3				—	—	3	
Input High Voltage, V_{IH} Min.	1,9	5	10	3.5				3.5	—	—	
	1.5,13.5	10	15	7				7	—	—	

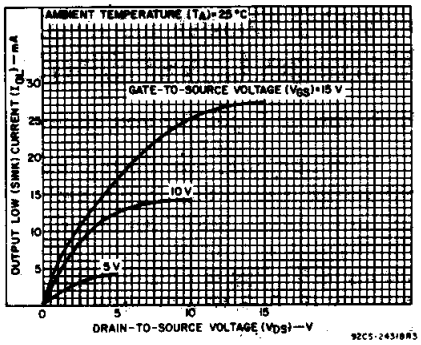

Fig.2 – Typical output low (sink) current characteristics.

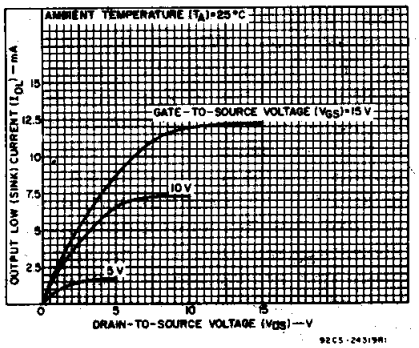

Fig.3 – Minimum output low (sink) current characteristics.

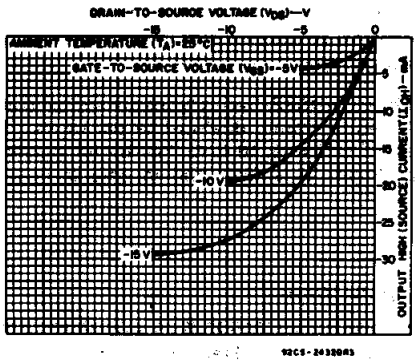

Fig.4 – Typical output high (source).

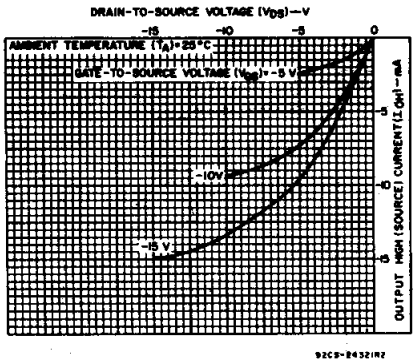

Fig.5 – Minimum output high (source) current characteristics.

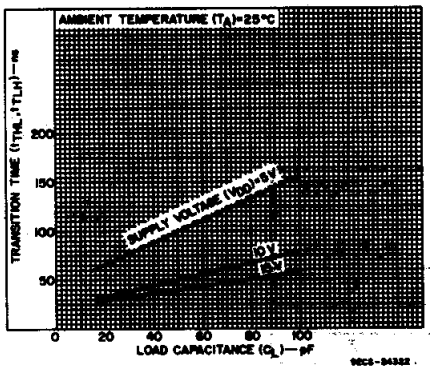

Fig.6 – Typical transition time as a function of load capacitance.

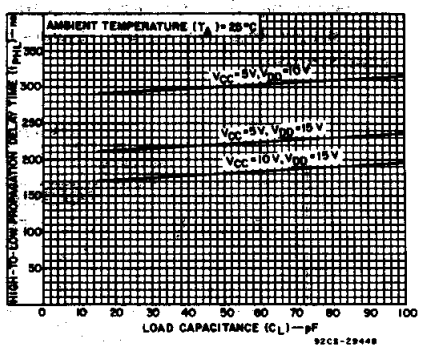

Fig.7 – Typical high-to-low propagation delay time as a function of load capacitance.

DYNAMIC ELECTRICAL CHARACTERISTICS at T_A = 25°C, Input t_r, t_f = 20 ns, C_L = 50 pF, R_L = 200 kΩ unless otherwise specified

CHARACTERISTIC	SHIFTING MODE	V_{CC} (V)	V_{DD} (V)	LIMITS Typ.	LIMITS Max.	UNITS
Propagation Delay – Data Input to Output: High-to-Low Level, t_{PHL}	L–H	5	10	300	600	ns
		5	15	220	440	
		10	15	180	360	
	H–L	10	5	250	500	
		15	5	250	500	
		15	10	120	240	
Low-to-High Level, t_{PLH}	L–H	5	10	130	260	ns
		5	15	120	240	
		10	15	70	140	
	H–L	10	5	230	460	
		15	5	230	460	
		15	10	80	160	
3-State Disable Delay: R_L = 1 kΩ Output High to High Impedance, t_{PHZ}	L–H	5	10	60	120	ns
		5	15	75	150	
		10	15	35	70	
	H–L	10	5	200	400	
		15	5	200	400	
		15	10	40	80	
Output Low to High Impedance, t_{PLZ}	L–H	5	10	370	740	ns
		5	15	300	600	
		10	15	250	500	
	H–L	10	5	250	500	
		15	5	250	500	
		15	10	130	260	
High Impedance to Output High, t_{PZH}	L–H	5	10	320	640	ns
		5	15	230	460	
		10	15	180	360	
	H–L	10	5	300	600	
		15	5	300	600	
		15	10	130	260	
High Impedance to Output Low, t_{PZL}	L–H	5	10	100	200	ns
		5	15	80	160	
		10	15	40	80	
	H–L	10	5	200	400	
		15	5	200	400	
		15	10	40	80	
Transition Time, t_{THL}, t_{TLH}	L–H	5	10	50	100	ns
		5	15	40	80	
		10	15	40	80	
	H–L	10	5	100	200	
		15	5	100	200	
		15	10	50	100	
Input Capacitance, C_I		Any Input		5	7.5	pF

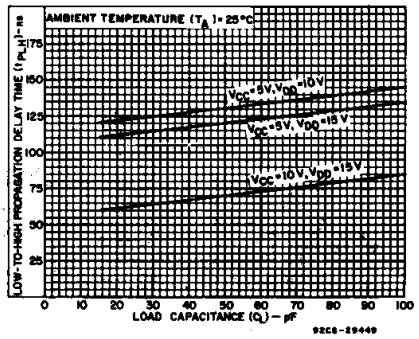

Fig.8 – Typical low-to-high propagation delay time as a function of load capacitance.

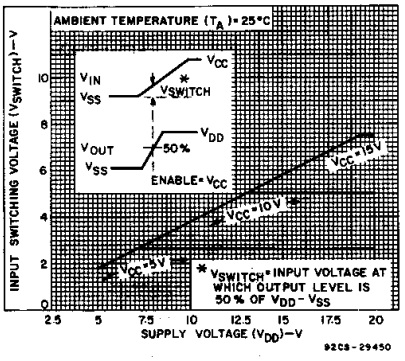

Fig.9 – Typical input switching as a function of high-level supply voltage.

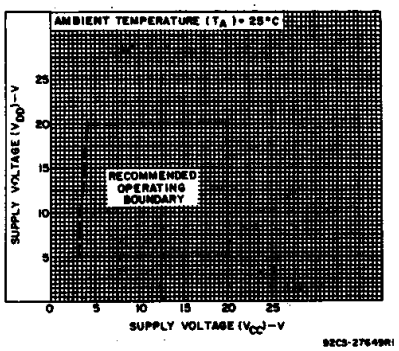

Fig.10 – High-level supply voltage vs. low-level supply voltage.

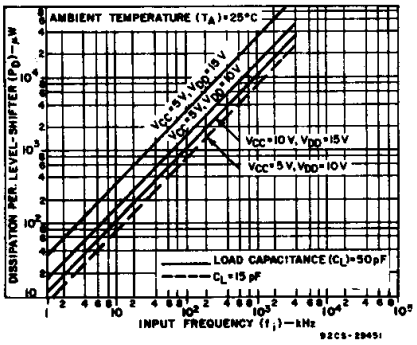

Fig.11 – Typical dynamic power dissipation as a function of input frequency.

TEST CIRCUITS

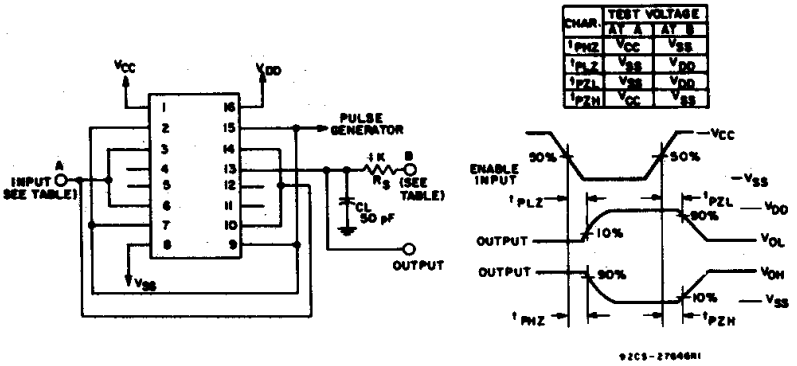

CHAR.	TEST VOLTAGE AT A	TEST VOLTAGE AT B
t_{PHZ}	V_{CC}	V_{SS}
t_{PLZ}	V_{SS}	V_{DD}
t_{PZL}	V_{SS}	V_{DD}
t_{PZH}	V_{CC}	V_{SS}

Fig. 12 – Output enable delay times test circuit and waveforms.

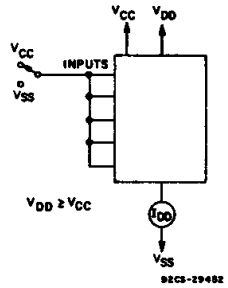

Fig. 13 – Quiescent device current.

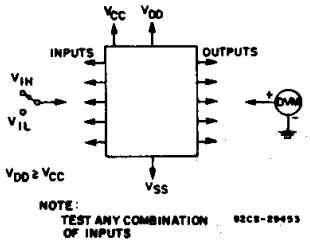

Fig. 14 – Input voltage.

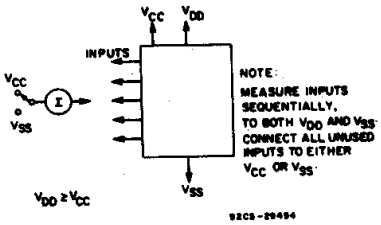

Fig. 15 – Input current.

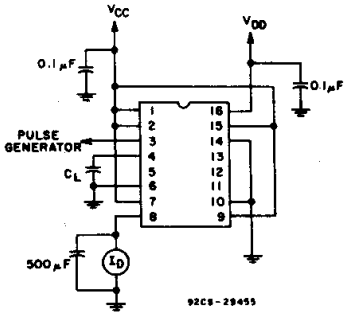

Fig. 16 – Dynamic power dissipation test circuit.

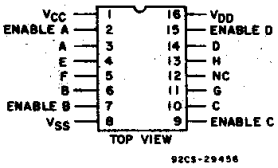

CD40109B
TERMINAL ASSIGNMENT

Dimensions in parentheses are in millimeters and are derived from the basic inch dimensions as indicated. Grid graduations are in mils (10^{-3} inch).

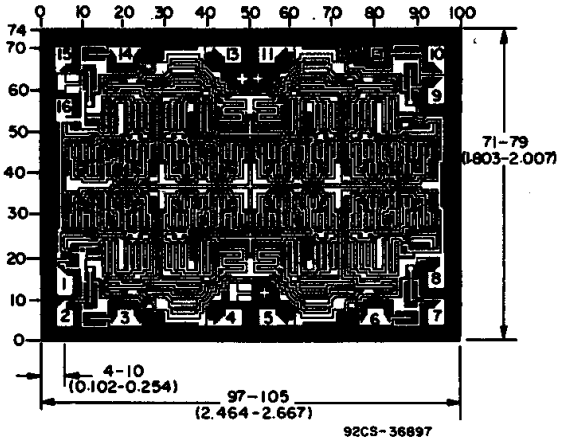

Dimensions and pad layout for CD40109BH.

PACKAGING INFORMATION

Orderable part number	Status (1)	Material type (2)	Package | Pins	Package qty | Carrier	RoHS (3)	Lead finish/ Ball material (4)	MSL rating/ Peak reflow (5)	Op temp (°C)	Part marking (6)
CD40109BE	Active	Production	PDIP (N) | 16	25 | TUBE	Yes	NIPDAU	N/A for Pkg Type	-55 to 125	CD40109BE
CD40109BE.A	Active	Production	PDIP (N) | 16	25 | TUBE	Yes	NIPDAU	N/A for Pkg Type	-55 to 125	CD40109BE
CD40109BF	Active	Production	CDIP (J) | 16	25 | TUBE	No	SNPB	N/A for Pkg Type	-55 to 125	CD40109BF
CD40109BF.A	Active	Production	CDIP (J) | 16	25 | TUBE	No	SNPB	N/A for Pkg Type	-55 to 125	CD40109BF
CD40109BF3A	Active	Production	CDIP (J) | 16	25 | TUBE	No	SNPB	N/A for Pkg Type	-55 to 125	CD40109BF3A
CD40109BF3A.A	Active	Production	CDIP (J) | 16	25 | TUBE	No	SNPB	N/A for Pkg Type	-55 to 125	CD40109BF3A
CD40109BNSR	Active	Production	SOP (NS) | 16	2000 | LARGE T&R	Yes	NIPDAU	Level-1-260C-UNLIM	-55 to 125	CD40109B
CD40109BNSR.A	Active	Production	SOP (NS) | 16	2000 | LARGE T&R	Yes	NIPDAU	Level-1-260C-UNLIM	-55 to 125	CD40109B
CD40109BNSRE4	Active	Production	SOP (NS) | 16	2000 | LARGE T&R	Yes	NIPDAU	Level-1-260C-UNLIM	-55 to 125	CD40109B
CD40109BPW	Active	Production	TSSOP (PW) | 16	90 | TUBE	Yes	NIPDAU	Level-1-260C-UNLIM	-55 to 125	CM0109B
CD40109BPW.A	Active	Production	TSSOP (PW) | 16	90 | TUBE	Yes	NIPDAU	Level-1-260C-UNLIM	-55 to 125	CM0109B
CD40109BPWE4	Active	Production	TSSOP (PW) | 16	90 | TUBE	Yes	NIPDAU	Level-1-260C-UNLIM	-55 to 125	CM0109B
CD40109BPWR	Active	Production	TSSOP (PW) | 16	2000 | LARGE T&R	Yes	NIPDAU	Level-1-260C-UNLIM	-55 to 125	CM0109B
CD40109BPWR.A	Active	Production	TSSOP (PW) | 16	2000 | LARGE T&R	Yes	NIPDAU	Level-1-260C-UNLIM	-55 to 125	CM0109B
CD40109BPWRE4	Active	Production	TSSOP (PW) | 16	2000 | LARGE T&R	Yes	NIPDAU	Level-1-260C-UNLIM	-55 to 125	CM0109B
CD40109BPWRG4	Active	Production	TSSOP (PW) | 16	2000 | LARGE T&R	Yes	NIPDAU	Level-1-260C-UNLIM	-55 to 125	CM0109B

(1) **Status:** For more details on status, see our product life cycle.

(2) **Material type:** When designated, preproduction parts are prototypes/experimental devices, and are not yet approved or released for full production. Testing and final process, including without limitation quality assurance, reliability performance testing, and/or process qualification, may not yet be complete, and this item is subject to further changes or possible discontinuation. If available for ordering, purchases will be subject to an additional waiver at checkout, and are intended for early internal evaluation purposes only. These items are sold without warranties of any kind.

(3) **RoHS values:** Yes, No, RoHS Exempt. See the TI RoHS Statement for additional information and value definition.

(4) **Lead finish/Ball material:** Parts may have multiple material finish options. Finish options are separated by a vertical ruled line. Lead finish/Ball material values may wrap to two lines if the finish value exceeds the maximum column width.

(5) **MSL rating/Peak reflow:** The moisture sensitivity level ratings and peak solder (reflow) temperatures. In the event that a part has multiple moisture sensitivity ratings, only the lowest level per JEDEC standards is shown. Refer to the shipping label for the actual reflow temperature that will be used to mount the part to the printed circuit board.

(6) **Part marking:** There may be an additional marking, which relates to the logo, the lot trace code information, or the environmental category of the part.

Multiple part markings will be inside parentheses. Only one part marking contained in parentheses and separated by a "~" will appear on a part. If a line is indented then it is a continuation of the previous line and the two combined represent the entire part marking for that device.

Important Information and Disclaimer: The information provided on this page represents TI's knowledge and belief as of the date that it is provided. TI bases its knowledge and belief on information provided by third parties, and makes no representation or warranty as to the accuracy of such information. Efforts are underway to better integrate information from third parties. TI has taken and continues to take reasonable steps to provide representative and accurate information but may not have conducted destructive testing or chemical analysis on incoming materials and chemicals. TI and TI suppliers consider certain information to be proprietary, and thus CAS numbers and other limited information may not be available for release.

In no event shall TI's liability arising out of such information exceed the total purchase price of the TI part(s) at issue in this document sold by TI to Customer on an annual basis.

OTHER QUALIFIED VERSIONS OF CD40109B, CD40109B-MIL :

- Catalog : CD40109B
- Automotive : CD40109B-Q1, CD40109B-Q1
- Military : CD40109B-MIL

NOTE: Qualified Version Definitions:

- Catalog - TI's standard catalog product
- Automotive - Q100 devices qualified for high-reliability automotive applications targeting zero defects
- Military - QML certified for Military and Defense Applications

TAPE AND REEL INFORMATION

REEL DIMENSIONS

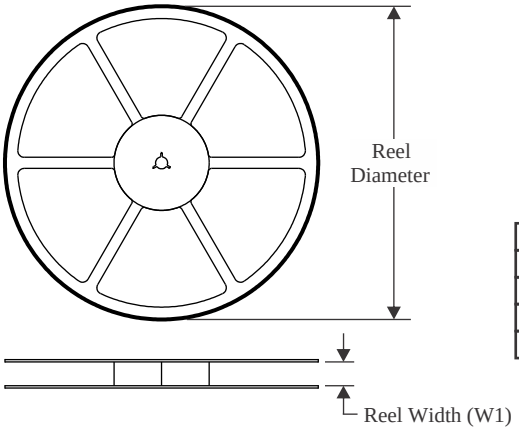

TAPE DIMENSIONS

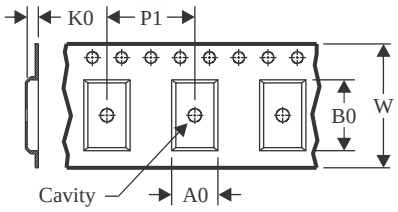

A0	Dimension designed to accommodate the component width
B0	Dimension designed to accommodate the component length
K0	Dimension designed to accommodate the component thickness
W	Overall width of the carrier tape
P1	Pitch between successive cavity centers

QUADRANT ASSIGNMENTS FOR PIN 1 ORIENTATION IN TAPE

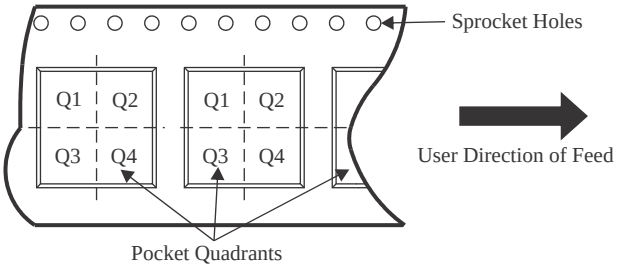

*All dimensions are nominal

Device	Package Type	Package Drawing	Pins	SPQ	Reel Diameter (mm)	Reel Width W1 (mm)	A0 (mm)	B0 (mm)	K0 (mm)	P1 (mm)	W (mm)	Pin1 Quadrant
CD40109BNSR	SOP	NS	16	2000	330.0	16.4	8.1	10.4	2.5	12.0	16.0	Q1
CD40109BPWR	TSSOP	PW	16	2000	330.0	12.4	6.9	5.6	1.6	8.0	12.0	Q1

TAPE AND REEL BOX DIMENSIONS

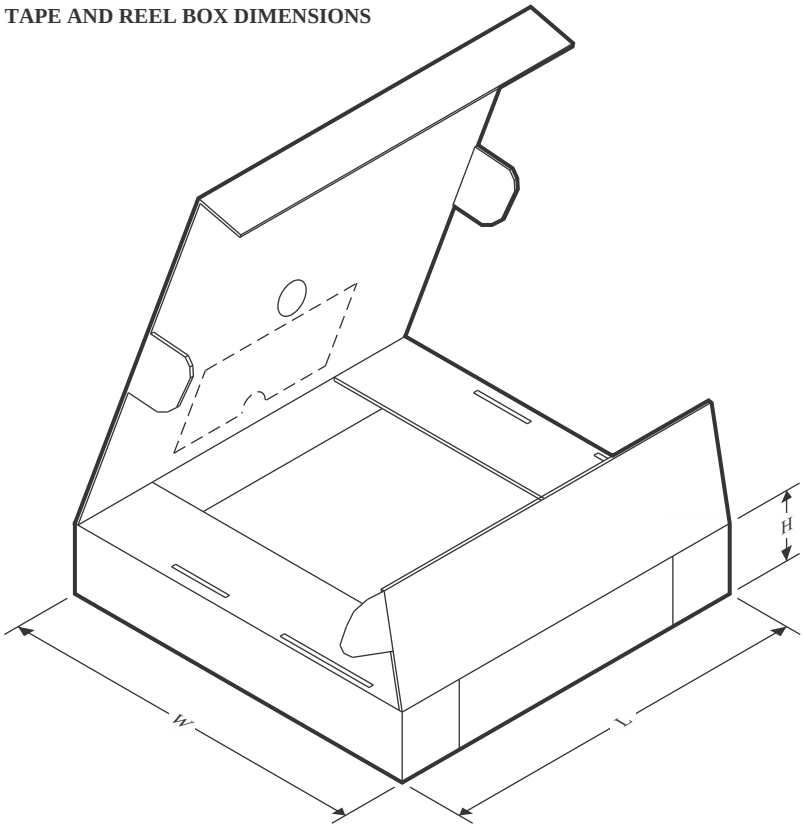

*All dimensions are nominal

Device	Package Type	Package Drawing	Pins	SPQ	Length (mm)	Width (mm)	Height (mm)
CD40109BNSR	SOP	NS	16	2000	367.0	367.0	38.0
CD40109BPWR	TSSOP	PW	16	2000	356.0	356.0	35.0

TUBE

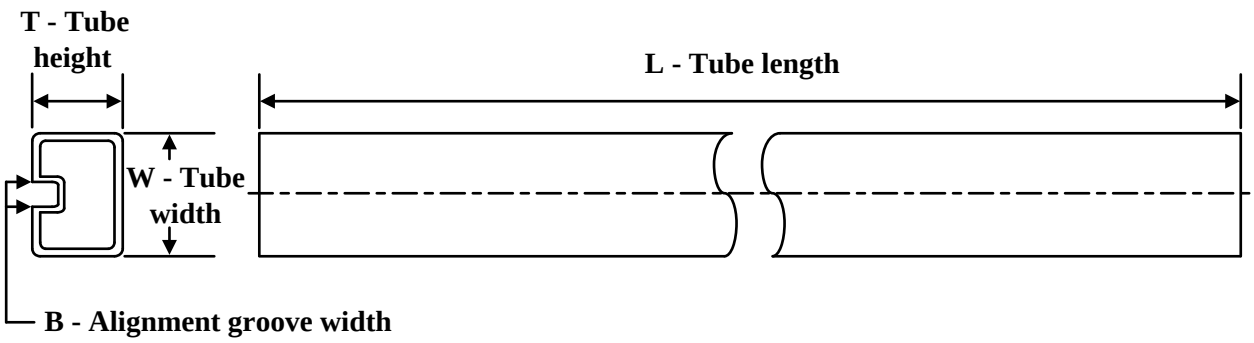

*All dimensions are nominal

Device	Package Name	Package Type	Pins	SPQ	L (mm)	W (mm)	T (µm)	B (mm)
CD40109BE	N	PDIP	16	25	506	13.97	11230	4.32
CD40109BE	N	PDIP	16	25	506	13.97	11230	4.32
CD40109BE.A	N	PDIP	16	25	506	13.97	11230	4.32
CD40109BE.A	N	PDIP	16	25	506	13.97	11230	4.32
CD40109BPW	PW	TSSOP	16	90	530	10.2	3600	3.5
CD40109BPW.A	PW	TSSOP	16	90	530	10.2	3600	3.5
CD40109BPWE4	PW	TSSOP	16	90	530	10.2	3600	3.5

PW0016A

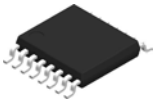

PACKAGE OUTLINE

TSSOP - 1.2 mm max height

SMALL OUTLINE PACKAGE

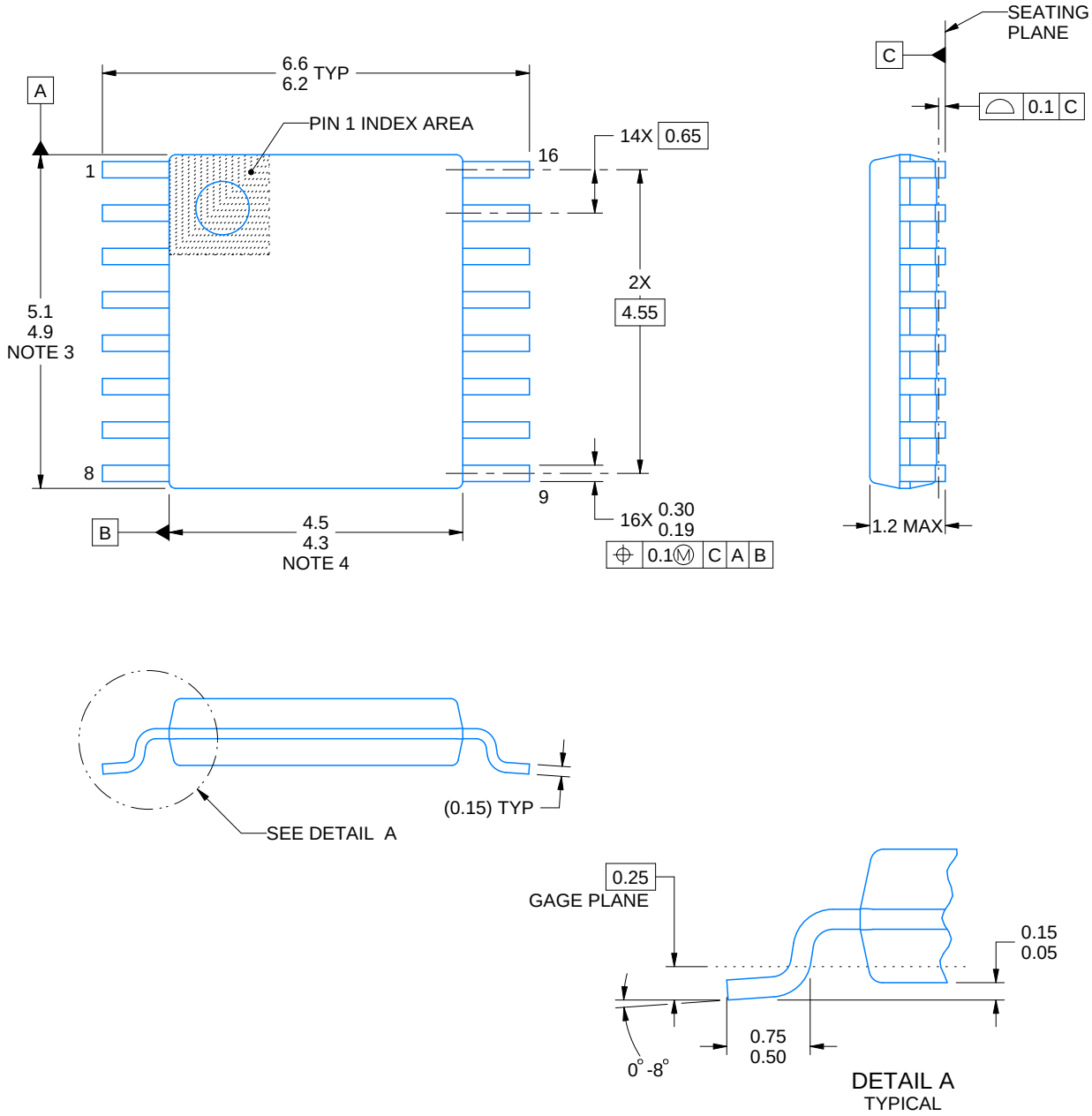

NOTES:

1. All linear dimensions are in millimeters. Any dimensions in parenthesis are for reference only. Dimensioning and tolerancing per ASME Y14.5M.
2. This drawing is subject to change without notice.
3. This dimension does not include mold flash, protrusions, or gate burrs. Mold flash, protrusions, or gate burrs shall not exceed 0.15 mm per side.
4. This dimension does not include interlead flash. Interlead flash shall not exceed 0.25 mm per side.
5. Reference JEDEC registration MO-153.

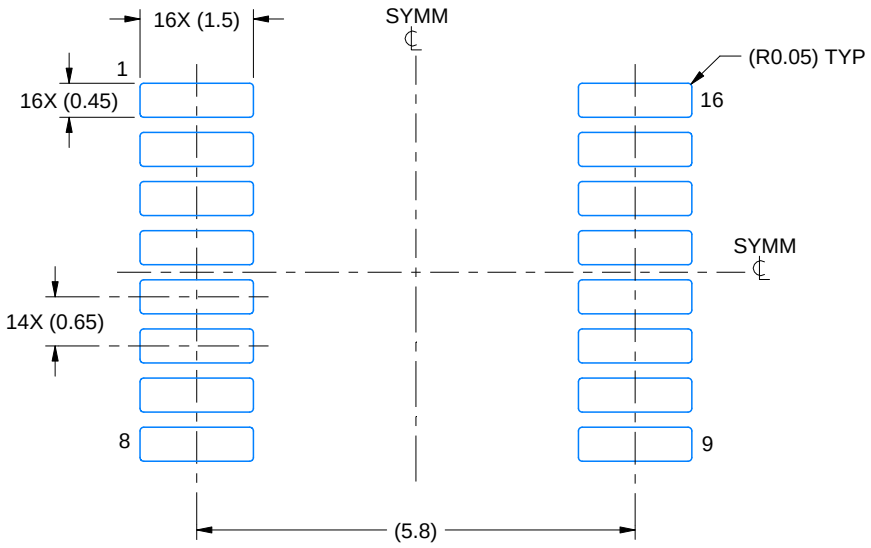

LAND PATTERN EXAMPLE
EXPOSED METAL SHOWN
SCALE: 10X

NON-SOLDER MASK DEFINED (PREFERRED)

SOLDER MASK DEFINED

SOLDER MASK DETAILS

4220204/A 02/2017

NOTES: (continued)

6. Publication IPC-7351 may have alternate designs.
7. Solder mask tolerances between and around signal pads can vary based on board fabrication site.

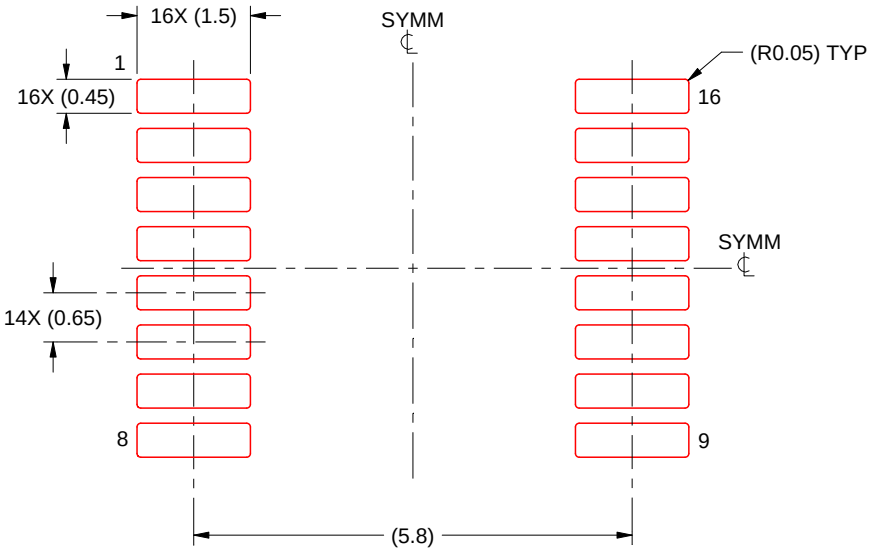

SOLDER PASTE EXAMPLE
BASED ON 0.125 mm THICK STENCIL
SCALE: 10X

4220204/A 02/2017

NOTES: (continued)

8. Laser cutting apertures with trapezoidal walls and rounded corners may offer better paste release. IPC-7525 may have alternate design recommendations.
9. Board assembly site may have different recommendations for stencil design.

MECHANICAL DATA

NS (R-PDSO-G)** **PLASTIC SMALL-OUTLINE PACKAGE**

14-PINS SHOWN

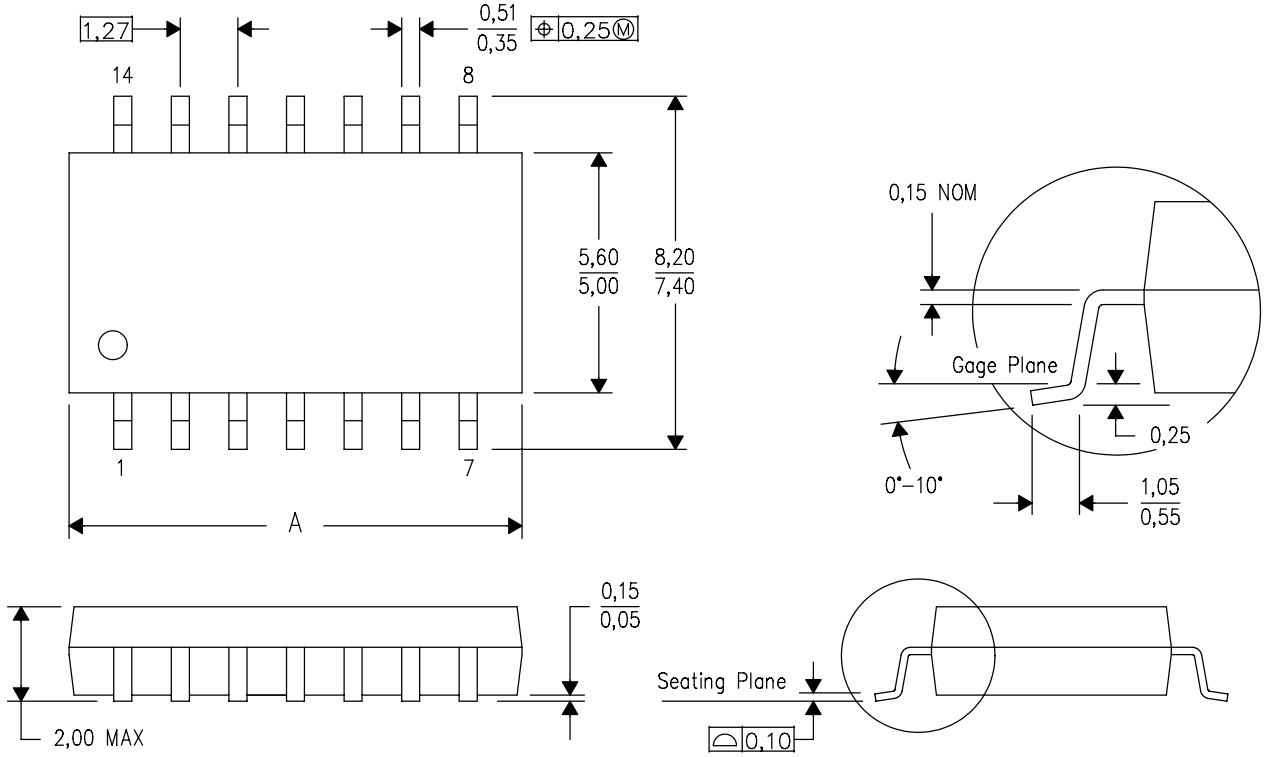

DIM \ PINS **	14	16	20	24
A MAX	10,50	10,50	12,90	15,30
A MIN	9,90	9,90	12,30	14,70

4040062/C 03/03

NOTES:
A. All linear dimensions are in millimeters.
B. This drawing is subject to change without notice.
C. Body dimensions do not include mold flash or protrusion, not to exceed 0,15.

J (R–GDIP–T**) CERAMIC DUAL IN–LINE PACKAGE

14 LEADS SHOWN

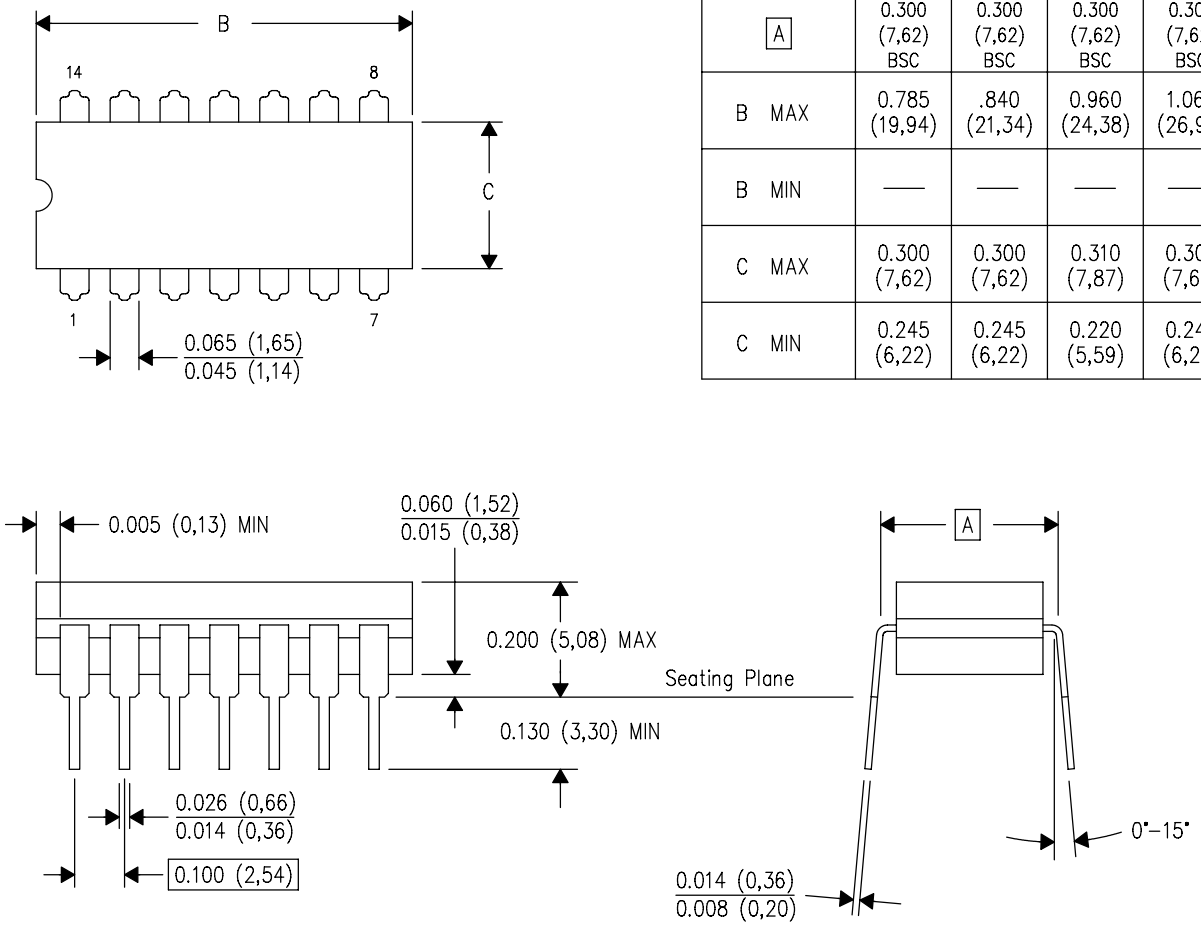

DIM \ PINS **	14	16	18	20
A	0.300 (7,62) BSC	0.300 (7,62) BSC	0.300 (7,62) BSC	0.300 (7,62) BSC
B MAX	0.785 (19,94)	.840 (21,34)	0.960 (24,38)	1.060 (26,92)
B MIN	—	—	—	—
C MAX	0.300 (7,62)	0.300 (7,62)	0.310 (7,87)	0.300 (7,62)
C MIN	0.245 (6,22)	0.245 (6,22)	0.220 (5,59)	0.245 (6,22)

4040083/F 03/03

NOTES:
- A. All linear dimensions are in inches (millimeters).
- B. This drawing is subject to change without notice.
- C. This package is hermetically sealed with a ceramic lid using glass frit.
- D. Index point is provided on cap for terminal identification only on press ceramic glass frit seal only.
- E. Falls within MIL STD 1835 GDIP1–T14, GDIP1–T16, GDIP1–T18 and GDIP1–T20.

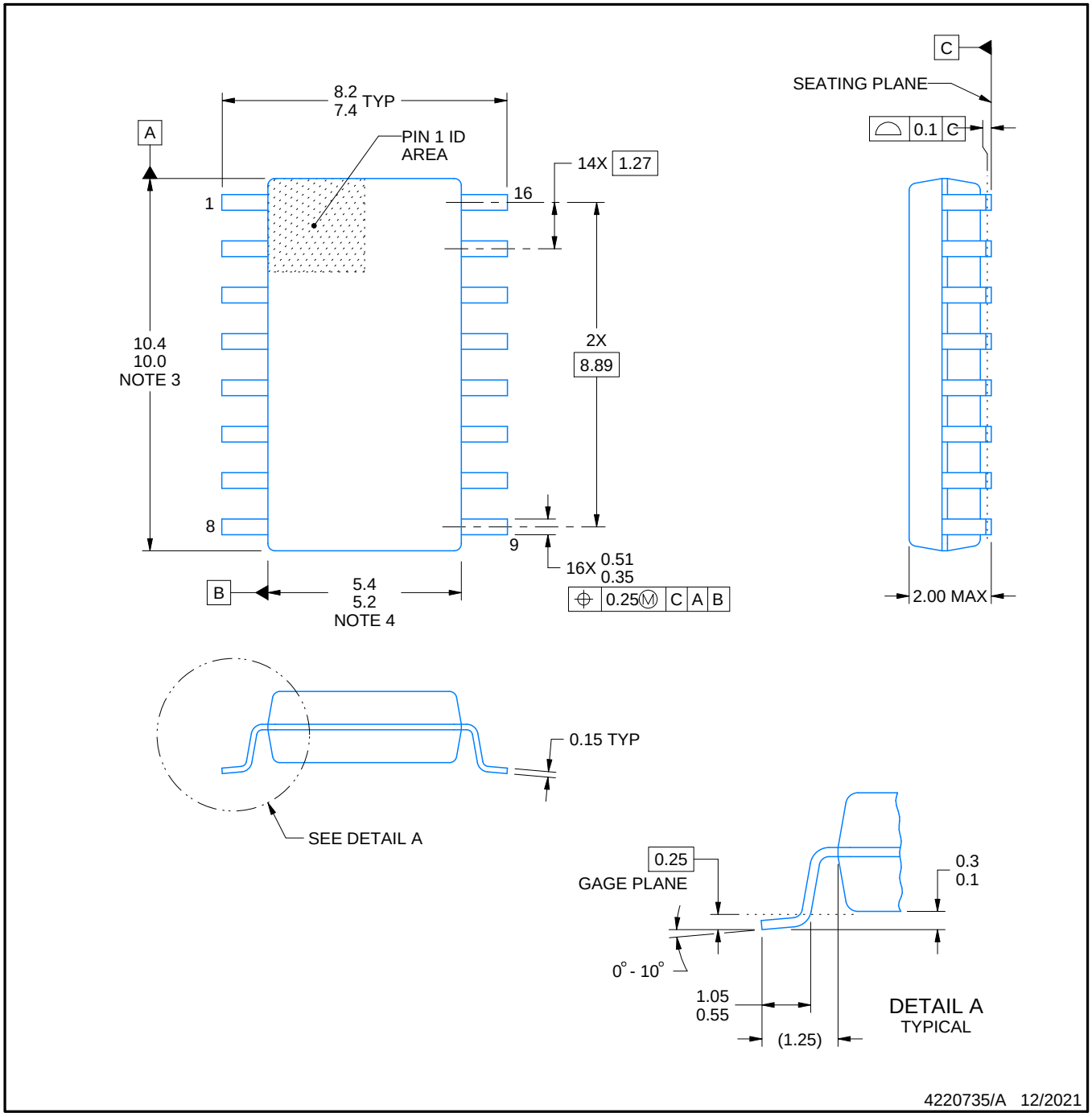

NOTES:

1. All linear dimensions are in millimeters. Dimensions in parenthesis are for reference only. Dimensioning and tolerancing per ASME Y14.5M.
2. This drawing is subject to change without notice.
3. This dimension does not include mold flash, protrusions, or gate burrs. Mold flash, protrusions, or gate burrs shall not exceed 0.15 mm, per side.
4. This dimension does not include interlead flash. Interlead flash shall not exceed 0.25 mm, per side.

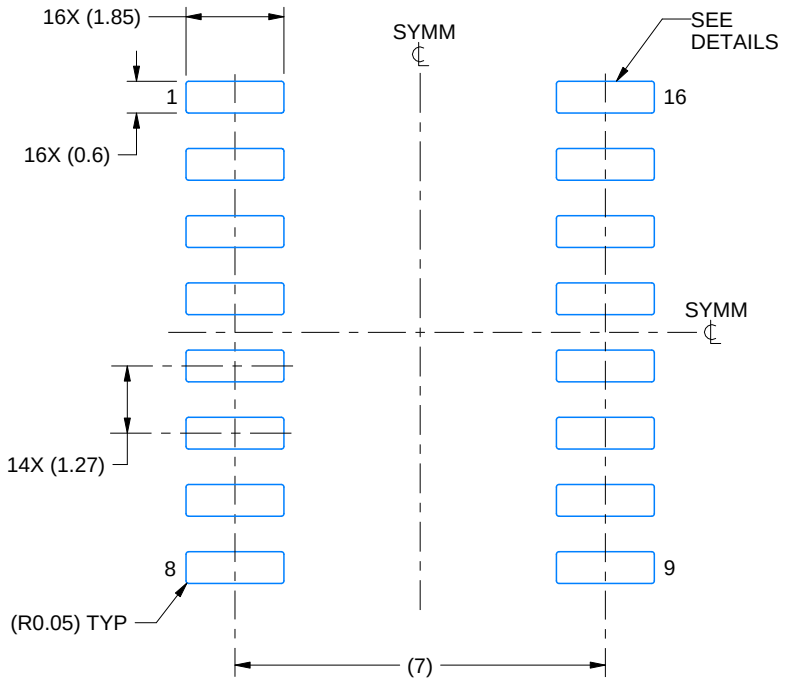

LAND PATTERN EXAMPLE
SCALE:7X

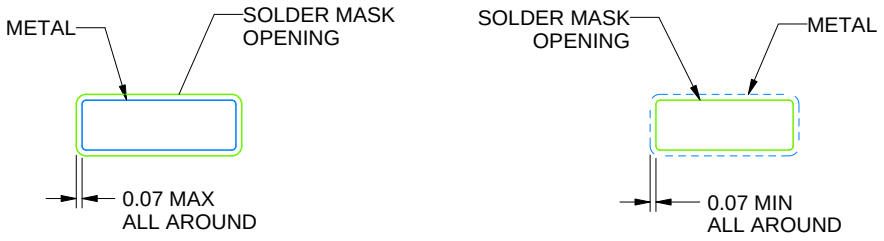

NON SOLDER MASK DEFINED

SOLDER MASK DEFINED

SOLDER MASK DETAILS

4220735/A 12/2021

NOTES: (continued)

5. Publication IPC-7351 may have alternate designs.
6. Solder mask tolerances between and around signal pads can vary based on board fabrication site.

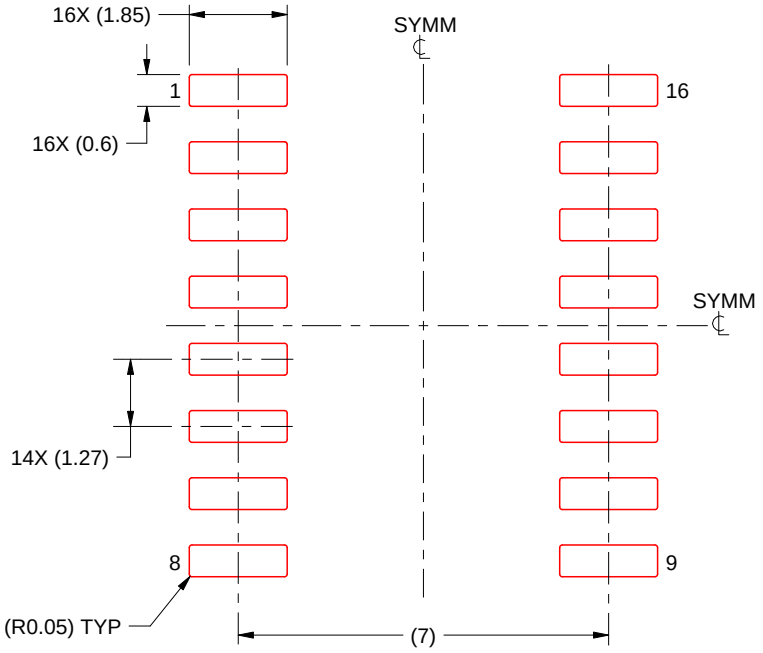

SOLDER PASTE EXAMPLE
BASED ON 0.125 mm THICK STENCIL
SCALE:7X

4220735/A 12/2021

NOTES: (continued)

7. Laser cutting apertures with trapezoidal walls and rounded corners may offer better paste release. IPC-7525 may have alternate design recommendations.
8. Board assembly site may have different recommendations for stencil design.

N (R–PDIP–T**) PLASTIC DUAL–IN–LINE PACKAGE

16 PINS SHOWN

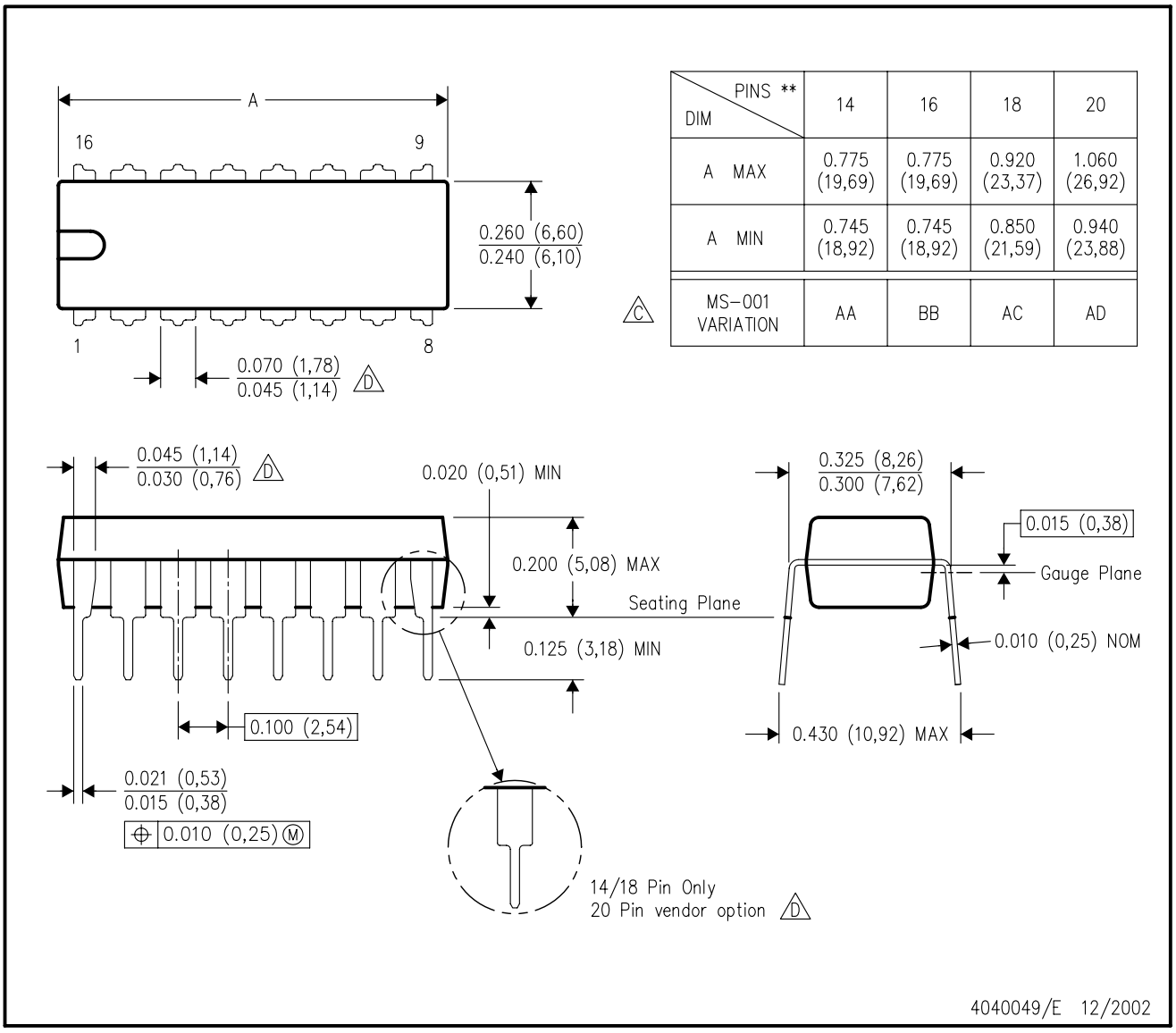

DIM \ PINS **	14	16	18	20
A MAX	0.775 (19,69)	0.775 (19,69)	0.920 (23,37)	1.060 (26,92)
A MIN	0.745 (18,92)	0.745 (18,92)	0.850 (21,59)	0.940 (23,88)
MS–001 VARIATION (C)	AA	BB	AC	AD

NOTES:
A. All linear dimensions are in inches (millimeters).
B. This drawing is subject to change without notice.
C. Falls within JEDEC MS–001, except 18 and 20 pin minimum body length (Dim A).
D. The 20 pin end lead shoulder width is a vendor option, either half or full width.

IMPORTANT NOTICE AND DISCLAIMER

TI PROVIDES TECHNICAL AND RELIABILITY DATA (INCLUDING DATA SHEETS), DESIGN RESOURCES (INCLUDING REFERENCE DESIGNS), APPLICATION OR OTHER DESIGN ADVICE, WEB TOOLS, SAFETY INFORMATION, AND OTHER RESOURCES “AS IS” AND WITH ALL FAULTS, AND DISCLAIMS ALL WARRANTIES, EXPRESS AND IMPLIED, INCLUDING WITHOUT LIMITATION ANY IMPLIED WARRANTIES OF MERCHANTABILITY, FITNESS FOR A PARTICULAR PURPOSE OR NON-INFRINGEMENT OF THIRD PARTY INTELLECTUAL PROPERTY RIGHTS.

These resources are intended for skilled developers designing with TI products. You are solely responsible for (1) selecting the appropriate TI products for your application, (2) designing, validating and testing your application, and (3) ensuring your application meets applicable standards, and any other safety, security, regulatory or other requirements.

These resources are subject to change without notice. TI grants you permission to use these resources only for development of an application that uses the TI products described in the resource. Other reproduction and display of these resources is prohibited. No license is granted to any other TI intellectual property right or to any third party intellectual property right. TI disclaims responsibility for, and you will fully indemnify TI and its representatives against, any claims, damages, costs, losses, and liabilities arising out of your use of these resources.

TI’s products are provided subject to TI’s Terms of Sale or other applicable terms available either on ti.com or provided in conjunction with such TI products. TI’s provision of these resources does not expand or otherwise alter TI’s applicable warranties or warranty disclaimers for TI products.

TI objects to and rejects any additional or different terms you may have proposed.

Mailing Address: Texas Instruments, Post Office Box 655303, Dallas, Texas 75265
Copyright © 2025, Texas Instruments Incorporated