SN74LV4052A-Q1 Automotive Dual 4-Channel Analog Multiplexers and Demultiplexers

1 Features

- Qualified for automotive applications
- AEC-Q100 qualified with the following results:
  - Device temperature grade 1: –40°C to +125°C ambient operating temperature range
  - Device HBM ESD classification level 2
  - Device CDM ESD classification level C4B
- Supports mixed-mode voltage operation on all ports
- Fast switching
- High on-off output-voltage ratio
- Low crosstalk between switches
- Extremely low input current

2 Applications

- Automotive:
  - Signal gating
  - Chopping
  - Modulation or demodulation (modem)
  - Signal multiplexing for analog-to-digital and digital-to-analog conversion systems

3 Description

These dual 4-channel CMOS analog multiplexers and demultiplexers are designed for 1.0V to 5.5V V_{CC} operation.

The SN7LV4052A-Q1 devices handle both analog and digital signals. Each channel permits signals with amplitudes up to 5.5V (peak).

Applications include signal gating, chopping, modulation or demodulation (modem), and signal multiplexing for analog-to-digital and digital-to-analog conversion systems.

Package Information

PART NUMBER	PACKAGE(1)	PACKAGE SIZE(2)
SN74LV4052A-Q1	PW (TSSOP, 16)	5mm × 6.4mm
	DYY (SOT-23-THIN, 16)	4.2mm x 3.26mm

(1) For more information, see Section 11.
(2) The package size (length × width) is a nominal value and includes pins, where applicable.

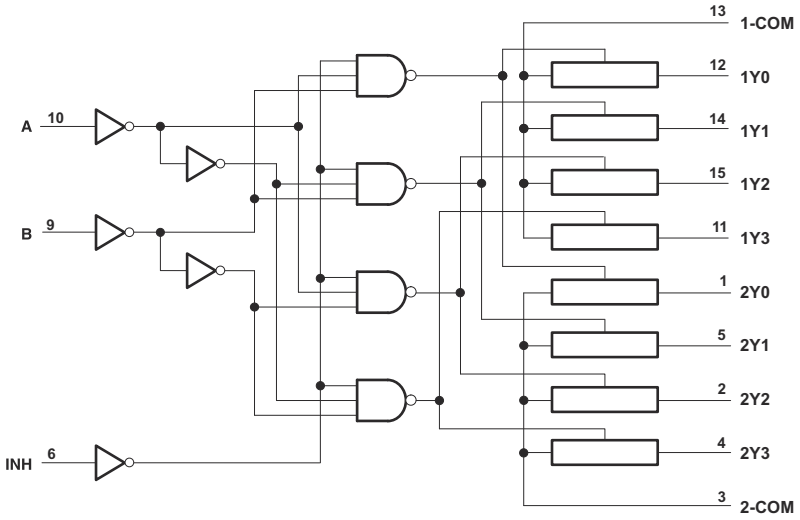

Logic Diagram (Positive Logic)

An IMPORTANT NOTICE at the end of this data sheet addresses availability, warranty, changes, use in safety-critical applications, intellectual property matters and other important disclaimers. PRODUCTION DATA.

Table of Contents

1 Features....1
2 Applications....1
3 Description....1
4 Pin Configuration and Functions....3
5 Specifications....4
5.1 Absolute Maximum Ratings....4
5.2 ESD Ratings....4
5.3 Thermal Information: SN74LV4052A-Q1....4
5.4 Recommended Operating Conditions....5
5.5 Electrical Characteristics....5
5.6 Timing Characteristics V_{CC} = 2.5 V ± 0.2 V....7
5.7 Timing Characteristics V_{CC} = 3.3 V ± 0.3 V....7
5.8 Timing Characteristics V_{CC} = 5 V ± 0.5 V....7
5.9 AC Characteristics....8
6 Parameter Measurement Information....9
7 Detailed Description....13
7.1 Overview....13
7.2 Functional Block Diagram....13
7.3 Feature Description....13
7.4 Device Functional Modes....13
8 Application and Implementation....14
8.1 Application Information....14
8.2 Typical Application....14
8.3 Power Supply Recommendations....15
8.4 Layout....15
9 Device and Documentation Support....16
9.1 Receiving Notification of Documentation Updates....16
9.2 Support Resources....16
9.3 Trademarks....16
9.4 Electrostatic Discharge Caution....16
9.5 Glossary....16
10 Revision History....16
11 Mechanical, Packaging, and Orderable Information....17

Copyright © 2024 Texas Instruments Incorporated

4 Pin Configuration and Functions

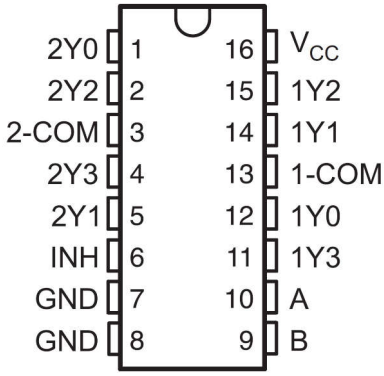

Figure 4-1. PW, DYY Package, 16-Pin TSSOP, SOT-23-THIN (Top View)

Table 4-1. Pin Functions

PIN		TYPE(1) (2)	DESCRIPTION
NAME	NO.		
2Y0	1	I(1)	Input to mux 2
2Y2	2	I(1)	Input to mux 2
2-COM	3	O(1)	Output of mux 2
2Y3	4	I(1)	Input to mux 2
2Y1	5	I(1)	Input to mux 2
INH	6	I	Enables the outputs of the device. Logic low level with turn the outputs on, high level will turn them off.
GND	7	-	Ground
GND	8	-	Ground
B	9	I	Selector line for outputs (see Section 7.4 for specific information)
A	10	I	Selector line for outputs (see Section 7.4 for specific information)
1Y3	11	I(1)	Input to mux 1
1Y0	12	I(1)	Input to mux 1
1-COM	13	O(1)	Output of mux 1
1Y1	14	I(1)	Input to mux 1
1Y2	15	I(1)	Input to mux 1
V_{CC}	16	I	Device power input

(1) These I/O descriptions represent the device when used as a multiplexer, when this device is operated as a demultiplexer pins 1Y0, 1Y1, 1Y2, 1Y3, 2Y0, 2Y1, 2Y2, 2Y3 may be considered outputs (O) and pins 1-COM and 2-COM may be considered inputs (I).
(2) I = input, O = output

Copyright © 2024 Texas Instruments Incorporated

5 Specifications

5.1 Absolute Maximum Ratings

over operating free-air temperature range (unless otherwise noted)[1] [3]

			MIN	MAX	UNIT
V_{CC}	Supply voltage		–0.5	7.0	V
V_I	Logic input voltage range		–0.5	7.0	V
V_{IO}	Switch I/O voltage range[2] [3]		–0.5	V_{CC} + 0.5	V
I_{IK}	Input clamp current	$V_I < 0$	–20		mA
I_{IOK}	Switch IO diode clamp current	$V_{IO} < 0$ or $V_{IO} > V_{CC}$	–50	50	mA
I_T	Switch continuous current	V_{IO} = 0 to V_{CC}		±25	mA
	Continuous current through V_{CC} or GND			±50	mA
T_{stg}	Storage temperature		–65	150	°C

(1) Operation outside the *Absolute Maximum Ratings* may cause permanent device damage. Absolute maximum ratings do not imply functional operation of the device at these or any other conditions beyond those listed under *Recommended Operating Conditions*. If briefly operating outside the *Recommended Operating Conditions* but within the *Absolute Maximum Ratings*, the device may not sustain damage, but it may not be fully functional. Operating the device in this manner may affect device reliability, functionality, performance, and shorten the device lifetime.
(2) Pins are diode-clamped to the power-supply rails. Over voltage signals must be voltage and current limited to maximum ratings.
(3) This value is limited to 5.5 V maximum

5.2 ESD Ratings

				VALUE	UNIT
$V_{(ESD)}$	Electrostatic discharge	Human body model (HBM), per AEC Q100-002[1]	All pins	±2000	V
$V_{(ESD)}$	Electrostatic discharge	Charged device model (CDM), per AEC Q100-011	All pins	±500	V

(1) AEC Q100-002 indicates that HBM stressing shall be in accordance with the ANSI/ESDA/JEDEC JS-001 specification.

5.3 Thermal Information: SN74LV4052A-Q1

THERMAL METRIC		SN74LV4052A-Q1 PW (TSSOP) 16 PINS	SN74LV4052A-Q1 DYY (SOT) 16 PINS	UNIT
$R_{\theta JA}$	Junction-to-ambient thermal resistance	140.2	199.7	°C/W
$R_{\theta JC(top)}$	Junction-to-case (top) thermal resistance	72.6	121.2	°C/W
$R_{\theta JB}$	Junction-to-board thermal resistance	98.7	129.0	°C/W
Ψ_{JT}	Junction-to-top characterization parameter	13.4	24.6	°C/W
Ψ_{JB}	Junction-to-board characterization parameter	97.3	126.7	°C/W
$R_{\theta JC(bot)}$	Junction-to-case (bottom) thermal resistance	N/A	N/A	°C/W

Copyright © 2024 Texas Instruments Incorporated

5.4 Recommended Operating Conditions

over operating free-air temperature range (unless otherwise noted)[1]

			MIN	NOM	MAX	UNIT
V_{CC}	Supply voltage		1[2]		5.5	V
V_{IH}	High-level input voltage, logic control inputs	V_{CC} = 1.65	1.2		5.5	V
		V_{CC} = 2 V	1.5		5.5	
		V_{CC} = 2.3 V to 2.7 V	V_{CC} x 0.7		5.5	
		V_{CC} = 3 V to 3.6 V	V_{CC} x 0.7		5.5	
		V_{CC} = 4.5 V to 5.5 V	V_{CC} x 0.7		5.5	
V_{IL}	Low-level input voltage, logic control inputs	V_{CC} = 1.65 V	0		0.4	V
		V_{CC} = 2	0		0.5	
		V_{CC} = 2.3V to 2.7V	0		V_{CC} x 0.3	
		V_{CC} = 3 V to 3.6 V	0		V_{CC} x 0.3	
		V_{CC} = 4.5 V to 5.5 V	0		V_{CC} x 0.3	
V_I	Logic control input voltage		0		5.5	V
V_{IO}	Switch input or output voltage		0		V_{CC}	V
Δt/ΔV	Logic input transition rise or fall rate	V_{CC} = 1.0 V to 2.0 V			500	ns/V
		V_{CC} = 2.0 V to 2.7 V			200	
		V_{CC} = 3 V to 3.6 V			100	
		V_{CC} = 4.5 V to 5.5 V			20	
T_A	Ambient temperature		–40		125	°C

(1) All unused inputs of the device must be held at V_{CC} or GND to ensure proper device operation. Refer to TI application report *Implications of Slow or Floating CMOS Inputs*, SCBA004.
(2) When using a V_{CC} of ≤1.2 V, it is recommended to use these devices only for transmitting digital signals.When supply voltage is near 1.2 V the analog switch ON resistance becomes very non-linear

5.5 Electrical Characteristics

over recommended operating free-air temperature range (unless otherwise noted)

PARAMETER		Condition	T_A	V_{CC}	MIN	TYP	MAX	UNIT
r_{ON}	ON-state switch resistance	I_T = 2 mA, V_I = V_{CC} or GND, V_{INH} = V_{IL}	25°C	1.65 V		60	150	Ω
			–40°C to 85°C				225	
			–40°C to 125°C				225	
			25°C	2.3 V		38	180	
			–40°C to 85°C				225	
			–40°C to 125°C				225	
			25°C	3 V		30	150	
			–40°C to 85°C				190	
			–40°C to 125°C				190	
			25°C	4.5 V		22	75	
			–40°C to 85°C				100	
			–40°C to 125°C				100	

Copyright © 2024 Texas Instruments Incorporated

5.5 Electrical Characteristics (continued)

over recommended operating free-air temperature range (unless otherwise noted)

PARAMETER		Condition	T_A	V_{CC}	MIN	TYP	MAX	UNIT
$r_{ON(p)}$	Peak ON-state resistance	I_T = 2 mA, V_I = GND to V_{CC}, V_{INH} = V_{IL}	25°C	1.65 V		220	600	Ω
			–40°C to 85°C				700	
			–40°C to 125°C				700	
			25°C	2.3 V		113	500	
			–40°C to 85°C				600	
			–40°C to 125°C				600	
			25°C	3 V		54	180	
			–40°C to 85°C				225	
			–40°C to 125°C				225	
			25°C	4.5 V		31	100	
			–40°C to 85°C				125	
			–40°C to 125°C				125	
Δr_{ON}	Difference in ON-state resistance between switches	I_T = 2 mA, V_I = GND to V_{CC}, V_{INH} = V_{IL}	25°C	1.65 V		3	40	Ω
			–40°C to 85°C				40	
			–40°C to 125°C				40	
			25°C	2.3 V		2.1	30	
			–40°C to 85°C				40	
			–40°C to 125°C				40	
			25°C	3 V		1.4	20	
			–40°C to 85°C				30	
			–40°C to 125°C				30	
			25°C	4.5 V		1.3	15	
			–40°C to 85°C				20	
			–40°C to 125°C				20	
I_{IH} I_{IL}	Control input current	V_I = 5.5 V or GND	25°C	0 to 5.5 V	-0.1		0.1	μA
			–40°C to 85°C		-1		1	
			–40°C to 125°C		-2		2	
$I_{S(off)}$	OFF-state switch leakage current	V_I = V_{CC} and V_O = GND, or V_I = GND and V_O = V_{CC}, V_{INH} = V_{IH}	25°C	5.5 V	-0.1		0.1	μA
			–40°C to 85°C		-1		1	
			–40°C to 125°C		-2		2	
$I_{S(on)}$	ON-state switch leakage current	V_I = V_{CC} or GND, V_{INH} = V_{IL}	25°C	5.5 V	-0.1		0.1	μA
			–40°C to 85°C		-1		1	
			–40°C to 125°C		-2		2	
I_{CC}	Supply current	V_I = V_{CC} or GND V_{INH} = 0 V	25°C	5.5 V		0.01		μA
			–40°C to 85°C				20	
			–40°C to 125°C				40	
C_{IC}	Control input capacitance	f = 10 MHz	25°C	3.3 V		2		pF
C_{IS}	Common terminal capacitance	f = 10 MHz	25°C	3.3 V		13.2		pF
C_{OS}	Switch ternminal capacitance	f = 10 MHz	25°C	3.3 V		5.7		pF
C_F	Feedthrough capacitance	f = 10 MHz	25°C	3.3 V		0.5		pF

Copyright © 2024 Texas Instruments Incorporated

5.5 Electrical Characteristics (continued)

over recommended operating free-air temperature range (unless otherwise noted)

PARAMETER		Condition	T_A	V_{CC}	MIN	TYP	MAX	UNIT
C_{PD}	Power dissipation capacitance	C_L = 50 pF, f = 10 MHz	25°C	3.3 V		11.8		pF

5.6 Timing Characteristics V_{CC} = 2.5 V ± 0.2 V

PARAMETER		FROM (INPUT)	TO (OUTPUT)	CONDITIONS	T_A	MIN	TYP	MAX	UNIT
t_{PLH} t_{PHL}	Propagation delay time	COM or Yn	Yn or COM	C_L = 15 pF	25°C		1.9	10	ns
					–40°C to 85°C			16	
					–40°C to 125°C			18	
t_{PZH} t_{PZL}	Enable delay time	INH	COM or Yn	C_L = 15 pF	25°C		6.6	18	ns
					–40°C to 85°C			23	
					–40°C to 125°C			25	
t_{PHZ} t_{PLZ}	Disable delay time	INH	COM or Yn	C_L = 15 pF	25°C		7.4	18	ns
					–40°C to 85°C			23	
					–40°C to 125°C			25	
t_{PLH} t_{PHL}	Propagation delay time	COM or Yn	Yn or COM	C_L = 50 pF	25°C		3.8	12	ns
					–40°C to 85°C			18	
					–40°C to 125°C			20	
t_{PZH} t_{PZL}	Enable delay time	INH	COM or Yn	C_L = 50 pF	25°C		7.8	28	ns
					–40°C to 85°C			35	
					–40°C to 125°C			35	
t_{PHZ} t_{PLZ}	Disable delay time	INH	COM or Yn	C_L = 50 pF	25°C		11.5	28	ns
					–40°C to 85°C			35	
					–40°C to 125°C			35	

5.7 Timing Characteristics V_{CC} = 3.3 V ± 0.3 V

PARAMETER		FROM (INPUT)	TO (OUTPUT)	CONDITIONS	T_A	MIN	TYP	MAX	UNIT
t_{PLH} t_{PHL}	Propagation delay time	COM or Yn	Yn or COM	C_L = 50 pF	25°C		2.5	9	ns
					–40°C to 85°C			12	
					–40°C to 125°C			14	
t_{PZH} t_{PZL}	Enable delay time	INH	COM or Yn	C_L = 50 pF	25°C		5.5	20	ns
					–40°C to 85°C			25	
					–40°C to 125°C			25	
t_{PHZ} t_{PLZ}	Disable delay time	INH	COM or Yn	C_L = 50 pF	25°C		8.8	20	ns
					–40°C to 85°C			25	
					–40°C to 125°C			25	

5.8 Timing Characteristics V_{CC} = 5 V ± 0.5 V

PARAMETER		FROM (INPUT)	TO (OUTPUT)	CONDITIONS	T_A	MIN	TYP	MAX	UNIT
t_{PLH} t_{PHL}	Propagation delay time	COM or Yn	Yn or COM	C_L = 50 pF	25°C		1.5	6	ns
					–40°C to 85°C			8	
					–40°C to 125°C			10	

Copyright © 2024 Texas Instruments Incorporated

5.8 Timing Characteristics V_{CC} = 5 V ± 0.5 V (continued)

PARAMETER		FROM (INPUT)	TO (OUTPUT)	CONDITIONS	T_A	MIN	TYP	MAX	UNIT
t_{PZH} t_{PZL}	Enable delay time	INH	COM or Yn	C_L = 50 pF	25°C		4	14	ns
					–40°C to 85°C			18	
					–40°C to 125°C			18	
t_{PHZ} t_{PLZ}	Disable delay time	INH	COM or Yn	C_L = 50 pF	25°C		6.2	14	ns
					–40°C to 85°C			18	
					–40°C to 125°C			18	

5.9 AC Characteristics

PARAMETER	FROM (INPUT)	TO (OUTPUT)	Device	CONDITIONS		MIN	TYP	MAX	UNIT
Frequency response (switch on)	COM or Yn	Yn or COM	SN74LV4052	C_L = 50 pF, R_L = 600 Ω, F_{in} = 1 MHz (sine wave)	V_{CC} = 2.3 V		30		MHz
					V_{CC} = 3 V		35		
					V_{CC} = 4.5 V		50		
Feedthrough attenuation (switch off)	COM or Yn	Yn or COM	ALL	C_L = 50 pF, R_L = 600 Ω, F_{in} = 1 MHz (sine wave)	V_{CC} = 2.3 V		–45		dB
					V_{CC} = 3 V		–45		
					V_{CC} = 4.5 V		–45		
Crosstalk (between any switches)	COM or Yn	Yn or COM	ALL	C_L = 50 pF, R_L = 600 Ω, F_{in} = 1 MHz (sine wave)	V_{CC} = 2.3 V		20		mV
					V_{CC} = 3 V		35		
					V_{CC} = 4.5 V		60		
Sine-wave distortion	COM or Yn	Yn or COM	ALL	C_L = 50 pF, R_L = 10 kΩ, F_{in} = 1 kHz (sine wave)	V_I = 2 V_{p-p} V_{CC} = 2.3 V		0.1		%
					V_I = 2.5 V_{p-p} V_{CC} = 3 V		0.1		
					V_I = 4 V_{p-p} V_{CC} = 4.5 V		0.1		

Copyright © 2024 Texas Instruments Incorporated

6 Parameter Measurement Information

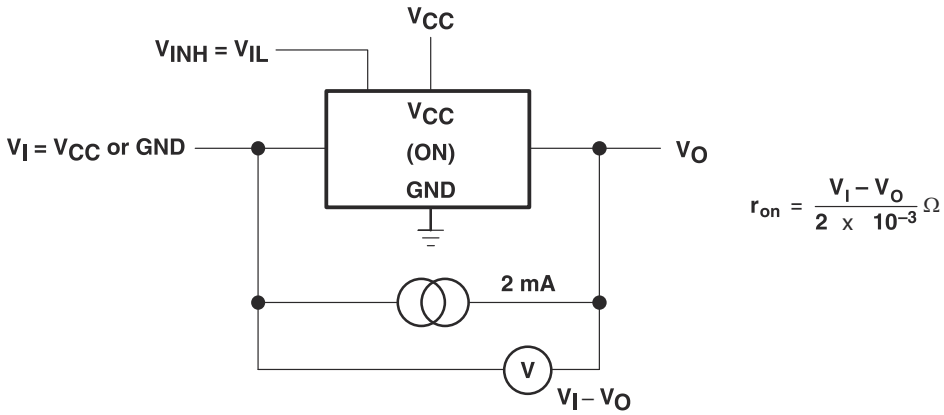

Figure 6-1. On-State Resistance Test Circuit

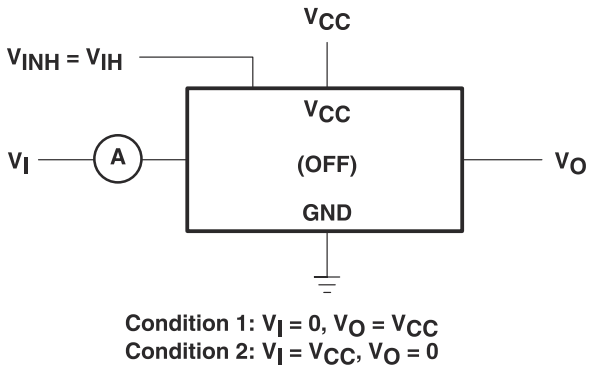

Figure 6-2. Off-State Switch Leakage-Current Test Circuit

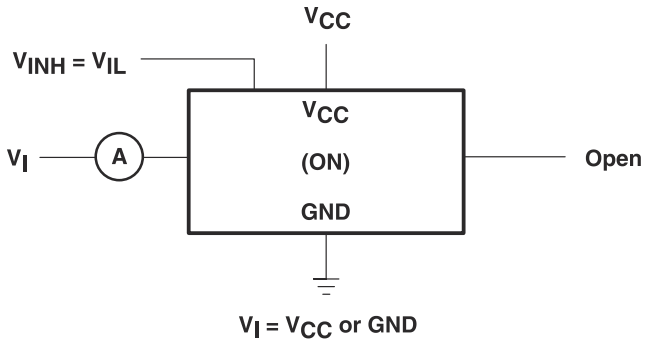

Figure 6-3. On-State Switch Leakage-Current Test Circuit

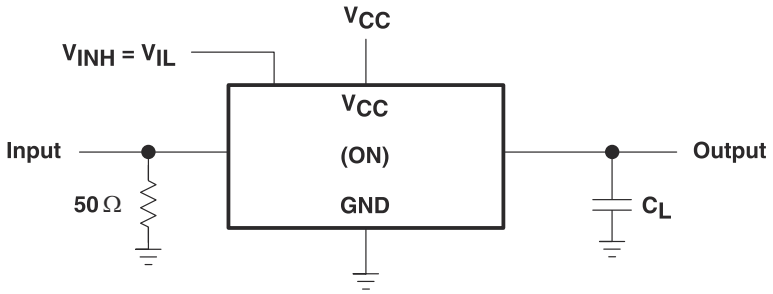

Figure 6-4. Propagation Delay Time, Signal Input to Signal Output

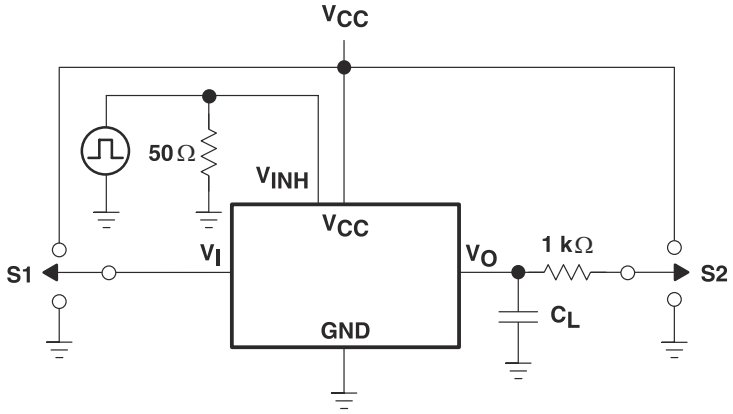

TEST CIRCUIT

TEST	S1	S2
t_{PLZ}/t_{PZL} t_{PHZ}/t_{PZH}	GND V_{CC}	V_{CC} GND

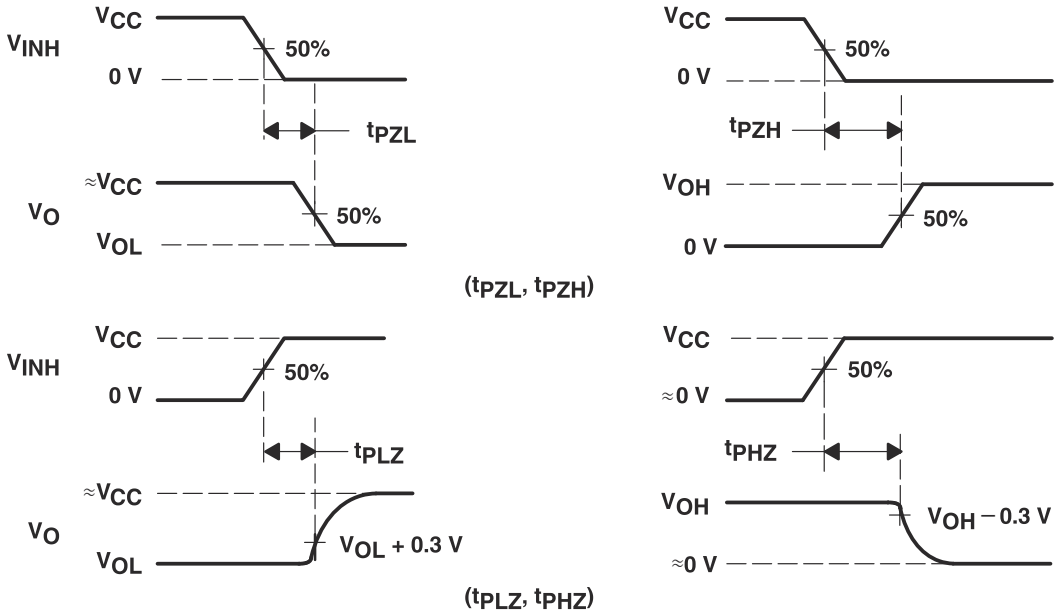

VOLTAGE WAVEFORMS

Figure 6-5. Switching Time (t_{PZL}, t_{PLZ}, t_{PZH}, t_{PHZ}), Control to Signal Output

Copyright © 2024 Texas Instruments Incorporated

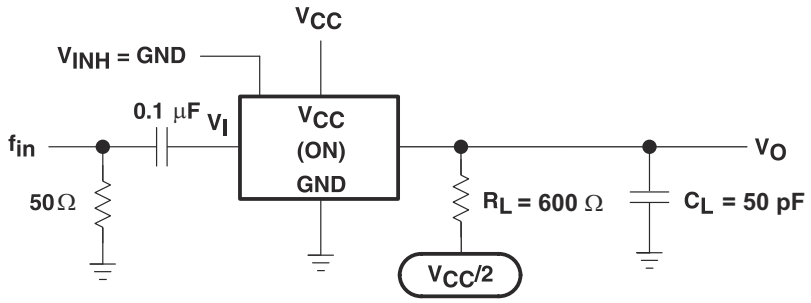

NOTE A: f_{in} is a sine wave.

Figure 6-6. Frequency Response (Switch On)

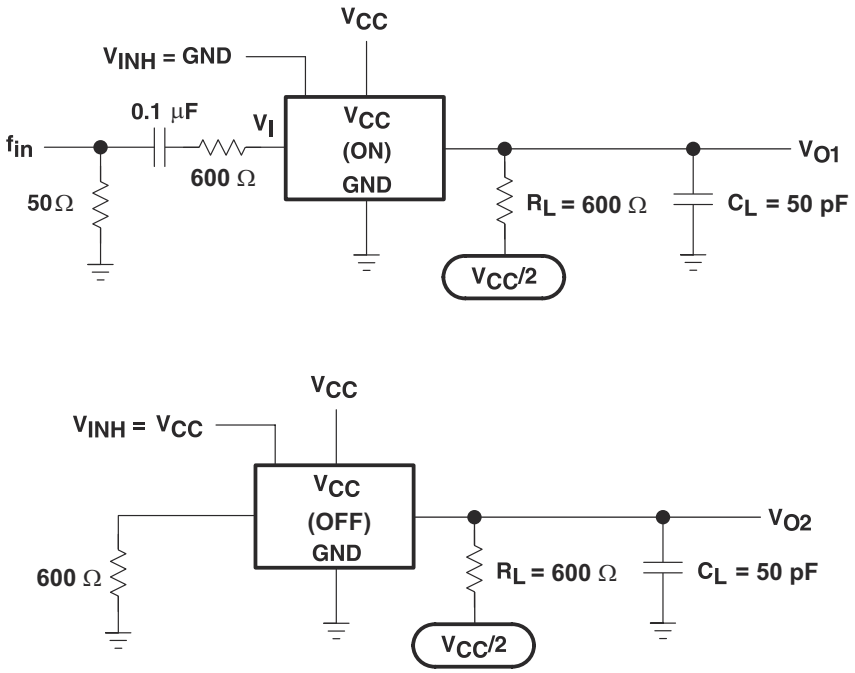

Figure 6-7. Crosstalk Between Any Two Switches

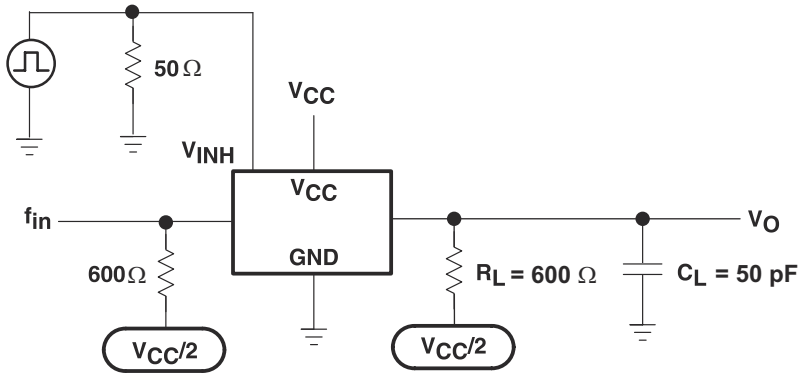

Figure 6-8. Crosstalk Between Control Input and Switch Output

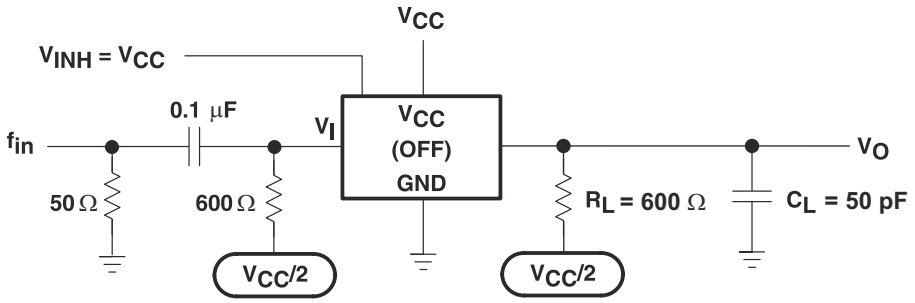

Figure 6-9. Feedthrough Attenuation (Switch Off)

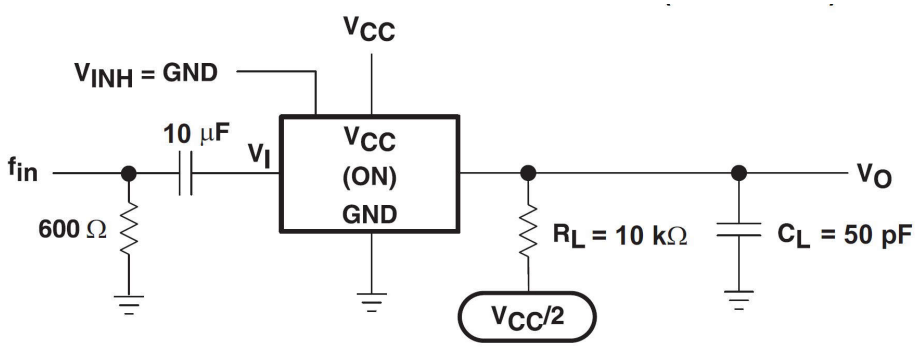

Figure 6-10. Sine-Wave Distortion

Copyright © 2024 Texas Instruments Incorporated

7 Detailed Description

7.1 Overview

This device is a dual 4-channel analog multiplexer. A multiplexer is often used when several signals need to share the same device or resource. This device allows the selection of one of these signals at a time for analysis or propagation.

7.2 Functional Block Diagram

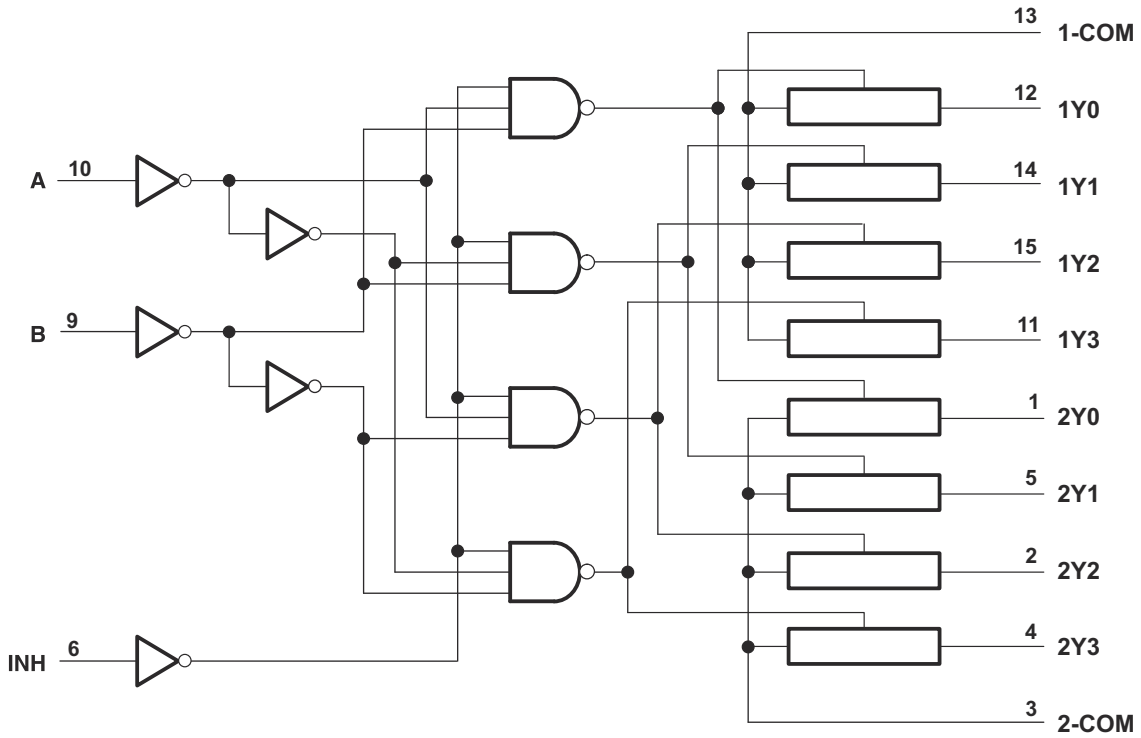

7.3 Feature Description

This device contains 2 separate 4-channel multiplexers for use in a variety of applications. The 4-channel multiplexers can also be configured as demultiplexers by using the COM pins as inputs and the 1Yx or 2Yx pins as outputs. This device is qualified for automotive applications and has an extended temperature range of -40°C to 125°C (maximum depends on package type).

7.4 Device Functional Modes

Table 7-1. Function Table

INPUTS			ON CHANNEL
INH	B	A	
L	L	L	1Y0, 2Y0
L	L	H	1Y1, 2Y1
L	H	L	1Y2, 2Y2
L	H	H	1Y3, 2Y3
H	X	X	None

8 Application and Implementation

Note

Information in the following applications sections is not part of the TI component specification, and TI does not warrant its accuracy or completeness. TI's customers are responsible for determining suitability of components for their purposes, as well as validating and testing their design implementation to confirm system functionality.

8.1 Application Information

A multiplexer is used in applications where multiple signals share a resource. In the following example, several different sensors are connected to the analog-to-digital converter (ADC) of a microcontroller (MCU).

8.2 Typical Application

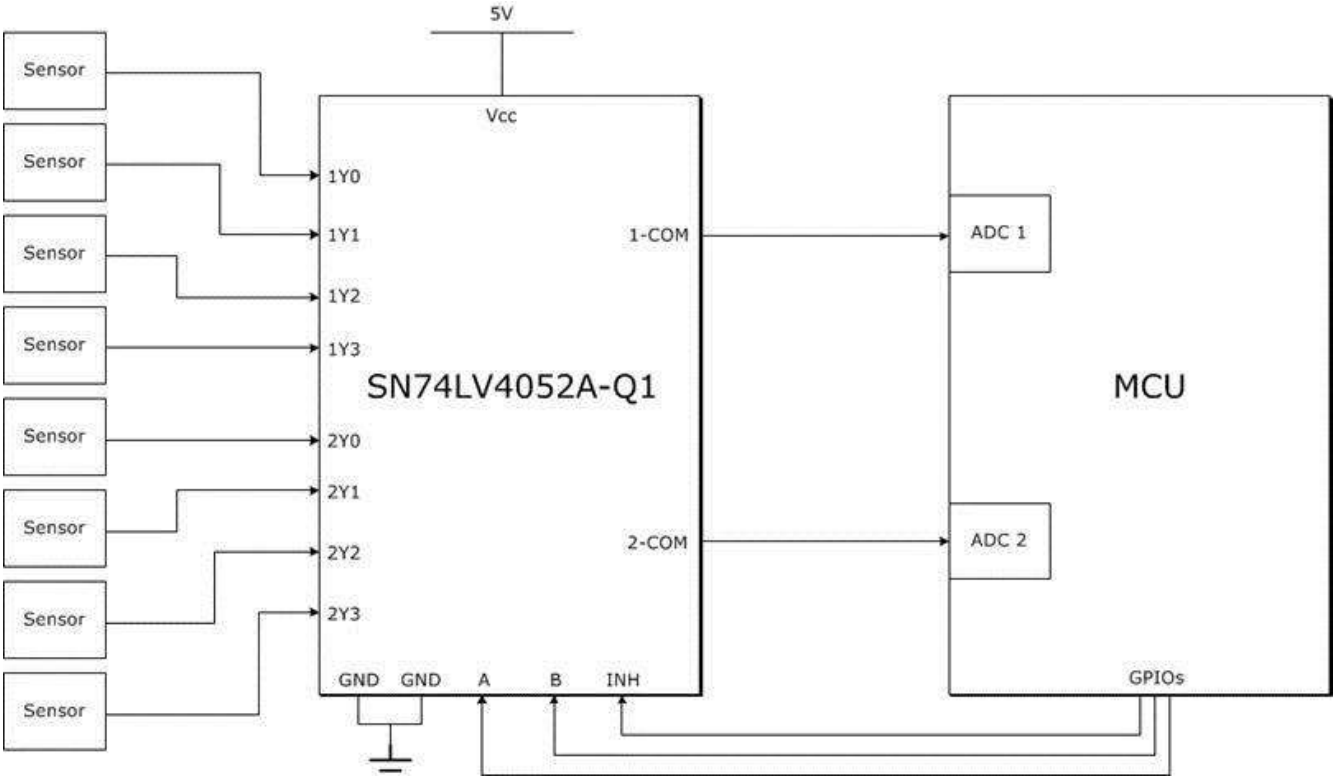

Figure 8-1. Typical Application Schematic

8.2.1 Design Requirements

Processing 8 different analog signals would normally require 8 separate ADCs, but the previous figure shows how to achieve this using only 2 ADCs and 3 GPIOs (general purpose input/outputs).

8.2.2 Detailed Design Procedure

To design with the SN74LV4052A-Q1, a stable input voltage between 2V (see *Recommended Operating Conditions* for details) and 5.5V must be available. The characteristics of the signal that is being multiplexed so that no important information is lost due to timing or voltage level incompatibility with this device is another important design consideration.

Copyright © 2024 Texas Instruments Incorporated

8.3 Power Supply Recommendations

Most systems have a common 3.3V or 5V rail that may be used to supply the V_{CC} pin of this device. If this is not available, then a Switch-Mode-Power-Supply (SMPS) or a Linear Dropout Regulator (LDO) may be used to supply this device from a higher voltage rail.

8.4 Layout

8.4.1 Layout Guidelines

In general, it is best to keep signal lines as short and as straight as possible. Incorporation of microstrip or stripline techniques is also recommended when signal lines are greater than 1 inch in length. These traces must be designed with a characteristic impedance of either 50Ω or 75Ω, as required by the application. Be careful when placing this device too close to high voltage switching components, as they may cause interference.

8.4.2 Layout Example

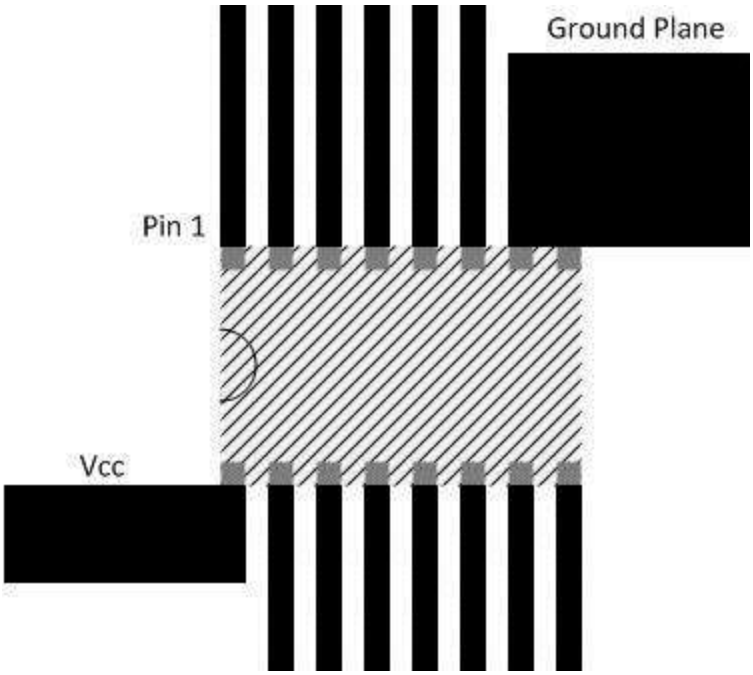

Figure 8-2. Layout Example Schematic

9 Device and Documentation Support

9.1 Receiving Notification of Documentation Updates

To receive notification of documentation updates, navigate to the device product folder on ti.com. Click on *Notifications* to register and receive a weekly digest of any product information that has changed. For change details, review the revision history included in any revised document.

9.2 Support Resources

TI E2E™ support forums are an engineer's go-to source for fast, verified answers and design help — straight from the experts. Search existing answers or ask your own question to get the quick design help you need.

Linked content is provided "AS IS" by the respective contributors. They do not constitute TI specifications and do not necessarily reflect TI's views; see TI's Terms of Use.

9.3 Trademarks

TI E2E™ is a trademark of Texas Instruments.
All trademarks are the property of their respective owners.

9.4 Electrostatic Discharge Caution

This integrated circuit can be damaged by ESD. Texas Instruments recommends that all integrated circuits be handled with appropriate precautions. Failure to observe proper handling and installation procedures can cause damage.

ESD damage can range from subtle performance degradation to complete device failure. Precision integrated circuits may be more susceptible to damage because very small parametric changes could cause the device not to meet its published specifications.

9.5 Glossary

TI Glossary	This glossary lists and explains terms, acronyms, and definitions.

10 Revision History

NOTE: Page numbers for previous revisions may differ from page numbers in the current version.

Changes from Revision I (October 2024) to Revision J (October 2024)	Page
• Removed duplicate Figure 6-9	9

Changes from Revision H (September 2024) to Revision I (October 2024)	Page
• Added 50mA to the Switch IO diode clamp current	4
• Added typical spec for I_{cc} at 25°C	5
• Added typical spec for C_{IS} at 25°C	5

Changes from Revision G (June 2024) to Revision H (September 2024)	Page
• Added DYY package and size	1
• Added DYY package	3

Changes from Revision F (December 2014) to Revision G (June 2024)	Page
• Updated the numbering format for tables, figures, and cross-references throughout the document	1
• Updated the *Package Information* table to include package leads	1
• Added new VIH and VIL Specifications at 1.65V Vcc	5

Copyright © 2024 Texas Instruments Incorporated

11 Mechanical, Packaging, and Orderable Information

The following pages include mechanical, packaging, and orderable information. This information is the most current data available for the designated devices. This data is subject to change without notice and revision of this document. For browser-based versions of this data sheet, refer to the left-hand navigation.

PACKAGING INFORMATION

Orderable part number	Status (1)	Material type (2)	Package | Pins	Package qty | Carrier	RoHS (3)	Lead finish/ Ball material (4)	MSL rating/ Peak reflow (5)	Op temp (°C)	Part marking (6)
CLV4052ATPWRG4Q1	Obsolete	Production	TSSOP (PW) | 16	-	-	Call TI	Call TI	-40 to 105	L4052AQ
SN74LV4052AQDYYRQ1	Active	Production	SOT-23-THIN (DYY) | 16	3000 | LARGE T&R	Yes	NIPDAU	Level-1-260C-UNLIM	-40 to 125	LV4052Q
SN74LV4052AQDYYRQ1.A	Active	Production	SOT-23-THIN (DYY) | 16	3000 | LARGE T&R	Yes	NIPDAU	Level-1-260C-UNLIM	-40 to 125	LV4052Q
SN74LV4052AQPWRQ1	Active	Production	TSSOP (PW) | 16	2000 | LARGE T&R	Yes	NIPDAU	Level-1-260C-UNLIM	-40 to 125	4052AQ1
SN74LV4052AQPWRQ1.A	Active	Production	TSSOP (PW) | 16	2000 | LARGE T&R	Yes	NIPDAU	Level-1-260C-UNLIM	-40 to 125	4052AQ1
SN74LV4052ATDRQ1	NRND	Production	SOIC (D) | 16	2500 | LARGE T&R	Yes	NIPDAU	Level-1-260C-UNLIM	-40 to 105	L4052AQ
SN74LV4052ATDRQ1.A	NRND	Production	SOIC (D) | 16	2500 | LARGE T&R	Yes	NIPDAU	Level-1-260C-UNLIM	-40 to 105	L4052AQ
SN74LV4052ATPWRQ1	Obsolete	Production	TSSOP (PW) | 16	-	-	Call TI	Call TI	-40 to 105	L4052AQ

(1) **Status:** For more details on status, see our product life cycle.

(2) **Material type:** When designated, preproduction parts are prototypes/experimental devices, and are not yet approved or released for full production. Testing and final process, including without limitation quality assurance, reliability performance testing, and/or process qualification, may not yet be complete, and this item is subject to further changes or possible discontinuation. If available for ordering, purchases will be subject to an additional waiver at checkout, and are intended for early internal evaluation purposes only. These items are sold without warranties of any kind.

(3) **RoHS values:** Yes, No, RoHS Exempt. See the TI RoHS Statement for additional information and value definition.

(4) **Lead finish/Ball material:** Parts may have multiple material finish options. Finish options are separated by a vertical ruled line. Lead finish/Ball material values may wrap to two lines if the finish value exceeds the maximum column width.

(5) **MSL rating/Peak reflow:** The moisture sensitivity level ratings and peak solder (reflow) temperatures. In the event that a part has multiple moisture sensitivity ratings, only the lowest level per JEDEC standards is shown. Refer to the shipping label for the actual reflow temperature that will be used to mount the part to the printed circuit board.

(6) **Part marking:** There may be an additional marking, which relates to the logo, the lot trace code information, or the environmental category of the part.

Multiple part markings will be inside parentheses. Only one part marking contained in parentheses and separated by a "~" will appear on a part. If a line is indented then it is a continuation of the previous line and the two combined represent the entire part marking for that device.

Important Information and Disclaimer: The information provided on this page represents TI's knowledge and belief as of the date that it is provided. TI bases its knowledge and belief on information provided by third parties, and makes no representation or warranty as to the accuracy of such information. Efforts are underway to better integrate information from third parties. TI has taken and continues to take reasonable steps to provide representative

and accurate information but may not have conducted destructive testing or chemical analysis on incoming materials and chemicals. TI and TI suppliers consider certain information to be proprietary, and thus CAS numbers and other limited information may not be available for release.

In no event shall TI's liability arising out of such information exceed the total purchase price of the TI part(s) at issue in this document sold by TI to Customer on an annual basis.

OTHER QUALIFIED VERSIONS OF SN74LV4052A-Q1 :

- Catalog : SN74LV4052A
- Enhanced Product : SN74LV4052A-EP

NOTE: Qualified Version Definitions:

- Catalog - TI's standard catalog product
- Enhanced Product - Supports Defense, Aerospace and Medical Applications

TAPE AND REEL INFORMATION

REEL DIMENSIONS

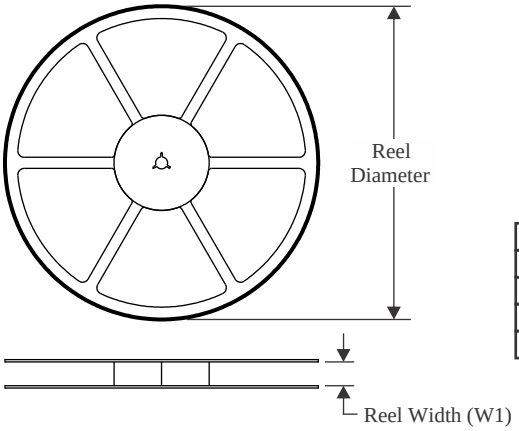

TAPE DIMENSIONS

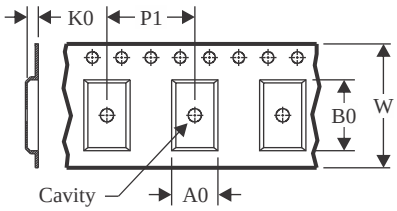

A0	Dimension designed to accommodate the component width
B0	Dimension designed to accommodate the component length
K0	Dimension designed to accommodate the component thickness
W	Overall width of the carrier tape
P1	Pitch between successive cavity centers

QUADRANT ASSIGNMENTS FOR PIN 1 ORIENTATION IN TAPE

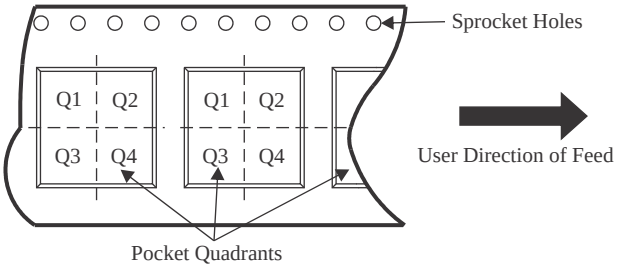

*All dimensions are nominal

Device	Package Type	Package Drawing	Pins	SPQ	Reel Diameter (mm)	Reel Width W1 (mm)	A0 (mm)	B0 (mm)	K0 (mm)	P1 (mm)	W (mm)	Pin1 Quadrant
SN74LV4052AQDYYRQ1	SOT-23-THIN	DYY	16	3000	330.0	12.4	4.8	3.6	1.6	8.0	12.0	Q3
SN74LV4052AQPWRQ1	TSSOP	PW	16	2000	330.0	12.4	6.9	5.6	1.6	8.0	12.0	Q1
SN74LV4052AQPWRQ1	TSSOP	PW	16	2000	330.0	12.4	6.9	5.6	1.6	8.0	12.0	Q1

TAPE AND REEL BOX DIMENSIONS

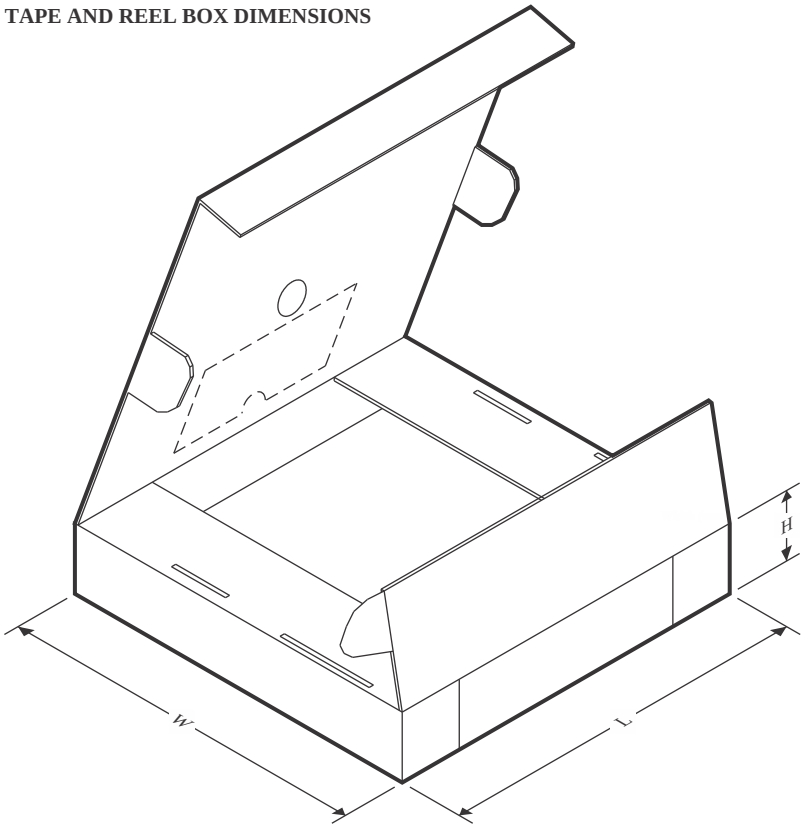

*All dimensions are nominal

Device	Package Type	Package Drawing	Pins	SPQ	Length (mm)	Width (mm)	Height (mm)
SN74LV4052AQDYYRQ1	SOT-23-THIN	DYY	16	3000	336.6	336.6	31.8
SN74LV4052AQPWRQ1	TSSOP	PW	16	2000	353.0	353.0	32.0
SN74LV4052AQPWRQ1	TSSOP	PW	16	2000	356.0	356.0	35.0

D (R–PDSO–G16) PLASTIC SMALL OUTLINE

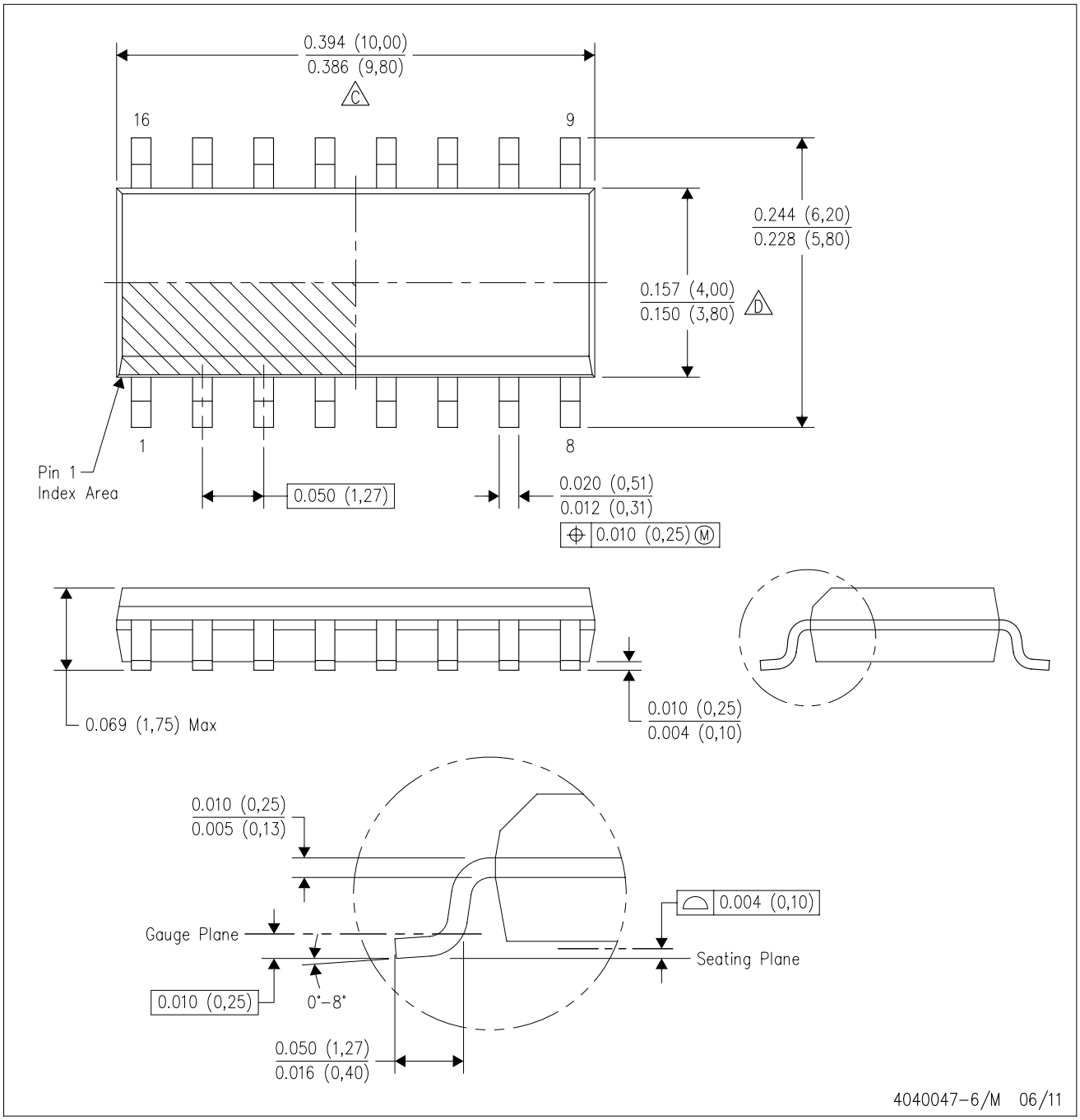

NOTES:
A. All linear dimensions are in inches (millimeters).
B. This drawing is subject to change without notice.
C. Body length does not include mold flash, protrusions, or gate burrs. Mold flash, protrusions, or gate burrs shall not exceed 0.006 (0,15) each side.
D. Body width does not include interlead flash. Interlead flash shall not exceed 0.017 (0,43) each side.
E. Reference JEDEC MS–012 variation AC.

PW0016A

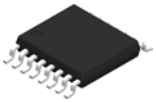

PACKAGE OUTLINE

TSSOP - 1.2 mm max height

SMALL OUTLINE PACKAGE

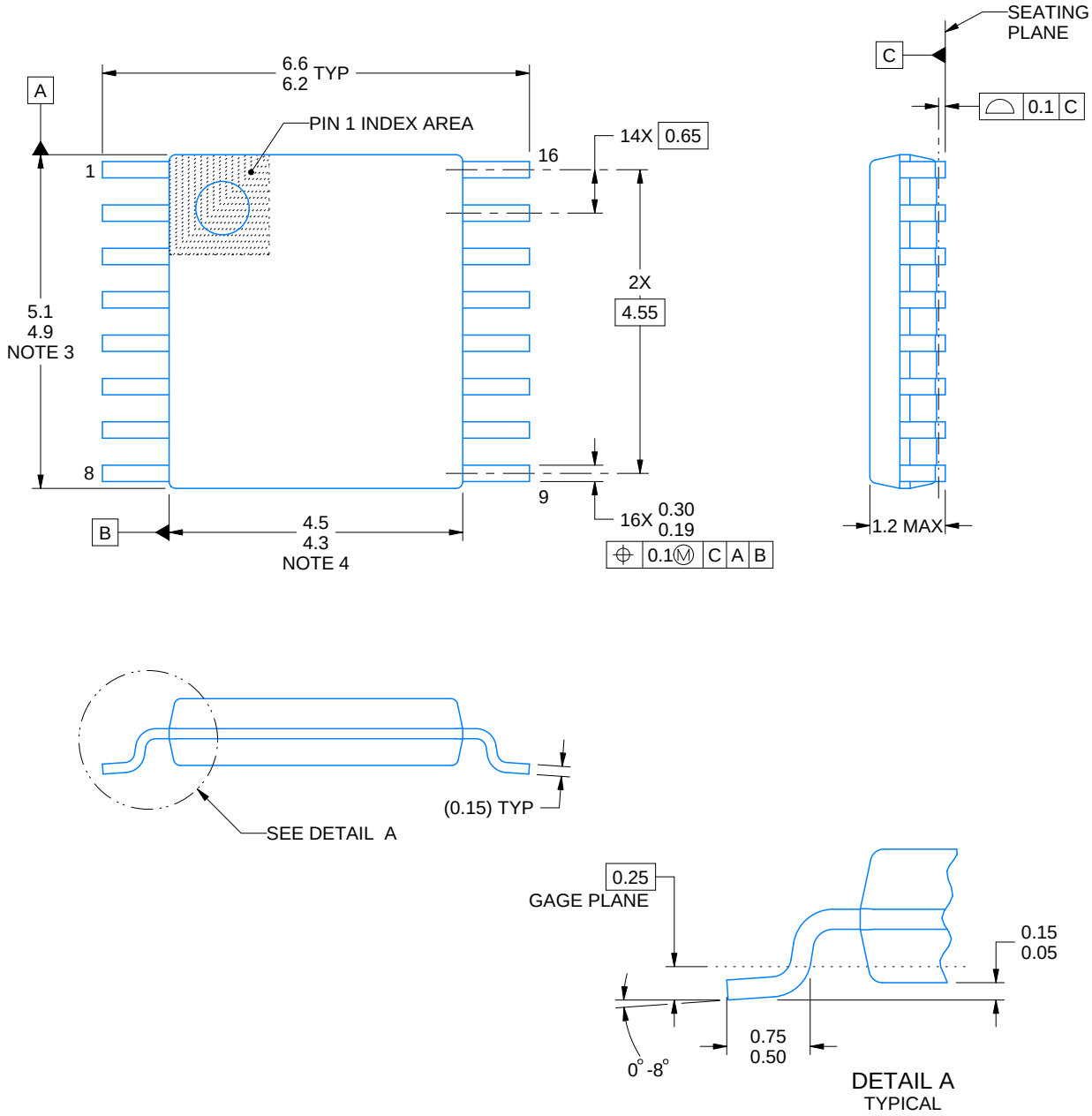

NOTES:

1. All linear dimensions are in millimeters. Any dimensions in parenthesis are for reference only. Dimensioning and tolerancing per ASME Y14.5M.
2. This drawing is subject to change without notice.
3. This dimension does not include mold flash, protrusions, or gate burrs. Mold flash, protrusions, or gate burrs shall not exceed 0.15 mm per side.
4. This dimension does not include interlead flash. Interlead flash shall not exceed 0.25 mm per side.
5. Reference JEDEC registration MO-153.

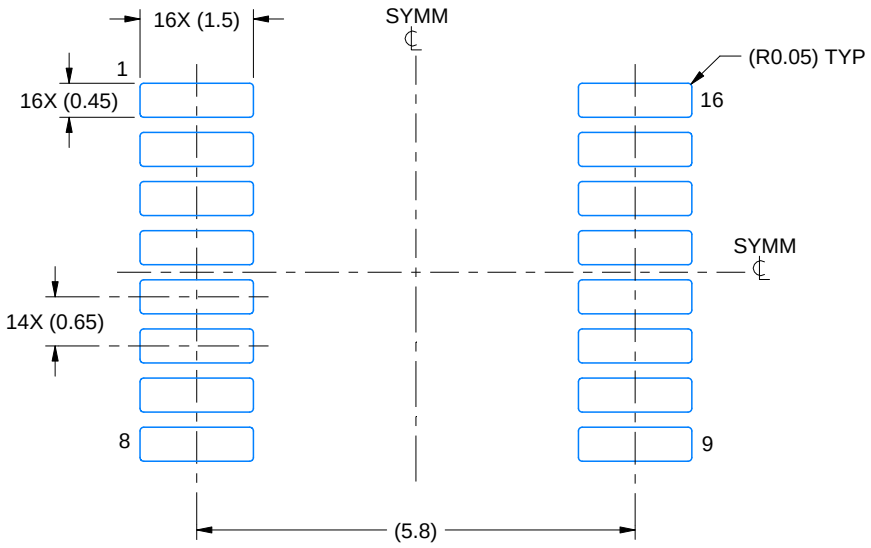

LAND PATTERN EXAMPLE
EXPOSED METAL SHOWN
SCALE: 10X

NON-SOLDER MASK DEFINED (PREFERRED)

SOLDER MASK DEFINED

SOLDER MASK DETAILS

4220204/A 02/2017

NOTES: (continued)

6. Publication IPC-7351 may have alternate designs.
7. Solder mask tolerances between and around signal pads can vary based on board fabrication site.

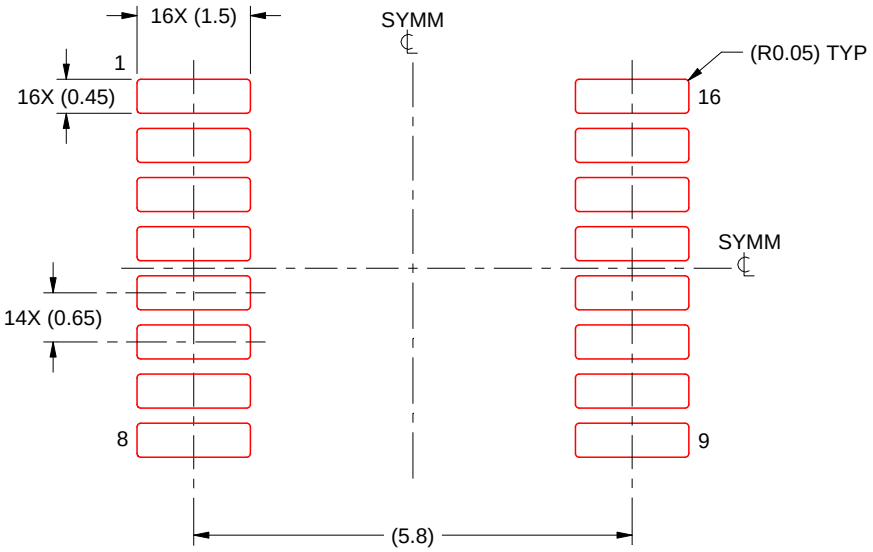

SOLDER PASTE EXAMPLE
BASED ON 0.125 mm THICK STENCIL
SCALE: 10X

4220204/A 02/2017

NOTES: (continued)

8. Laser cutting apertures with trapezoidal walls and rounded corners may offer better paste release. IPC-7525 may have alternate design recommendations.
9. Board assembly site may have different recommendations for stencil design.

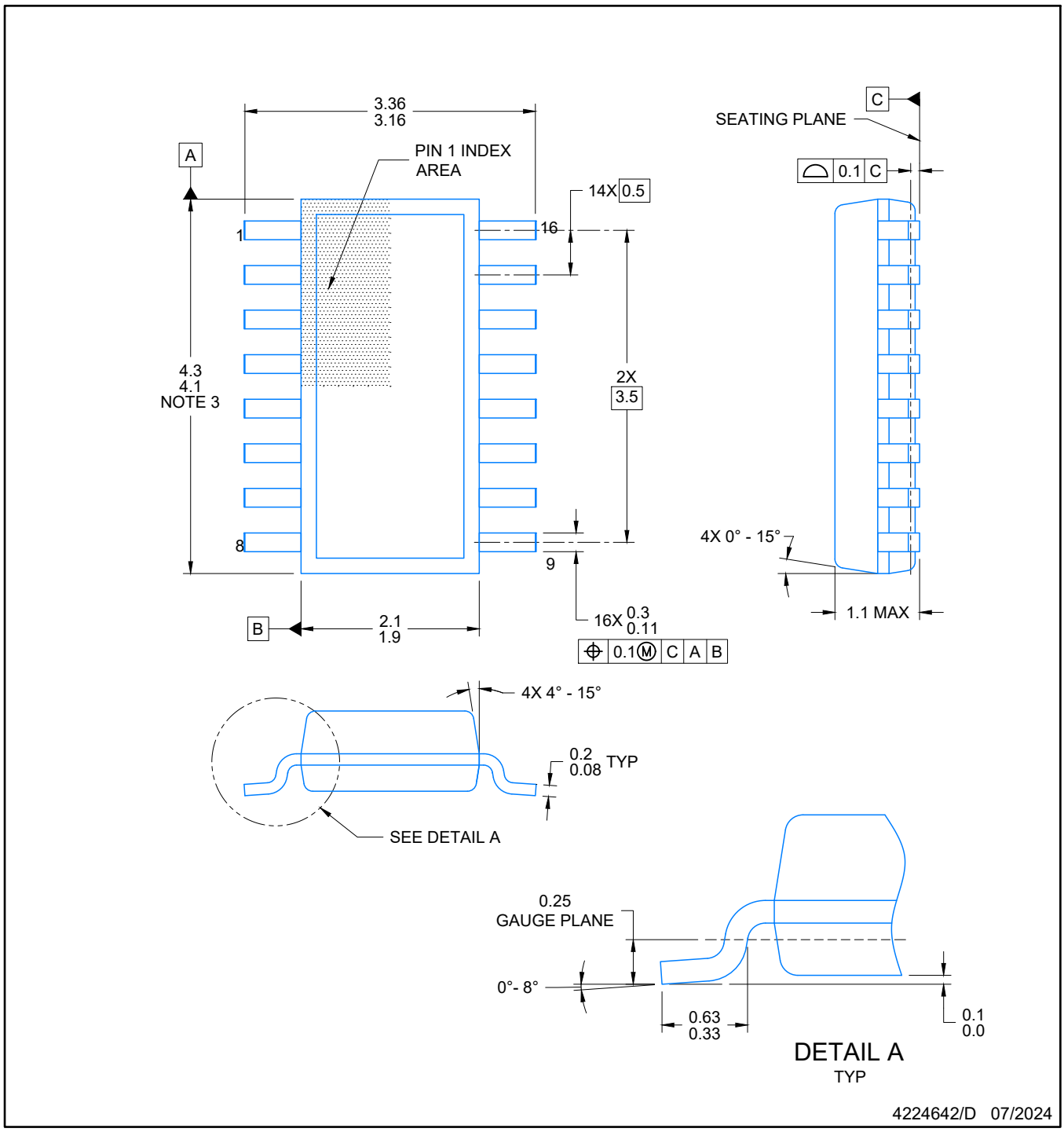

NOTES:

1. All linear dimensions are in millimeters. Any dimensions in parenthesis are for reference only. Dimensioning and tolerancing per ASME Y14.5M.
2. This drawing is subject to change without notice.
3. This dimension does not include mold flash, protrusions, or gate burrs. Mold flash, protrusions, or gate burrs shall not exceed 0.15 per side.
4. This dimension does not include interlead flash. Interlead flash shall not exceed 0.50 per side.
5. Reference JEDEC Registration MO-345, Variation AA

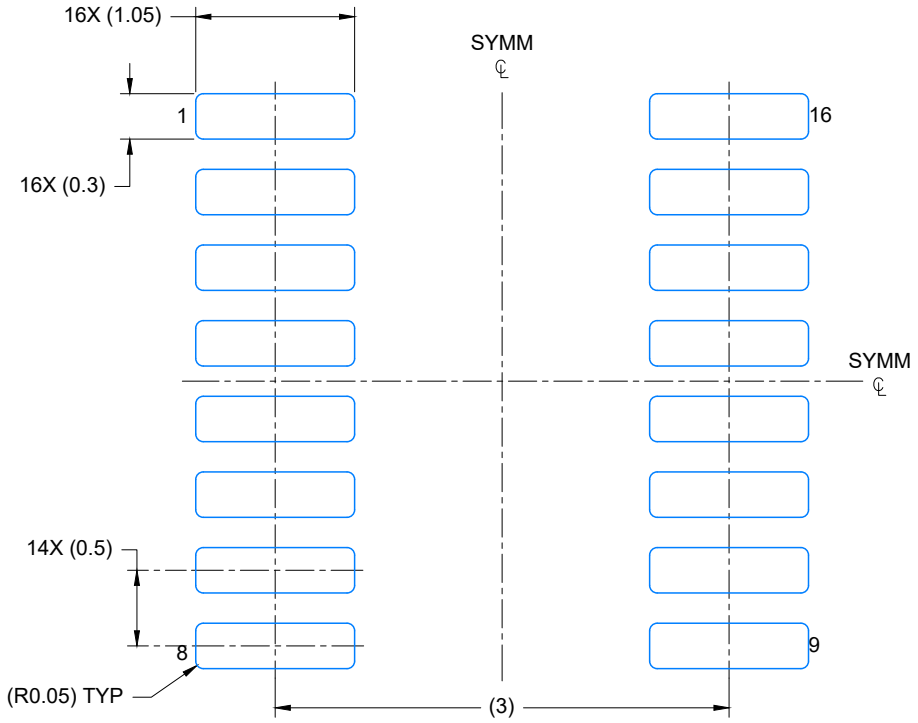

LAND PATTERN EXAMPLE
EXPOSED METAL SHOWN
SCALE: 20X

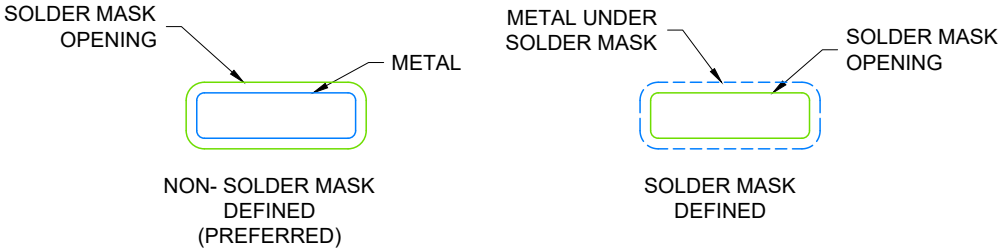

SOLDER MASK DETAILS

4224642/D 07/2024

NOTES: (continued)

6. Publication IPC-7351 may have alternate designs.
7. Solder mask tolerances between and around signal pads can vary based on board fabrication site.

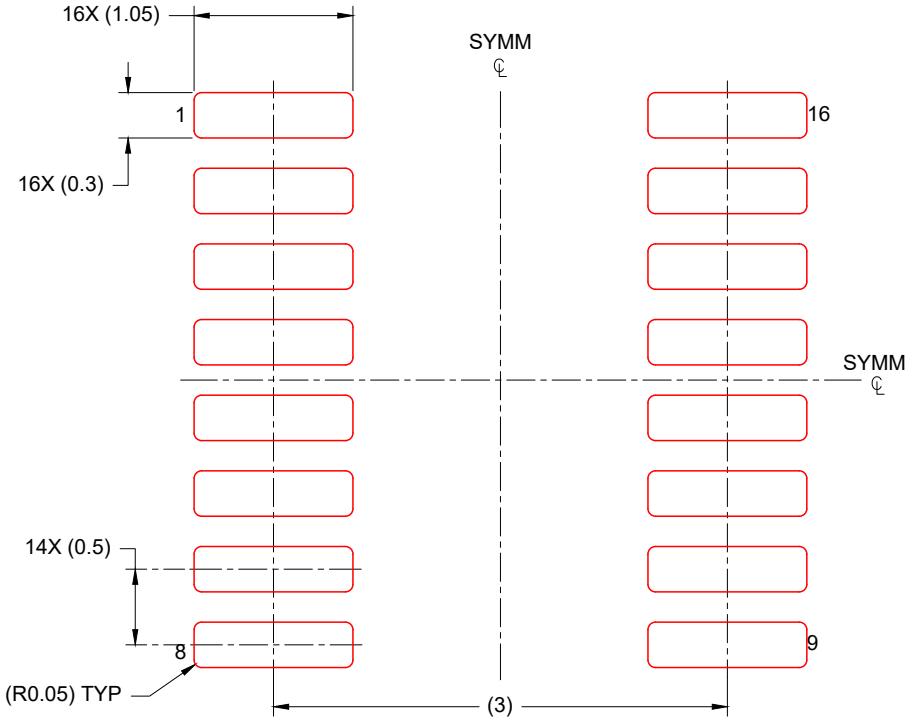

SOLDER PASTE EXAMPLE
BASED ON 0.125 mm THICK STENCIL
SCALE: 20X

4224642/D 07/2024

NOTES: (continued)

8. Laser cutting apertures with trapezoidal walls and rounded corners may offer better paste release. IPC-7525 may have alternate design recommendations.
9. Board assembly site may have different recommendations for stencil design.

IMPORTANT NOTICE AND DISCLAIMER

TI PROVIDES TECHNICAL AND RELIABILITY DATA (INCLUDING DATA SHEETS), DESIGN RESOURCES (INCLUDING REFERENCE DESIGNS), APPLICATION OR OTHER DESIGN ADVICE, WEB TOOLS, SAFETY INFORMATION, AND OTHER RESOURCES “AS IS” AND WITH ALL FAULTS, AND DISCLAIMS ALL WARRANTIES, EXPRESS AND IMPLIED, INCLUDING WITHOUT LIMITATION ANY IMPLIED WARRANTIES OF MERCHANTABILITY, FITNESS FOR A PARTICULAR PURPOSE OR NON-INFRINGEMENT OF THIRD PARTY INTELLECTUAL PROPERTY RIGHTS.

These resources are intended for skilled developers designing with TI products. You are solely responsible for (1) selecting the appropriate TI products for your application, (2) designing, validating and testing your application, and (3) ensuring your application meets applicable standards, and any other safety, security, regulatory or other requirements.

These resources are subject to change without notice. TI grants you permission to use these resources only for development of an application that uses the TI products described in the resource. Other reproduction and display of these resources is prohibited. No license is granted to any other TI intellectual property right or to any third party intellectual property right. TI disclaims responsibility for, and you will fully indemnify TI and its representatives against, any claims, damages, costs, losses, and liabilities arising out of your use of these resources.

TI’s products are provided subject to TI’s Terms of Sale or other applicable terms available either on ti.com or provided in conjunction with such TI products. TI’s provision of these resources does not expand or otherwise alter TI’s applicable warranties or warranty disclaimers for TI products.

TI objects to and rejects any additional or different terms you may have proposed.

Mailing Address: Texas Instruments, Post Office Box 655303, Dallas, Texas 75265
Copyright © 2025, Texas Instruments Incorporated