TPS6206x 3-MHz, 2-A, Step-Down Converter in 2-mm × 2-mm SON Package

1 Features

- 3-MHz Switching Frequency
- V_{IN} Range from 2.9 V to 6 V
- Up to 97% Efficiency
- Power Save Mode / 3-MHz Fixed PWM Mode
- Power Good Output
- Output Voltage Accuracy in PWM Mode ±1.5%
- Output Capacitor Discharge Function
- Typical 18 µA Quiescent Current
- 100% Duty Cycle for Lowest Dropout
- Voltage Positioning
- Clock Dithering
- -40°C to 125°C Operating Junction Temperature
- Supports Maximum 1-mm Height Solutions
- Available in a 2 mm x 2 mm x 0.75 mm WSON

2 Applications

- Point of Load (POL)
- Notebooks, Pocket PCs
- Portable Media Players
- DSP Supply

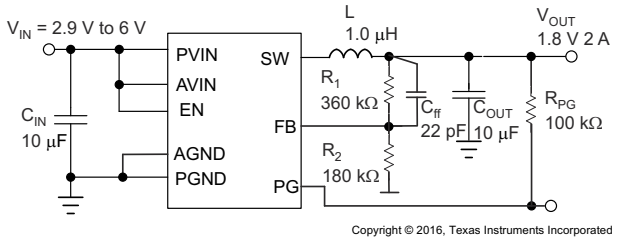

Typical Application Schematic

3 Description

The TPS6206x is a family of highly efficient synchronous step down DC/DC converters. They provide up to 2-A output current.

With an input voltage range of 2.9 V to 6 V, the device is a perfect fit for power conversion from a 5-V or 3.3-V system supply rail. The TPS6206x operates at 3-MHz fixed frequency and enters power save mode operation at light load currents to maintain high efficiency over the entire load current range. The power save mode is optimized for low output voltage ripple. For low noise applications, TPS62065 can be forced into fixed frequency PWM mode by pulling the MODE pin high. TPS62067 provides an open drain power good output.

In the shutdown mode, the current consumption is reduced to less than 1 µA and an internal circuit discharges the output capacitor.

TPS6206x family is optimized for operation with a tiny 1 µH inductor and a small 10-µF output capacitor to achieve smallest solution size and high regulation performance.

It is available in a small 2-mm × 2-mm × 0.75-mm 8-pin WSON package.

Device Information

PART NUMBER	PACKAGE (1)	BODY SIZE (NOM)
TPS62065 TPS62067	WSON (8)	2.00 mm × 2.00 mm

(1) For all available packages, see the orderable addendum at the end of the data sheet.

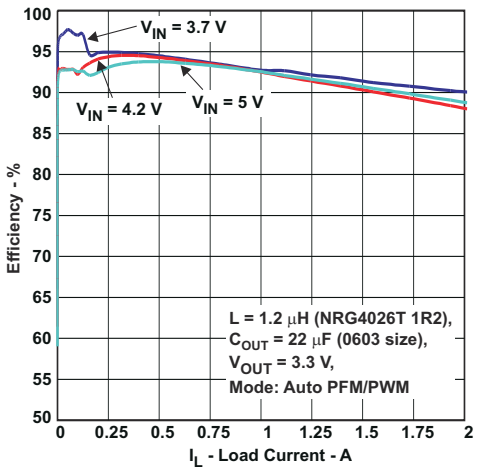

Efficiency vs Load Current

An IMPORTANT NOTICE at the end of this data sheet addresses availability, warranty, changes, use in safety-critical applications, intellectual property matters and other important disclaimers. PRODUCTION DATA.

Table of Contents

1 Features....1
2 Applications....1
3 Description....1
4 Revision History....2
5 Device Comparison Table....3
6 Pin Configuration and Functions....3
7 Specifications....4
7.1 Absolute Maximum Ratings....4
7.2 ESD Ratings....4
7.3 Recommended Operating Conditions....4
7.4 Thermal Information....4
7.5 Electrical Characteristics....5
7.6 Typical Characteristics....6
8 Detailed Description....7
8.1 Overview....7
8.2 Functional Block Diagram....7
8.3 Feature Description....8
8.4 Device Functional Modes....9
9 Application and Implementation....12
9.1 Application Information....12
9.2 Typical Application....12
9.3 System Example....18
10 Power Supply Recommendations....19
11 Layout....19
11.1 Layout Guidelines....19
11.2 Layout Example....19
12 Device and Documentation Support....20
12.1 Device Support....20
12.2 Related Links....20
12.3 Receiving Notification of Documentation Updates....20
12.4 Support Resources....20
12.5 Trademarks....20
12.6 Electrostatic Discharge Caution....20
12.7 Glossary....20
13 Mechanical, Packaging, and Orderable Information....20

4 Revision History

NOTE: Page numbers for previous revisions may differ from page numbers in the current version.

Changes from Revision D (November 2016) to Revision E (October 2020) — **Page**

- Updated the numbering format for tables, figures and cross-references throughout the document....1

Changes from Revision C (September 2015) to Revision D (November 2016) — **Page**

- Changed the conditions statement for *Section 7.5*....5
- Added Note 1 to the Test conditions of I_{SD}, I_{IN}, and I_{LKG} in *Section 7.5*....5
- Changed temperature values From: T_A To: T_J in Figure 7-1 and Figure 7-3....6

Changes from Revision B (November 2013) to Revision C (September 2015) — **Page**

- Added *Pin Configuration and Functions* section, *ESD Ratings* table, *Feature Description* section, *Device Functional Modes*, *Application and Implementation* section, *Power Supply Recommendations* section, *Layout* section, *Device and Documentation Support* section, and *Mechanical, Packaging, and Orderable Information* section....1

Changes from Revision A (May 2010) to Revision B (November 2013) — **Page**

- Added Thermal Information table and deleted Dissipation Ratings table....4

Changes from Revision * (March 2010) to Revision A () — **Page**

- Changed V_{IN} Range from "3V to 6V" to "2.9V to 6V", throughout....1
- Added equation to "Output Voltage Setting" section....12
- Changed equation for calculating $f_{z.}$....12
- Changed equation for calculating $C_{ff.}$....12

Copyright © 2020 Texas Instruments Incorporated

5 Device Comparison Table

PART NUMBER (2)	OUTPUT VOLTAGE(1)	FUNCTION		MAXIMUM OUTPUT CURRENT
		MODE	POWER GOOD (PG)	
TPS62065	Adjustable	Selectable	No	2 A
TPS62067	Adjustable	Auto PWM/PFM	Yes	2 A

(1) Contact TI for other fixed output voltage options
(2) For the most current package and ordering information, see *Section 13* at the end of this document, or see the TI website at www.ti.com.

6 Pin Configuration and Functions

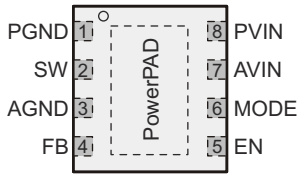

Figure 6-1. DSG Package 8-Pin WSON Top View

Table 6-1. Pin Functions

PIN		I/O	DESCRIPTION
NAME	NO.		
AGND	3	I	Analog GND supply pin for the control circuit.
AVIN	7	I	Analog V_{IN} power supply for the control circuit. Must be connected to PVIN and input capacitor.
EN	5	I	This is the enable pin of the device. Pulling this pin to low forces the device into shutdown mode. Pulling this pin to high enables the device. This pin must be terminated
FB	4	I	Feedback pin for the internal regulation loop. Connect the external resistor divider to this pin. In case of fixed output voltage option, connect this pin directly to the output capacitor
MODE	6	I	**MODE**: MODE pin = High forces the device to operate in fixed frequency PWM mode. MODE pin = Low enables the power save mode with automatic transition from PFM mode to fixed frequency PWM mode. This pin must be terminated.
PG		Open-Drain	**PG**: Power Good Open-Drain output. Connect an external pullup resistor to a rail which is below or equal AV_{IN}.
PGND	1	PWR	GND supply pin for the output stage.
PowerPAD™	—	—	For good thermal performance, this PAD must be soldered to the land pattern on the PCB. This PAD should be used as device GND.
PVIN	8	PWR	V_{IN} power supply pin for the output stage.
SW	2	O	This is the switch pin and is connected to the internal MOSFET switches. Connect the external inductor between this terminal and the output capacitor.

Copyright © 2020 Texas Instruments Incorporated

7 Specifications

7.1 Absolute Maximum Ratings

Over operating free-air temperature range (unless otherwise noted) [1]

		MIN	MAX	UNIT
Voltage[2]	AVIN, PVIN	–0.3	7	V
	EN, MODE, PG, FB	–0.3	V_{IN} +0.3 < 7	
	SW	–0.3	7	
Current (sink)	into PG		1	mA
Current (source)	Peak output	Internally limited		A
Temperature	T_J	–40	125	°C
	T_{stg}	–65	150	°C

(1) Stresses beyond those listed under *Absolute Maximum Ratings* may cause permanent damage to the device. These are stress ratings only and functional operation of the device at these or any other conditions beyond those indicated under *Recommended Operating Conditions* is not implied. Exposure to absolute-maximum-rated conditions for extended periods may affect device reliability.
(2) All voltage values are with respect to network ground terminal.

7.2 ESD Ratings

		VALUE	UNIT
$V_{(ESD)}$ Electrostatic discharge	Human body model (HBM), per ANSI/ESDA/JEDEC JS-001[1]	±2000	V
	Charged-device model (CDM), per JEDEC specification JESD22-C101[2]	±1000	

(1) JEDEC document JEP155 states that 500-V HBM allows safe manufacturing with a standard ESD control process.
(2) JEDEC document JEP157 states that 250-V CDM allows safe manufacturing with a standard ESD control process.

7.3 Recommended Operating Conditions

		MIN	NOM	MAX	UNIT
AV_{IN} , PV_{IN}	Supply voltage	2.9		6	V
	Output current capability			2000	mA
	Output voltage range for adjustable voltage	0.8		V_{IN}	V
L	Effective inductance	0.7	1	1.6	µH
C_{OUT}	Effective output capacitance	4.5	10	22	µF
T_J	Operating junction temperature	–40		125	°C

7.4 Thermal Information

THERMAL METRIC[1]		TPS62065 TPS62067 DSG (WSON) 8 PINS	UNIT
$R_{\theta JA}$	Junction-to-ambient thermal resistance	65.3	°C/W
$R_{\theta JC(top)}$	Junction-to-case (top) thermal resistance	74.2	°C/W
$R_{\theta JB}$	Junction-to-board thermal resistance	35.4	°C/W
ψ_{JT}	Junction-to-top characterization parameter	2.2	°C/W
ψ_{JB}	Junction-to-board characterization parameter	36	°C/W
$R_{\theta JC(bot)}$	Junction-to-case (bottom) thermal resistance	12.8	°C/W

(1) For more information about traditional and new thermal metrics, see the *Semiconductor and IC Package Thermal Metrics* application report.

Copyright © 2020 Texas Instruments Incorporated

7.5 Electrical Characteristics

T_J = -40°C to 125°C, typical values are at T_A = 25°C. Unless otherwise noted, specifications apply for condition V_{IN} = EN = 3.6 V. External components C_{IN} = 10 µF 0603, C_{OUT} = 10 µF 0603, L = 1 µH, see the parameter measurement information.

PARAMETER		TEST CONDITIONS	MIN	TYP	MAX	UNIT
SUPPLY						
V_{IN}	Input voltage range		2.9		6	V
I_Q	Operating quiescent current	I_{OUT} = 0 mA, device operating in PFM mode and device not switching		18		µA
I_{SD}	Shutdown current	EN = GND, current into AVIN and PVIN(1)		0.1	1	µA
V_{UVLO}	Undervoltage lockout threshold	Falling	1.73	1.78	1.83	V
		Rising	1.9	1.95	1.99	
ENABLE, MODE						
V_{IH}	High level input voltage	2.9 V ≤ V_{IN} ≤ 6 V	1		6	V
V_{IL}	Low level input voltage	2.9 V ≤ V_{IN} ≤ 6 V	0		0.4	V
I_{IN}	Input bias current	EN, mode tied to GND or AVIN(1)		0.01	1	µA
POWER GOOD OPEN-DRAIN OUTPUT						
V_{THPG}	Power good threshold voltage	Rising feedback voltage	93%	95%	98%	
		Falling feedback voltage	87%	90%	92%	
V_{OL}	Output low voltage	I_{OUT} = –1mA; must be limited by external pullup resistor (1)			0.3	V
V_H	Output high voltage	Voltage applied to PG pin through external pullup resistor			V_{IN}	V
I_{LKG}	Leakage current into PG pin	$V_{(PG)}$ = 3.6V(1)			100	nA
t_{PGDL}	Internal power good delay time			5		µs
POWER SWITCH						
$R_{DS(on)}$	High-side MOSFET on-resistance	V_{IN} = 3.6 V (1)		120	180	mΩ
		V_{IN} = 5 V(1)		95	150	
$R_{DS(on)}$	Low-side MOSFET on-resistance	V_{IN} = 3.6 V(1)		90	130	mΩ
		V_{IN} = 5 V(1)		75	100	
I_{LIMF}	Forward current limit MOSFET high-side and low-side	2.9 V ≤ V_{IN} ≤ 6 V	2300	2750	3300	mA
T_{SD}	Thermal shutdown	Increasing junction temperature		150		°C
	Thermal shutdown hysteresis	Decreasing junction temperature		10		
OSCILLATOR						
f_{SW}	Oscillator frequency	2.9 V ≤ V_{IN} ≤ 6 V	2.6	3	3.4	MHz
OUTPUT						
V_{ref}	Reference voltage			600		mV
$V_{FB(PWM)}$	Feedback voltage PWM mode	PWM operation, MODE = V_{IN} , 2.9 V ≤ V_{IN} ≤ 6 V, 0 mA load	–1.5%	0%	1.5%	
$V_{FB(PFM)}$	Feedback voltage PFM mode, voltage positioning	device in PFM mode, voltage positioning active(2)		1%		
V_{FB}	Load regulation			–0.5		%/A
	Line regulation			0		%/V
$R_{(Discharge)}$	Internal discharge resistor	Activated with EN = GND, 2.9 V ≤ V_{IN} ≤ 6 V, 0.8 ≤ V_{OUT} ≤ 3.6 V	75	200	1450	Ω
t_{START}	Start-up time	Time from active EN to reach 95% of V_{OUT}		500		µs

(1) Maximum value applies for T_J = 85°C
(2) In PFM mode, the internal reference voltage is set to typ. 1.01 × V_{ref}. See the parameter measurement information.

7.6 Typical Characteristics

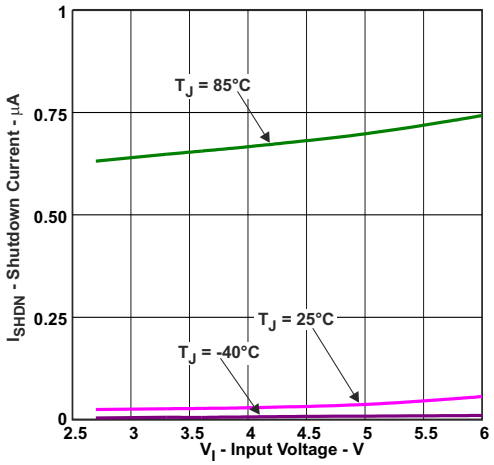

Figure 7-1. Shutdown Current vs Input Voltage and Ambient Temperature

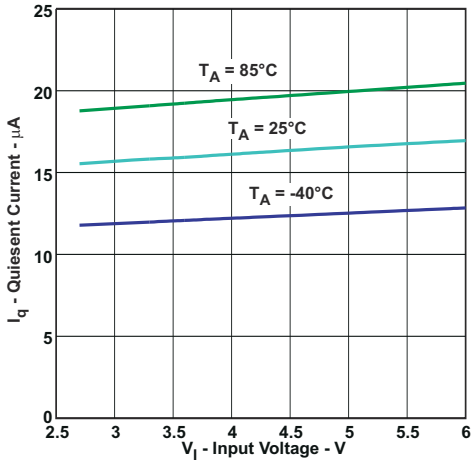

Figure 7-2. Quiescent Current vs Input Voltage

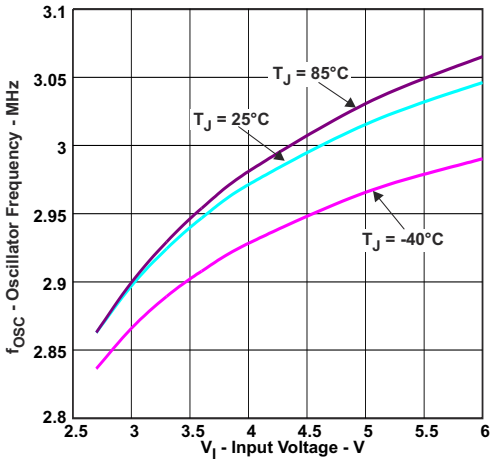

Figure 7-3. Oscillator Frequency vs Input Voltage

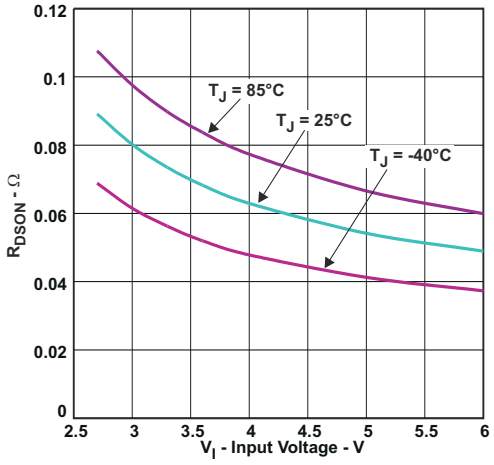

Figure 7-4. R_{DSON} Low-Side Switch

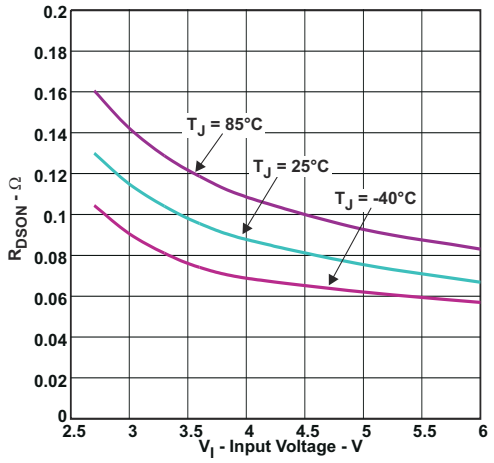

Figure 7-5. R_{DSON} High-Side Switch

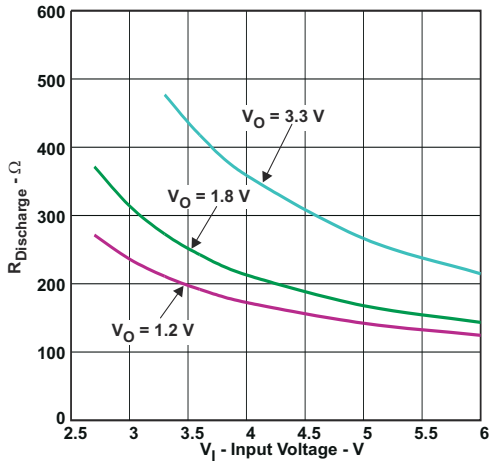

Figure 7-6. $R_{discharge}$ vs Input Voltage

Copyright © 2020 Texas Instruments Incorporated

8 Detailed Description

8.1 Overview

The TPS6206x step down converter operates with typically 3-MHz fixed frequency pulse width modulation (PWM) at moderate to heavy load currents. At light load currents the converter can automatically enter power save mode and operates then in pulse frequency modulation (PFM) mode.

During PWM operation the converter use a unique fast response voltage mode controller scheme with input voltage feed-forward to achieve good line and load regulation allowing the use of small ceramic input and output capacitors. At the beginning of each clock cycle initiated by the clock signal, the high-side MOSFET switch is turned on. The current flows now from the input capacitor through the high-side MOSFET switch through the inductor to the output capacitor and load. During this phase, the current ramps up until the PWM comparator trips and the control logic will turn off the switch. The current limit comparator will also turn off the switch in case the current limit of the high-side MOSFET switch is exceeded. After a dead time preventing shoot through current, the low-side MOSFET rectifier is turned on and the inductor current ramps down. The current flows now from the inductor to the output capacitor and to the load. It returns back to the inductor through the low-side MOSFET rectifier..

The next cycle will be initiated by the clock signal again turning off the low-side MOSFET rectifier and turning on the high-side MOSFET switch.

8.2 Functional Block Diagram

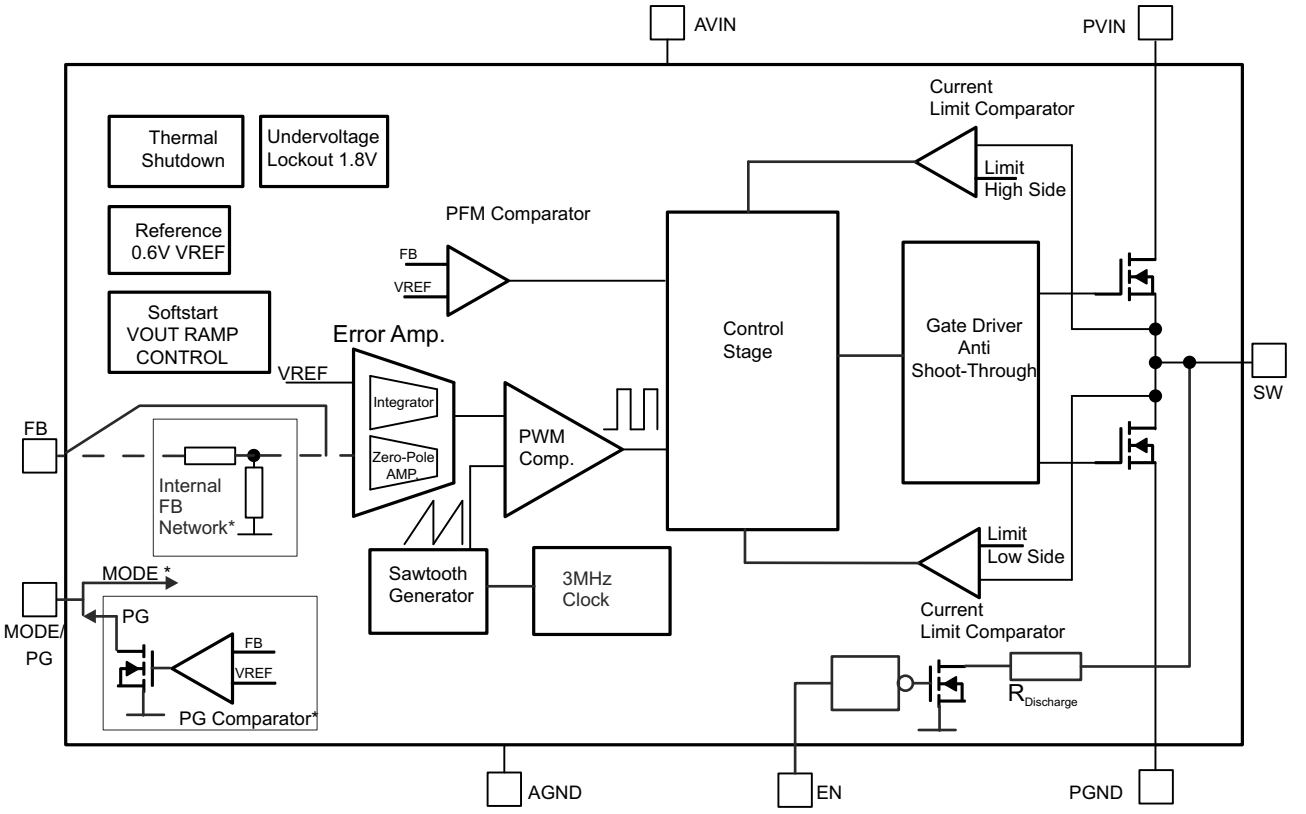

Copyright © 2016, Texas Instruments Incorporated

* Function depends on device option

8.3 Feature Description

8.3.1 Mode Selection (TPS62065)

The MODE pin allows mode selection between forced PWM mode and power save mode.

Connecting this pin to GND enables the power save mode with automatic transition between PWM and PFM mode. Pulling the MODE pin high forces the converter to operate in fixed frequency PWM mode even at light load currents. This allows simple filtering of the switching frequency for noise sensitive applications. In this mode, the efficiency is lower compared to the power save mode during light loads.

The condition of the MODE pin can be changed during operation and allows efficient power management by adjusting the operation mode of the converter to the specific system requirements.

In device options where the MODE pin is replaced with power good output, the power save mode is enabled per default.

8.3.2 Power Good Output (TPS62067)

This function is available in the TPS62067. The power good output is an open-drain output and requires an external pullup resistor. The circuit is active once the device is enabled and AVIN is above the undervoltage lockout threshold V_{UVLO}. It is driven by an internal comparator connected to the FB voltage. The PG output provides a high level once the feedback voltage exceeds typically 95% of its nominal value. The PG output is driven to low level once the feedback voltage falls below typically 90% of its nominal value. The PG output is activated with an internal delay of 5 µs.

The PG open-drain output transistor is turned on immediately with EN = Low level and pulls the output low. The external pullup resistor can be connected to any voltage rail lower or equal the voltage applied to AVIN of the device. The value of the pullup resistor must be carefully selected to limit the current into the PG pin to maximum 1 mA. The external pullup resistor can be connected to VOUT or another voltage rail which does not exceed the V_{IN} level. The current flowing through the pullup resistor impacts the current consumption of the application circuit in shutdown mode.

The shutdown current of the device does not include the current through the external pullup and internal open-drain stage. The PG signal can be used for sequencing various converters or to reset a microcontroller.

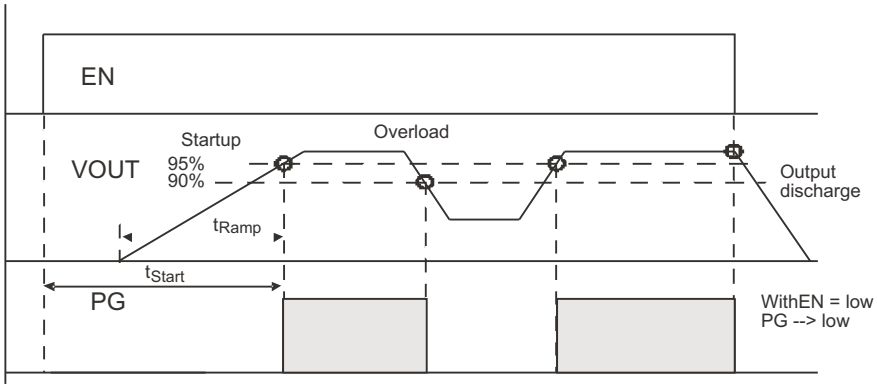

Figure 8-1. Power Good Output Pg

8.3.3 Enable

The device is enabled by setting EN pin to high. At first, the internal reference is activated and the internal analog circuits are settled. Afterwards, the soft start is activated and the output voltage is ramped up. The output voltages reaches 95% of its nominal value within t_{START} of typically 500 µs after the device has been enabled. The EN input can be used to control power sequencing in a system with various DC/DC converters. The EN pin can be connected to the output of another converter, to drive the EN pin high and getting a sequencing of supply rails. With EN = GND, the device enters shutdown mode. In this mode, all circuits are disabled and the SW pin is connected to PGND through an internal resistor to discharge the output.

Copyright © 2020 Texas Instruments Incorporated

8.3.4 Clock Dithering

To reduce the noise level of switch frequency harmonics in the higher RF bands, the TPS6206x family has a built-in clock-dithering circuit. The oscillator frequency is slightly modulated with a sub clock causing a clock dither of typically 6 ns.

8.3.5 Undervoltage Lockout

The undervoltage lockout circuit prevents the device from malfunctioning at low input voltages and from excessive discharge of the battery. It disables the output stage of the converter once the falling V_{IN} trips the undervoltage lockout threshold V_{UVLO}. The undervoltage lockout threshold V_{UVLO} for falling V_{IN} is typically 1.78 V. The device starts operation once the rising V_{IN} trips undervoltage lockout threshold V_{UVLO} again at typically 1.95 V.

8.3.6 Thermal Shutdown

As soon as the junction temperature, T_J, exceeds 150°C (typical) the device goes into thermal shutdown. In this mode, the high-side and low-side MOSFETs are turned off. The device continues its operation with a soft start once the junction temperature falls below the thermal shutdown hysteresis.

8.4 Device Functional Modes

8.4.1 Soft Start

The TPS6206x has an internal soft start circuit that controls the ramp up of the output voltage. Once the converter is enabled and the input voltage is above the undervoltage lockout threshold V_{UVLO} the output voltage ramps up from 5% to 95% of its nominal value within t_{Ramp} of typically 250 µs.

This limits the inrush current in the converter during start-up and prevents possible input voltage drops when a battery or high impedance power source is used.

During soft start, the switch current limit is reduced to 1/3 of its nominal value I_{LIMF} until the output voltage reaches 1/3 of its nominal value. Once the output voltage trips this threshold, the device operates with its nominal current limit I_{LIMF}.

8.4.2 Power Save Mode

At TPS62065 pulling the MODE pin low enables power save mode. In TPS62067 power save mode is enabled per default. If the load current decreases, the converter enters power save mode operation automatically. During power save mode the converter skips switching and operates with reduced frequency in PFM mode with a minimum quiescent current to maintain high efficiency. The converter positions the output voltage typically +1% above the nominal output voltage. This voltage positioning feature minimizes voltage drops caused by a sudden load step.

The transition from PWM mode to PFM mode occurs once the inductor current in the low-side MOSFET switch becomes zero, which indicates discontinuous conduction mode.

During the power save mode the output voltage is monitored with a PFM comparator. As the output voltage falls below the PFM comparator threshold of $V_{OUTnominal}$ +1%, the device starts a PFM current pulse. For this the high-side MOSFET switch will turn on and the inductor current ramps up. After the on-time expires the switch will be turned off and the low-side MOSFET switch will be turned on until the inductor current becomes zero.

The converter effectively delivers a current to the output capacitor and the load. If the load is below the delivered current the output voltage will rise. If the output voltage is equal or higher than the PFM comparator threshold, the device stops switching and enters a sleep mode with typically 18 µA current consumption.

In case the output voltage is still below the PFM comparator threshold, further PFM current pulses will be generated until the PFM comparator threshold is reached. The converter starts switching again once the output voltage drops below the PFM comparator threshold due to the load current.

The PFM mode is exited and PWM mode entered in case the output current can no longer be supported in PFM mode.

Copyright © 2020 Texas Instruments Incorporated

8.4.3 Dynamic Voltage Positioning

This feature reduces the voltage undershoots and overshoots at load steps from light to heavy load and vice versa. It is active in power save mode and regulates the output voltage 1% higher than the nominal value. This provides more headroom for both the voltage drop at a load step, and the voltage increase at a load throw-off.

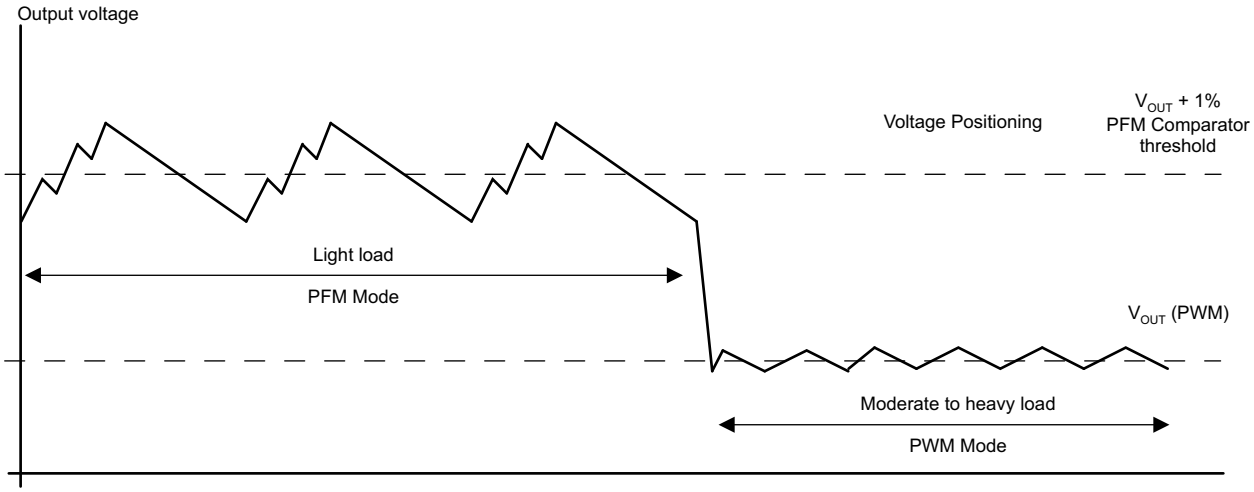

Figure 8-2. Power Save Mode Operation with Automatic Mode Transition

8.4.4 100% Duty Cycle Low Dropout Operation

The device starts to enter 100% duty cycle mode as the input voltage comes close to the nominal output voltage. To maintain the output voltage, the high-side MOSFET switch is turned on 100% for one or more cycles.

With further decreasing V_{IN} the high-side MOSFET switch is turned on completely. In this case the converter offers a low input-to-output voltage difference. This is particularly useful in battery-powered applications to achieve longest operation time by taking full advantage of the whole battery voltage range.

The minimum input voltage to maintain regulation depends on the load current and output voltage, and can be calculated as:

$$V_{IN}min = V_{O}max + I_{O}max \times (R_{DS(on)}max + R_{L}) \quad (1)$$

where

- I_{O}max = maximum output current
- $R_{DS(on)}$max = maximum P-channel switch $R_{DS(on)}$
- R_{L} = DC resistance of the inductor
- V_{O}max = nominal output voltage plus maximum output voltage tolerance

8.4.5 Internal Current Limit and Fold-Back Current Limit for Short Circuit Protection

During normal operation the high-side and low-side MOSFET switches are protected by its current limits I_{LIMF}. Once the high-side MOSFET switch reaches its current limit, it is turned off and the low-side MOSFET switch is turned on. The high-side MOSFET switch can only turn on again, once the current in the low-side MOSFET switch decreases below its current limit I_{LIMF}. The device is capable to provide peak inductor currents up to its internal current limit$_{ILIMF.}$.

As soon as the switch current limits are hit and the output voltage falls below 1/3 of the nominal output voltage due to overload or short circuit condition, the foldback current limit is enabled. In this case the switch current limit is reduced to 1/3 of the nominal value I_{LIMF}.

Due to the short circuit protection is enabled during start-up, the device does not deliver more than 1/3 of its nominal current limit I_{LIMF} until the output voltage exceeds 1/3 of the nominal output voltage. This needs to be considered when a load is connected to the output of the converter, which acts as a current sink.

Copyright © 2020 Texas Instruments Incorporated

8.4.6 Output Capacitor Discharge

With EN = GND, the device enters shutdown mode and all internal circuits are disabled. The SW pin is connected to PGND through an internal resistor to discharge the output capacitor. This feature ensures a startup in a discharged output capacitor once the converter is enabled again and prevents "floating" charge on the output capacitor. The output voltage ramps up monotonic starting from 0 V.

Copyright © 2020 Texas Instruments Incorporated

9 Application and Implementation

Note

Information in the following applications sections is not part of the TI component specification, and TI does not warrant its accuracy or completeness. TI's customers are responsible for determining suitability of components for their purposes. Customers should validate and test their design implementation to confirm system functionality.

9.1 Application Information

The TPS62065 and TPS62067 are highly efficient synchronous step down DC/DC converters providing up to 2-A output current.

9.2 Typical Application

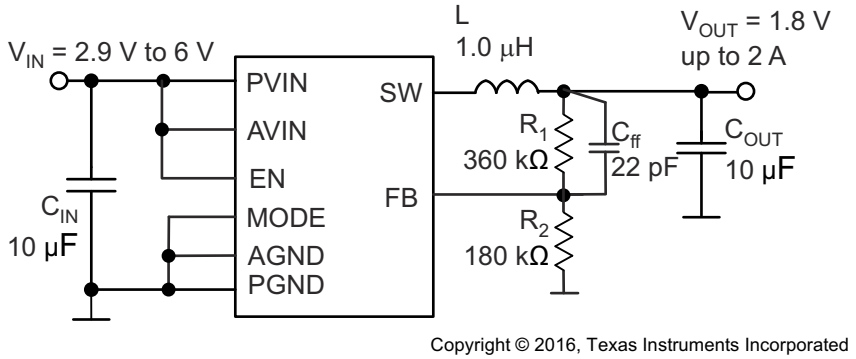

Copyright © 2016, Texas Instruments Incorporated

Figure 9-1. TPS62065 1.8-V Adjustable Output Voltage Configuration

9.2.1 Design Requirements

The device operates over an input voltage range from 2.9 V to 6 V. The output voltage is adjustable using an external feedback divider.

9.2.2 Detailed Design Procedure

9.2.2.1 Output Voltage Setting

The output voltage can be calculated to:

$$V_{OUT} = V_{REF} \times \left(1 + \frac{R_1}{R_2}\right) \qquad R_1 = \left(\frac{V_{OUT}}{V_{REF}} - 1\right) \times R_2 \tag{2}$$

with an internal reference voltage V_{REF} typically 0.6 V.

To minimize the current through the feedback divider network, R_2 should be within the range of 120 kΩ to 360 kΩ. The sum of R_1 and R_2 should not exceed approximately 1 MΩ, to keep the network robust against noise. An external feed-forward capacitor C_{ff} is required for optimum regulation performance. Lower resistor values can be used. R_1 and C_{ff} places a zero in the loop. The right value for C_{ff} can be calculated as:

$$f_z = \frac{1}{2 \times \pi \times R_1 \times C_{ff}} = 25\ \text{kHz} \tag{3}$$

$$C_{ff} = \frac{1}{2 \times \pi \times R_1 \times 25\ \text{kHz}} \tag{4}$$

Copyright © 2020 Texas Instruments Incorporated

9.2.2.2 Output Filter Design (Inductor and Output Capacitor)

The internal compensation network of TPS6206x is optimized for a LC output filter with a corner frequency of:

$$f_c = \frac{1}{2 \times \pi \times \sqrt{(1\mu H \times 10\mu F)}} = 50kHz \tag{5}$$

The device operates with nominal inductors of 1 µH to 1.2 µH and with 10 µF to 22 µF small X5R and X7R ceramic capacitors. Refer to the lists of inductors and capacitors. The device is optimized for a 1-µH inductor and 10-µF output capacitor.

9.2.2.2.1 Inductor Selection

The inductor value has a direct effect on the ripple current. The selected inductor must be rated for its DC resistance and saturation current. The inductor ripple current (ΔI_L) decreases with higher inductance and increases with higher V_{IN} or V_{OUT}.

Equation 6 calculates the maximum inductor current in PWM mode under static load conditions. The saturation current of the inductor should be rated higher than the maximum inductor current as calculated with Equation 7. This is recommended because during heavy load transient the inductor current rises above the calculated value.

$$\Delta I_L = Vout \times \frac{1 - \frac{Vout}{Vin}}{L \times f} \tag{6}$$

$$I_{Lmax} = I_{outmax} + \frac{\Delta I_L}{2} \tag{7}$$

where

- f = Switching frequency (3 MHz typical)
- L = Inductor value
- ΔI_L = Peak-to-peak inductor ripple current
- I_{Lmax} = Maximum inductor current

A more conservative approach is to select the inductor current rating just for the switch current limit I_{LIMF} of the converter.

The total losses of the coil have a strong impact on the efficiency of the DC/DC conversion and consist of both the losses in the DC resistance $R_{(DC)}$ and the following frequency-dependent components:

- The losses in the core material (magnetic hysteresis loss, especially at high switching frequencies)
- Additional losses in the conductor from the skin effect (current displacement at high frequencies)
- Magnetic field losses of the neighboring windings (proximity effect)
- Radiation losses

Table 9-1. List of Inductors

DIMENSIONS (mm^3)	INDUCTANCE (µH)	INDUCTOR TYPE	SUPPLIER
3.2 × 2.5 × 1 maximum	1	LQM32PN (MLCC)	Murata
3.7 × 4 × 1.8 maximum	1	LQH44 (wire wound)	Murata
4 × 4 × 2.6 maximum	1.2	NRG4026T (wire wound)	Taiyo Yuden
3.5 × 3.7 × 1.8 maximum	1.2	DE3518 (wire wound)	TOKO

9.2.2.2.2 Output Capacitor Selection

The advanced fast-response voltage mode control scheme of the TPS6206x allows the use of tiny ceramic capacitors. TI recommends ceramic capacitors with low ESR values that have the lowest output voltage ripple.

The output capacitor requires either an X7R or X5R dielectric. Y5V and Z5U dielectric capacitors, aside from their wide variation in capacitance over temperature, become resistive at high frequencies and may not be used. For most applications a nominal 10-µF or 22-µF capacitor is suitable. At small ceramic capacitors, the DC-bias effect decreases the effective capacitance. Therefore a 22-µF capacitor can be used for output voltages higher than 2 V, see list of capacitors.

In case additional ceramic capacitors in the supplied system are connected to the output of the DC/DC converter, the output capacitor C_{OUT} must be decreased in order not to exceed the recommended effective capacitance range. In this case a loop stability analysis must be performed as described later.

At nominal load current, the device operates in PWM mode and the RMS ripple current is calculated as:

$$I_{RMSCout} = V_{out} \times \frac{1 - \frac{V_{out}}{V_{in}}}{L \times f} \times \frac{1}{2 \times \sqrt{3}} \tag{8}$$

9.2.2.2.3 Input Capacitor Selection

Because of the nature of the buck converter having a pulsating input current, a low ESR input capacitor is required for best input voltage filtering and minimizing the interference with other circuits caused by high input voltage spikes. For most applications, TI recommends a 10-µF ceramic capacitor. The input capacitor can be increased without any limit for better input voltage filtering.

Take care when using only small ceramic input capacitors. When a ceramic capacitor is used at the input and the power is being supplied through long wires, such as from a wall adapter, a load step at the output or VIN step on the input can induce ringing at the VIN pin. This ringing can couple to the output and be mistaken as loop instability or could even damage the part by exceeding the maximum ratings.

Table 9-2. List of Capacitors

CAPACITANCE	TYPE	SIZE (mm^3)	SUPPLIER
10µF	GRM188R60J106M	0603: 1.6 x 0.8 x 0.8	Murata
22µF	GRM188R60G226M	0603: 1.6 x 0.8 x 0.8	Murata
22µF	CL10A226MQ8NRNC	0603: 1.6 x 0.8 x 0.8	Samsung
10µF	CL10A106MQ8NRNC	0603: 1.6 x 0.8 x 0.8	Samsung

9.2.2.3 Checking Loop Stability

The first step of circuit and stability evaluation is to look from a steady-state perspective at the following signal

- Switching node, SW
- Inductor current, I_L
- Output ripple voltage, $V_{OUT(AC)}$

These are the basic signals that must be measured when evaluating a switching converter. When the switching waveform shows large duty cycle jitter or the output voltage or inductor current shows oscillations, the regulation loop may be unstable. This is often a result of board layout and/or wrong L-C output filter combinations. As a next step in the evaluation of the regulation loop, the load transient response is tested. The time between the application of the load transient and the turnon of the P-channel MOSFET, the output capacitor must supply all of the current required by the load. V_{OUT} immediately shifts by an amount equal to $\Delta_{I(LOAD)}$ x ESR, where ESR is the effective series resistance of C_{OUT}. $\Delta_{I(LOAD)}$ begins to charge or discharge C_{OUT} generating a feedback error signal used by the regulator to return V_{OUT} to its steady-state value. The results are most easily interpreted when the device operates in PWM mode at medium to high load currents.

During this recovery time, V_{OUT} can be monitored for settling time, overshoot, or ringing; that helps evaluate stability of the converter. Without any ringing, the loop has usually more than 45° of phase margin.

Copyright © 2020 Texas Instruments Incorporated

9.2.3 Application Curves

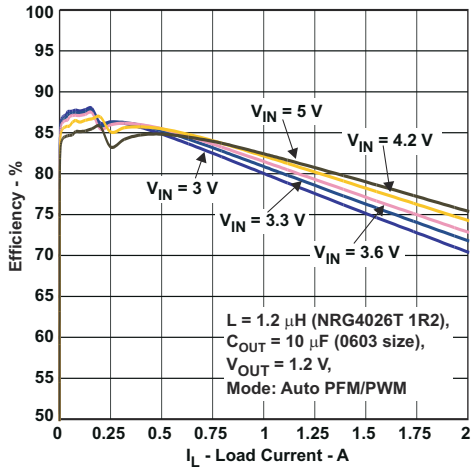

Figure 9-2. V_{OUT} = 1.2 V, Auto PFM/PWM Mode, Linear Scale

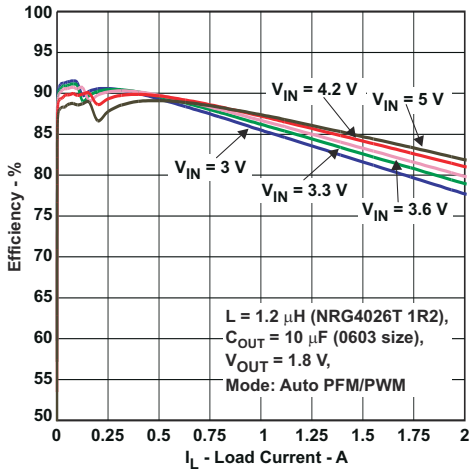

Figure 9-3. V_{OUT} = 1.8 V, Auto PFM/PWM Mode, Linear Scale

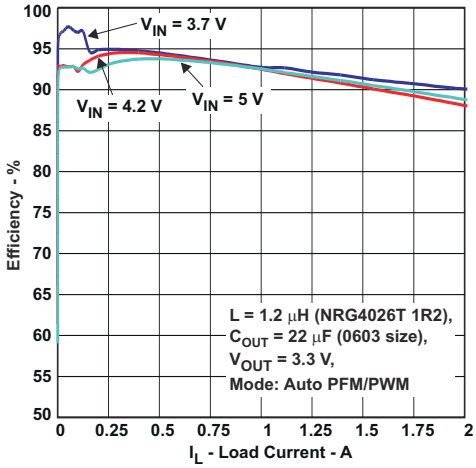

Figure 9-4. V_{OUT} = 3.3 V, Auto PFM/PWM Mode, Linear Scale

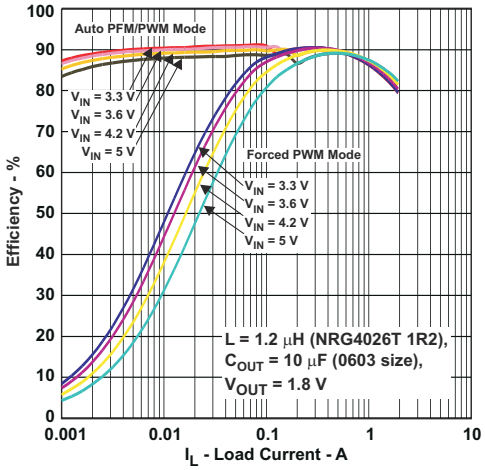

Figure 9-5. Auto PFM/PWM Mode vs. Forced PWM Mode, Logarithmic Scale

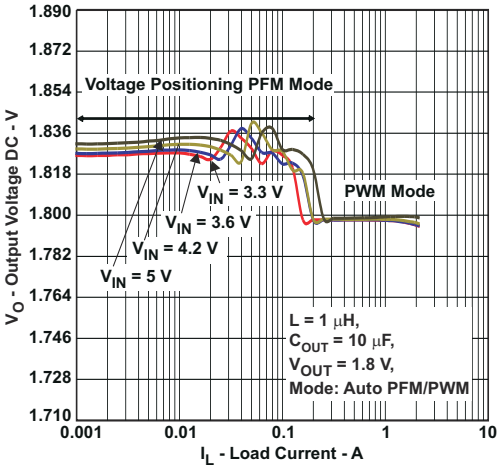

Figure 9-6. Auto PFM/PWM Mode

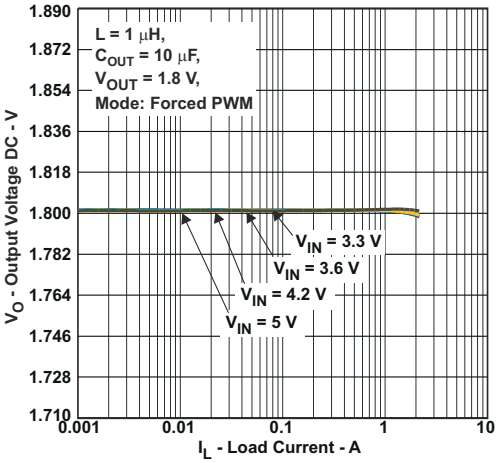

Figure 9-7. Forced PWM Mode

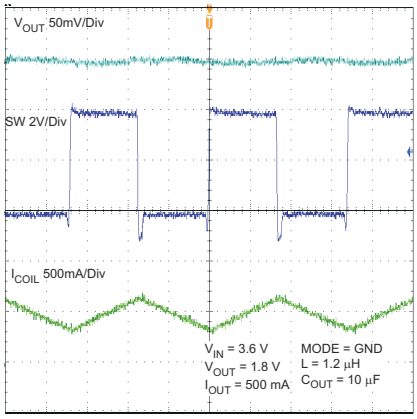

Figure 9-8. Typical Operation (PWM Mode)

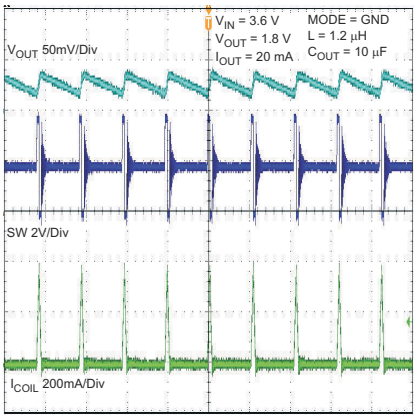

Figure 9-9. Typical Operation (PFM Mode)

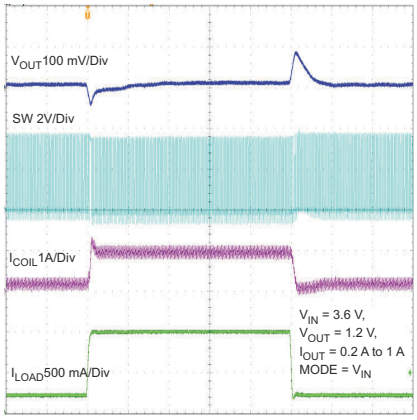

Figure 9-10. Load Transient Response PWM Mode 0.2 A to 1 A

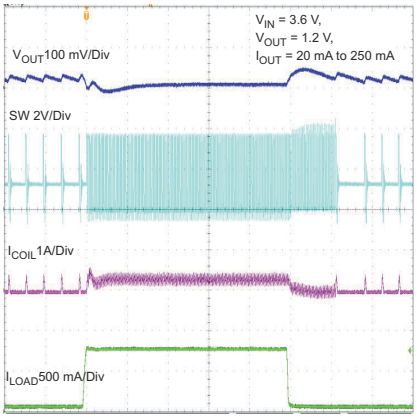

Figure 9-11. Load Transient PFM Mode 20 mA to 250 mA

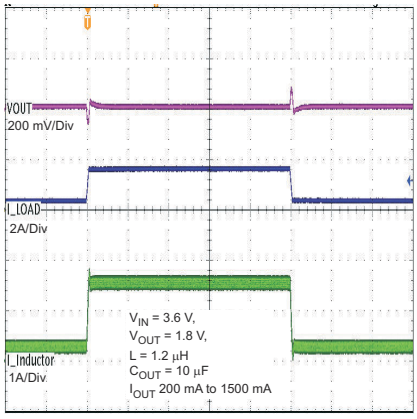

Figure 9-12. Load Transient Response 200 mA to 1500 mA

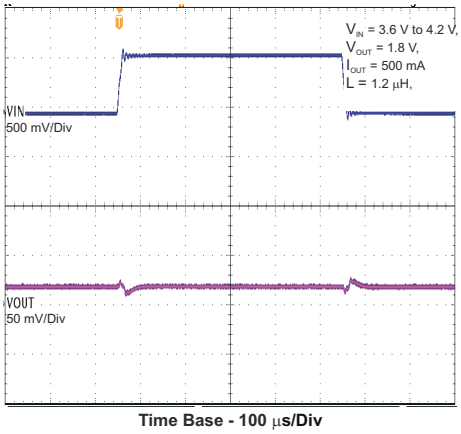

Figure 9-13. Line Transient Response PWM Mode

Copyright © 2020 Texas Instruments Incorporated

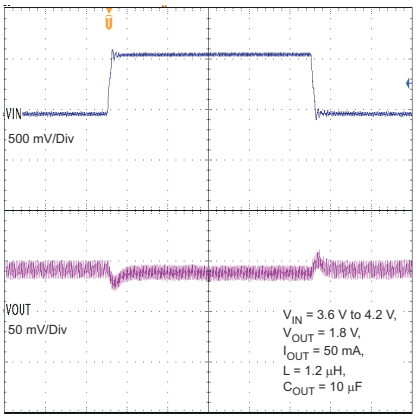

Time Base - 100 µs/Div

Figure 9-14. Line Transient PFM Mode

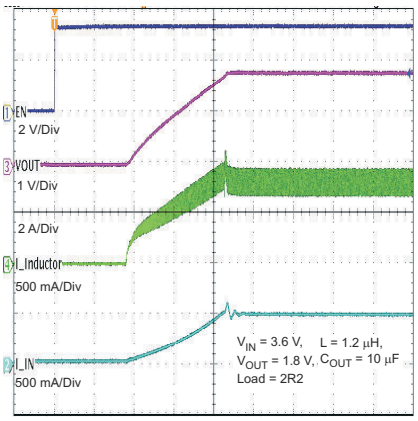

Time Base - 100 µs/Div

Figure 9-15. Startup Into Load – V_{OUT} 1.8 V

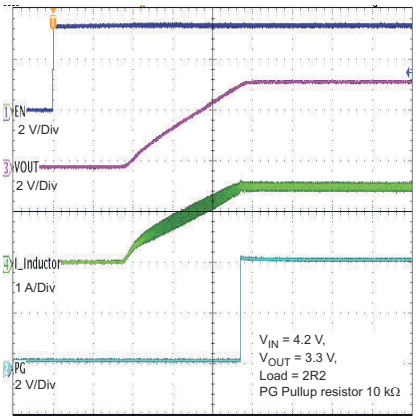

Time Base - 100 µs/Div

Figure 9-16. Start-up TPS62067 Into 2.2-Ω Load With Power Good

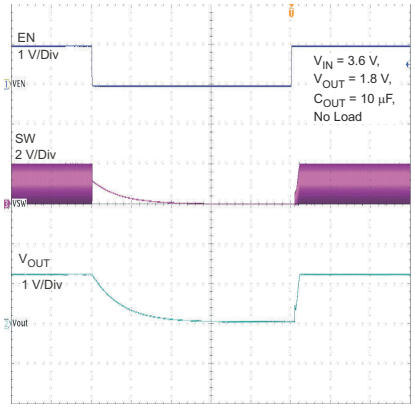

Time Base - 2ms/Div

Figure 9-17. Output Discharge

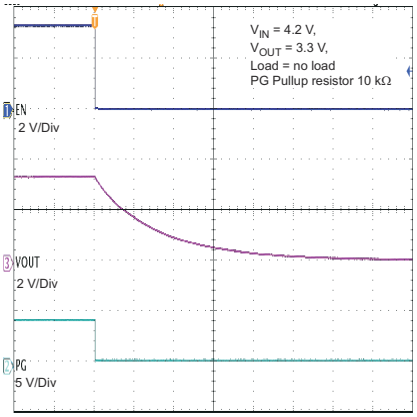

Time Base - 1 ms/Div

Figure 9-18. Shutdown TPS62067

9.3 System Example

The TPS62067 provides an open-drain power good output, refer to *Section 8.3.2*.

9.3.1 TPS62067 Adjustable 1.8-V Output

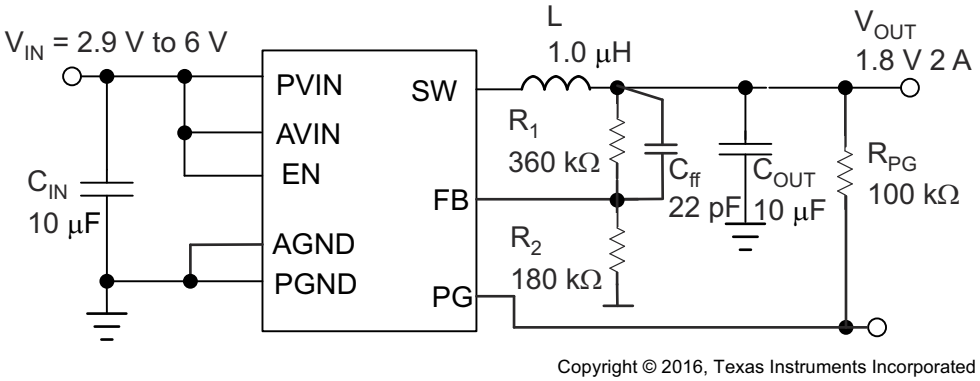

Copyright © 2016, Texas Instruments Incorporated

Figure 9-19. TPS62067 Adjustable 1.8-V Output

Copyright © 2020 Texas Instruments Incorporated

10 Power Supply Recommendations

The power supply to the TPS6206x must have a current rating according to the supply voltage, output voltage, and output current of the TPS6206x.

11 Layout

11.1 Layout Guidelines

Take care in board layout to get the specified performance. If the layout is not carefully done, the regulator could show poor line and/or load regulation, stability issues as well as EMI and thermal problems. It is critical to provide a low inductance, impedance ground path. Therefore, use wide and short traces for the main current paths. The input capacitor should be placed as close as possible to the IC pins as well as the inductor and output capacitor.

Connect the AGND and PGND pins of the device to the PowerPAD™ land of the PCB and use this pad as a star point. Use a common power PGND node and a different node for the signal AGND to minimize the effects of ground noise. The FB divider network should be connected right to the output capacitor and the FB line must be routed away from noisy components and traces (for example, SW line).

Due to the small package of this converter and the overall small solution size the thermal performance of the PCB layout is important. To get a good thermal performance, TI recommends a four or more Layer PCB design. The PowerPAD™ of the IC must be soldered on the power pad area on the PCB to get a proper thermal connection. For good thermal performance the PowerPAD™ on the PCB needs to be connected to an inner GND plane with sufficient via connections. Refer to the documentation of the evaluation kit.

11.2 Layout Example

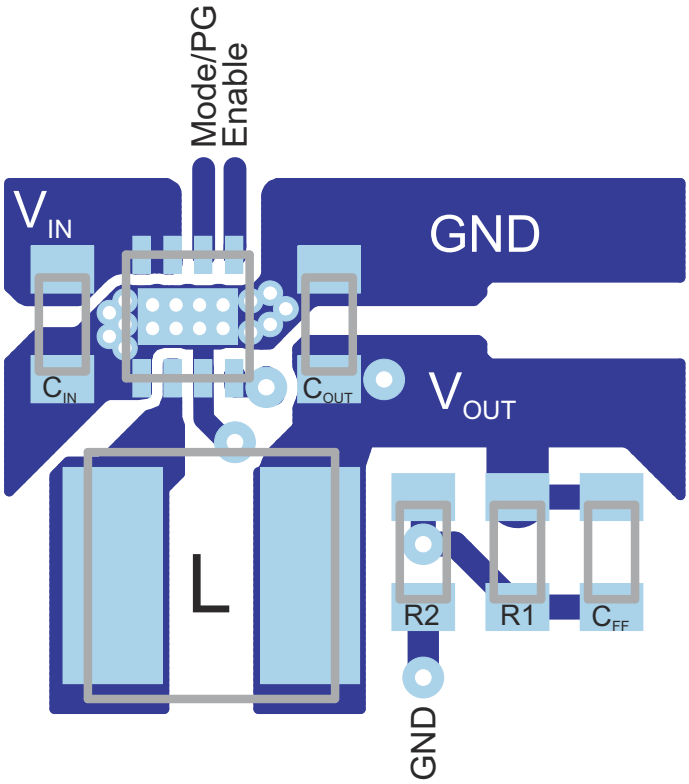

Figure 11-1. PCB Layout

12 Device and Documentation Support

12.1 Device Support

12.1.1 Third-Party Products Disclaimer

TI'S PUBLICATION OF INFORMATION REGARDING THIRD-PARTY PRODUCTS OR SERVICES DOES NOT CONSTITUTE AN ENDORSEMENT REGARDING THE SUITABILITY OF SUCH PRODUCTS OR SERVICES OR A WARRANTY, REPRESENTATION OR ENDORSEMENT OF SUCH PRODUCTS OR SERVICES, EITHER ALONE OR IN COMBINATION WITH ANY TI PRODUCT OR SERVICE.

12.2 Related Links

The table below lists quick access links. Categories include technical documents, support and community resources, tools and software, and quick access to sample or buy.

Table 12-1. Related Links

PARTS	PRODUCT FOLDER	SAMPLE & BUY	TECHNICAL DOCUMENTS	TOOLS & SOFTWARE	SUPPORT & COMMUNITY
TPS62065	Click here	Click here	Click here	Click here	Click here
TPS62067	Click here	Click here	Click here	Click here	Click here

12.3 Receiving Notification of Documentation Updates

To receive notification of documentation updates, navigate to the device product folder on ti.com. Click on *Subscribe to updates* to register and receive a weekly digest of any product information that has changed. For change details, review the revision history included in any revised document.

12.4 Support Resources

TI E2E™ support forums are an engineer's go-to source for fast, verified answers and design help — straight from the experts. Search existing answers or ask your own question to get the quick design help you need.

Linked content is provided "AS IS" by the respective contributors. They do not constitute TI specifications and do not necessarily reflect TI's views; see TI's Terms of Use.

12.5 Trademarks

PowerPAD™ and TI E2E™ are trademarks of Texas Instruments.
All other trademarks are the property of their respective owners.

12.6 Electrostatic Discharge Caution

This integrated circuit can be damaged by ESD. Texas Instruments recommends that all integrated circuits be handled with appropriate precautions. Failure to observe proper handling and installation procedures can cause damage.

ESD damage can range from subtle performance degradation to complete device failure. Precision integrated circuits may be more susceptible to damage because very small parametric changes could cause the device not to meet its published specifications.

12.7 Glossary

TI Glossary This glossary lists and explains terms, acronyms, and definitions.

13 Mechanical, Packaging, and Orderable Information

The following pages include mechanical, packaging, and orderable information. This information is the most current data available for the designated devices. This data is subject to change without notice and revision of this document. For browser-based versions of this data sheet, refer to the left-hand navigation.

Copyright © 2020 Texas Instruments Incorporated

PACKAGING INFORMATION

Orderable part number	Status (1)	Material type (2)	Package | Pins	Package qty | Carrier	RoHS (3)	Lead finish/ Ball material (4)	MSL rating/ Peak reflow (5)	Op temp (°C)	Part marking (6)
TPS62065DSGR	Active	Production	WSON (DSG) | 8	3000 | LARGE T&R	Yes	Call TI | Nipdauag | Nipdau	Level-2-260C-1 YEAR	-40 to 125	OFA
TPS62065DSGR.A	Active	Production	WSON (DSG) | 8	3000 | LARGE T&R	Yes	NIPDAU	Level-2-260C-1 YEAR	-40 to 125	OFA
TPS62065DSGT	Active	Production	WSON (DSG) | 8	250 | SMALL T&R	Yes	Call TI | Nipdauag | Nipdau	Level-2-260C-1 YEAR	-40 to 125	OFA
TPS62065DSGT.A	Active	Production	WSON (DSG) | 8	250 | SMALL T&R	Yes	NIPDAU	Level-2-260C-1 YEAR	-40 to 125	OFA
TPS62065DSGTG4	Active	Production	WSON (DSG) | 8	250 | SMALL T&R	Yes	NIPDAU	Level-2-260C-1 YEAR	-40 to 125	OFA
TPS62065DSGTG4.A	Active	Production	WSON (DSG) | 8	250 | SMALL T&R	Yes	NIPDAU	Level-2-260C-1 YEAR	-40 to 125	OFA
TPS62067DSGR	Active	Production	WSON (DSG) | 8	3000 | LARGE T&R	Yes	Call TI | Nipdauag | Nipdau	Level-2-260C-1 YEAR	-40 to 125	ODH
TPS62067DSGR.A	Active	Production	WSON (DSG) | 8	3000 | LARGE T&R	Yes	NIPDAU	Level-2-260C-1 YEAR	-40 to 125	ODH
TPS62067DSGRG4	Active	Production	WSON (DSG) | 8	3000 | LARGE T&R	Yes	NIPDAU	Level-2-260C-1 YEAR	-40 to 125	ODH
TPS62067DSGRG4.A	Active	Production	WSON (DSG) | 8	3000 | LARGE T&R	Yes	NIPDAU	Level-2-260C-1 YEAR	-40 to 125	ODH
TPS62067DSGT	Active	Production	WSON (DSG) | 8	250 | SMALL T&R	Yes	Call TI | Nipdauag | Nipdau	Level-2-260C-1 YEAR	-40 to 125	ODH
TPS62067DSGT.A	Active	Production	WSON (DSG) | 8	250 | SMALL T&R	Yes	NIPDAU	Level-2-260C-1 YEAR	-40 to 125	ODH

(1) **Status:** For more details on status, see our product life cycle.

(2) **Material type:** When designated, preproduction parts are prototypes/experimental devices, and are not yet approved or released for full production. Testing and final process, including without limitation quality assurance, reliability performance testing, and/or process qualification, may not yet be complete, and this item is subject to further changes or possible discontinuation. If available for ordering, purchases will be subject to an additional waiver at checkout, and are intended for early internal evaluation purposes only. These items are sold without warranties of any kind.

(3) **RoHS values:** Yes, No, RoHS Exempt. See the TI RoHS Statement for additional information and value definition.

(4) **Lead finish/Ball material:** Parts may have multiple material finish options. Finish options are separated by a vertical ruled line. Lead finish/Ball material values may wrap to two lines if the finish value exceeds the maximum column width.

(5) **MSL rating/Peak reflow:** The moisture sensitivity level ratings and peak solder (reflow) temperatures. In the event that a part has multiple moisture sensitivity ratings, only the lowest level per JEDEC standards is shown. Refer to the shipping label for the actual reflow temperature that will be used to mount the part to the printed circuit board.

(6) **Part marking:** There may be an additional marking, which relates to the logo, the lot trace code information, or the environmental category of the part.

Multiple part markings will be inside parentheses. Only one part marking contained in parentheses and separated by a "~" will appear on a part. If a line is indented then it is a continuation of the previous line and the two combined represent the entire part marking for that device.

Important Information and Disclaimer: The information provided on this page represents TI's knowledge and belief as of the date that it is provided. TI bases its knowledge and belief on information provided by third parties, and makes no representation or warranty as to the accuracy of such information. Efforts are underway to better integrate information from third parties. TI has taken and continues to take reasonable steps to provide representative and accurate information but may not have conducted destructive testing or chemical analysis on incoming materials and chemicals. TI and TI suppliers consider certain information to be proprietary, and thus CAS numbers and other limited information may not be available for release.

In no event shall TI's liability arising out of such information exceed the total purchase price of the TI part(s) at issue in this document sold by TI to Customer on an annual basis.

OTHER QUALIFIED VERSIONS OF TPS62065, TPS62067 :

- Automotive : TPS62065-Q1, TPS62067-Q1

NOTE: Qualified Version Definitions:

- Automotive - Q100 devices qualified for high-reliability automotive applications targeting zero defects

TAPE AND REEL INFORMATION

REEL DIMENSIONS

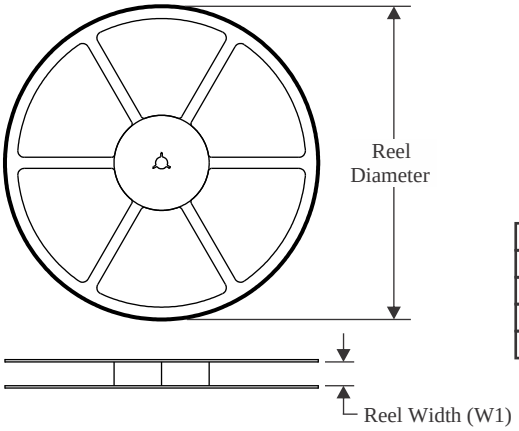

TAPE DIMENSIONS

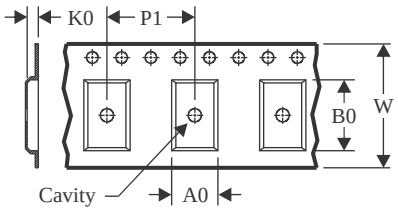

A0	Dimension designed to accommodate the component width
B0	Dimension designed to accommodate the component length
K0	Dimension designed to accommodate the component thickness
W	Overall width of the carrier tape
P1	Pitch between successive cavity centers

QUADRANT ASSIGNMENTS FOR PIN 1 ORIENTATION IN TAPE

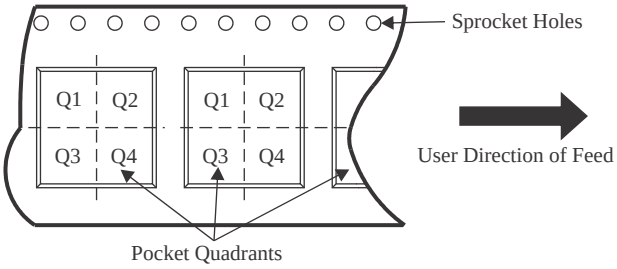

*All dimensions are nominal

Device	Package Type	Package Drawing	Pins	SPQ	Reel Diameter (mm)	Reel Width W1 (mm)	A0 (mm)	B0 (mm)	K0 (mm)	P1 (mm)	W (mm)	Pin1 Quadrant
TPS62065DSGR	WSON	DSG	8	3000	180.0	8.4	2.3	2.3	1.15	4.0	8.0	Q2
TPS62065DSGT	WSON	DSG	8	250	180.0	8.4	2.3	2.3	1.15	4.0	8.0	Q2
TPS62065DSGTG4	WSON	DSG	8	250	180.0	8.4	2.3	2.3	1.15	4.0	8.0	Q2
TPS62067DSGR	WSON	DSG	8	3000	180.0	8.4	2.3	2.3	1.15	4.0	8.0	Q2
TPS62067DSGRG4	WSON	DSG	8	3000	180.0	8.4	2.3	2.3	1.15	4.0	8.0	Q2
TPS62067DSGT	WSON	DSG	8	250	180.0	8.4	2.3	2.3	1.15	4.0	8.0	Q2

TAPE AND REEL BOX DIMENSIONS

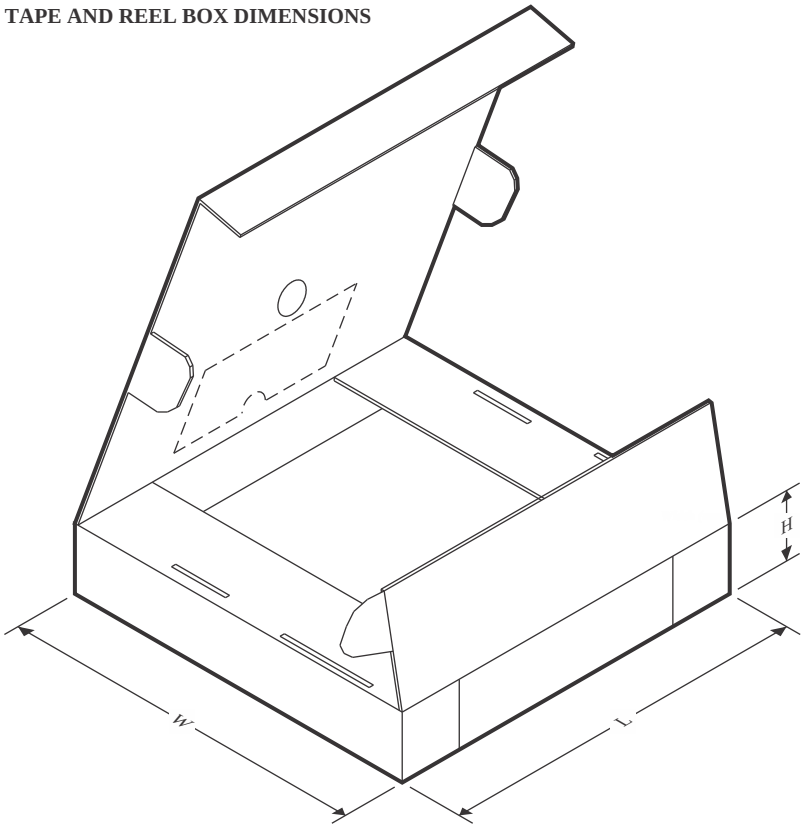

*All dimensions are nominal

Device	Package Type	Package Drawing	Pins	SPQ	Length (mm)	Width (mm)	Height (mm)
TPS62065DSGR	WSON	DSG	8	3000	210.0	185.0	35.0
TPS62065DSGT	WSON	DSG	8	250	210.0	185.0	35.0
TPS62065DSGTG4	WSON	DSG	8	250	210.0	185.0	35.0
TPS62067DSGR	WSON	DSG	8	3000	210.0	185.0	35.0
TPS62067DSGRG4	WSON	DSG	8	3000	210.0	185.0	35.0
TPS62067DSGT	WSON	DSG	8	250	210.0	185.0	35.0

GENERIC PACKAGE VIEW

DSG 8

WSON - 0.8 mm max height

2 x 2, 0.5 mm pitch

PLASTIC SMALL OUTLINE - NO LEAD

This image is a representation of the package family, actual package may vary.
Refer to the product data sheet for package details.

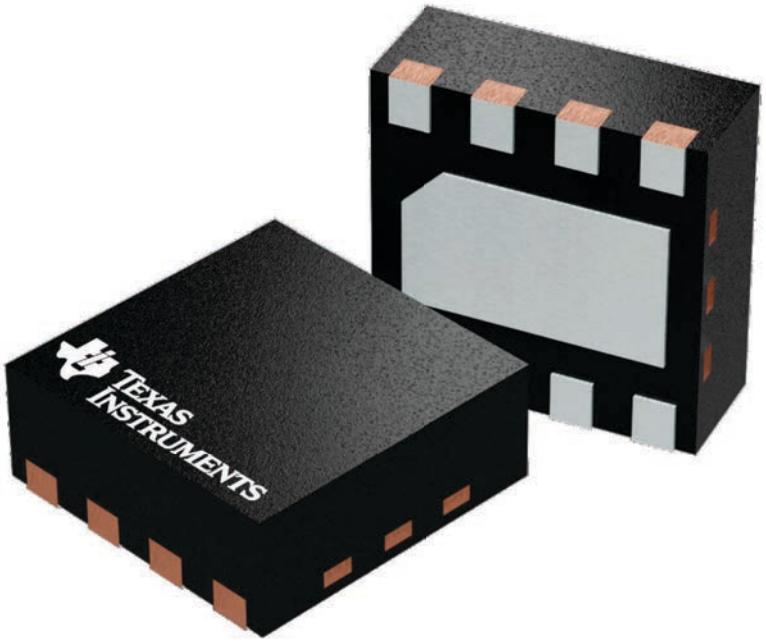

4224783/A

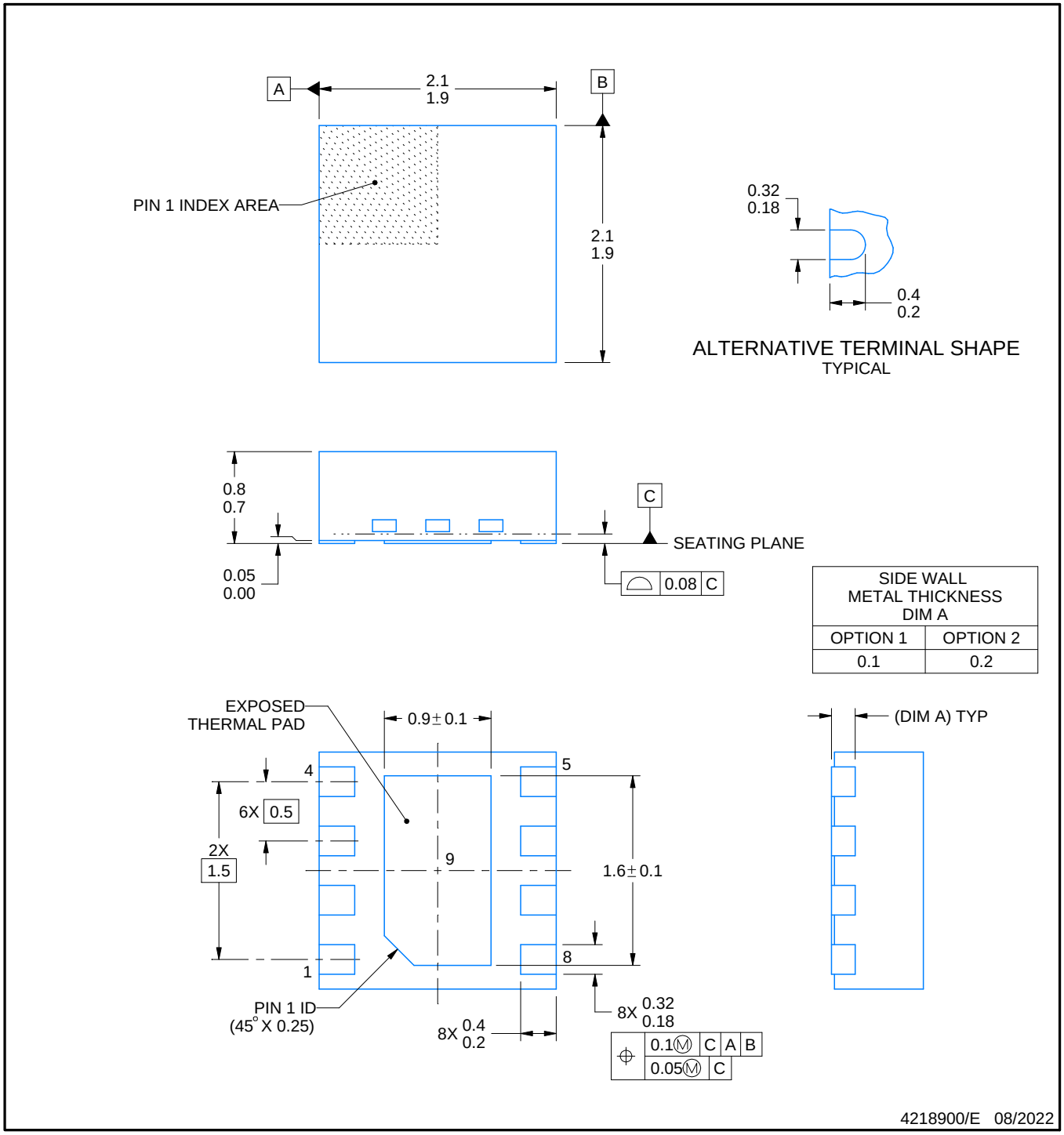

NOTES:

1. All linear dimensions are in millimeters. Any dimensions in parenthesis are for reference only. Dimensioning and tolerancing per ASME Y14.5M.
2. This drawing is subject to change without notice.
3. The package thermal pad must be soldered to the printed circuit board for thermal and mechanical performance.

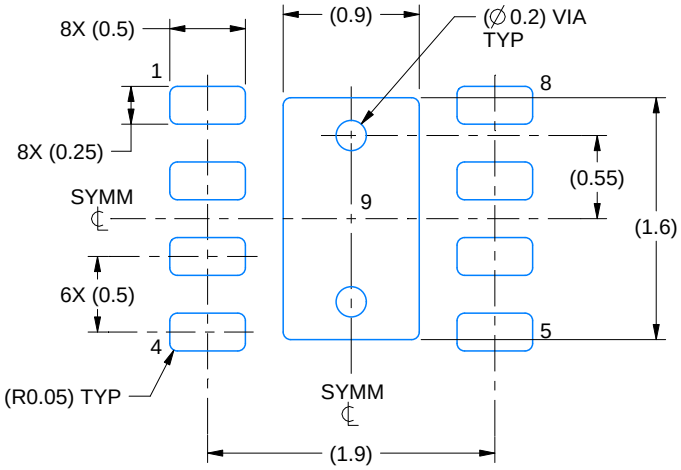

LAND PATTERN EXAMPLE
SCALE:20X

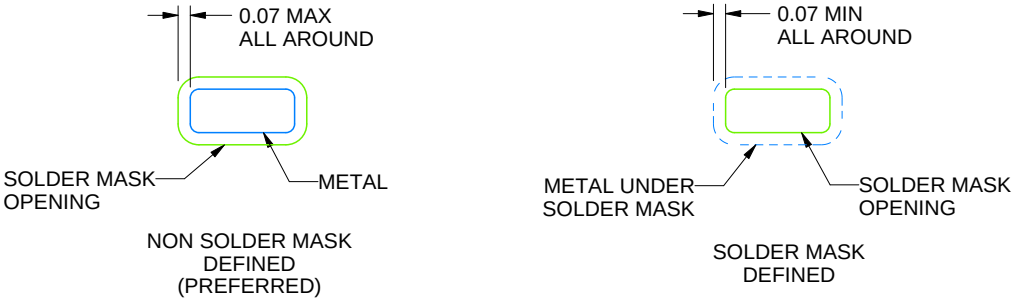

SOLDER MASK DETAILS

4218900/E 08/2022

NOTES: (continued)

4. This package is designed to be soldered to a thermal pad on the board. For more information, see Texas Instruments literature number SLUA271 (www.ti.com/lit/slua271).
5. Vias are optional depending on application, refer to device data sheet. If any vias are implemented, refer to their locations shown on this view. It is recommended that vias under paste be filled, plugged or tented.

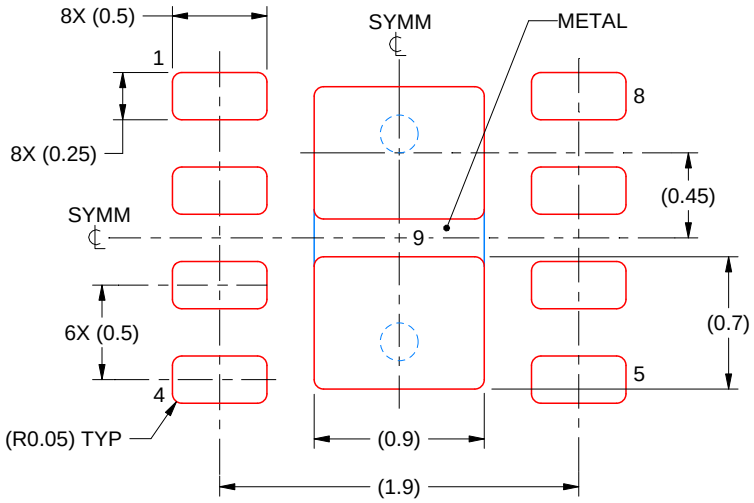

SOLDER PASTE EXAMPLE
BASED ON 0.125 mm THICK STENCIL

EXPOSED PAD 9:
87% PRINTED SOLDER COVERAGE BY AREA UNDER PACKAGE
SCALE:25X

4218900/E 08/2022

NOTES: (continued)

6. Laser cutting apertures with trapezoidal walls and rounded corners may offer better paste release. IPC-7525 may have alternate design recommendations.

IMPORTANT NOTICE AND DISCLAIMER

TI PROVIDES TECHNICAL AND RELIABILITY DATA (INCLUDING DATA SHEETS), DESIGN RESOURCES (INCLUDING REFERENCE DESIGNS), APPLICATION OR OTHER DESIGN ADVICE, WEB TOOLS, SAFETY INFORMATION, AND OTHER RESOURCES “AS IS” AND WITH ALL FAULTS, AND DISCLAIMS ALL WARRANTIES, EXPRESS AND IMPLIED, INCLUDING WITHOUT LIMITATION ANY IMPLIED WARRANTIES OF MERCHANTABILITY, FITNESS FOR A PARTICULAR PURPOSE OR NON-INFRINGEMENT OF THIRD PARTY INTELLECTUAL PROPERTY RIGHTS.

These resources are intended for skilled developers designing with TI products. You are solely responsible for (1) selecting the appropriate TI products for your application, (2) designing, validating and testing your application, and (3) ensuring your application meets applicable standards, and any other safety, security, regulatory or other requirements.

These resources are subject to change without notice. TI grants you permission to use these resources only for development of an application that uses the TI products described in the resource. Other reproduction and display of these resources is prohibited. No license is granted to any other TI intellectual property right or to any third party intellectual property right. TI disclaims responsibility for, and you will fully indemnify TI and its representatives against, any claims, damages, costs, losses, and liabilities arising out of your use of these resources.

TI’s products are provided subject to TI’s Terms of Sale or other applicable terms available either on ti.com or provided in conjunction with such TI products. TI’s provision of these resources does not expand or otherwise alter TI’s applicable warranties or warranty disclaimers for TI products.

TI objects to and rejects any additional or different terms you may have proposed.

Mailing Address: Texas Instruments, Post Office Box 655303, Dallas, Texas 75265
Copyright © 2025, Texas Instruments Incorporated