SN75ALS197 Quadruple Differential Line Receiver

1 Features

- Meets or exceeds the requirements of ITU recommendations V.10, V.11, X.26, and X.27
- Designed for multipoint bus transmission on long bus lines in noisy environments
- Designed to operate Up to 20 Mbaud
- 3-State outputs
- Common-mode input voltage Range: − 7 V to 7 V
- Input sensitivity: ±300 mV
- Input hysteresis: 120 mV typical
- High-input impedance: 12 kΩ minimum
- Operates from single 5-V supply
- Low supply-current requirement 35 mA maximum
- Improved speed and power consumption compared to AM26LS32A

2 Applications

- Motor drives
- Factory automation and control

3 Description

The SN75ALSI97 is a monolithic, quadruple line receiver with 3-state outputs designed using advanced, low-power, Schottky technology. This technology provides combined improvements in bar design, tooling production, and wafer fabrication. This, in turn, provides significantly lower power requirements and permits much higher data throughput than other designs. The device meets the specifications of ITU Recommendations V.10, V.11, X.26, and X.27. The 3-state outputs feature permits direct connection to a bus-organized system with a fail-safe design that makes sure the outputs is always high if the inputs are open.

The device is optimized for balanced, multipoint bus transmission at rates up to 20 megabits per second. The input features high-input impedance, input hysteresis for increased noise immunity, and an input sensitivity of ±300 mV over a common-mode input voltage range of −7 V to 7 V. The device also features active-high and active-low enable functions that are common to the four channels. The device is designed for optimum performance when used with the SN75ALS192 quadruple differential line driver.

The SN75ALS197 is characterized for operation from 0°C to 70°C.

Package Information

PART NUMBER	PACKAGE(1)	PACKAGE SIZE(2)
SN75ALS197	SOIC (D, 16)	9.9 mm × 6 mm
	PDIP (N, 16)	19.3 mm × 9.4 mm
	SO (NS, 16)	10 mm × 7.8 mm

(1) For more information, see Section 10.
(2) The package size (length × width) is a nominal value and includes pins, where applicable.

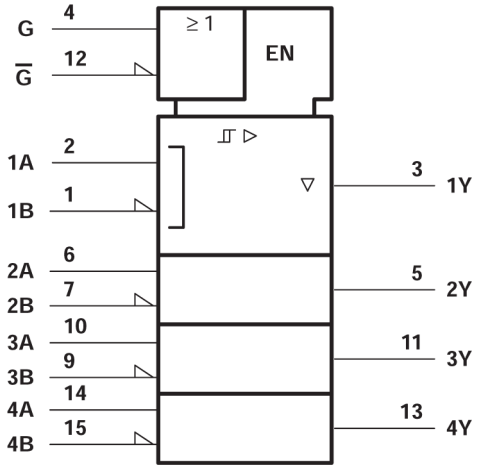

Logic Symbol†

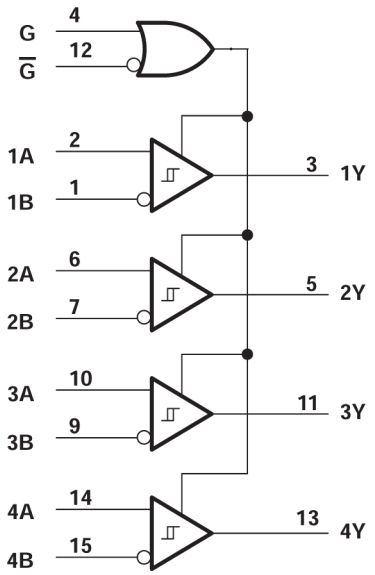

Logic Diagram (Positive Logic)

† This symbol is in accordance with ANSI/IEEE Std 91-1984 and IEC Publication 617-12.

An IMPORTANT NOTICE at the end of this data sheet addresses availability, warranty, changes, use in safety-critical applications, intellectual property matters and other important disclaimers. PRODUCTION DATA.

Table of Contents

1 Features.....1
2 Applications.....1
3 Description.....1
4 Pin Configuration and Functions.....3
5 Specifications.....4
5.1 Absolute Maximum Ratings.....4
5.2 Dissipation Ratings.....4
5.3 Recommended Operating Conditions.....4
5.4 Thermal Information.....4
5.5 Electrical Characteristics.....5
5.6 Switching Characteristics.....5
5.7 Typical Characteristics.....6
6 Parameter Measurement Information.....11
7 Detailed Description.....13
7.1 Device Functional Modes.....13
8 Device and Documentation Support.....14
8.1 Receiving Notification of Documentation Updates.....14
8.2 Support Resources.....14
8.3 Trademarks.....14
8.4 Electrostatic Discharge Caution.....14
8.5 Glossary.....14
9 Revision History.....14
10 Mechanical, Packaging, and Orderable Information.....14

Copyright © 2023 Texas Instruments Incorporated

4 Pin Configuration and Functions

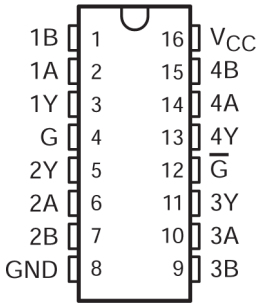

Figure 4-1. D or N Package (Top View)

Table 4-1. Pin Functions

PIN		TYPE[(1)]	DESCRIPTION
NAME	NO.		
1B	1	I	Channel 1 Differential Receiver Inverting Input
1A	2	I	Channel 1 Differential Receiver Non-Inverting Input
1Y	3	O	Channel 1 Single Ended Output
G	4	I	Active High Enable
2Y	5	O	Channel 2 Single Ended Output
2A	6	I	Channel 2 Differential Receiver Non-Inverting Input
2B	7	I	Channel 2 Differential Receiver Inverting Input
GND	8	GND	Device GND
3B	9	I	Channel 3 Differential Receiver Inverting Input
3A	10	I	Channel 3 Differential Receiver Non-Inverting Input
3Y	11	O	Channel 3 Single Ended Output
$\overline{G}$	12	I	Active Low Enable
4Y	13	O	Channel 4 Single Ended Output
4A	14	I	Channel 4 Differential Receiver Non-Inverting Input
4B	15	I	Channel 4 Differential Receiver Inverting Input
V_{CC}	16	PWR	Device VCC (4.75 V to 5.25 V)

(1) Signal Types: I = Input, O = Output, I/O = Input or Output.

Copyright © 2023 Texas Instruments Incorporated

5 Specifications

5.1 Absolute Maximum Ratings

over operating free-air temperature range (unless otherwise noted) [1]

		MIN	MAX	UNIT
V_{CC}	Supply voltage, see note[2]		7	V
V_I	Input voltage, A or B inputs		±15	V
V_{ID}	Differential input voltage, see note[3]		±15	V
V_I	Enable input voltage		7	V
I_{OL}	Low-level output current		50	mA
	Continuous total dissipation	See Dissipation Rating Table		
T_A	Operating free-air temperature range	0	70	°C
T_{stg}	Storage temperature range	− 65	150	°C
	Lead temperature 1,6 mm (1/16 inch) from case for 10 seconds		260	°C

(1) Stresses beyond those listed under “absolute maximum ratings” may cause permanent damage to the device. These are stress ratings only, and functional operation of the device at these or any other conditions beyond those indicated under “recommended operating conditions” is not implied. Exposure to absolute-maximum-rated conditions for extended periods may affect device reliability.
(2) All voltage values, except differential input voltage, are with respect to network ground terminal.
(3) Differential input voltage is measured at the noninverting input with respect to the corresponding inverting input.

5.2 Dissipation Ratings

PACKAGE	T_A ≤ 25°C POWER RATING	DERATING FACTOR	T_A = 70°C POWER RATING
D	950 mW	7.6 mW/°C	608 mW
N	1150 mW	9.2 mW/°C	736 mW

5.3 Recommended Operating Conditions

	MIN	NOM	MAX	UNIT
Supply voltage, V_{CC}	4.75	5	5.25	V
Common-mode input voltage, V_{IC}			±7	V
Differential input voltage, V_{ID}			±12	V
High-level input voltage, V_{IH}	2			V
Low-level input voltage, V_{IL}			0.8	V
High-level output current, I_{OH}			−400	µA
Low-level output current, I_{OL}			16	mA
Operating free-air temperature, T_A	0		70	°C

5.4 Thermal Information

THERMAL METRIC[1]		N (PDIP)	D (SOIC)	UNIT
		16 Pins	16 Pins	
$R_{\theta JA}$	Junction-to-ambient thermal resistance	60.6	84.6	°C/W
$R_{\theta JC(top)}$	Junction-to-case (top) thermal resistance	48.1	43.5	°C/W
$R_{\theta JB}$	Junction-to-board thermal resistance	40.6	43.2	°C/W
ψ_{JT}	Junction-to-top characterization parameter	27.5	10.4	°C/W
ψ_{JB}	Junction-to-board characterization parameter	40.3	42.8	°C/W

(1) For more information about traditional and new thermal metrics, see the *Semiconductor and IC package thermal metrics* application report.

Copyright © 2023 Texas Instruments Incorporated

5.5 Electrical Characteristics

over recommended range of common-mode input voltage, supply voltage, and operating free-air temperature (unless otherwise noted)

PARAMETER		TEST CONDITIONS		MIN	TYP[1]	MAX	UNIT
V_{IT+}	Positive-going input threshold voltage					300	mV
V_{IT-}	Negative-going input threshold voltage			−300[1]			mV
V_{hys}	Hysteresis voltage ($V_{IT+} - V_{IT-}$)	See Figure 5-1			120		mV
V_{IK}	Enable-input clamp voltage	I_I = −18 mA				−1.5	V
V_{OH}	High-level output voltage	V_{ID} = 300 mV,	I_{OH} = − 400 µA	2.7	1.6		V
V_{OL}	Low-level output voltage	V_{ID} = −300 mV	I_{OL} = 8 mA			0.45	V
			I_{OL} = 16 mA			0.5	
I_{OZ}	High-impedance-state output current	V_{CC} = 5.25 V	V_O = 2.4 V			20	µA
			V_{OH} = 0.4 V			−20	
I_I	Line input current	Other input at 0 V, See Note 3	V_I = 15 V		0.7	1.2	µA
			V_I = −15 V		−1.0	−1.7	
I_H	High-level enable-input current		V_{IH} = 2.7 V			20	µA
			V_{IH} = 5.25 V			100	
I_{IL}	Low-level enable-input current	V_{IL} = 0.4 V				−100	µA
	Input resistance			12	18		kΩ
I_{OS}	Short-circuit output current[2]	V_{ID} = 3 V,	V_O = 0	−15	−78	−130	mA
I_{CC}	Supply current	Outputs disabled			22	35	mA

(1) The algebraic convention, in which the less positive limit is designated minimum, is used in this data sheet for threshold voltage levels only.
(2) Not more than one output should be shorted at a time, and the duration of the short circuit should not exceed one second.
(3) Refer to ANSI Standard EIA/TIA-422-B and EIA/TIA-423-B for exact conditions.

5.6 Switching Characteristics

V_{CC} = 5 V, T_A = 25°C

PARAMETER		TEST CONDITIONS		MIN	TYP	MAX	UNIT
t_{PLH}	Propagation delay time, low- to high-level output	V_{ID} = −2.5 V to 2.5 V, See Figure 6-2	C_L = 15 pF		15	22	ns
t_{PHL}	Propagation delay time, high- to low-level output				15	22	ns
t_{PZH}	Output enable time to high level	C_L = 15 pF,	See Figure 6-3		13	25	ns
t_{PZL}	Output enable time to low level				11	25	
t_{PHZ}	Output disable time from high level	C_L = 15 pF,	See Figure 6-3		13	25	ns
t_{PLZ}	Output disable time from low level				15	22	

Copyright © 2023 Texas Instruments Incorporated

5.7 Typical Characteristics

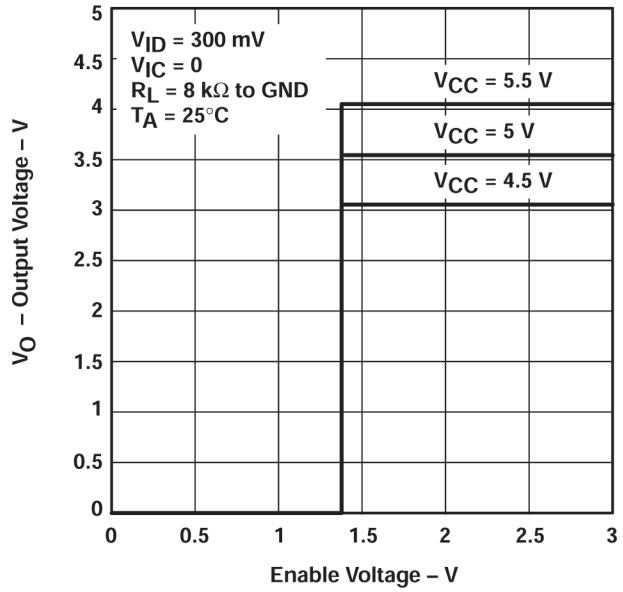

Figure 5-1. Output Voltage vs Enable Voltage

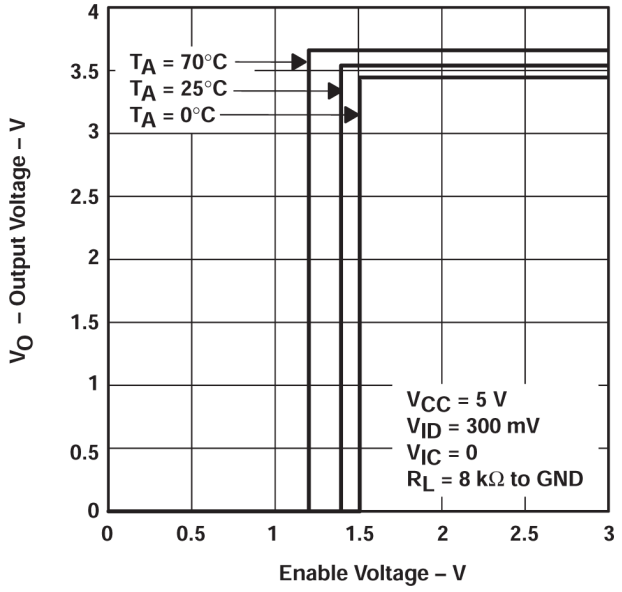

Figure 5-2. Output Voltage vs Enable Voltage

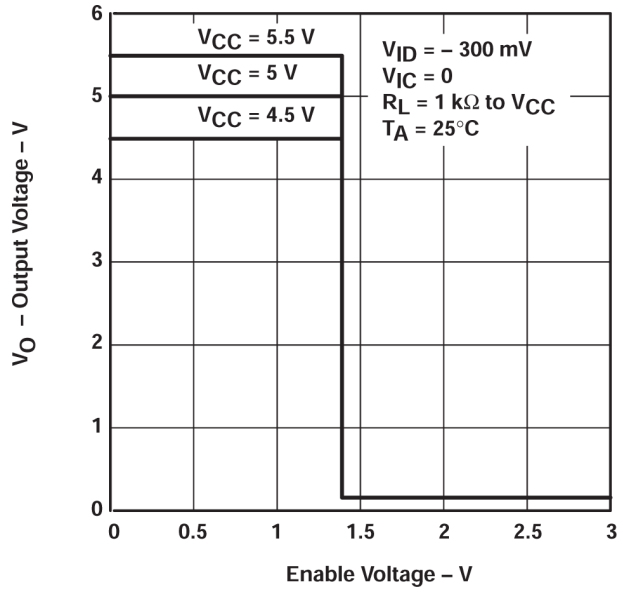

Figure 5-3. Output Voltage vs Enable Voltage

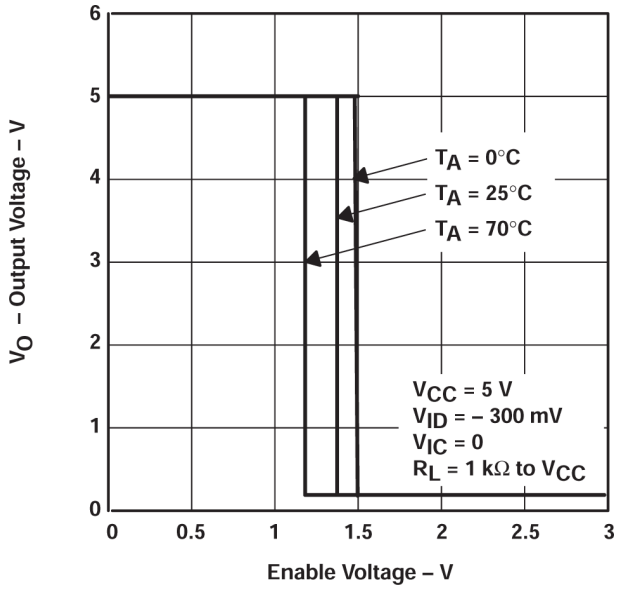

Figure 5-4. Output Voltage vs Enable Voltage

Copyright © 2023 Texas Instruments Incorporated

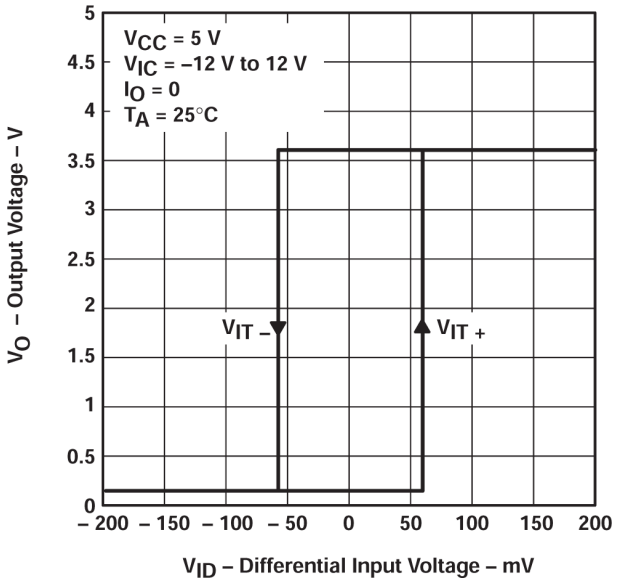

Figure 5-5. Output Voltage vs Differential Input Voltage

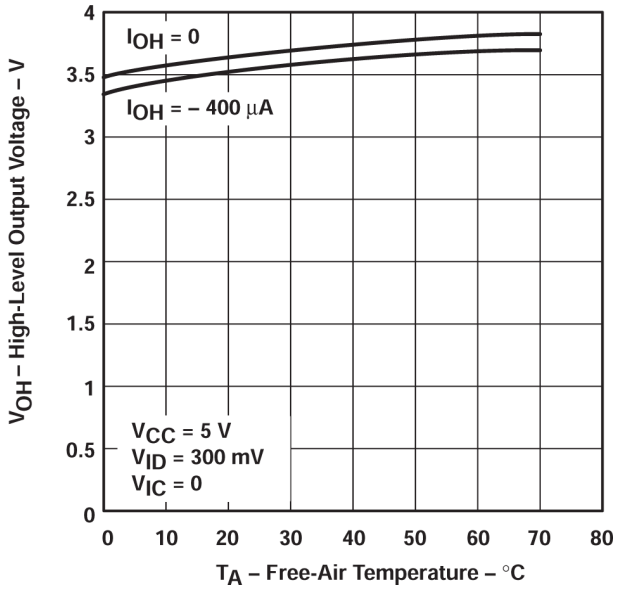

Figure 5-6. High-level Output Voltage vs Free-air Temperature

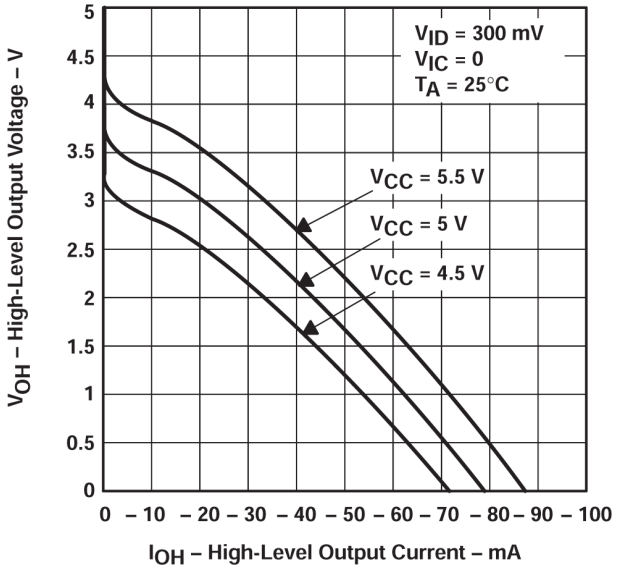

Figure 5-7. High-level Output Voltage vs High-level Output Current

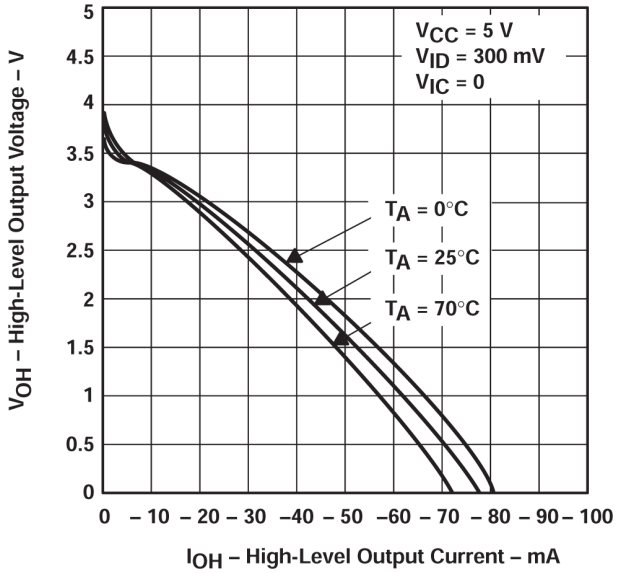

Figure 5-8. High-level Output Voltage vs High-level Output Current

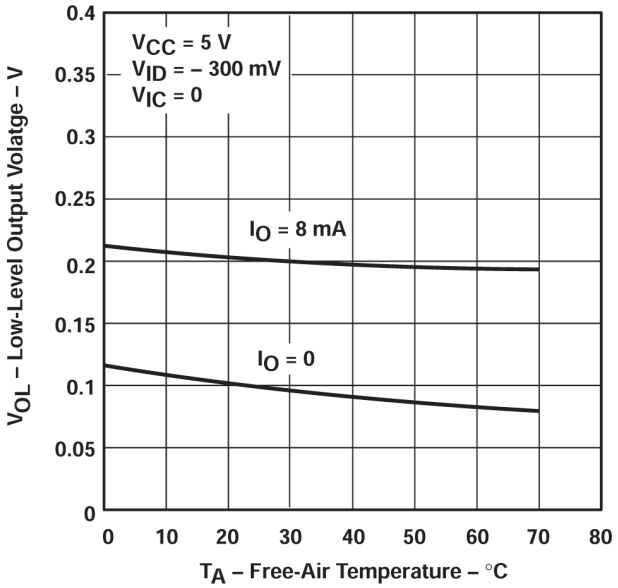

Figure 5-9. Low-level Output Voltage vs Free-air Temperature

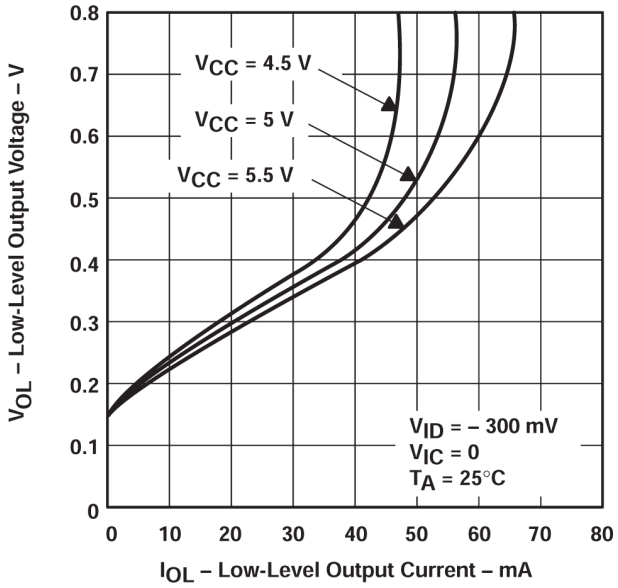

Figure 5-10. Low-level Output Voltage vs Low-level Output Current

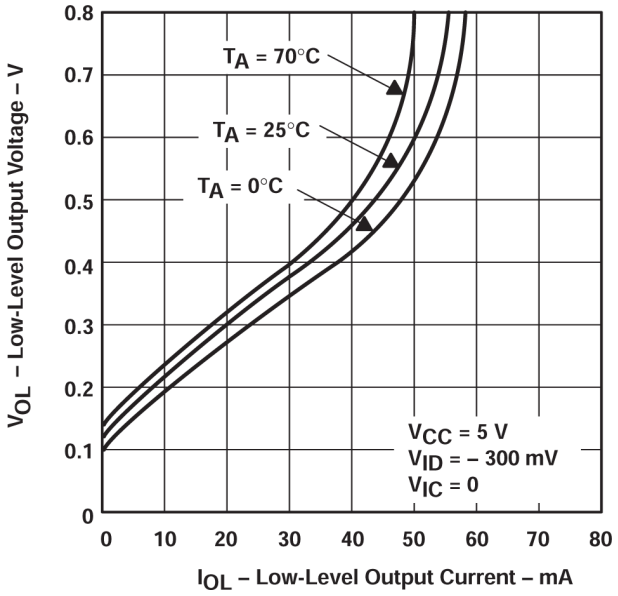

Figure 5-11. Low-level Output Voltage vs Low-level Output Current

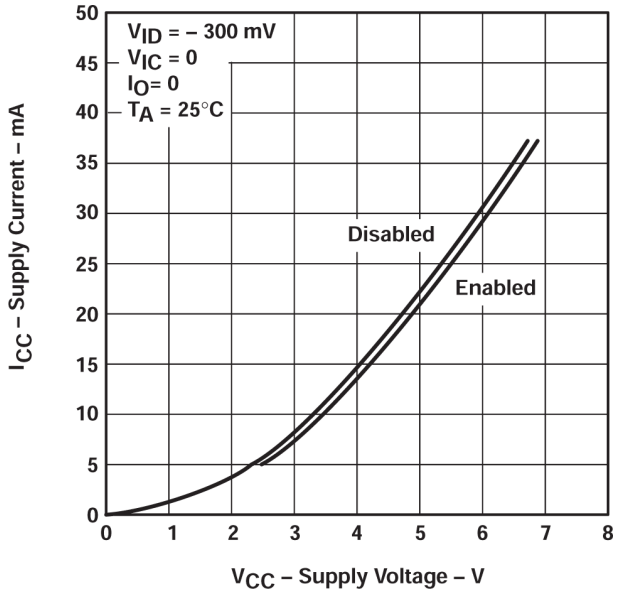

Figure 5-12. Supply Current vs Supply Voltage

Copyright © 2023 Texas Instruments Incorporated

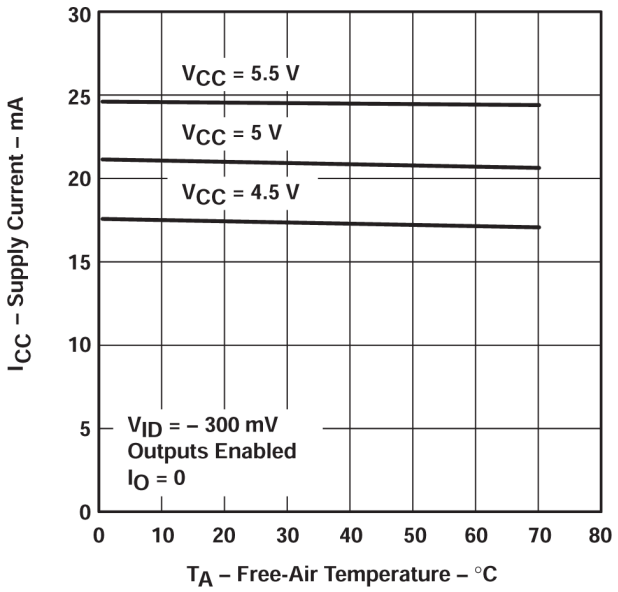

Figure 5-13. Supply Current vs Free-air Temperature

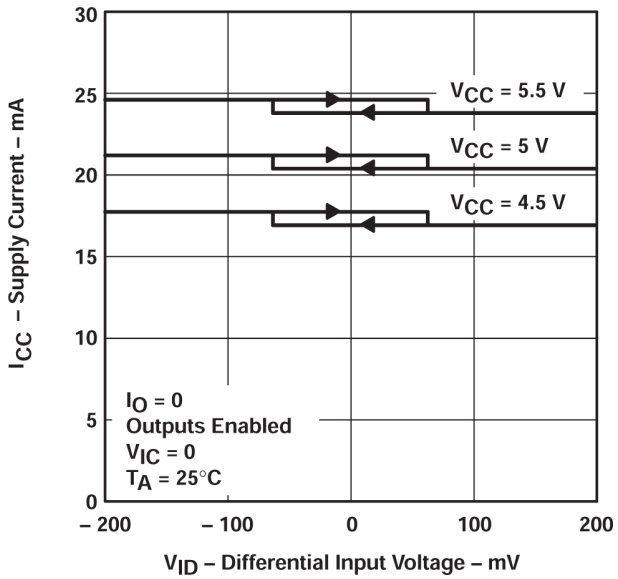

Figure 5-14. Supply Current vs Differential Input Voltage

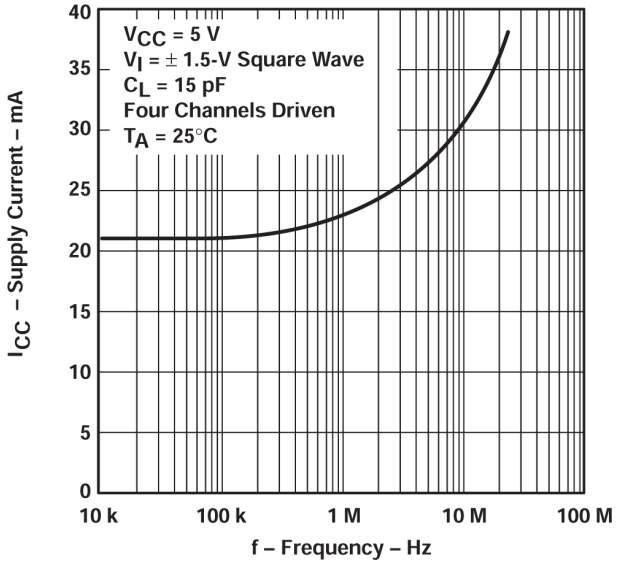

Figure 5-15. Supply Current vs Frequency

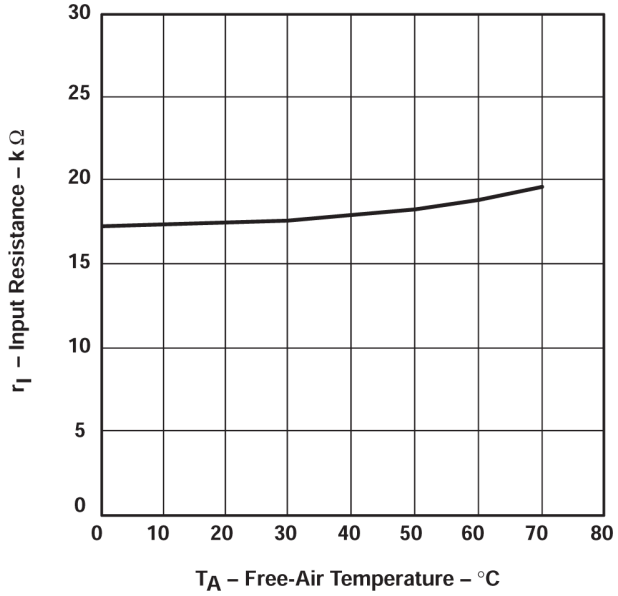

Figure 5-16. Input Resistance vs Free-air Temperature

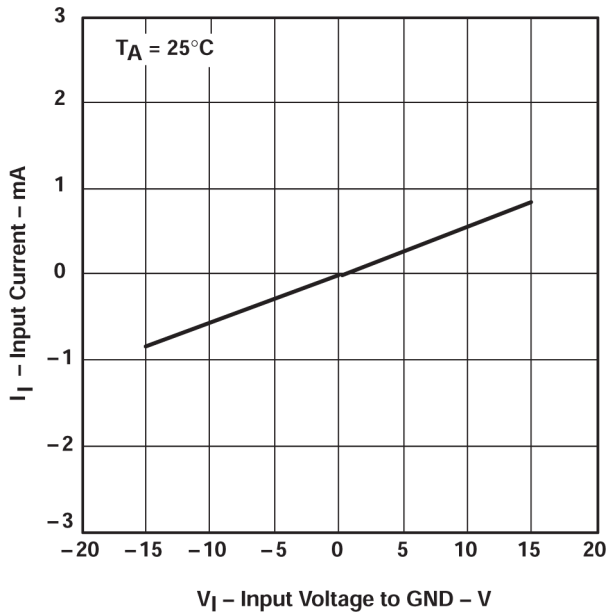

Figure 5-17. Input Current vs Input Voltage to Gnd

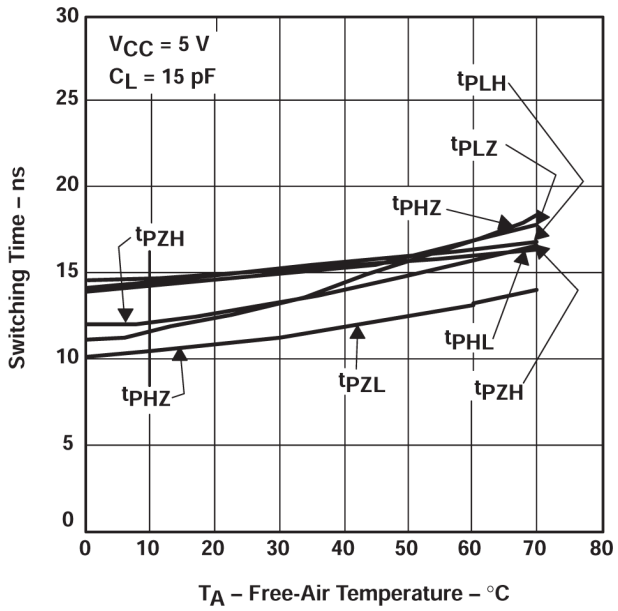

Figure 5-18. Switching Time vs Free-air Temperature

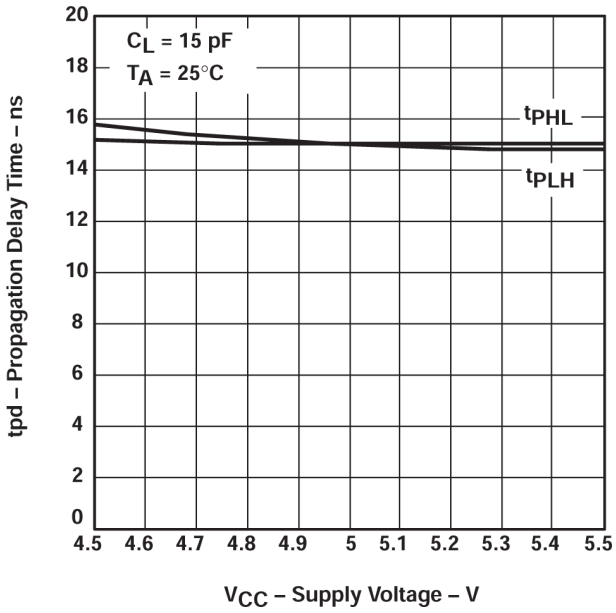

Figure 5-19. Propagation Delay Time vs Supply Voltage

Copyright © 2023 Texas Instruments Incorporated

6 Parameter Measurement Information

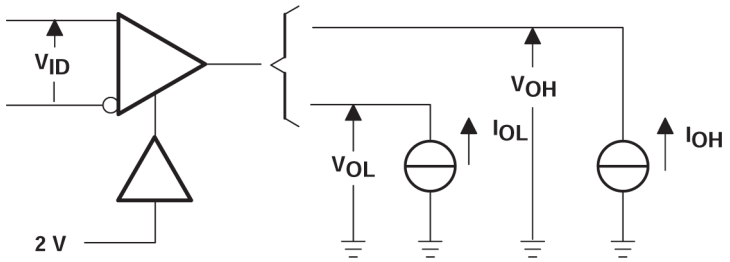

Figure 6-1. V_{OH} and V_{OL} Test Circuit

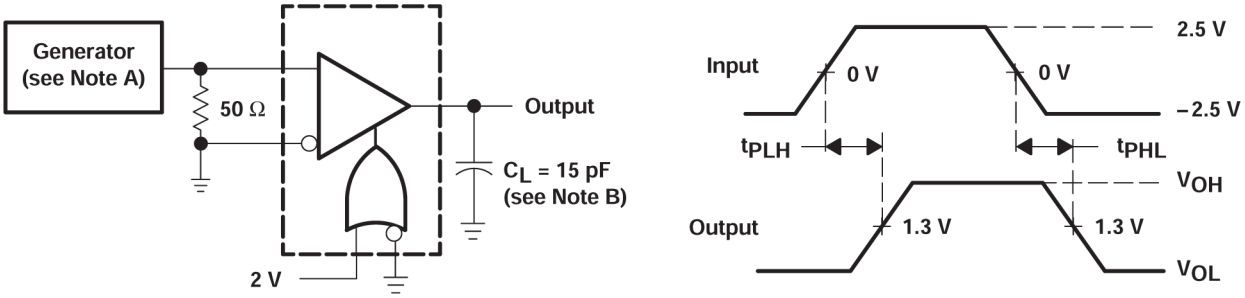

A. The input pulse is supplied by a generator having the following characteristics: PRR ≤ 1 MHz, duty cycle ≤ 50%, Z_O = 50 Ω, t_r ≤ 6 ns, t_f ≤ 6 ns.

B. C_L includes probe and jig capacitance.

Figure 6-2. t_{PLH} And T_{PHL} Test Circuit and Voltage Waveforms

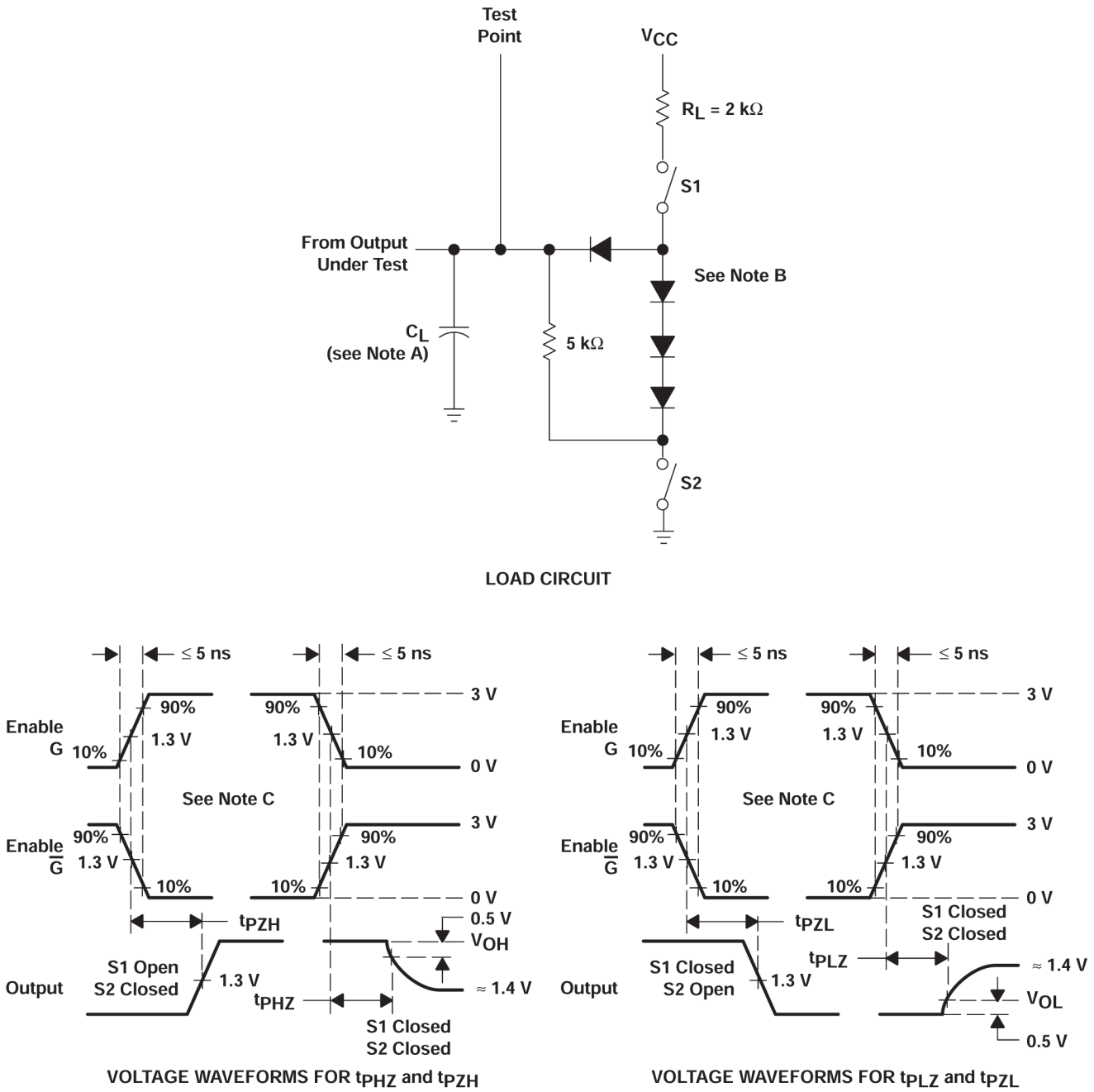

NOTES: A. C_L includes probe and jig capacitance.
B. All diodes are 1N3064 or equivalent.
C. Enable G is tested with $\overline{G}$ high; $\overline{G}$ is tested with G low.

A. C_L includes probe and jig capacitance.
B. All diodes are 1N3064 or equivalent.
C. Enable G is tested with $\overline{G}$ high; $\overline{G}$ is tested with G low.

Figure 6-3. t_{PHZ}, T_{PZH}, T_{PLZ}, and T_{PZL} Load Circuit and Voltage Waveforms

Copyright © 2023 Texas Instruments Incorporated

7 Detailed Description

7.1 Device Functional Modes

Table 7-1. Function Table (each receiver)

DIFFERENTIAL INPUTS A–B	ENABLES[1]		OUTPUT Y
	G	$\overline{G}$	
$V_{ID} \geq 0.3$ V	H	X	H
	X	L	H
-0.3 V < V_{ID} < 0.3 V	H	X	?
	X	L	?
$V_{ID} \leq -0.3$ V	H	X	L
	X	L	L
X	L	H	Z
Open	H	X	H
	X	L	H

(1) H = high level, L = low level, X = irrelevant, ? = indeterminate, Z = high impedance (off)

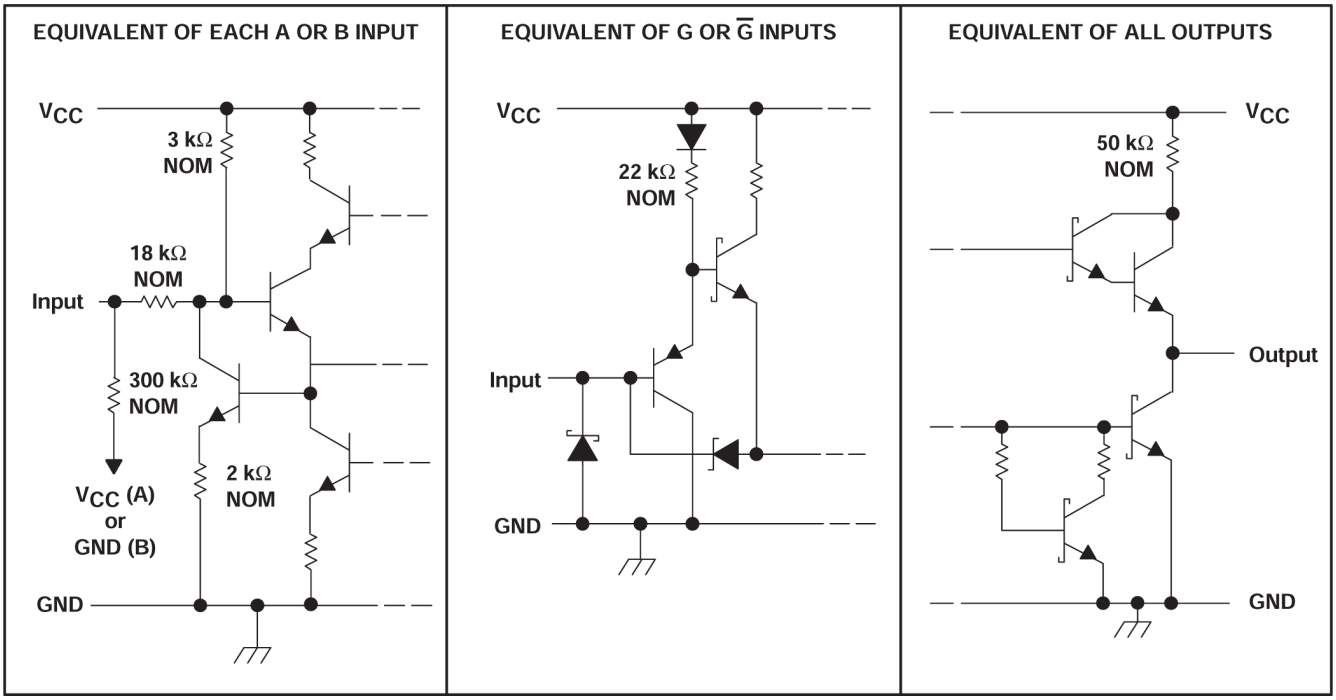

Figure 7-1. Schematics of Inputs and Outputs

8 Device and Documentation Support

TI offers an extensive line of development tools. Tools and software to evaluate the performance of the device, generate code, and develop solutions are listed below.

8.1 Receiving Notification of Documentation Updates

To receive notification of documentation updates, navigate to the device product folder on ti.com. Click on *Subscribe to updates* to register and receive a weekly digest of any product information that has changed. For change details, review the revision history included in any revised document.

8.2 Support Resources

TI E2E™ support forums are an engineer's go-to source for fast, verified answers and design help — straight from the experts. Search existing answers or ask your own question to get the quick design help you need.

Linked content is provided "AS IS" by the respective contributors. They do not constitute TI specifications and do not necessarily reflect TI's views; see TI's Terms of Use.

8.3 Trademarks

TI E2E™ is a trademark of Texas Instruments.
All trademarks are the property of their respective owners.

8.4 Electrostatic Discharge Caution

This integrated circuit can be damaged by ESD. Texas Instruments recommends that all integrated circuits be handled with appropriate precautions. Failure to observe proper handling and installation procedures can cause damage.

ESD damage can range from subtle performance degradation to complete device failure. Precision integrated circuits may be more susceptible to damage because very small parametric changes could cause the device not to meet its published specifications.

8.5 Glossary

TI Glossary	This glossary lists and explains terms, acronyms, and definitions.

9 Revision History

NOTE: Page numbers for previous revisions may differ from page numbers in the current version.

Changes from Revision B (May 1995) to Revision C (October 2023)	Page
• Changed the numbering format for tables, figures, and cross-references throughout the document	1

10 Mechanical, Packaging, and Orderable Information

The following pages include mechanical, packaging, and orderable information. This information is the most current data available for the designated devices. This data is subject to change without notice and revision of this document. For browser-based versions of this data sheet, refer to the left-hand navigation.

Copyright © 2023 Texas Instruments Incorporated

PACKAGING INFORMATION

Orderable part number	Status (1)	Material type (2)	Package | Pins	Package qty | Carrier	RoHS (3)	Lead finish/ Ball material (4)	MSL rating/ Peak reflow (5)	Op temp (°C)	Part marking (6)
SN75ALS197D	Obsolete	Production	SOIC (D) | 16	-	-	Call TI	Call TI	0 to 70	75ALS197
SN75ALS197DR	Active	Production	SOIC (D) | 16	2500 | LARGE T&R	Yes	NIPDAU	Level-1-260C-UNLIM	0 to 70	75ALS197
SN75ALS197DR.A	Active	Production	SOIC (D) | 16	2500 | LARGE T&R	Yes	NIPDAU	Level-1-260C-UNLIM	0 to 70	75ALS197
SN75ALS197N	Active	Production	PDIP (N) | 16	25 | TUBE	Yes	NIPDAU	N/A for Pkg Type	0 to 70	SN75ALS197N
SN75ALS197N.A	Active	Production	PDIP (N) | 16	25 | TUBE	Yes	NIPDAU	N/A for Pkg Type	0 to 70	SN75ALS197N
SN75ALS197NSR	Active	Production	SOP (NS) | 16	2000 | LARGE T&R	Yes	NIPDAU	Level-1-260C-UNLIM	0 to 70	75ALS197
SN75ALS197NSR.A	Active	Production	SOP (NS) | 16	2000 | LARGE T&R	Yes	NIPDAU	Level-1-260C-UNLIM	0 to 70	75ALS197

(1) **Status:** For more details on status, see our product life cycle.

(2) **Material type:** When designated, preproduction parts are prototypes/experimental devices, and are not yet approved or released for full production. Testing and final process, including without limitation quality assurance, reliability performance testing, and/or process qualification, may not yet be complete, and this item is subject to further changes or possible discontinuation. If available for ordering, purchases will be subject to an additional waiver at checkout, and are intended for early internal evaluation purposes only. These items are sold without warranties of any kind.

(3) **RoHS values:** Yes, No, RoHS Exempt. See the TI RoHS Statement for additional information and value definition.

(4) **Lead finish/Ball material:** Parts may have multiple material finish options. Finish options are separated by a vertical ruled line. Lead finish/Ball material values may wrap to two lines if the finish value exceeds the maximum column width.

(5) **MSL rating/Peak reflow:** The moisture sensitivity level ratings and peak solder (reflow) temperatures. In the event that a part has multiple moisture sensitivity ratings, only the lowest level per JEDEC standards is shown. Refer to the shipping label for the actual reflow temperature that will be used to mount the part to the printed circuit board.

(6) **Part marking:** There may be an additional marking, which relates to the logo, the lot trace code information, or the environmental category of the part.

Multiple part markings will be inside parentheses. Only one part marking contained in parentheses and separated by a "~" will appear on a part. If a line is indented then it is a continuation of the previous line and the two combined represent the entire part marking for that device.

Important Information and Disclaimer: The information provided on this page represents TI's knowledge and belief as of the date that it is provided. TI bases its knowledge and belief on information provided by third parties, and makes no representation or warranty as to the accuracy of such information. Efforts are underway to better integrate information from third parties. TI has taken and continues to take reasonable steps to provide representative and accurate information but may not have conducted destructive testing or chemical analysis on incoming materials and chemicals. TI and TI suppliers consider certain information to be proprietary, and thus CAS numbers and other limited information may not be available for release.

In no event shall TI's liability arising out of such information exceed the total purchase price of the TI part(s) at issue in this document sold by TI to Customer on an annual basis.

TAPE AND REEL INFORMATION

REEL DIMENSIONS

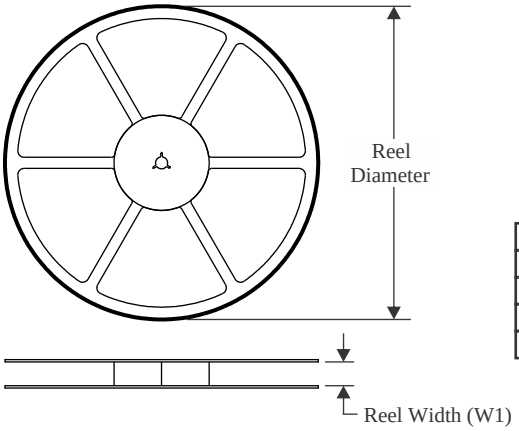

TAPE DIMENSIONS

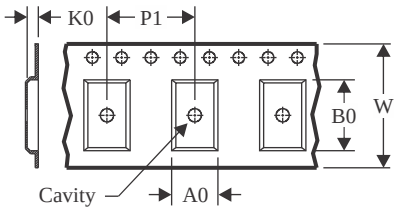

A0	Dimension designed to accommodate the component width
B0	Dimension designed to accommodate the component length
K0	Dimension designed to accommodate the component thickness
W	Overall width of the carrier tape
P1	Pitch between successive cavity centers

QUADRANT ASSIGNMENTS FOR PIN 1 ORIENTATION IN TAPE

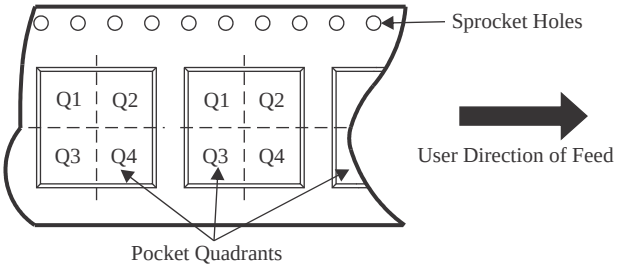

*All dimensions are nominal

Device	Package Type	Package Drawing	Pins	SPQ	Reel Diameter (mm)	Reel Width W1 (mm)	A0 (mm)	B0 (mm)	K0 (mm)	P1 (mm)	W (mm)	Pin1 Quadrant
SN75ALS197DR	SOIC	D	16	2500	330.0	16.4	6.5	10.3	2.1	8.0	16.0	Q1
SN75ALS197NSR	SOP	NS	16	2000	330.0	16.4	8.2	10.5	2.5	12.0	16.0	Q1

TAPE AND REEL BOX DIMENSIONS

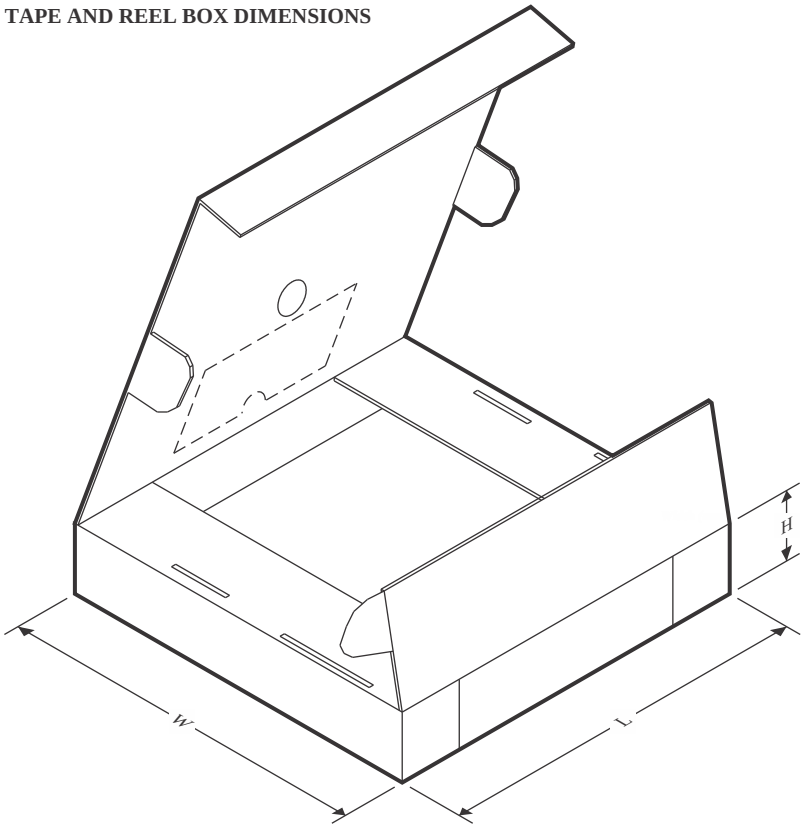

*All dimensions are nominal

Device	Package Type	Package Drawing	Pins	SPQ	Length (mm)	Width (mm)	Height (mm)
SN75ALS197DR	SOIC	D	16	2500	353.0	353.0	32.0
SN75ALS197NSR	SOP	NS	16	2000	356.0	356.0	35.0

TUBE

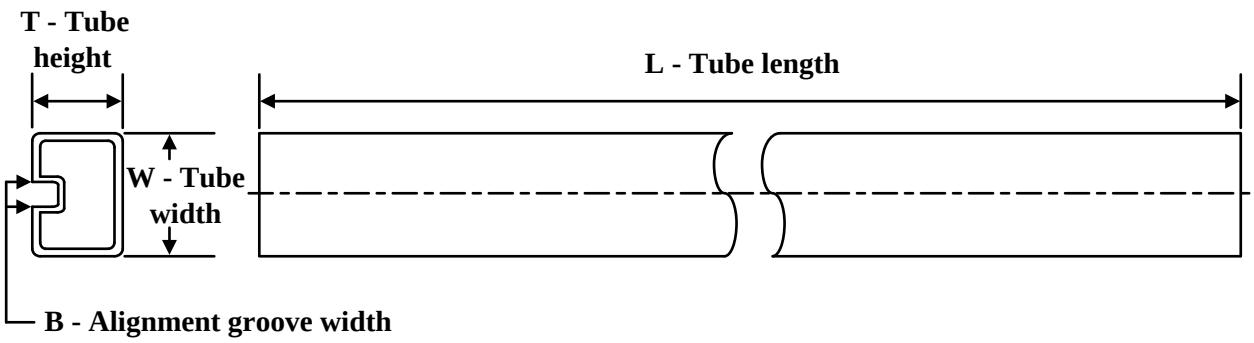

*All dimensions are nominal

Device	Package Name	Package Type	Pins	SPQ	L (mm)	W (mm)	T (µm)	B (mm)
SN75ALS197N	N	PDIP	16	25	506	13.97	11230	4.32
SN75ALS197N.A	N	PDIP	16	25	506	13.97	11230	4.32

D (R–PDSO–G16) PLASTIC SMALL OUTLINE

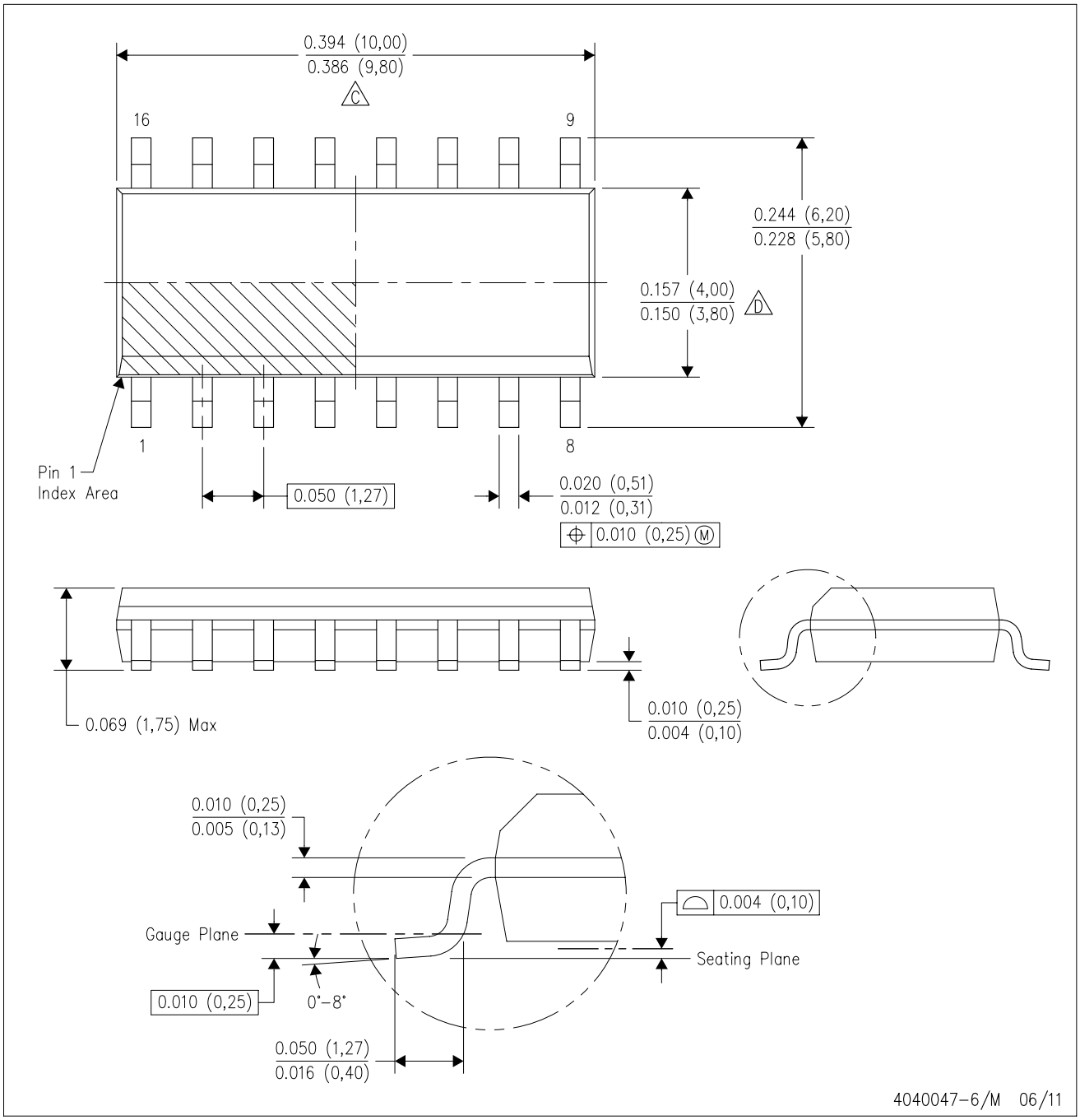

NOTES:
A. All linear dimensions are in inches (millimeters).
B. This drawing is subject to change without notice.
C. Body length does not include mold flash, protrusions, or gate burrs. Mold flash, protrusions, or gate burrs shall not exceed 0.006 (0,15) each side.
D. Body width does not include interlead flash. Interlead flash shall not exceed 0.017 (0,43) each side.
E. Reference JEDEC MS–012 variation AC.

MECHANICAL DATA

NS (R-PDSO-G)** **PLASTIC SMALL-OUTLINE PACKAGE**

14-PINS SHOWN

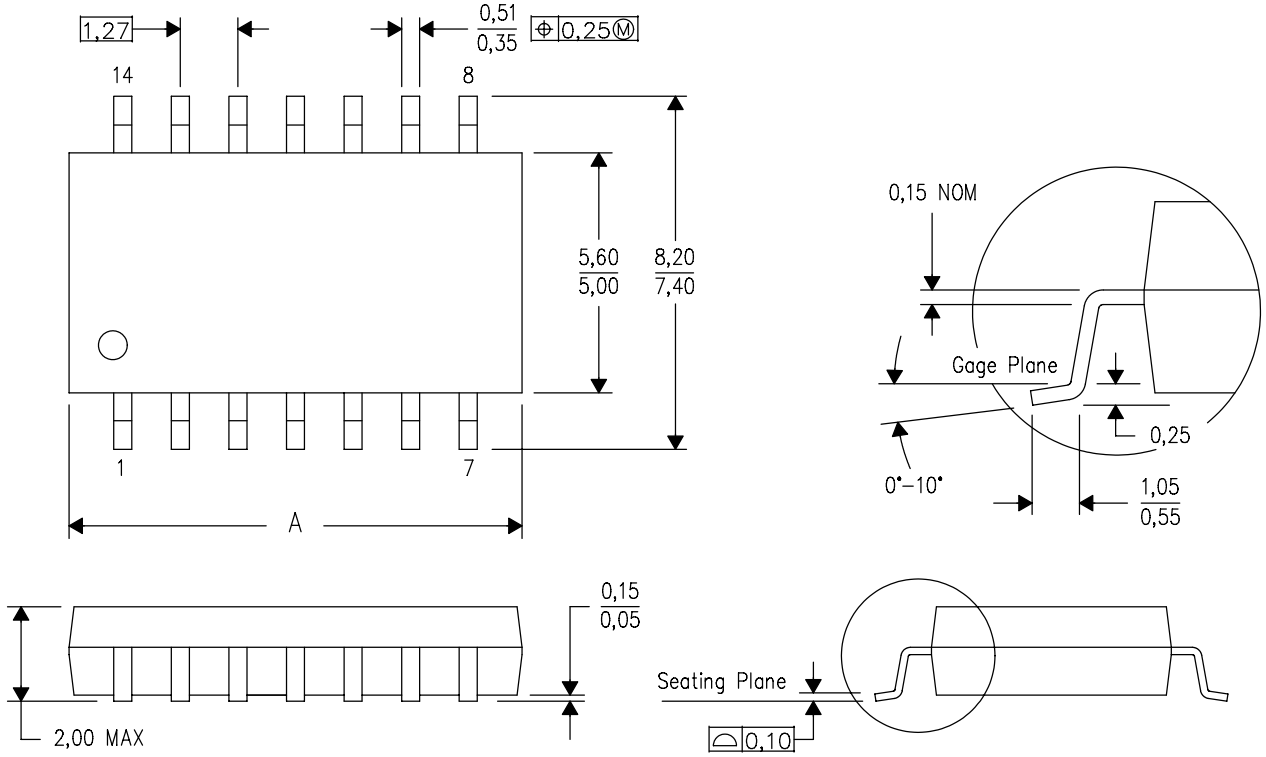

DIM \ PINS **	14	16	20	24
A MAX	10,50	10,50	12,90	15,30
A MIN	9,90	9,90	12,30	14,70

4040062/C 03/03

NOTES:
A. All linear dimensions are in millimeters.
B. This drawing is subject to change without notice.
C. Body dimensions do not include mold flash or protrusion, not to exceed 0,15.

N (R–PDIP–T**) PLASTIC DUAL–IN–LINE PACKAGE

16 PINS SHOWN

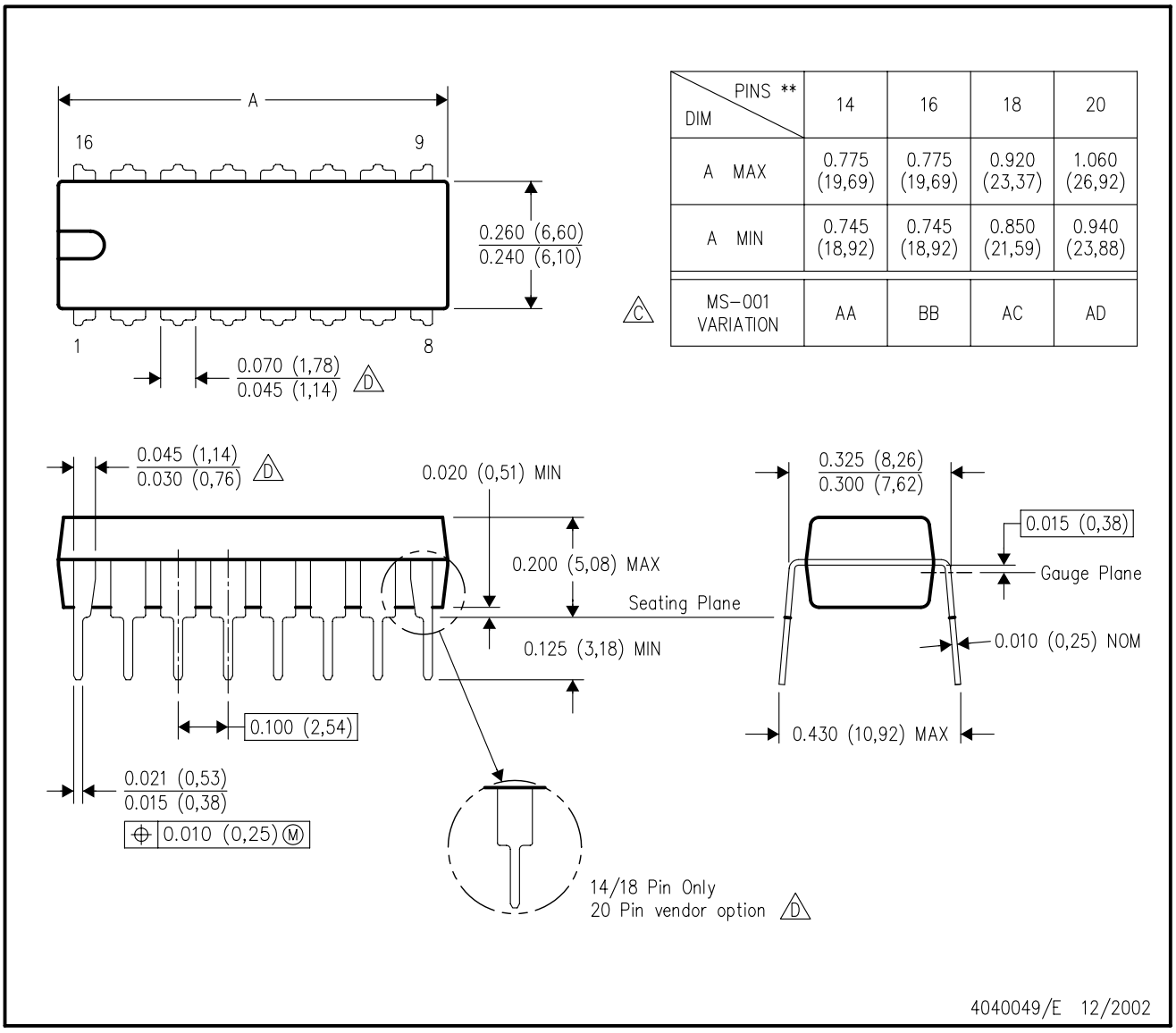

DIM \ PINS **	14	16	18	20
A MAX	0.775 (19,69)	0.775 (19,69)	0.920 (23,37)	1.060 (26,92)
A MIN	0.745 (18,92)	0.745 (18,92)	0.850 (21,59)	0.940 (23,88)
MS–001 VARIATION (C)	AA	BB	AC	AD

NOTES:
A. All linear dimensions are in inches (millimeters).
B. This drawing is subject to change without notice.
C. Falls within JEDEC MS–001, except 18 and 20 pin minimum body length (Dim A).
D. The 20 pin end lead shoulder width is a vendor option, either half or full width.

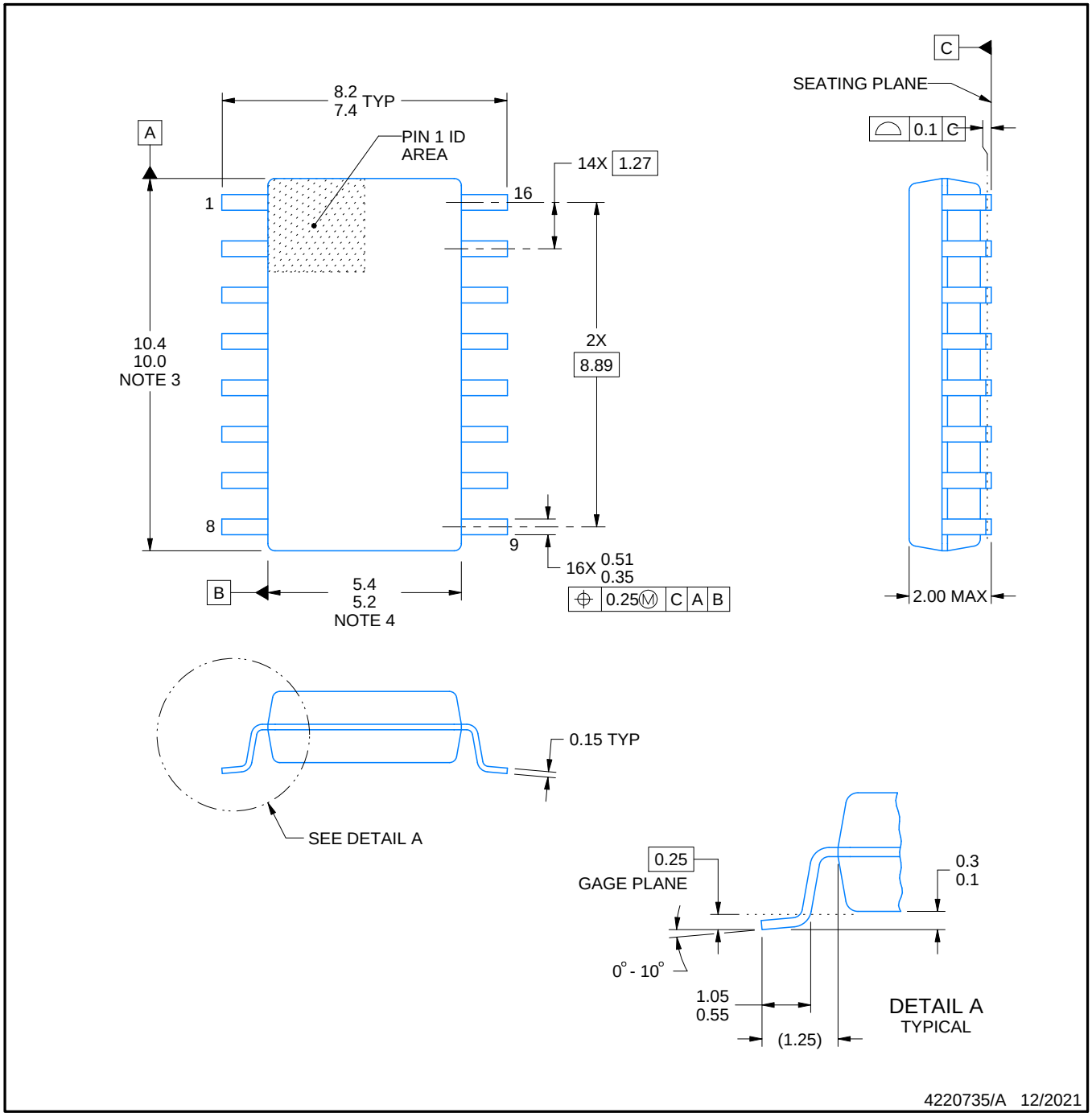

NOTES:

1. All linear dimensions are in millimeters. Dimensions in parenthesis are for reference only. Dimensioning and tolerancing per ASME Y14.5M.
2. This drawing is subject to change without notice.
3. This dimension does not include mold flash, protrusions, or gate burrs. Mold flash, protrusions, or gate burrs shall not exceed 0.15 mm, per side.
4. This dimension does not include interlead flash. Interlead flash shall not exceed 0.25 mm, per side.

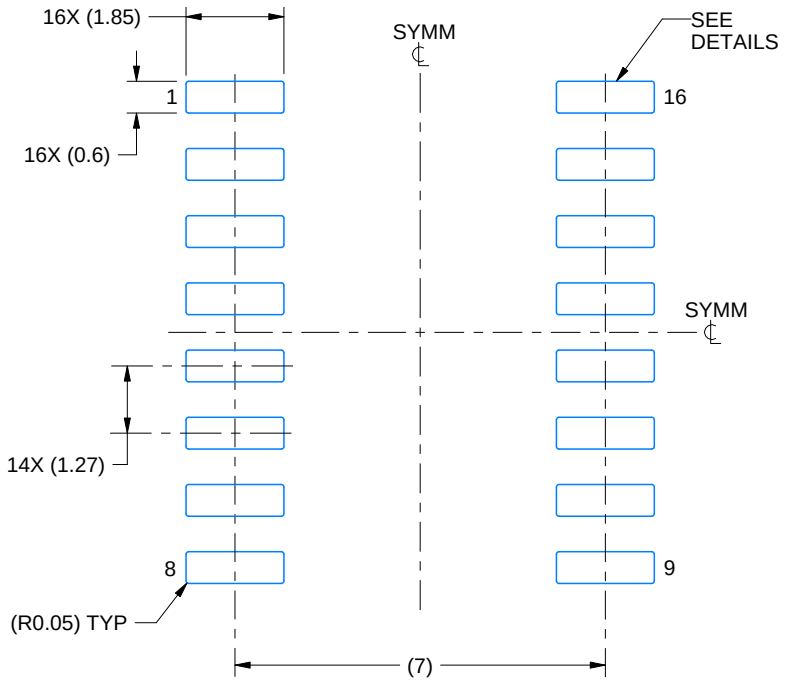

LAND PATTERN EXAMPLE
SCALE:7X

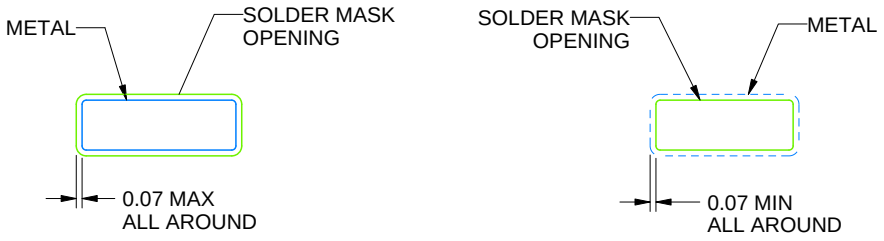

NON SOLDER MASK DEFINED

SOLDER MASK DEFINED

SOLDER MASK DETAILS

4220735/A 12/2021

NOTES: (continued)

5. Publication IPC-7351 may have alternate designs.
6. Solder mask tolerances between and around signal pads can vary based on board fabrication site.

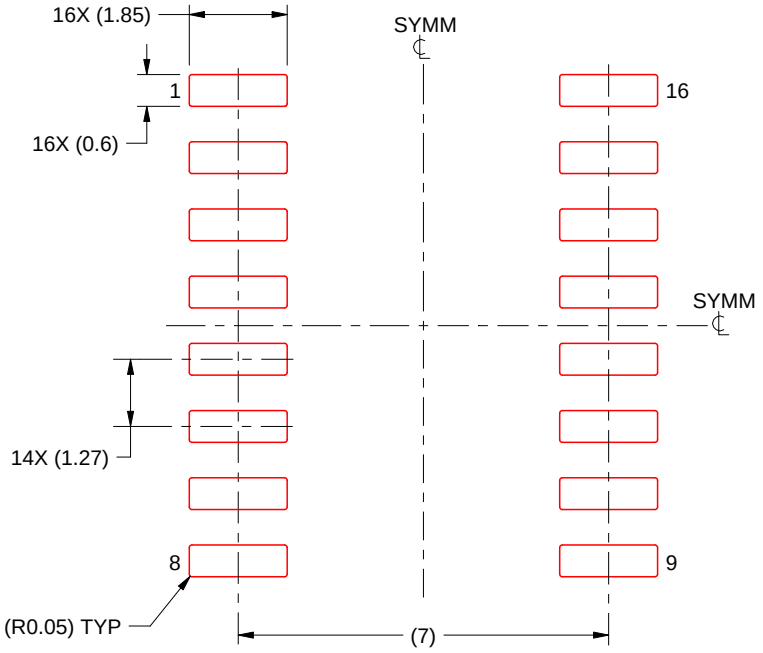

SOLDER PASTE EXAMPLE
BASED ON 0.125 mm THICK STENCIL
SCALE:7X

4220735/A 12/2021

NOTES: (continued)

7. Laser cutting apertures with trapezoidal walls and rounded corners may offer better paste release. IPC-7525 may have alternate design recommendations.
8. Board assembly site may have different recommendations for stencil design.

IMPORTANT NOTICE AND DISCLAIMER

TI PROVIDES TECHNICAL AND RELIABILITY DATA (INCLUDING DATA SHEETS), DESIGN RESOURCES (INCLUDING REFERENCE DESIGNS), APPLICATION OR OTHER DESIGN ADVICE, WEB TOOLS, SAFETY INFORMATION, AND OTHER RESOURCES “AS IS” AND WITH ALL FAULTS, AND DISCLAIMS ALL WARRANTIES, EXPRESS AND IMPLIED, INCLUDING WITHOUT LIMITATION ANY IMPLIED WARRANTIES OF MERCHANTABILITY, FITNESS FOR A PARTICULAR PURPOSE OR NON-INFRINGEMENT OF THIRD PARTY INTELLECTUAL PROPERTY RIGHTS.

These resources are intended for skilled developers designing with TI products. You are solely responsible for (1) selecting the appropriate TI products for your application, (2) designing, validating and testing your application, and (3) ensuring your application meets applicable standards, and any other safety, security, regulatory or other requirements.

These resources are subject to change without notice. TI grants you permission to use these resources only for development of an application that uses the TI products described in the resource. Other reproduction and display of these resources is prohibited. No license is granted to any other TI intellectual property right or to any third party intellectual property right. TI disclaims responsibility for, and you will fully indemnify TI and its representatives against, any claims, damages, costs, losses, and liabilities arising out of your use of these resources.

TI’s products are provided subject to TI’s Terms of Sale or other applicable terms available either on ti.com or provided in conjunction with such TI products. TI’s provision of these resources does not expand or otherwise alter TI’s applicable warranties or warranty disclaimers for TI products.

TI objects to and rejects any additional or different terms you may have proposed.

Mailing Address: Texas Instruments, Post Office Box 655303, Dallas, Texas 75265
Copyright © 2025, Texas Instruments Incorporated