CDx4AC273, CDx4ACT273 Octal D Flip-Flop with Reset

1 Features

- Buffered inputs
- Typical propagation delay
  - 6.5ns at V_{CC} = 5V, T_A = 25°C, C_L = 50pF
- SCR-latchup-resistant CMOS process and circuit design
- Speed of Bipolar FAST™/AS/S with significantly reduced power consumption
- Balanced propagation delays
- AC types feature 1.5v to 5.5v operation and balanced noise immunity at 30% of the supply
- ±24mA output drive current
  - Fanout to 15 FAST™ ICs
  - Drives 50Ω transmission lines

2 Description

The ’AC273 and ’ACT273 devices are octal D-type flip-flops with reset that utilize advanced CMOS logic technology. Information at the D input is transferred to the Q output on the positive-going edge of the clock pulse. All eight flip-flops are controlled by a common clock (CP) and a common reset ($\overline{MR}$). Resetting is accomplished by a low voltage level independent of the clock.

Device Information

PART NUMBER	PACKAGE(1)	PACKAGE SIZE(2)	BODY SIZE(3)
CD74AC273/ CD74ACT273	DW (SOIC, 20)	12.8 mm x 10.3 mm	12.8 mm x 7.5 mm
	DB (SSOP, 20)	7.2 mm x 7.8 mm	7.2 mm x 5.3 mm
	N (PDIP, 20)	24.33 mm x 9.4 mm	24.33 mm x 6.35 mm
	PW (TSSOP, 20)	5.00 mm x 6.4 mm	5.00 mm x 4.4 mm

(1) For more information, see Section 10.
(2) The package size (length × width) is a nominal value and includes pins, where applicable.
(3) The body size (length × width) is a nominal value and does not include pins.

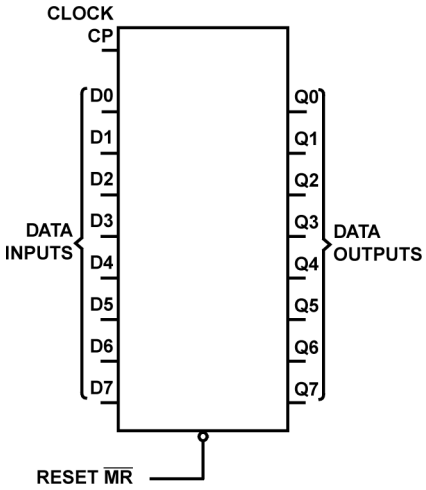

Functional Block Diagram

An IMPORTANT NOTICE at the end of this data sheet addresses availability, warranty, changes, use in safety-critical applications, intellectual property matters and other important disclaimers. PRODUCTION DATA.

Table of Contents

1 Features.....1
2 Description.....1
3 Pin Configuration and Functions.....3
4 Specifications.....4
4.1 Absolute Maximum Ratings.....4
4.2 ESD Ratings.....4
4.3 Recommended Operating Conditions.....4
4.4 Thermal Information.....4
4.5 Electrical Characteristics.....5
4.6 Prerequisite for Switching Function.....6
4.7 Switching Characteristics.....7
5 Parameter Measurement Information.....8
6 Detailed Description.....9
6.1 Overview.....9
6.2 Functional Block Diagram.....9
6.3 Device Functional Modes.....9
7 Application and Implementation.....10
7.1 Power Supply Recommendations.....10
7.2 Layout.....10
8 Device and Documentation Support.....11
8.1 Documentation Support (Analog).....11
8.2 Receiving Notification of Documentation Updates.....11
8.3 Support Resources.....11
8.4 Trademarks.....11
8.5 Electrostatic Discharge Caution.....11
8.6 Glossary.....11
9 Revision History.....11
10 Mechanical, Packaging, and Orderable Information.....12

Copyright © 2024 Texas Instruments Incorporated

3 Pin Configuration and Functions

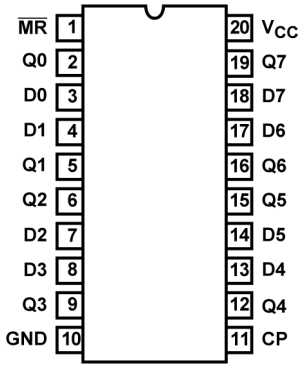

Figure 3-1. CD54AC273, CD54ACT273 (CDIP) CD74AC273, CD74ACT273 (PDIP, SOIC) Top View

Pin Functions

PIN		I/O[(1)]	DESCRIPTION
NO.	NAME		
!MR	1	I	Master reset, active low
Q0	2	O	Output Q0
D0	3	I	Input D0
D1	4	I	Input D1
Q1	5	O	Output Q1
Q2	6	O	Output Q2
D2	7	I	Input D2
D3	8	I	Input D3
Q3	9	O	Output Q3
GND	10	-	Ground
CP	11	I	Clock, rising edge triggered
Q4	12	O	Output Q4
D4	13	I	Input D4
D5	14	I	Input D5
Q5	15	O	Output Q5
Q6	16	O	Output Q6
D6	17	I	Input D6
D7	18	I	Input D7
Q7	19	O	Output Q7
V_{CC}	20	-	Supply

(1) I = input, O = output, I/O = input or output, G = ground, P = power.

Copyright © 2024 Texas Instruments Incorporated

4 Specifications

4.1 Absolute Maximum Ratings

			MIN	MAX	UNIT
V_{CC}	DC Supply Voltage		-0.5	6	V
I_{IK}	DC Input Diode Current	V_I < -0.5V or V_I > V_{CC} + 0.5V		±20	mA
I_{OK}	DC Output Diode Current	V_O < -0.5V or V_O > V_{CC} + 0.5V		±50	mA
I_O	DC Output Source or Sink Current per Output Pin	V_O > -0.5V or V_O < V_{CC} + 0.5V		±50	mA
	DC V_{CC} or Ground Current, I_{CC} or I_{GND} (1)			±100	mA
T_{stg}	Storage temperature		–65	150	°C

(1) For up to 4 outputs per device, add ±25mA for each additional output.

Stresses above those listed in “Absolute Maximum Ratings” may cause permanent damage to the device. This is a stress only rating and operation of the device at these or any other conditions above those indicated in the operational sections of this specification is not implied.

4.2 ESD Ratings

			VALUE	UNIT
$V_{(ESD)}$	Electrostatic discharge	Human-body model (HBM), per ANSI/ESDA/JEDEC JS-001(1)	±2000	V

(1) JEDEC document JEP155 states that 500-V HBM allows safe manufacturing with a standard ESD control process.

4.3 Recommended Operating Conditions

			MIN	MAX	UNIT
T_A	Temperature Range		-55	125	°C
V_{CC} (1)	Supply Voltage Range				
	AC Types		1.5	5.5	V
	ACT Types		4.5	5.5	V
V_I, V_O	DC Input or Output Voltage		0	V_{CC}	V
dt/dv	Input Rise and Fall Slew Rate				
	AC Types	1.5V to 3V		50	ns (Max)
	AC Types	3.6V to 5.5V		20	ns (Max)
	ACT Types	4.5V to 5.5V		10	ns (Max)

(1) Unless otherwise specified, all voltages are referenced to ground.

4.4 Thermal Information

THERMAL METRIC(1)		CDx4AC273, CDx4ACT273			UNIT
		N (PDIP)	DW (SOIC)	PW (TSSOP)	
		20 PINS	20 PINS	20 PINS	
θ_{JA}	Thermal Resistance	69	101.2	126.2	°C/W

(1) The package thermal impedance is calculated in accordance with JESD 51.

Copyright © 2024 Texas Instruments Incorporated

4.5 Electrical Characteristics

PARAMETER		TEST CONDITIONS		V_{CC} (V)	25°C		-40°C TO 85 °C		-55°C TO 125°C		UNITS
		V_I (V)	I_O (mA)		MIN	MAX	MIN	MAX	MIN	MAX	
	AC TYPES										
V_{IH}	High Level Input Voltage	-	-	1.5	1.2	-	1.2	-	1.2	-	V
				3	2.1	-	2.1	-	2.1	-	V
				5.5	3.85	-	3.85	-	3.85	-	V
V_{IL}	Low Level Input Voltage	-	-	1.5	-	0.3	-	0.3	-	0.3	V
				3	-	0.9	-	0.9	-	0.9	V
				5.5	-	1.65	-	1.65	-	1.65	V
V_{OH}	High Level Output Voltage	V_{IH} or V_{IL}	-0.05	1.5	1.4	-	1.4	-	1.4	-	V
			-0.05	3	2.9	-	2.9	-	2.9	-	V
			-0.05	4.5	4.4	-	4.4	-	4.4	-	V
			-4	3	2.58	-	2.48	-	2.4	-	V
			-24	4.5	3.94	-	3.8	-	3.7	-	V
			-75 (1) (2)	5.5	-	-	3.85	-	-	-	V
			-50 (1) (2)	5.5	-	-	-	-	3.85	-	V
V_{OL}	Low Level Output Voltage	V_{IH} or V_{IL}	0.05	1.5	-	0.1	-	0.1	-	0.1	V
			0.05	3	-	0.1	-	0.1	-	0.1	V
			0.05	4.5	-	0.1	-	0.1	-	0.1	V
			12	3	-	0.36	-	0.44	-	0.5	V
			24	4.5	-	0.36	-	0.44	-	0.5	V
			75(1) (2)	5.5	-	-	-	1.65	-	-	V
			50(1) (2)	5.5	-	-	-	-	-	1.65	V
I_I	Input Leakage Current	V_{CC} or GND	-	5.5	-	±0.1	-	±1	-	±1	µA
I_{CC}	Quiescent Supply Current MSI	V_{CC} or GND	0	5.5	-	8	-	80	-	160	µA
	ACT TYPES										
V_{IH}	High Level Input Voltage	-	-	4.5 to 5.5	2	-	2	-	2	-	V
V_{IL}	Low Level Input Voltage	-	-	4.5 to 5.5	-	0.8	-	0.8	-	0.8	V
V_{OH}	High Level Output Voltage	V_{IH} or V_{IL}	-0.05	4.5	4.4	-	4.4	-	4.4	-	V
			-24	4.5	3.94	-	3.8	-	3.7	-	V
			-75(1) (2)	5.5	-	-	3.85	-	-	-	V
			-50(1) (2)	5.5	-	-	-	-	3.85	-	V
V_{OL}	Low Level Output Voltage	V_{IH} or V_{IL}	0.05	4.5	-	0.1	-	0.1	-	0.1	V
			24	4.5	-	0.36	-	0.44	-	0.5	V
			75(1) (2)	5.5	-	-	-	1.65	-	-	V
			50(1) (2)	5.5	-	-	-	-	-	1.65	V
I_I	Input Leakage Current	V_{CC} or GND	-	5.5	-	±0.1	-	±1	-	±1	µA
I_{CC}	Quiescent Supply Current MSI	V_{CC} or GND	0	5.5	-	8	-	80	-	160	µA

Copyright © 2024 Texas Instruments Incorporated

PARAMETER		TEST CONDITIONS		V_{CC} (V)	25°C		-40°C TO 85 °C		-55°C TO 125°C		UNITS
		V_I (V)	I_O (mA)		MIN	MAX	MIN	MAX	MIN	MAX	
ΔI_{CC}	Additional Supply Current per Input Pin TTL Inputs High 1 Unit Load	V_{CC} -2.1	-	4.5 to 5.5	-	2.4	-	2.8	-	3	mA

(1) Test one output at a time for a 1-second maximum duration. Measurement is made by forcing current and measuring voltage to minimize power dissipation.
(2) Test verifies a minimum 50Ω transmission-line-drive capability at 85°C, 75Ω at 125°C.

Table 4-1. ACT Input Load Table

INPUT	UNIT LOAD
Dn	0.5
$\overline{MR}$	0.57
CP	1

4.6 Prerequisite for Switching Function

PARAMETER	SYMBOL	V_{CC} (V)	-40°C TO 85°C		-55°C TO 125°C		UNITS
			MIN	MAX	MIN	MAX	
AC TYPES							
Data to CP Set-Up Time	t_{SU}	1.5	2	-	2	-	ns
		3.3 (1)	2	-	2	-	ns
		5(2)	2	-	2	-	ns
Hold Time	t_H	1.5	2	-	2	-	ns
		3.3	2	-	2	-	ns
		5	2	-	2	-	ns
Removal Time, $\overline{MR}$ to CP	t_{REM}	1.5	2	-	2	-	ns
		3.3	2	-	2	-	ns
		5	2	-	2	-	ns
$\overline{MR}$ Pulse Width	t_W	1.5	55	-	63	-	ns
		3.3	6.1	-	7	-	ns
		5	4.4	-	5	-	ns
CP Pulse Width	t_W	1.5	55	-	63	-	ns
		3.3	6.1	-	7	-	ns
		5	4.4	-	5	-	ns
CP Frequency	f_{MAX}	1.5	9	-	8	-	MHz
		3.3	81	-	71	-	MHz
		5	114	-	100	-	MHz
ACT TYPES							
Data to CP Set-Up Time	t_{SU}	5(2)	2	-	2	-	ns
Hold Time	t_H	5	2	-	2	-	ns
Removal Time $\overline{MR}$ to CP	t_{REM}	5	2	-	2	-	ns
$\overline{MR}$ Pulse Width	t_W	5	4.4	-	5	-	ns
CP Pulse Width	t_W	5	5.3	-	6	-	ns
CP Frequency	f_{MAX}	5	97	-	85	-	MHz

(1) 3.3V Min is at 3.6V, Max is at 3V.
(2) 5V Min is at 5.5V, Max is at 4.5V.

Copyright © 2024 Texas Instruments Incorporated

4.7 Switching Characteristics

Input t_r, t_f = 3ns, C_L = 50pF (Worst Case)

PARAMETER		V_{CC} (V)	-40°C TO 85°C			-55°C TO 125°C			UNITS
			MIN	TYP	MAX	MIN	TYP	MAX	
AC TYPES									
t_{PLH}, t_{PHL}	Propagation Delay, CP to Qn	1.5	-	-	154	-	-	169	ns
		3.3 (1)	4.9	-	17.2	4.7	-	18.9	ns
		5 (2)	3.5	-	12.3	3.4	-	13.5	ns
t_{PLH}, t_{PHL}	Propagation Delay, $\overline{MR}$ to Qn	1.5	-	-	154	-	-	169	ns
		3.3	4.9	-	17.2	4.7	-	18.9	ns
		5	3.5	-	12.3	3.4	-	13.5	ns
C_I	Input Capacitance	-	-	-	10	-	-	10	pF
C_{PD} (3)	Power Dissipation Capacitance	-	-	45	-	-	45	-	pF
	ACT TYPES								
t_{PLH}, t_{PHL}	Propagation Delay, CP to Qn	5(2)	3.5	-	12.3	3.4	-	13.5	ns
t_{PLH}, t_{PHL}	Propagation Delay, $\overline{MR}$ to Qn	5	3.5	-	12.3	3.4	-	13.5	ns
C_I	Input Capacitance	-	-	-	10	-	-	10	pF
C_{PD} q(3)	Power Dissipation Capacitance	-	-	45	-	-	45	-	pF

(1) 3.3V Min is at 3.6V, Max is at 3V.
(2) 5V Min is at 5.5V, Max is at 4.5V.
(3) C_{PD} is used to determine the dynamic power consumption per flip-flop.

Note

AC: $P_D = C_{PD} V_{CC}^2 f_i = \sum (C_L V_{CC}^2 f_o)$

ACT: $P_D = C_{PD} V_{CC}^2 f_i + \sum (C_L V_{CC}^2 f_o) + V_{CC} \Delta I_{CC}$ where f_i = input frequency, f_o = output frequency, C_L = output load capacitance, V_{CC} = supply voltage.

5 Parameter Measurement Information

Load Circuit and Voltage Waveforms

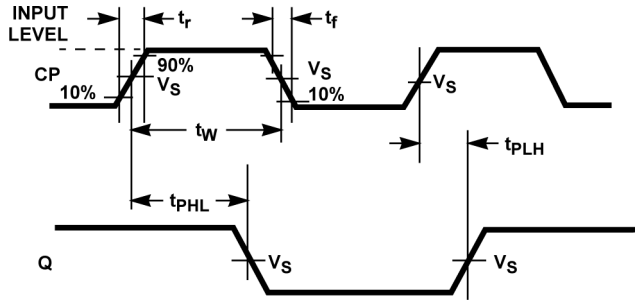

Propagation Delay Times and Clock Pulse Width

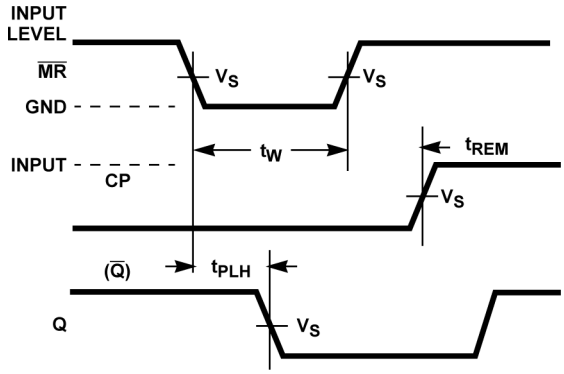

Prerequisite and Propagation Delay Times for Master Reset

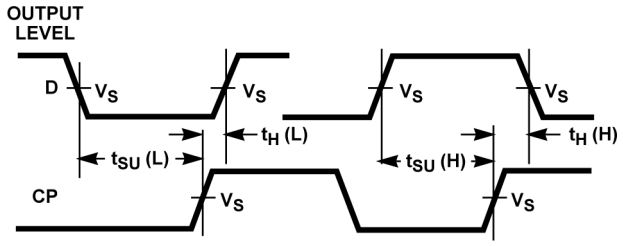

Prerequisite for Clock

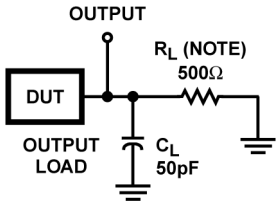

A. For AC Series Only: When V_{CC} = 1.5V, R_L = 1kΩ.

Propagation Delay Times

	AC	ACT
Input Level	V_{CC}	3V
Input Switching Voltage, V_S	0.5 V_{CC}	1.5V
Output Switching Voltage, V_S	0.5 V_{CC}	0.5 V_{CC}

Copyright © 2024 Texas Instruments Incorporated

6 Detailed Description

6.1 Overview

The ’AC273 and ’ACT273 devices are octal D-type flip-flops with reset that utilize advanced CMOS logic technology. Information at the D input is transferred to the Q output on the positive-going edge of the clock pulse. All eight flip-flops are controlled by a common clock (CP) and a common reset ($\overline{MR}$). Resetting is accomplished by a low voltage level independent of the clock.

6.2 Functional Block Diagram

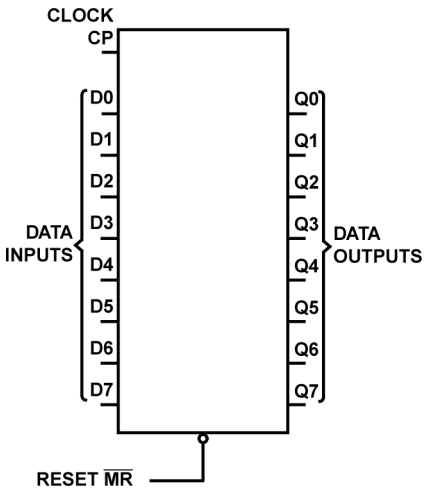

6.3 Device Functional Modes

Table 6-1. Truth Table

INPUTS			OUTPUTS
RESET ($\overline{MR}$)	CLOCK CP	DATA Dn	Qn
L	X	X	L
H	↑	H	H
H	↑	L	L
H	L	X	Q0

7 Application and Implementation

Note

Information in the following applications sections is not part of the TI component specification, and TI does not warrant its accuracy or completeness. TI's customers are responsible for determining suitability of components for their purposes, as well as validating and testing their design implementation to confirm system functionality.

7.1 Power Supply Recommendations

The power supply can be any voltage between the min and max supply voltage rating located in *Section 4.3*.

Each V_{CC} terminal should have a good bypass capacitor to prevent power disturbance. For devices with a single supply, TI recommends 0.1 µF and if there are multiple V_{CC} terminals, then TI recommends .01 µF or .022 µF for each power terminal. It is okay to parallel multiple bypass capacitors to reject different frequencies of noise. A 0.1 µF and 1 µF are commonly used in parallel. The bypass capacitor should be installed as close to the power terminal as possible for best results.

7.2 Layout

7.2.1 Layout Guidelines

When using multiple bit logic devices inputs should not ever float. In many cases, functions or parts of functions of digital logic devices are unused, for example, when only two inputs of a triple-input AND gate are used or only three of the four buffer gates are used. Such input pins should not be left unconnected because the undefined voltages at the outside connections result in undefined operational states. Specified below are the rules that must be observed under all circumstances. All unused inputs of digital logic devices must be connected to a high or low bias to prevent them from floating. The logic level that should be applied to any particular unused input depends on the function of the device. Generally they will be tied to GND or V_{CC} whichever make more sense or is more convenient. Floating outputs is generally acceptable, unless the part is a transceiver. If the transceiver has an output enable pin it will disable the outputs section of the part when asserted. This will not disable the input section of the I.O's so they also cannot float when disabled.

Copyright © 2024 Texas Instruments Incorporated

8 Device and Documentation Support

8.1 Documentation Support (Analog)

8.1.1 Related Documentation

The table below lists quick access links. Categories include technical documents, support and community resources, tools and software, and quick access to sample or buy.

Table 8-1. Related Links

PARTS	PRODUCT FOLDER	SAMPLE & BUY	TECHNICAL DOCUMENTS	TOOLS & SOFTWARE	SUPPORT & COMMUNITY
CD54AC273	Click here	Click here	Click here	Click here	Click here
CD74AC273	Click here	Click here	Click here	Click here	Click here
CD54ACT273	Click here	Click here	Click here	Click here	Click here
CD74ACT273	Click here	Click here	Click here	Click here	Click here

8.2 Receiving Notification of Documentation Updates

To receive notification of documentation updates, navigate to the device product folder on ti.com. Click on *Notifications* to register and receive a weekly digest of any product information that has changed. For change details, review the revision history included in any revised document.

8.3 Support Resources

TI E2E™ support forums are an engineer's go-to source for fast, verified answers and design help — straight from the experts. Search existing answers or ask your own question to get the quick design help you need.

Linked content is provided "AS IS" by the respective contributors. They do not constitute TI specifications and do not necessarily reflect TI's views; see TI's Terms of Use.

8.4 Trademarks

TI E2E™ is a trademark of Texas Instruments.
All trademarks are the property of their respective owners.

8.5 Electrostatic Discharge Caution

This integrated circuit can be damaged by ESD. Texas Instruments recommends that all integrated circuits be handled with appropriate precautions. Failure to observe proper handling and installation procedures can cause damage.

ESD damage can range from subtle performance degradation to complete device failure. Precision integrated circuits may be more susceptible to damage because very small parametric changes could cause the device not to meet its published specifications.

8.6 Glossary

TI Glossary — This glossary lists and explains terms, acronyms, and definitions.

9 Revision History

NOTE: Page numbers for previous revisions may differ from page numbers in the current version.

Changes from Revision B (November 1998) to Revision C (May 2024) **Page**

- Added *Device Information* table, *Pin Functions* table, *ESD Ratings* table, *Thermal Information* table, *Device Functional Modes, Device and Documentation Support* section, and *Mechanical, Packaging, and Orderable Information* section 1
- Updated RθJA values: DW = 58 to 101.2; added PW = 126.2, all values in °C/W 4

10 Mechanical, Packaging, and Orderable Information

The following pages include mechanical, packaging, and orderable information. This information is the most current data available for the designated devices. This data is subject to change without notice and revision of this document. For browser-based versions of this data sheet, refer to the left-hand navigation.

Copyright © 2024 Texas Instruments Incorporated

PACKAGING INFORMATION

Orderable part number	Status (1)	Material type (2)	Package | Pins	Package qty | Carrier	RoHS (3)	Lead finish/ Ball material (4)	MSL rating/ Peak reflow (5)	Op temp (°C)	Part marking (6)
CD54AC273F3A	Active	Production	CDIP (J) | 20	20 | TUBE	No	SNPB	N/A for Pkg Type	-55 to 125	CD54AC273F3A
CD54AC273F3A.A	Active	Production	CDIP (J) | 20	20 | TUBE	No	SNPB	N/A for Pkg Type	-55 to 125	CD54AC273F3A
CD54ACT273F3A	Active	Production	CDIP (J) | 20	20 | TUBE	No	SNPB	N/A for Pkg Type	-55 to 125	CD54ACT273F3A
CD54ACT273F3A.A	Active	Production	CDIP (J) | 20	20 | TUBE	No	SNPB	N/A for Pkg Type	-55 to 125	CD54ACT273F3A
CD74AC273E	Active	Production	PDIP (N) | 20	20 | TUBE	Yes	NIPDAU	N/A for Pkg Type	-55 to 125	CD74AC273E
CD74AC273E.A	Active	Production	PDIP (N) | 20	20 | TUBE	Yes	NIPDAU	N/A for Pkg Type	-55 to 125	CD74AC273E
CD74AC273M96	Active	Production	SOIC (DW) | 20	2000 | LARGE T&R	Yes	NIPDAU	Level-1-260C-UNLIM	-55 to 125	AC273M
CD74AC273M96.A	Active	Production	SOIC (DW) | 20	2000 | LARGE T&R	Yes	NIPDAU	Level-1-260C-UNLIM	-55 to 125	AC273M
CD74ACT273E	Active	Production	PDIP (N) | 20	20 | TUBE	Yes	NIPDAU	N/A for Pkg Type	-55 to 125	CD74ACT273E
CD74ACT273E.A	Active	Production	PDIP (N) | 20	20 | TUBE	Yes	NIPDAU	N/A for Pkg Type	-55 to 125	CD74ACT273E
CD74ACT273EE4	Active	Production	PDIP (N) | 20	20 | TUBE	Yes	NIPDAU	N/A for Pkg Type	-55 to 125	CD74ACT273E
CD74ACT273M	Obsolete	Production	SOIC (DW) | 20	-	-	Call TI	Call TI	-55 to 125	ACT273M
CD74ACT273M96	Active	Production	SOIC (DW) | 20	2000 | LARGE T&R	Yes	NIPDAU	Level-1-260C-UNLIM	-55 to 125	ACT273M
CD74ACT273M96.A	Active	Production	SOIC (DW) | 20	2000 | LARGE T&R	Yes	NIPDAU	Level-1-260C-UNLIM	-55 to 125	ACT273M
CD74ACT273M96E4	Active	Production	SOIC (DW) | 20	2000 | LARGE T&R	Yes	NIPDAU	Level-1-260C-UNLIM	-55 to 125	ACT273M
CD74ACT273PW	Obsolete	Production	TSSOP (PW) | 20	-	-	Call TI	Call TI	-55 to 125	HM273
CD74ACT273PWR	Active	Production	TSSOP (PW) | 20	2000 | LARGE T&R	Yes	NIPDAU | NIPDAU	Level-1-260C-UNLIM	-55 to 125	HM273
CD74ACT273PWR.A	Active	Production	TSSOP (PW) | 20	2000 | LARGE T&R	Yes	NIPDAU	Level-1-260C-UNLIM	-55 to 125	HM273
CD74ACT273SM96	Active	Production	SSOP (DB) | 20	2000 | LARGE T&R	Yes	NIPDAU | NIPDAU	Level-1-260C-UNLIM	-55 to 125	ACT273SM
CD74ACT273SM96.A	Active	Production	SSOP (DB) | 20	2000 | LARGE T&R	Yes	NIPDAU	Level-1-260C-UNLIM	-55 to 125	ACT273SM

(1) **Status:** For more details on status, see our product life cycle.

(2) **Material type:** When designated, preproduction parts are prototypes/experimental devices, and are not yet approved or released for full production. Testing and final process, including without limitation quality assurance, reliability performance testing, and/or process qualification, may not yet be complete, and this item is subject to further changes or possible discontinuation. If available for ordering, purchases will be subject to an additional waiver at checkout, and are intended for early internal evaluation purposes only. These items are sold without warranties of any kind.

(3) **RoHS values:** Yes, No, RoHS Exempt. See the TI RoHS Statement for additional information and value definition.

(4) **Lead finish/Ball material:** Parts may have multiple material finish options. Finish options are separated by a vertical ruled line. Lead finish/Ball material values may wrap to two lines if the finish value exceeds the maximum column width.

(5) **MSL rating/Peak reflow:** The moisture sensitivity level ratings and peak solder (reflow) temperatures. In the event that a part has multiple moisture sensitivity ratings, only the lowest level per JEDEC standards is shown. Refer to the shipping label for the actual reflow temperature that will be used to mount the part to the printed circuit board.

(6) **Part marking:** There may be an additional marking, which relates to the logo, the lot trace code information, or the environmental category of the part.

Multiple part markings will be inside parentheses. Only one part marking contained in parentheses and separated by a "~" will appear on a part. If a line is indented then it is a continuation of the previous line and the two combined represent the entire part marking for that device.

Important Information and Disclaimer: The information provided on this page represents TI's knowledge and belief as of the date that it is provided. TI bases its knowledge and belief on information provided by third parties, and makes no representation or warranty as to the accuracy of such information. Efforts are underway to better integrate information from third parties. TI has taken and continues to take reasonable steps to provide representative and accurate information but may not have conducted destructive testing or chemical analysis on incoming materials and chemicals. TI and TI suppliers consider certain information to be proprietary, and thus CAS numbers and other limited information may not be available for release.

In no event shall TI's liability arising out of such information exceed the total purchase price of the TI part(s) at issue in this document sold by TI to Customer on an annual basis.

OTHER QUALIFIED VERSIONS OF CD54AC273, CD54ACT273, CD74AC273, CD74ACT273 :

- Catalog : CD74AC273, CD74ACT273
- Military : CD54AC273, CD54ACT273

NOTE: Qualified Version Definitions:

- Catalog - TI's standard catalog product
- Military - QML certified for Military and Defense Applications

TAPE AND REEL INFORMATION

REEL DIMENSIONS

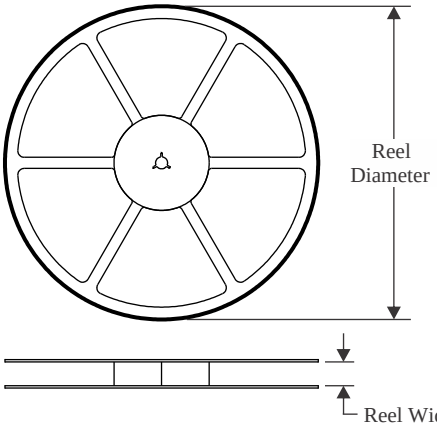

TAPE DIMENSIONS

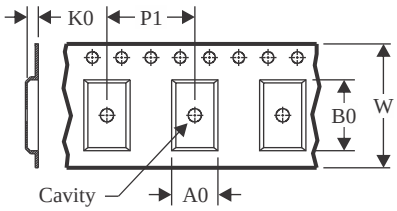

A0	Dimension designed to accommodate the component width
B0	Dimension designed to accommodate the component length
K0	Dimension designed to accommodate the component thickness
W	Overall width of the carrier tape
P1	Pitch between successive cavity centers

QUADRANT ASSIGNMENTS FOR PIN 1 ORIENTATION IN TAPE

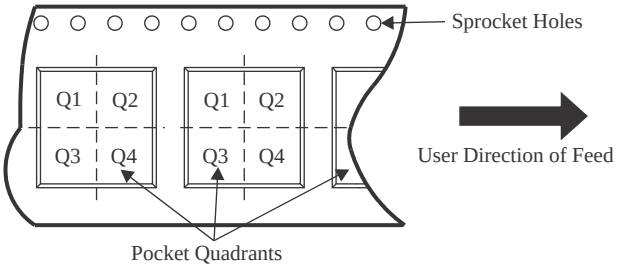

*All dimensions are nominal

Device	Package Type	Package Drawing	Pins	SPQ	Reel Diameter (mm)	Reel Width W1 (mm)	A0 (mm)	B0 (mm)	K0 (mm)	P1 (mm)	W (mm)	Pin1 Quadrant
CD74AC273M96	SOIC	DW	20	2000	330.0	24.4	10.9	13.3	2.7	12.0	24.0	Q1
CD74AC273M96	SOIC	DW	20	2000	330.0	24.4	10.8	13.3	2.7	12.0	24.0	Q1
CD74ACT273M96	SOIC	DW	20	2000	330.0	24.4	10.9	13.3	2.7	12.0	24.0	Q1
CD74ACT273M96	SOIC	DW	20	2000	330.0	24.4	10.8	13.3	2.7	12.0	24.0	Q1
CD74ACT273PWR	TSSOP	PW	20	2000	330.0	16.4	6.95	7.0	1.4	8.0	16.0	Q1
CD74ACT273PWR	TSSOP	PW	20	2000	330.0	16.4	6.95	7.0	1.4	8.0	16.0	Q1
CD74ACT273SM96	SSOP	DB	20	2000	330.0	16.4	8.2	7.5	2.5	12.0	16.0	Q1
CD74ACT273SM96	SSOP	DB	20	2000	330.0	16.4	8.2	7.5	2.5	12.0	16.0	Q1

TAPE AND REEL BOX DIMENSIONS

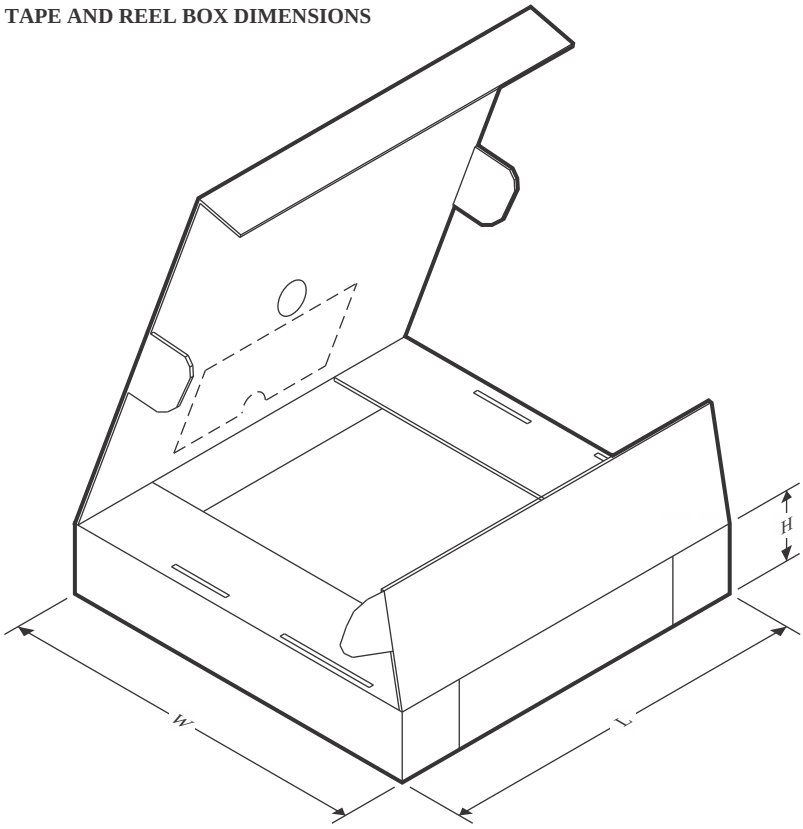

*All dimensions are nominal

Device	Package Type	Package Drawing	Pins	SPQ	Length (mm)	Width (mm)	Height (mm)
CD74AC273M96	SOIC	DW	20	2000	356.0	356.0	45.0
CD74AC273M96	SOIC	DW	20	2000	367.0	367.0	45.0
CD74ACT273M96	SOIC	DW	20	2000	356.0	356.0	45.0
CD74ACT273M96	SOIC	DW	20	2000	367.0	367.0	45.0
CD74ACT273PWR	TSSOP	PW	20	2000	356.0	356.0	35.0
CD74ACT273PWR	TSSOP	PW	20	2000	353.0	353.0	32.0
CD74ACT273SM96	SSOP	DB	20	2000	353.0	353.0	32.0
CD74ACT273SM96	SSOP	DB	20	2000	356.0	356.0	35.0

TUBE

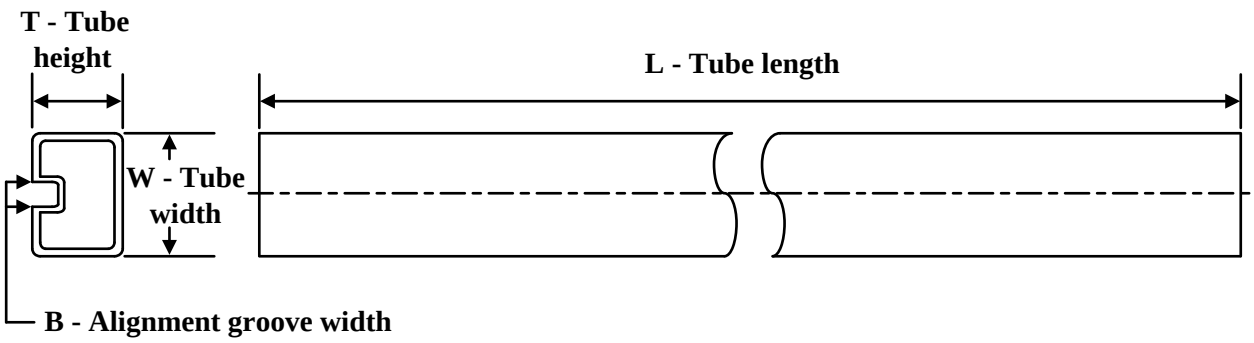

*All dimensions are nominal

Device	Package Name	Package Type	Pins	SPQ	L (mm)	W (mm)	T (µm)	B (mm)
CD74AC273E	N	PDIP	20	20	506	13.97	11230	4.32
CD74AC273E.A	N	PDIP	20	20	506	13.97	11230	4.32
CD74ACT273E	N	PDIP	20	20	506	13.97	11230	4.32
CD74ACT273E.A	N	PDIP	20	20	506	13.97	11230	4.32
CD74ACT273EE4	N	PDIP	20	20	506	13.97	11230	4.32

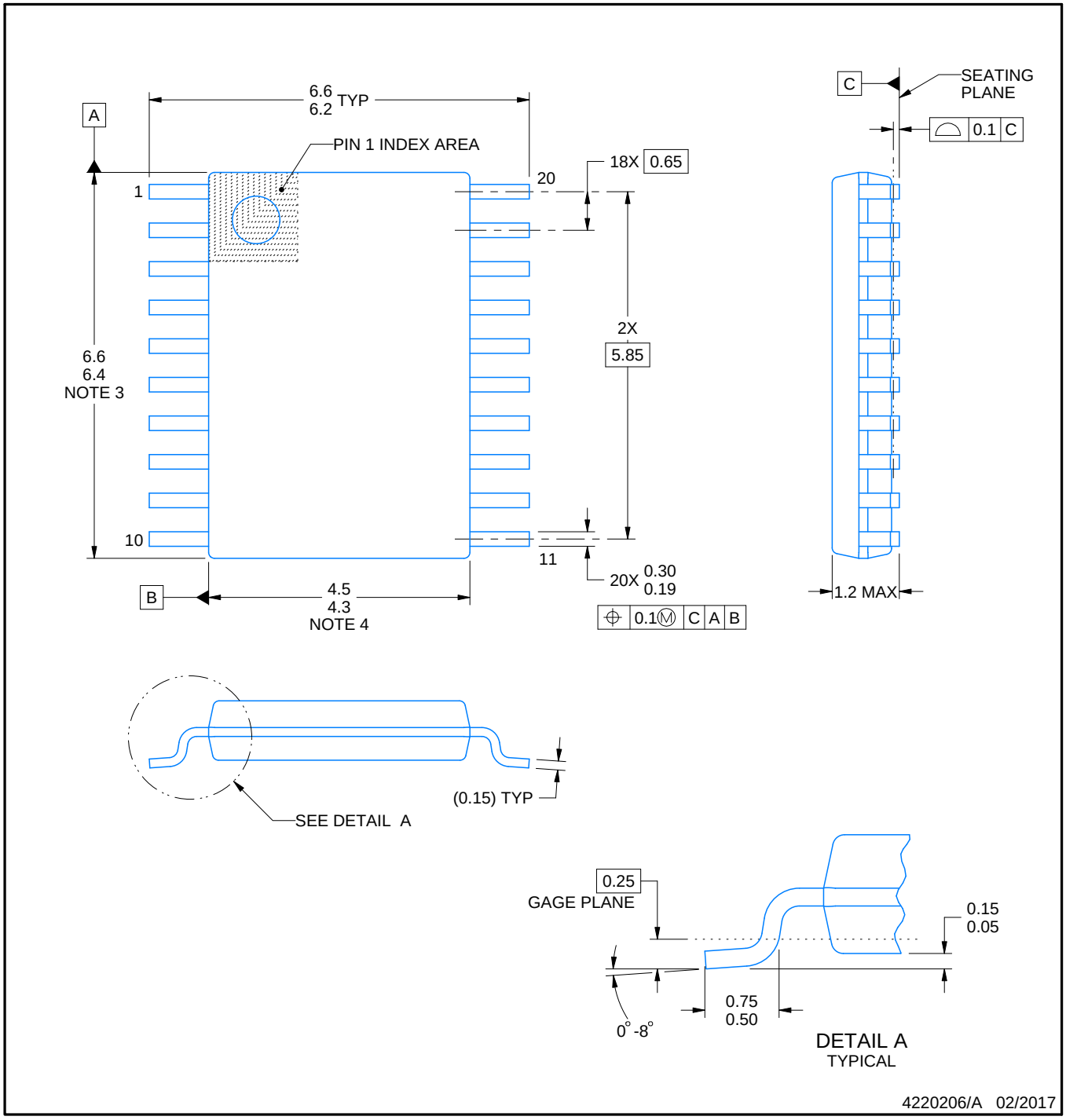

NOTES:

1. All linear dimensions are in millimeters. Any dimensions in parenthesis are for reference only. Dimensioning and tolerancing per ASME Y14.5M.
2. This drawing is subject to change without notice.
3. This dimension does not include mold flash, protrusions, or gate burrs. Mold flash, protrusions, or gate burrs shall not exceed 0.15 mm per side.
4. This dimension does not include interlead flash. Interlead flash shall not exceed 0.25 mm per side.
5. Reference JEDEC registration MO-153.

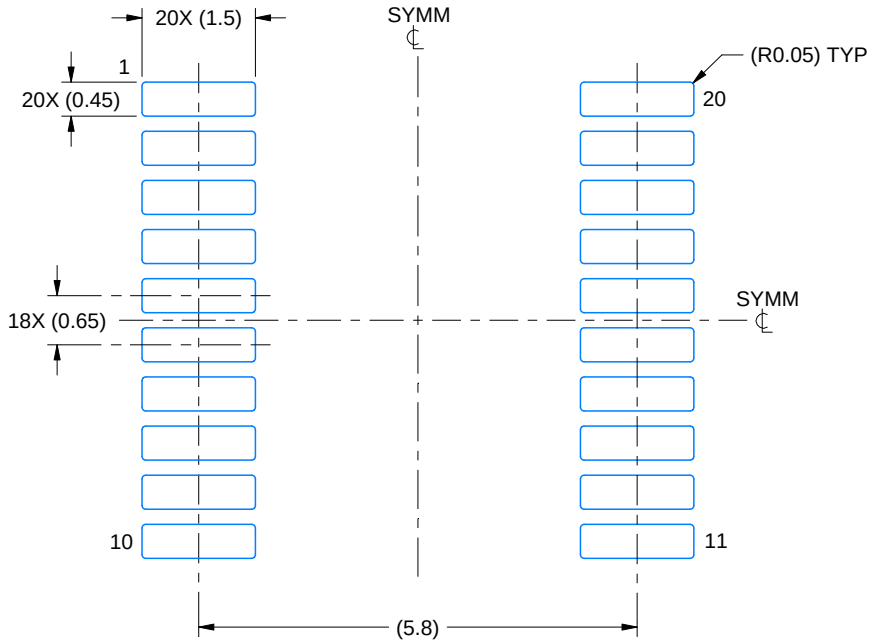

LAND PATTERN EXAMPLE
EXPOSED METAL SHOWN
SCALE: 10X

NON-SOLDER MASK DEFINED (PREFERRED)

SOLDER MASK DEFINED

SOLDER MASK DETAILS

4220206/A 02/2017

NOTES: (continued)

6. Publication IPC-7351 may have alternate designs.
7. Solder mask tolerances between and around signal pads can vary based on board fabrication site.

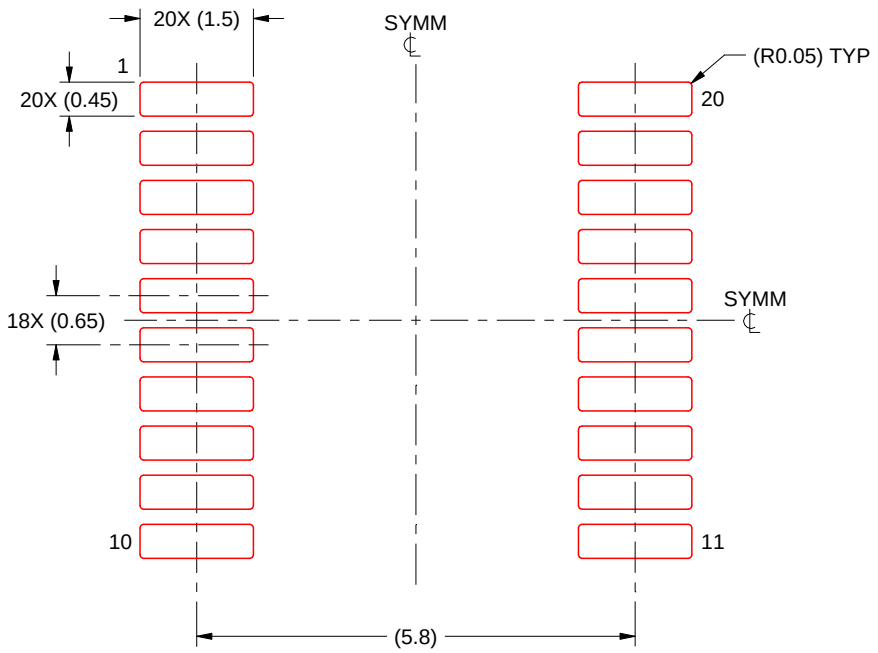

SOLDER PASTE EXAMPLE
BASED ON 0.125 mm THICK STENCIL
SCALE: 10X

4220206/A 02/2017

NOTES: (continued)

8. Laser cutting apertures with trapezoidal walls and rounded corners may offer better paste release. IPC-7525 may have alternate design recommendations.
9. Board assembly site may have different recommendations for stencil design.

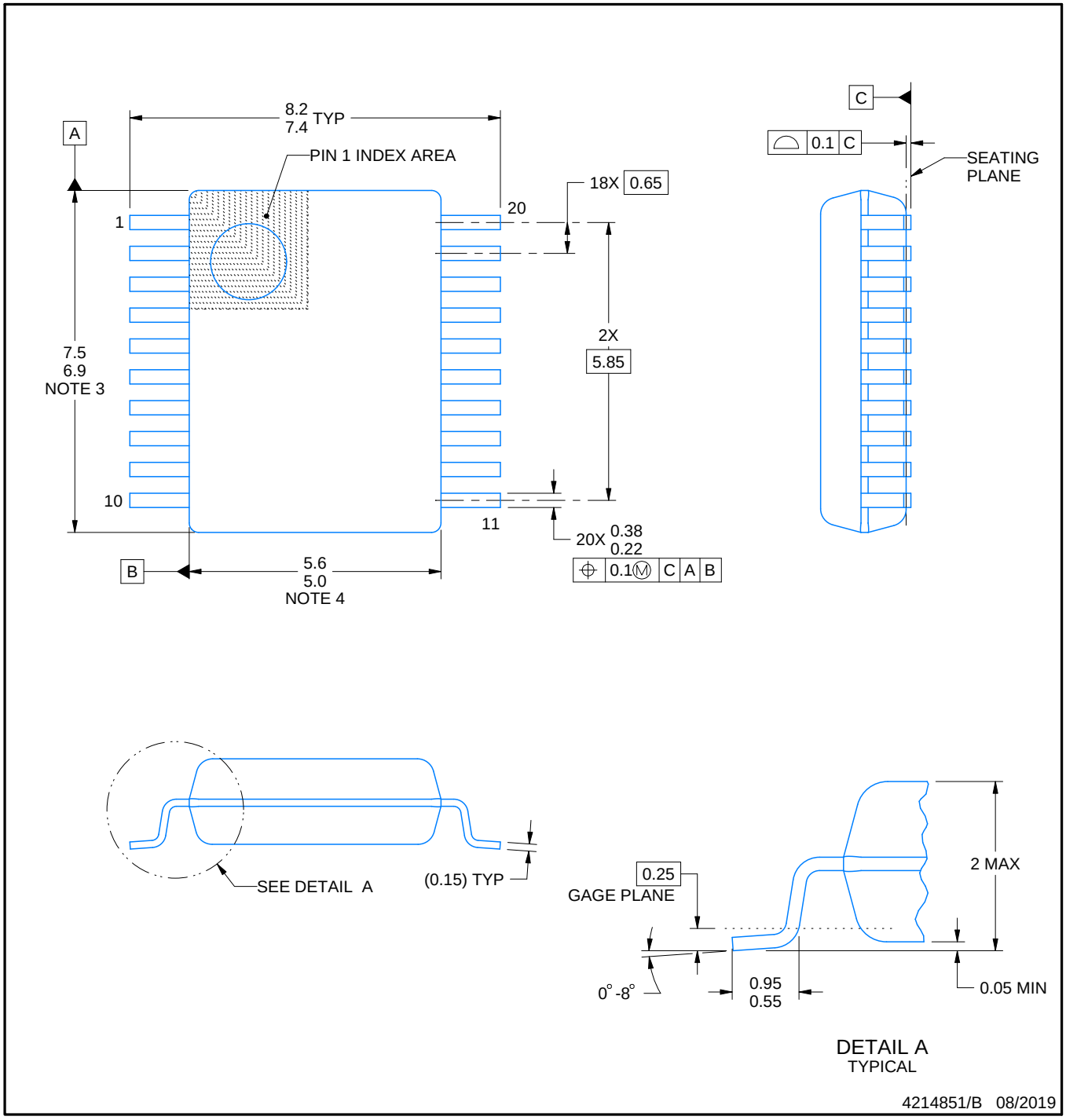

NOTES:

1. All linear dimensions are in millimeters. Any dimensions in parenthesis are for reference only. Dimensioning and tolerancing per ASME Y14.5M.
2. This drawing is subject to change without notice.
3. This dimension does not include mold flash, protrusions, or gate burrs. Mold flash, protrusions, or gate burrs shall not exceed 0.15 mm per side.
4. This dimension does not include interlead flash. Interlead flash shall not exceed 0.25 mm per side.
5. Reference JEDEC registration MO-150.

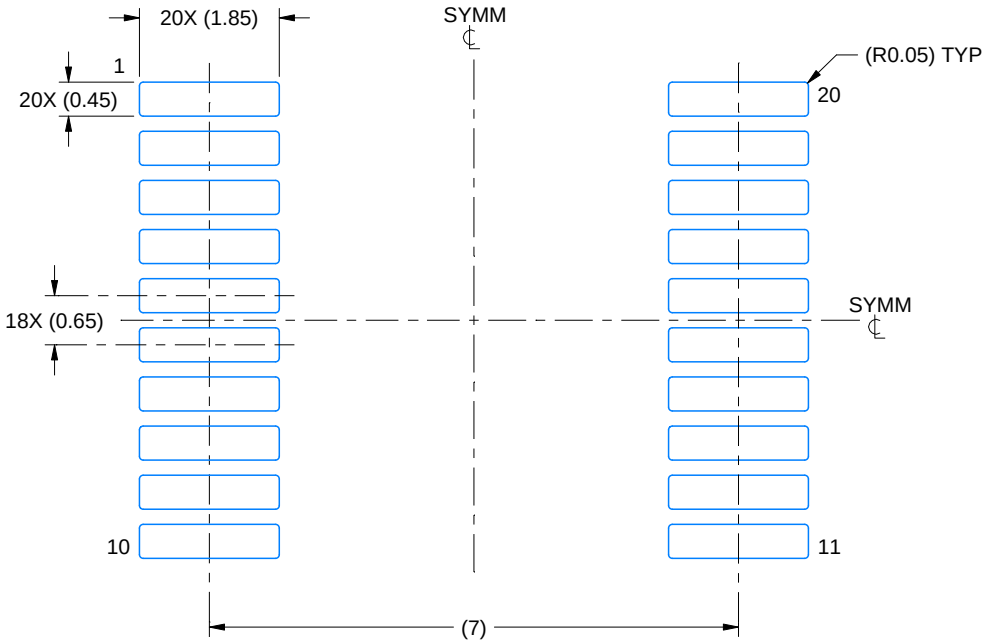

LAND PATTERN EXAMPLE
EXPOSED METAL SHOWN
SCALE: 10X

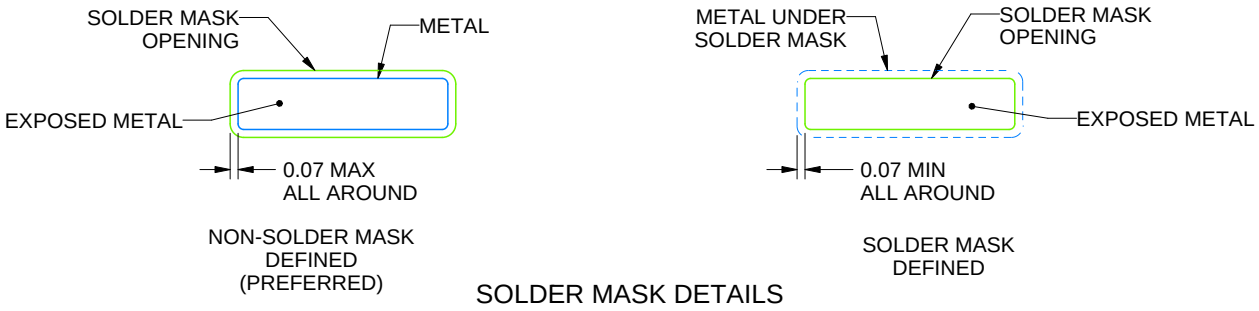

SOLDER MASK DETAILS

4214851/B 08/2019

NOTES: (continued)

6. Publication IPC-7351 may have alternate designs.
7. Solder mask tolerances between and around signal pads can vary based on board fabrication site.

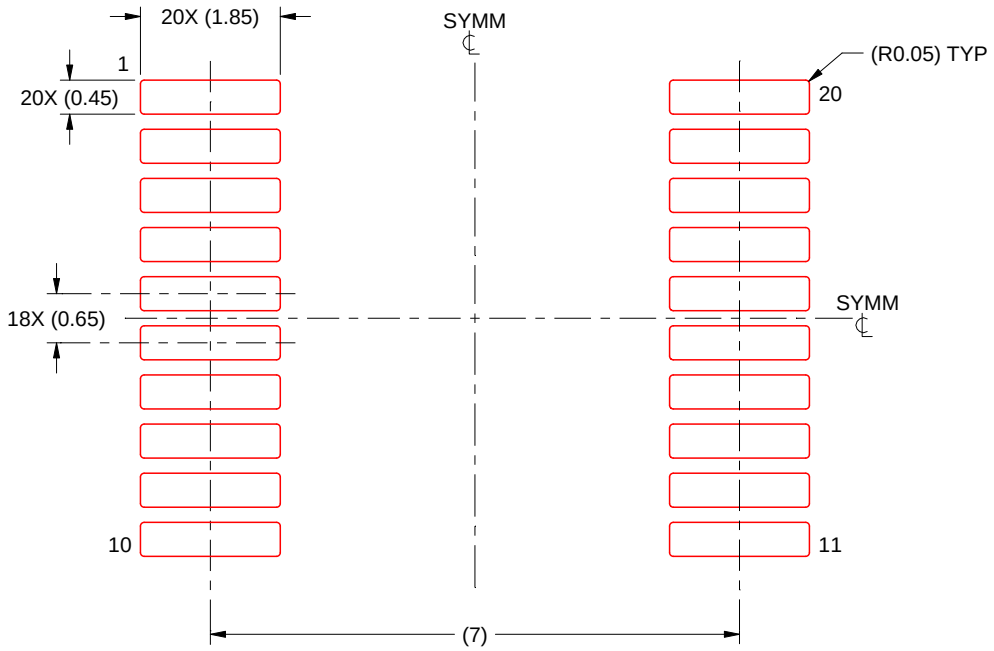

SOLDER PASTE EXAMPLE
BASED ON 0.125 mm THICK STENCIL
SCALE: 10X

4214851/B 08/2019

NOTES: (continued)

8. Laser cutting apertures with trapezoidal walls and rounded corners may offer better paste release. IPC-7525 may have alternate design recommendations.
9. Board assembly site may have different recommendations for stencil design.

J (R–GDIP–T**) CERAMIC DUAL IN–LINE PACKAGE

14 LEADS SHOWN

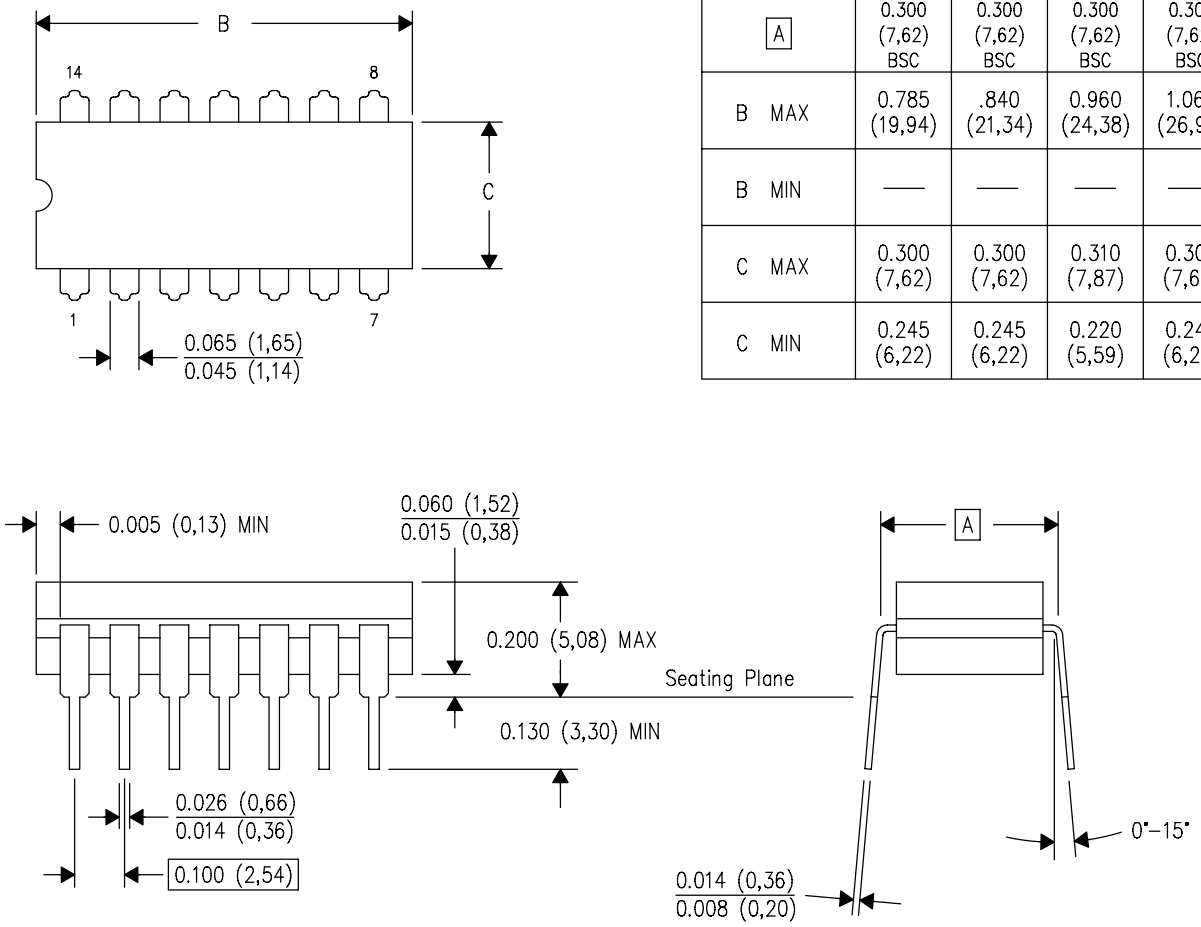

DIM \ PINS **	14	16	18	20
A	0.300 (7,62) BSC	0.300 (7,62) BSC	0.300 (7,62) BSC	0.300 (7,62) BSC
B MAX	0.785 (19,94)	.840 (21,34)	0.960 (24,38)	1.060 (26,92)
B MIN	—	—	—	—
C MAX	0.300 (7,62)	0.300 (7,62)	0.310 (7,87)	0.300 (7,62)
C MIN	0.245 (6,22)	0.245 (6,22)	0.220 (5,59)	0.245 (6,22)

4040083/F 03/03

NOTES:
- A. All linear dimensions are in inches (millimeters).
- B. This drawing is subject to change without notice.
- C. This package is hermetically sealed with a ceramic lid using glass frit.
- D. Index point is provided on cap for terminal identification only on press ceramic glass frit seal only.
- E. Falls within MIL STD 1835 GDIP1–T14, GDIP1–T16, GDIP1–T18 and GDIP1–T20.

N (R–PDIP–T**) PLASTIC DUAL–IN–LINE PACKAGE

16 PINS SHOWN

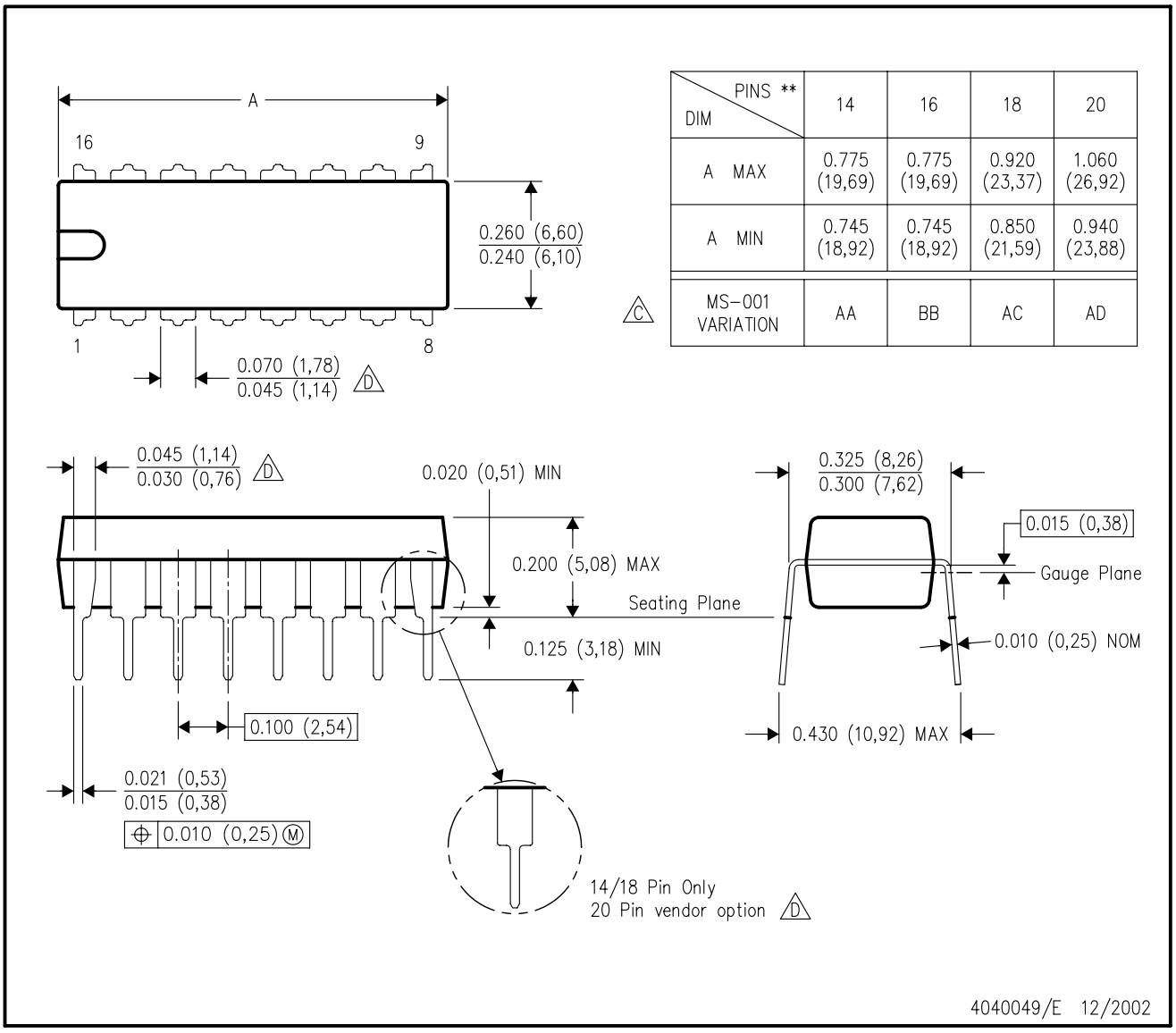

DIM \ PINS **	14	16	18	20
A MAX	0.775 (19,69)	0.775 (19,69)	0.920 (23,37)	1.060 (26,92)
A MIN	0.745 (18,92)	0.745 (18,92)	0.850 (21,59)	0.940 (23,88)
MS–001 VARIATION (C)	AA	BB	AC	AD

NOTES:
A. All linear dimensions are in inches (millimeters).
B. This drawing is subject to change without notice.
C. Falls within JEDEC MS–001, except 18 and 20 pin minimum body length (Dim A).
D. The 20 pin end lead shoulder width is a vendor option, either half or full width.

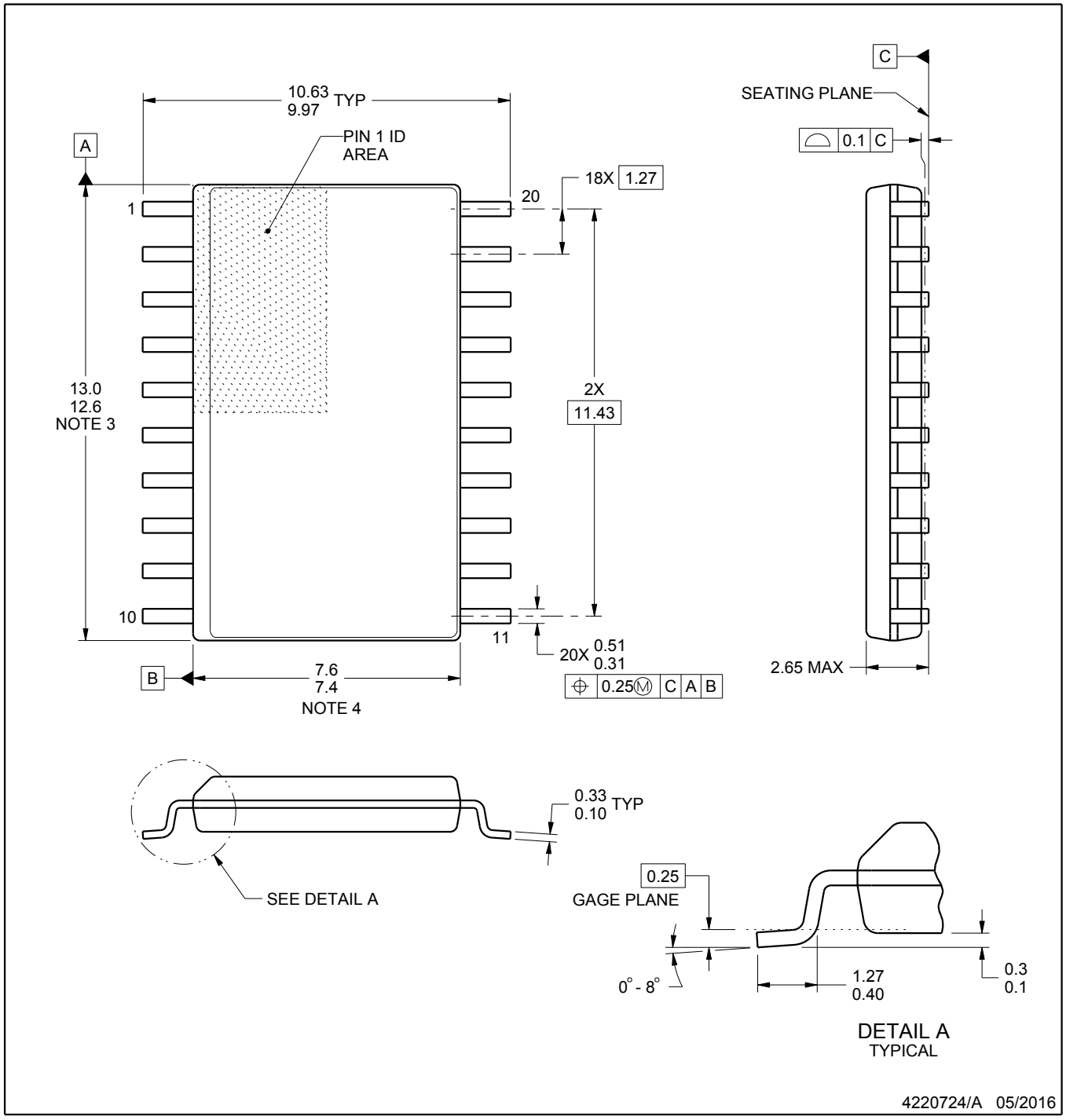

NOTES:

1. All linear dimensions are in millimeters. Dimensions in parenthesis are for reference only. Dimensioning and tolerancing per ASME Y14.5M.
2. This drawing is subject to change without notice.
3. This dimension does not include mold flash, protrusions, or gate burrs. Mold flash, protrusions, or gate burrs shall not exceed 0.15 mm per side.
4. This dimension does not include interlead flash. Interlead flash shall not exceed 0.43 mm per side.
5. Reference JEDEC registration MS-013.

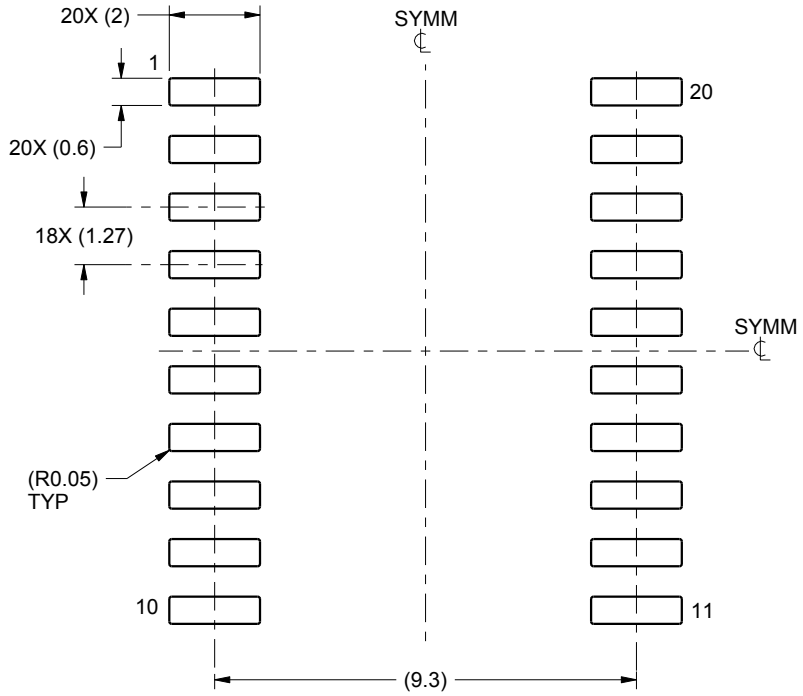

LAND PATTERN EXAMPLE
SCALE:6X

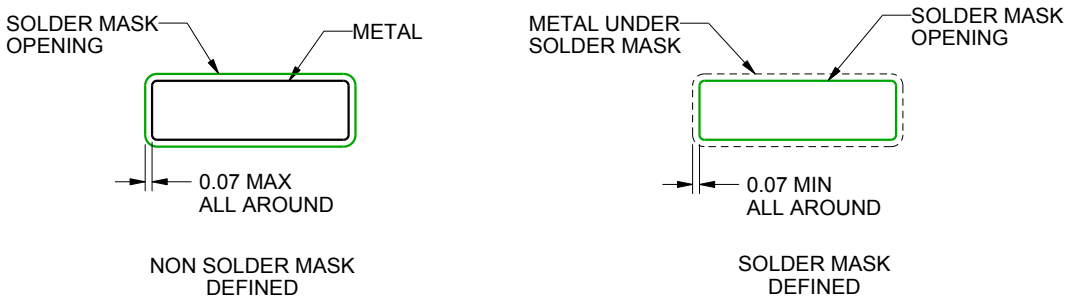

SOLDER MASK DETAILS

4220724/A 05/2016

NOTES: (continued)

6. Publication IPC-7351 may have alternate designs.
7. Solder mask tolerances between and around signal pads can vary based on board fabrication site.

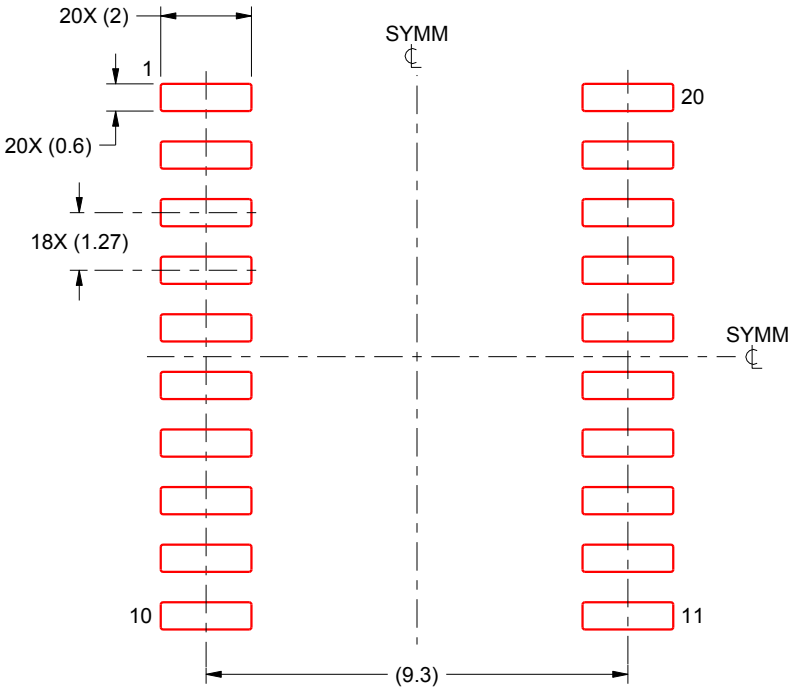

SOLDER PASTE EXAMPLE
BASED ON 0.125 mm THICK STENCIL
SCALE:6X

4220724/A 05/2016

NOTES: (continued)

8. Laser cutting apertures with trapezoidal walls and rounded corners may offer better paste release. IPC-7525 may have alternate design recommendations.
9. Board assembly site may have different recommendations for stencil design.

IMPORTANT NOTICE AND DISCLAIMER

TI PROVIDES TECHNICAL AND RELIABILITY DATA (INCLUDING DATA SHEETS), DESIGN RESOURCES (INCLUDING REFERENCE DESIGNS), APPLICATION OR OTHER DESIGN ADVICE, WEB TOOLS, SAFETY INFORMATION, AND OTHER RESOURCES “AS IS” AND WITH ALL FAULTS, AND DISCLAIMS ALL WARRANTIES, EXPRESS AND IMPLIED, INCLUDING WITHOUT LIMITATION ANY IMPLIED WARRANTIES OF MERCHANTABILITY, FITNESS FOR A PARTICULAR PURPOSE OR NON-INFRINGEMENT OF THIRD PARTY INTELLECTUAL PROPERTY RIGHTS.

These resources are intended for skilled developers designing with TI products. You are solely responsible for (1) selecting the appropriate TI products for your application, (2) designing, validating and testing your application, and (3) ensuring your application meets applicable standards, and any other safety, security, regulatory or other requirements.

These resources are subject to change without notice. TI grants you permission to use these resources only for development of an application that uses the TI products described in the resource. Other reproduction and display of these resources is prohibited. No license is granted to any other TI intellectual property right or to any third party intellectual property right. TI disclaims responsibility for, and you will fully indemnify TI and its representatives against, any claims, damages, costs, losses, and liabilities arising out of your use of these resources.

TI’s products are provided subject to TI’s Terms of Sale or other applicable terms available either on ti.com or provided in conjunction with such TI products. TI’s provision of these resources does not expand or otherwise alter TI’s applicable warranties or warranty disclaimers for TI products.

TI objects to and rejects any additional or different terms you may have proposed.

Mailing Address: Texas Instruments, Post Office Box 655303, Dallas, Texas 75265
Copyright © 2025, Texas Instruments Incorporated