OPAx392 Precision, Low-Offset-Voltage, Low-Noise, Low-Input-Bias-Current, Rail-to-Rail I/O, e-trim™ Operational Amplifiers

1 Features

- Low offset voltage: ±10µV (maximum)
- Low-drift: ±0.18µV/°C
- Low input bias current: 10fA
- Low noise: 4.4nV/√Hz at 10kHz
- Low 1/f noise: 2µV_{PP} (0.1Hz to 10Hz)
- Low supply voltage operation: 1.7V to 5.5V
- Low quiescent current: 1.22mA
- Fast settling: 0.75µs (1V to 0.1%)
- Fast slew rate: 4.5V/µs
- High output current: +65mA/–55mA short circuit
- Gain bandwidth: 13MHz
- Rail-to-rail input and output
- Specified temperature range: –40°C to +125°C
- EMI and RFI filtered inputs

2 Applications

- Multiparameter patient monitor
- Electrocardiogram (ECG)
- Chemistry and gas analyzer
- Optical module
- Analog input module
- Process analytics (pH, gas, concentration, force and humidity)
- Gas detector
- Analog security camera
- Merchant DC/DC
- Pulse oximeter
- Inter-DC interconnect (long-haul, submarine)
- Data acquisition (DAQ)

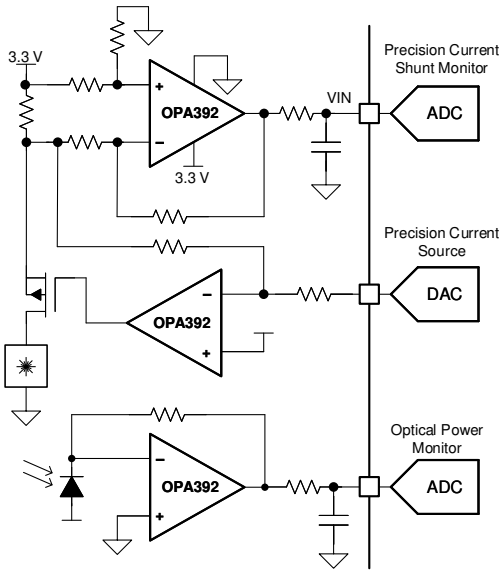

OPAx392 Applications in Optical Modules

3 Description

The OPAx392 family of operational amplifiers (OPA392, OPA2392, and OPA4392) features ultra-low offset, offset drift, and input bias current with rail-to-rail input and output operation. In addition to precision dc accuracy, the ac performance is optimized for low noise and fast-settling transient response. These features make the OPAx392 an excellent choice for driving high-precision analog-to-digital converters (ADCs) or buffering the output of high-resolution, digital-to-analog converters (DACs).

The OPAx392 feature TI's e-trim™ operational amplifier technology to achieve ultra-low offset voltage and offset voltage drift without any input chopping or auto-zero techniques. This technique enables ultra-low input bias current for sensor inputs or photodiode current-to-voltage measurements, creating high-performance transimpedance stages for optical modules or medical instrumentation.

Device Information

PART NUMBER(1)	CHANNELS	PACKAGE(2)
OPA392	Single	DBV (SOT-23, 5)
	Single	DCK (SC70, 5)
	Single	YBJ (DSBGA, 6)
OPA2392	Dual	D (SOIC, 8)
	Dual	DGK (VSSOP, 8)
	Dual	DSG (WSON, 8)
	Dual	YBJ (DSBGA, 9)
OPA4392	Quad	PW (TSSOP, 14)
	Quad	RTE (WQFN, 16)(3)

(1) See Section 4.
(2) For more information, see Section 11.
(3) Preview information (not Production Data).

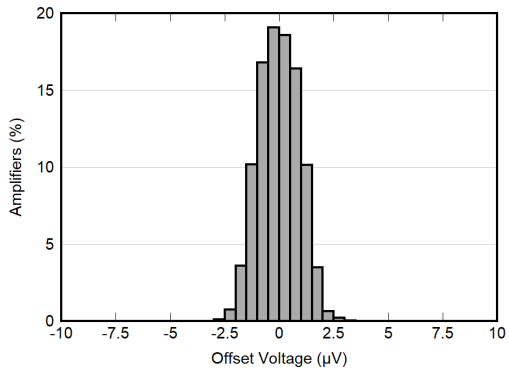

OPAx392 Input Offset Voltage Distribution

An IMPORTANT NOTICE at the end of this data sheet addresses availability, warranty, changes, use in safety-critical applications, intellectual property matters and other important disclaimers. UNLESS OTHERWISE NOTED, this document contains PRODUCTION DATA.

Table of Contents

1 Features....1
2 Applications....1
3 Description....1
4 Device Comparison Table....2
5 Pin Configuration and Functions....3
6 Specifications....6
6.1 Absolute Maximum Ratings....6
6.2 ESD Ratings....6
6.3 Recommended Operating Conditions....6
6.4 Thermal Information OPA392....7
6.5 Thermal Information OPA2392....7
6.6 Thermal Information OPA4392....7
6.7 Electrical Characteristics....8
6.8 Typical Characteristics....11
7 Detailed Description....18
7.1 Overview....18
7.2 Functional Block Diagram....18
7.3 Feature Description....19
7.4 Device Functional Modes....19
8 Application and Implementation....20
8.1 Application Information....20
8.2 Typical Application....20
8.3 Power Supply Recommendations....23
8.4 Layout....23
9 Device and Documentation Support....24
9.1 Device Support....24
9.2 Documentation Support....24
9.3 Receiving Notification of Documentation Updates....24
9.4 Support Resources....24
9.5 Trademarks....24
9.6 Electrostatic Discharge Caution....25
9.7 Glossary....25
10 Revision History....25
11 Mechanical, Packaging, and Orderable Information....25

4 Device Comparison Table

DEVICE	CHANNELS	SHUTDOWN	PACKAGE
OPA392	Single	No	DBV (SOT-23, 5)
		No	DCK (SC70, 5)
		Yes	YBJ (DSBGA, 6)
OPA2392	Dual	No	D (SOIC, 8)
		No	DGK (VSSOP, 8)
		No	DSG (WSON, 8)
		Yes	YBJ (DSBGA, 9)
OPA4392	Quad	No	PW (TSSOP, 14)
		Yes	RTE (WQFN, 16)(1)

(1) Preview information (not Production Data).

Copyright © 2025 Texas Instruments Incorporated

5 Pin Configuration and Functions

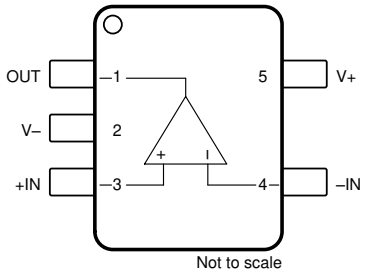

Figure 5-1. OPA392 DBV Package, 5-Pin SOT-23 (Top View)

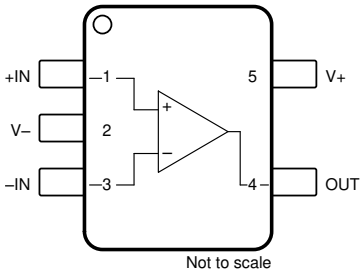

Figure 5-2. OPA392 DCK Package, 5-Pin SC70 (Top View)

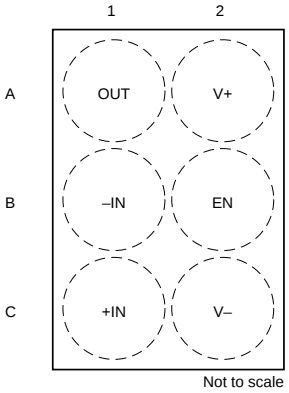

Figure 5-3. OPA392 YBJ Package, 6-Pin DSBGA (Top View)

Table 5-1. Pin Functions: OPA392

PIN				TYPE	DESCRIPTION
NAME	NO.				
	DBV (SOT-23)	DCK (SC70)	YBJ (DSBGA)		
EN	—	—	B2	Input	Enable pin. High = amplifier enabled.
–IN	4	3	B1	Input	Inverting input
+IN	3	1	C1	Input	Noninverting input
OUT	1	4	A1	Output	Output
V–	2	2	C2	Power	Negative (lowest) power supply
V+	5	5	A2	Power	Positive (highest) power supply

Copyright © 2025 Texas Instruments Incorporated

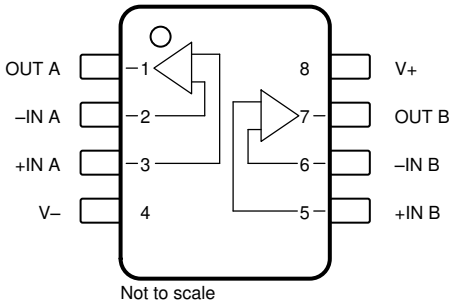

Figure 5-4. OPA2392 D Package, 8-Pin SOIC and DGK Package, 8-Pin VSSOP (Top View)

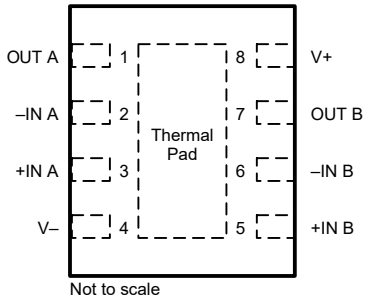

Figure 5-5. OPA2392 DSG Package, 8-Pin WSON With Exposed Thermal Pad (Top View)

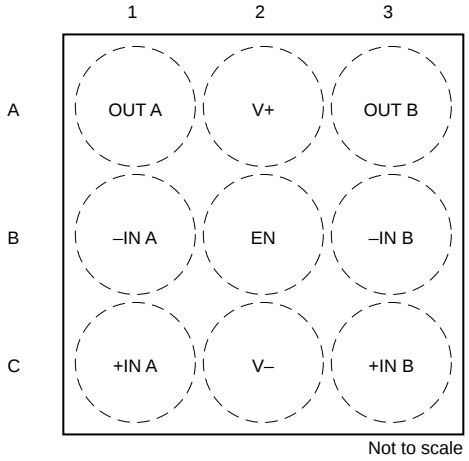

Figure 5-6. OPA2392 YBJ Package, 9-Pin DSBGA (Top View)

Table 5-2. Pin Functions: OPA2392

PIN				TYPE	DESCRIPTION
NAME	NO.				
	D (SOIC), DGK (VSSOP)	DSG (WSON)	YBJ (DSBGA)		
EN	—	—	B2	Input	Enable pin. High = both amplifiers enabled.
–IN A	2	2	B1	Input	Inverting input, channel A
+IN A	3	3	C1	Input	Noninverting input, channel A
–IN B	6	6	B3	Input	Inverting input, channel B
+IN B	5	5	C3	Input	Noninverting input, channel B
OUT A	1	1	A1	Output	Output, channel A
OUT B	7	7	A3	Output	Output, channel B
V–	4	4	C2	Power	Negative (lowest) power supply
V+	8	8	A2	Power	Positive (highest) power supply
Thermal Pad	—	Thermal pad	—	—	Connect thermal pad to V–

Copyright © 2025 Texas Instruments Incorporated

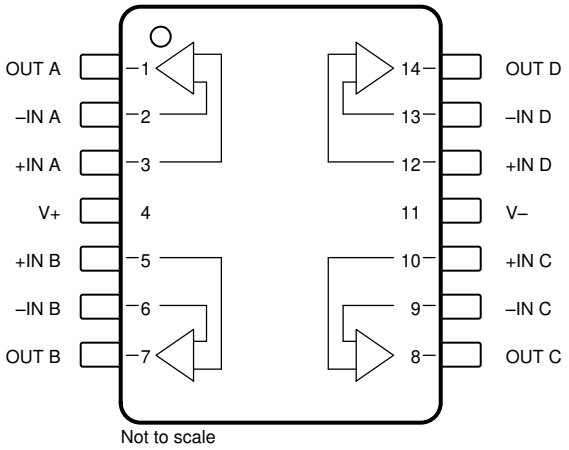

Figure 5-7. OPA4392 PW Package, 14-Pin TSSOP (Top View)

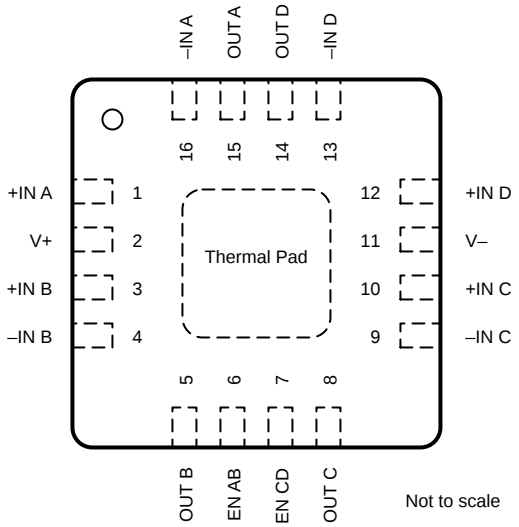

Figure 5-8. OPA4392 RTE Preview Package, 16-Pin WQFN (Top View)

Table 5-3. Pin Functions: OPA4392

PIN			TYPE	DESCRIPTION
NAME	NO.			
	PW (TSSOP)	RTE (WQFN)		
EN AB	—	6	Input	Enable pin for A and B amplifiers. High = amplifiers A and B are enabled.
EN CD	—	7	Input	Enable pin for C and D amplifiers. High = amplifiers C and D are enabled.
–IN A	2	16	Input	Inverting input, channel A
+IN A	3	1	Input	Noninverting input, channel A
–IN B	6	4	Input	Inverting input, channel B
+IN B	5	3	Input	Noninverting input, channel B
–IN C	9	9	Input	Inverting input, channel C
+IN C	10	10	Input	Noninverting input, channel C
–IN D	13	13	Input	Inverting input, channel D
+IN D	12	12	Input	Noninverting input, channel D
OUT A	1	15	Output	Output, channel A
OUT B	7	5	Output	Output, channel B
OUT C	8	8	Output	Output, channel C
OUT D	14	14	Output	Output, channel D
Thermal Pad	—	Thermal Pad	Power	Connect thermal pad to V–
V–	11	11	Power	Negative (lowest) power supply
V+	4	2	Power	Positive (highest) power supply

6 Specifications

6.1 Absolute Maximum Ratings

over operating free-air temperature range (unless otherwise noted)[1]

			MIN	MAX	UNIT
V_S	Supply voltage, V_S = (V+) – (V–)	Single-supply		6	V
		Dual-supply		±3	
	Input voltage, all pins	Common-mode	(V–) – 0.5	(V+) + 0.5	V
		Differential		(V+) – (V–) + 0.2	
	Input current, all pins			±10	mA
	Output short circuit[2]		Continuous	Continuous	
T_A	Operating temperature		–55	150	°C
T_J	Junction temperature		–55	150	°C
T_{stg}	Storage temperature		–65	150	°C

(1) Operation outside the Absolute Maximum Ratings may cause permanent device damage. Absolute Maximum Ratings do not imply functional operation of the device at these or any other conditions beyond those listed under Recommended Operating Conditions. If used outside the Recommended Operating Conditions but within the Absolute Maximum Ratings, the device may not be fully functional, and this may affect device reliability, functionality, performance, and shorten the device lifetime.
(2) Short-circuit to ground, one amplifier per package.

6.2 ESD Ratings

			VALUE	UNIT
$V_{(ESD)}$	Electrostatic discharge	Human-body model (HBM), per ANSI/ESDA/JEDEC JS-001[1]	±2000	V
		Charged device model (CDM) per ANSI/ESDA/JEDEC JS-002[2]	±500	

(1) JEDEC document JEP155 states that 500-V HBM allows safe manufacturing with a standard ESD control process.
(2) JEDEC document JEP157 states that 250-V CDM allows safe manufacturing with a standard ESD control process.

6.3 Recommended Operating Conditions

over operating free-air temperature range (unless otherwise noted)

			MIN	NOM	MAX	UNIT
V_S	Supply voltage	Single-supply	1.7		5.5	V
		Dual-supply	±0.85		±2.75	
T_A	Specified temperature		–40		125	°C

Copyright © 2025 Texas Instruments Incorporated

6.4 Thermal Information OPA392

THERMAL METRIC[1]		OPA392			UNIT
		DBV (SOT-23)	DCK (SC70)	YBJ (DSBGA)	
		5 PINS	5 PINS	6 PINS	
$R_{\theta JA}$	Junction-to-ambient thermal resistance	187.1	220.8	135.0	°C/W
$R_{\theta JC(top)}$	Junction-to-case (top) thermal resistance	107.4	124.4	1.1	°C/W
$R_{\theta JB}$	Junction-to-board thermal resistance	57.5	72.9	38.8	°C/W
Ψ_{JT}	Junction-to-top characterization parameter	33.5	46.1	0.4	°C/W
Ψ_{JB}	Junction-to-board characterization parameter	57.1	72.6	38.8	°C/W
$R_{\theta JC(bot)}$	Junction-to-case (bottom) thermal resistance	N/A	N/A	N/A	°C/W

(1) For more information about traditional and new thermal metrics, see the *Semiconductor and IC Package Thermal Metrics* application report.

6.5 Thermal Information OPA2392

THERMAL METRIC[1]		OPA2392				UNIT
		D (SOIC)	DGK (VSSOP)	DSG (WSON)	YBJ (DSBGA)	
		8 PINS	8 PINS	8 PINS	9 PINS	
$R_{\theta JA}$	Junction-to-ambient thermal resistance	131.7	165	70.9	110.7	°C/W
$R_{\theta JC(top)}$	Junction-to-case (top) thermal resistance	71.4	53	88.3	0.7	°C/W
$R_{\theta JB}$	Junction-to-board thermal resistance	75.2	87	37.5	32.1	°C/W
Ψ_{JT}	Junction-to-top characterization parameter	21.8	4.9	2.9	0.3	°C/W
Ψ_{JB}	Junction-to-board characterization parameter	74.4	85	37.5	32.1	°C/W
$R_{\theta JC(bot)}$	Junction-to-case (bottom) thermal resistance	N/A	N/A	12.8	N/A	°C/W

(1) For more information about traditional and new thermal metrics, see the *Semiconductor and IC Package Thermal Metrics* application report.

6.6 Thermal Information OPA4392

THERMAL METRIC[1]		OPA4392	UNIT
		PW (TSSOP)	
		14 PINS	
$R_{\theta JA}$	Junction-to-ambient thermal resistance	109.6	°C/W
$R_{\theta JC(top)}$	Junction-to-case (top) thermal resistance	27.4	°C/W
$R_{\theta JB}$	Junction-to-board thermal resistance	56.1	°C/W
Ψ_{JT}	Junction-to-top characterization parameter	1.5	°C/W
Ψ_{JB}	Junction-to-board characterization parameter	54.9	°C/W
$R_{\theta JC(bot)}$	Junction-to-case (bottom) thermal resistance	N/A	°C/W

(1) For more information about traditional and new thermal metrics, see the *Semiconductor and IC Package Thermal Metrics* application report.

Copyright © 2025 Texas Instruments Incorporated

6.7 Electrical Characteristics

at T_A = 25°C, V_S = 1.7 V to 5.5 V (single supply) or V_S = ±0.85 V to ±2.75 V (dual supply), R_L = 10 kΩ connected to V_S / 2, V_{CM} = V_S / 2, and V_{OUT} = V_S / 2 (unless otherwise noted)

PARAMETER		TEST CONDITIONS		MIN	TYP	MAX	UNIT
OFFSET VOLTAGE							
V_{OS}	Input offset voltage	V_S = 5.0 V			±1	±10	µV
			OPA2392D, OPA4392		±1	±20	
			OPA392YBJ, OPA2392YBJ		±1	±25	
		V_S = 5.0 V, V_{CM} = (V+) – 200 mV			±2	±30	
			OPA2392YBJ		±2	±85	
		V_S = 5.0 V, T_A = –40°C to +125°C[1]				±100	
		V_{CM} = V–, T_A = –40°C to +125°C[1]	OPA392, OPA2392D, YBJ, OPA4392			±125	
			OPA2392DGK			±180	
dV_{OS}/dT	Input offset voltage drift	V_S = 5.0 V	T_A = 0°C to 85°C		±0.16		µV/°C
			T_A = –40°C to +125°C[1]			±0.6	
			V_{CM} = 5.0 V, T_A = –40°C to +125°C[1]		±0.18	±0.9	
PSRR	Power supply rejection ratio	V_{CM} = V–				±30	µV/V
			T_A = –40°C to +125°C[1]			±80	
INPUT BIAS CURRENT							
I_B	Input bias current[1]				±0.01	±0.8	pA
		T_A = –40°C to +85°C				±5	
		T_A = –40°C to +125°C				±30	
I_{OS}	Input offset current[1]				±0.01	±0.8	pA
		T_A = –40°C to +85°C				±5	
		T_A = –40°C to +125°C				±30	
NOISE							
	Input voltage noise	f = 0.1 Hz to 10 Hz			2.0		$µV_{PP}$
			V_{CM} = (V+) – 0.3		3.2		
e_N	Input voltage noise density	f = 10 Hz			42		nV/√Hz
			V_{CM} = (V+) – 0.3		80		
		f = 1 kHz			6.5		
			V_{CM} = (V+) – 0.3		10.4		
		f = 10 kHz			4.4		
			V_{CM} = (V+) – 0.3		5.8		
i_N	Input current noise density	f = 1 kHz	OPA392DBV		70		fA/√Hz
			OPA392YBJ, OPA2392, OPA4392		25		
INPUT VOLTAGE							
V_{CM}	Common-mode voltage range			V–		V+	V
CMRR	Common-mode rejection ratio	(V–) < V_{CM} < (V+) – 1.5 V		75	120		dB
			T_A = –40°C to +125°C		113		
		(V–) < V_{CM} < (V+), T_A = –40°C to +125°C[1]		66	97		
			V_S = 5.5 V	88	111		
INPUT CAPACITANCE							
Z_{ID}	Differential				10^{13} || 2.8		Ω || pF
Z_{ICM}	Common-mode				10^{13} || 3.5		Ω || pF

Copyright © 2025 Texas Instruments Incorporated

6.7 Electrical Characteristics (continued)

at T_A = 25°C, V_S = 1.7 V to 5.5 V (single supply) or V_S = ±0.85 V to ±2.75 V (dual supply), R_L = 10 kΩ connected to V_S / 2, V_{CM} = V_S / 2, and V_{OUT} = V_S / 2 (unless otherwise noted)

PARAMETER		TEST CONDITIONS		MIN	TYP	MAX	UNIT
OPEN-LOOP GAIN							
A_{OL}	Open-loop voltage gain	V_S = 5.5 V	(V–) + 50 mV < V_{OUT} < (V+) – 50 mV	115	132		dB
			(V–) + 100 mV < V_O < (V+) – 100 mV, R_L = 2 kΩ	110	128		
			(V–) + 100 mV < V_{OUT} < (V+) – 100 mV, R_L = 2 kΩ, T_A = –40°C to +125°C(1)	100			
		V_S = 1.7 V	(V–) + 50 mV < V_{OUT} < (V+) – 50 mV, V_{CM} = (V+) – 1.15 V	106	124		
			(V–) + 100 mV < V_{OUT} < (V+) – 100 mV, R_L = 2 kΩ, V_{CM} = (V+) – 1.15 V	106	124		
			(V–) + 100 mV < V_{OUT} < (V+) – 100 mV, R_L = 2 kΩ, V_{CM} = (V+) – 1.15 V, T_A = –40°C to +125°C(1)	100			
FREQUENCY RESPONSE							
GBW	Gain-bandwidth product	A_V = 1000 V/V			13		MHz
SR	Slew rate	4-V step, gain = +1	falling		4.5		V/µs
			rising		3.5		
	Phase margin	C_L = 100 pF	OPA392DBV, DCK, OPA2392DSG		45		°
			OPA392YBJ, OPA2392D, DGK, YBJ, OPA4392		35		
t_S	Settling time	To 0.1%, 2-V step, gain = +1			0.75		µs
		To 0.01%, 2-V step, gain = +1			1		
	Overload recovery time	V_{IN} × gain > V_S			0.45		µs
THD+N	Total harmonic distortion + noise	V_{OUT} = 1 V_{RMS}, gain = +1, f = 1 kHz, V_{CM} = (V–) + 1.5 V			–112		dB
					0.00025		%
OUTPUT							
	Voltage output swing from both rails	V_S = 1.7 V				20	mV
			R_L = 2 kΩ			30	
		V_S = 5.5 V				20	
			R_L = 2 kΩ			35	
I_{SC}	Short-circuit current	Sinking, V_S = 5.5 V			–55		mA
		Sourcing, V_S = 5.5 V			65		
R_O	Open-loop output impedance	f = 1 MHz			120		Ω
POWER SUPPLY							
I_Q	Quiescent current per amplifier	I_O = 0 mA			1.22	1.4	mA
			T_A = –40°C to +125°C(1)			1.5	

6.7 Electrical Characteristics (continued)

at T_A = 25°C, V_S = 1.7 V to 5.5 V (single supply) or V_S = ±0.85 V to ±2.75 V (dual supply), R_L = 10 kΩ connected to V_S / 2, V_{CM} = V_S / 2, and V_{OUT} = V_S / 2 (unless otherwise noted)

PARAMETER		TEST CONDITIONS	MIN	TYP	MAX	UNIT
SHUTDOWN (OPA392YBJ, OPA2392YBJ and OPA4392RTE only)						
I_{QSD}	Quiescent current per amplifier	All amplifiers disabled, EN = V–		6		µA
V_{IH}	High-level input voltage	Amplifier enabled	(V+) – 0.5			V
V_{IL}	Low-level input voltage	Amplifier disabled			(V–) + 0.5	V
t_{ON}	Amplifier enable time	G = 1, V_{OUT} = 0.9 × V_S/2, two amplifiers enabled		9.5		µs
t_{OFF}	Amplifier disable time	G = 1, V_{OUT} = 0.1 × V_S/2, two amplifiers disabled		7.8		µs
	EN pin input leakage current	V_{IH} = V+		0.02		µA
		V_{IL} = V–		1		

(1) Specification established from device population bench system measurements across multiple lots.

Copyright © 2025 Texas Instruments Incorporated

6.8 Typical Characteristics

at T_A = 25°C, V_S = 5.5 V, V_{CM} = V_S / 2, R_{LOAD} = 10 kΩ connected to V_S / 2, and C_L = 100 pF (unless otherwise noted)

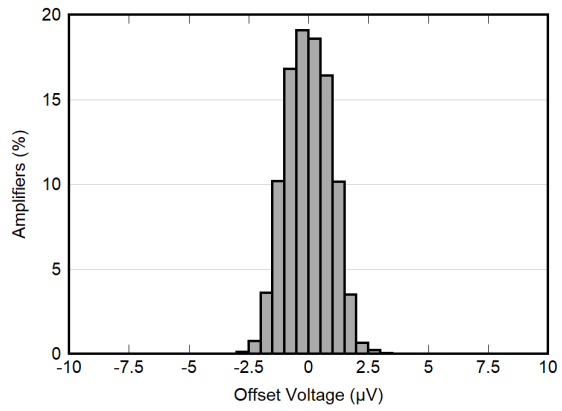

V_S = 5.0 V

Figure 6-1. Offset Voltage Distribution

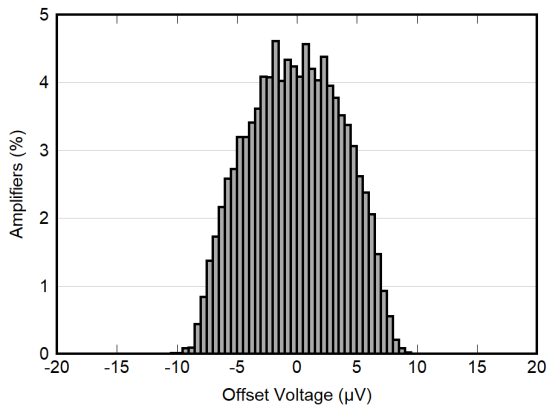

V_S = 5.0 V, V_{CM} = 4.8 V

Figure 6-2. Offset Voltage Distribution

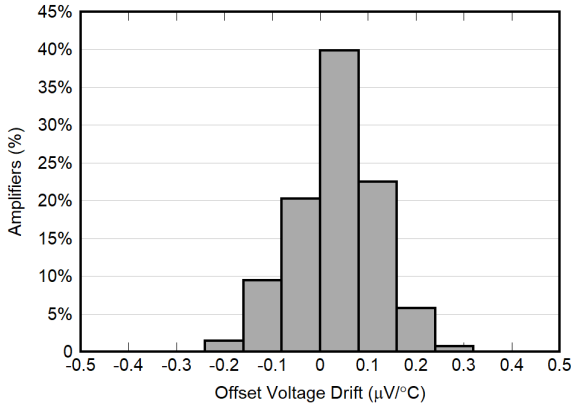

V_S = 5.0 V

Figure 6-3. Offset Voltage Distribution

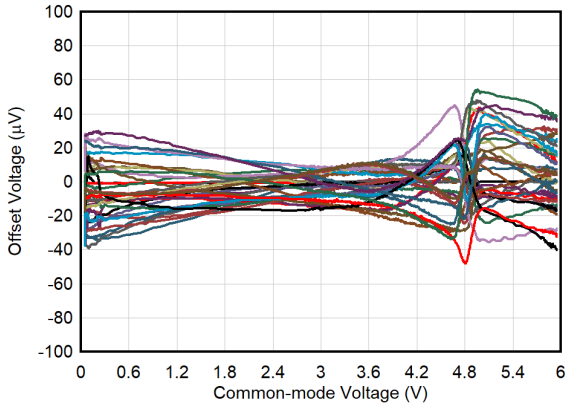

T_A = –40°C

Figure 6-4. Offset Voltage vs Common-Mode Voltage

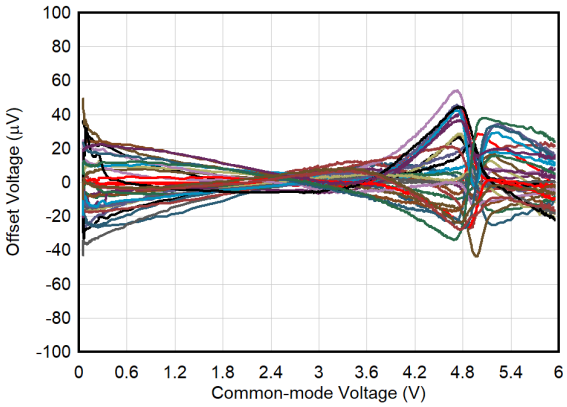

Figure 6-5. Offset Voltage vs Common-Mode Voltage

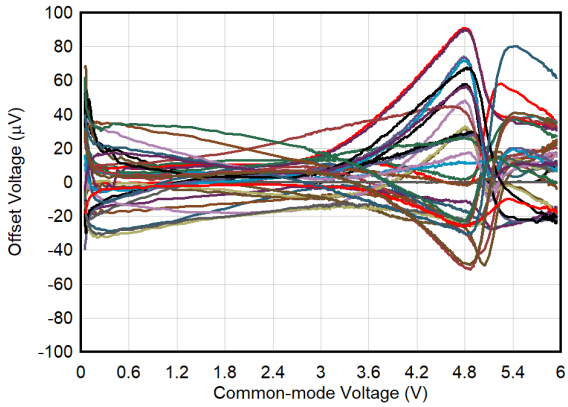

T_A = +125°C

Figure 6-6. Offset Voltage vs Common-Mode Voltage

6.8 Typical Characteristics (continued)

at T_A = 25°C, V_S = 5.5 V, V_{CM} = V_S / 2, R_{LOAD} = 10 kΩ connected to V_S / 2, and C_L = 100 pF (unless otherwise noted)

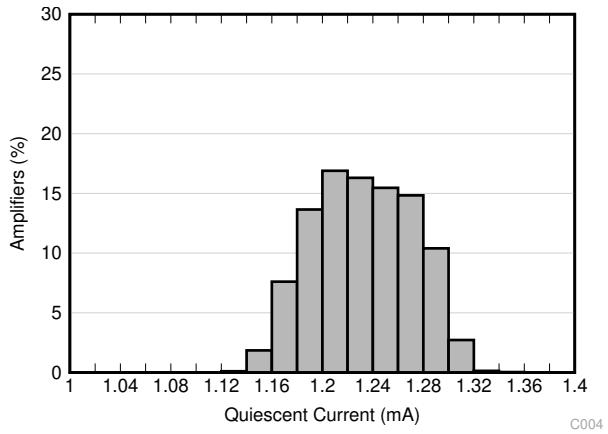

Figure 6-7. Quiescent Current Distribution

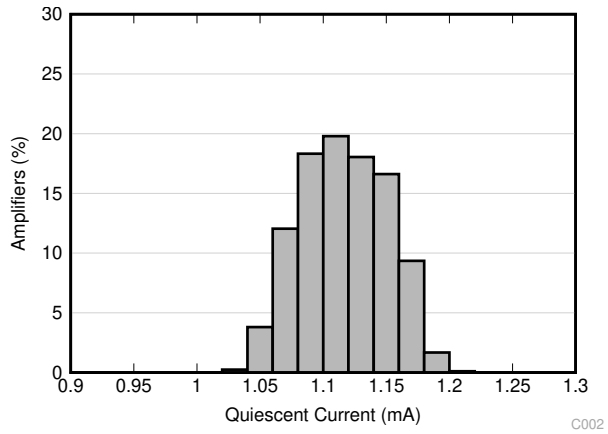

V_S = 1.7 V

Figure 6-8. Quiescent Current Distribution

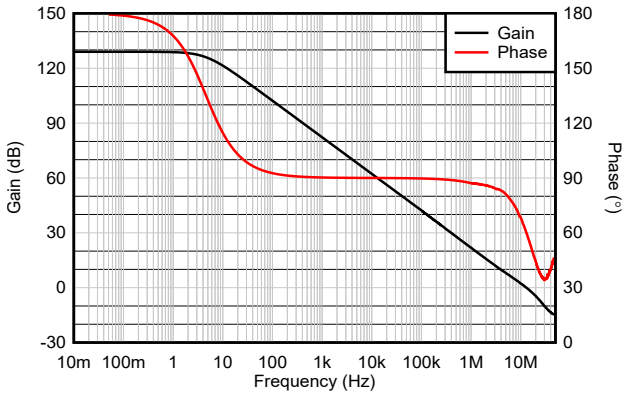

Figure 6-9. Open-Loop Gain and Phase vs Frequency

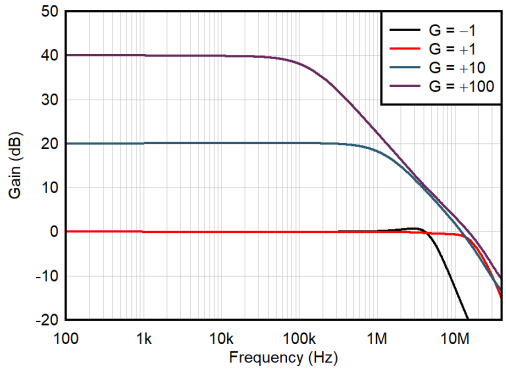

Figure 6-10. Closed-Loop Gain vs Frequency

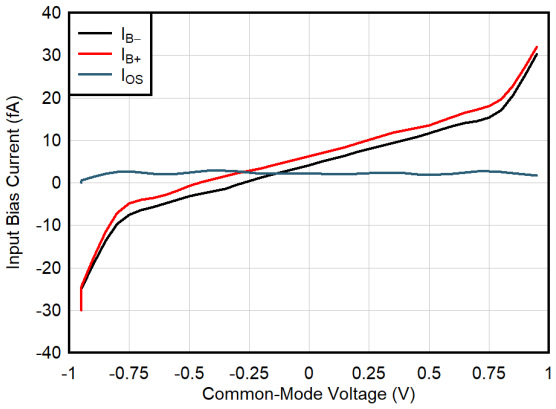

V_S = 1.7 V

Figure 6-11. Input Bias Current vs Common-Mode Voltage

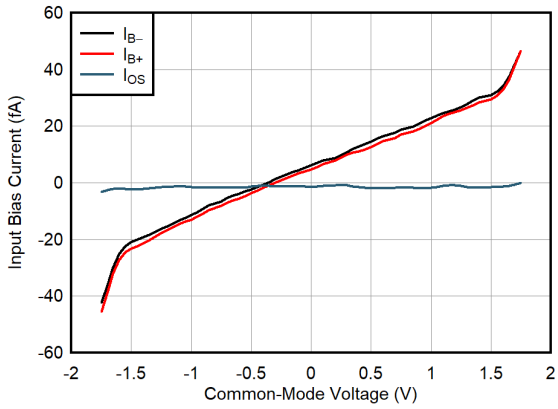

V_S = 3.3 V

Figure 6-12. Input Bias Current vs Common-Mode Voltage

Copyright © 2025 Texas Instruments Incorporated

6.8 Typical Characteristics (continued)

at T_A = 25°C, V_S = 5.5 V, V_{CM} = V_S / 2, R_{LOAD} = 10 kΩ connected to V_S / 2, and C_L = 100 pF (unless otherwise noted)

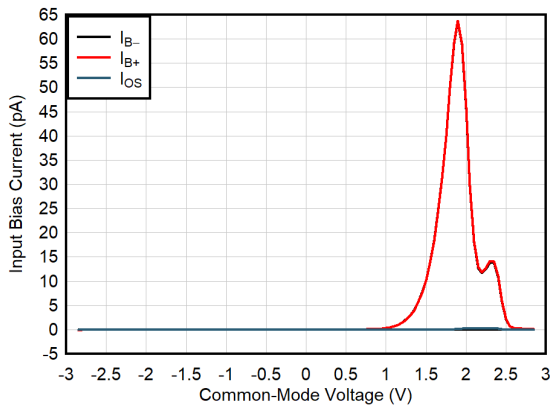

Figure 6-13. Input Bias Current vs Common-Mode Voltage

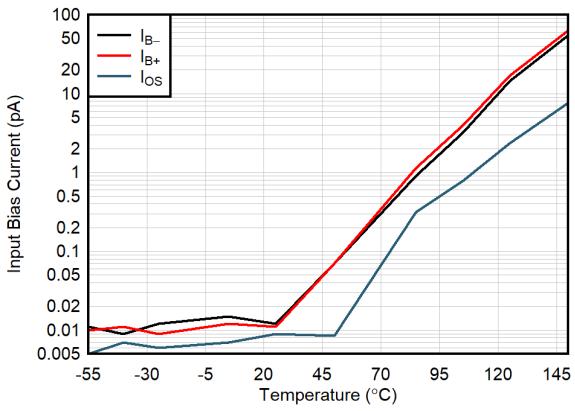

Figure 6-14. Input Bias Current vs Temperature

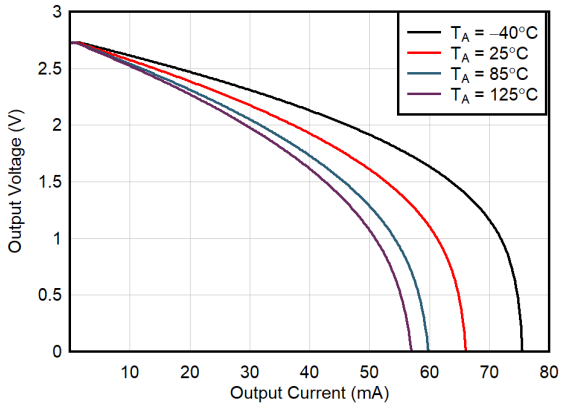

Figure 6-15. Output Voltage Swing vs Output Current (Sourcing)

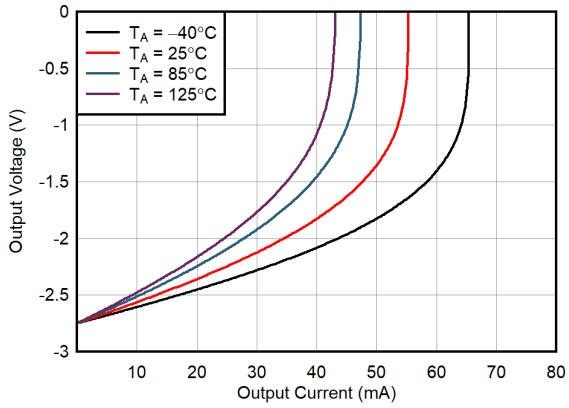

Figure 6-16. Output Voltage Swing vs Output Current (Sinking)

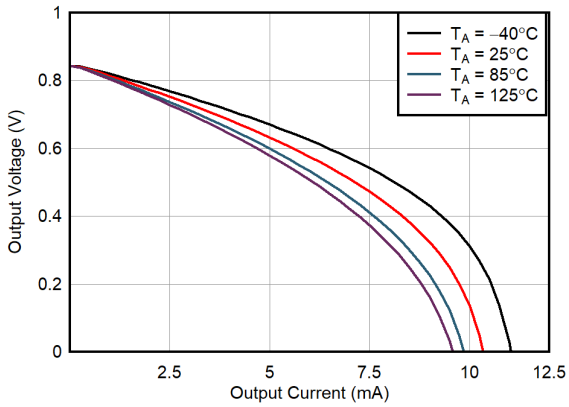

V_S = ±0.85 V

Figure 6-17. Output Voltage Swing vs Output Current (Sourcing)

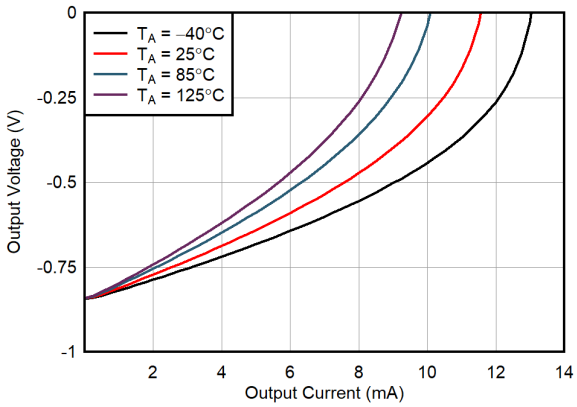

V_S = ±0.85 V

Figure 6-18. Output Voltage Swing vs Output Current (Sinking)

6.8 Typical Characteristics (continued)

at T_A = 25°C, V_S = 5.5 V, V_{CM} = V_S / 2, R_{LOAD} = 10 kΩ connected to V_S / 2, and C_L = 100 pF (unless otherwise noted)

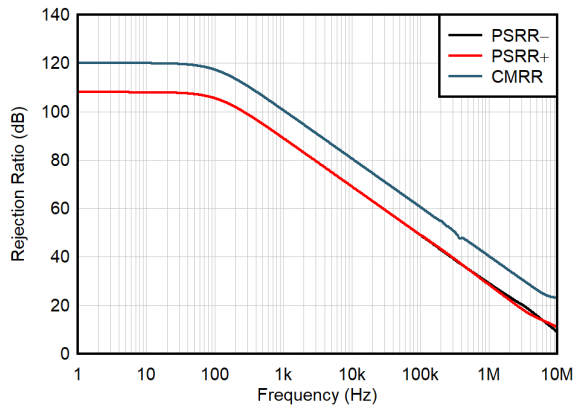

Figure 6-19. CMRR and PSRR vs Frequency

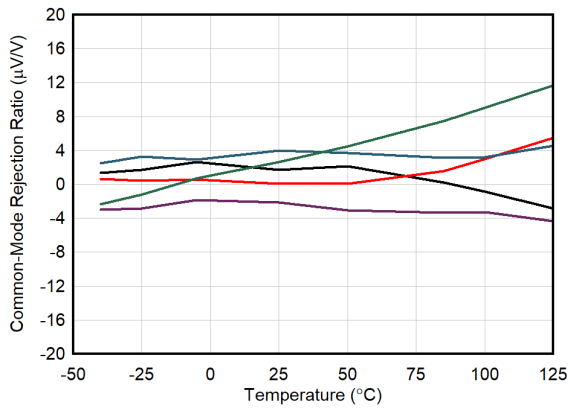

5 Units

Figure 6-20. CMRR vs Temperature

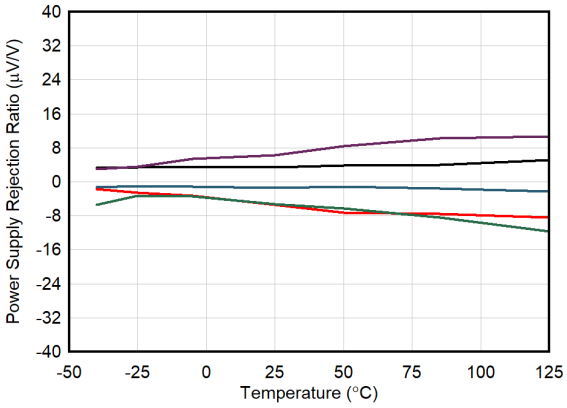

5 Units

Figure 6-21. PSRR vs Temperature

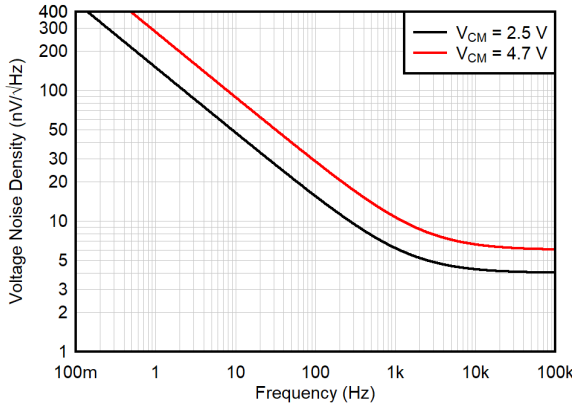

Figure 6-22. Voltage Noise vs Frequency

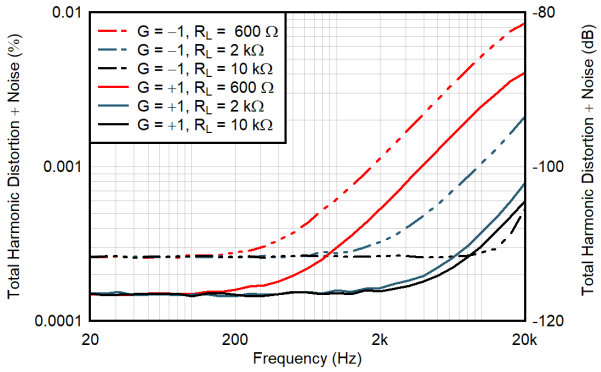

V_{OUT} = 1 V_{RMS}

Figure 6-23. THD+N Ratio vs Frequency

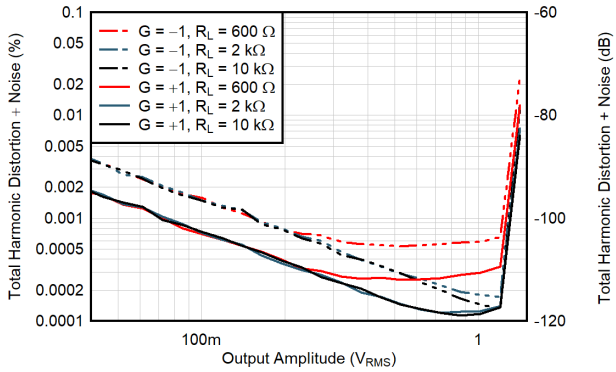

f = 1 kHz

Figure 6-24. THD+N vs Output Amplitude

Copyright © 2025 Texas Instruments Incorporated

6.8 Typical Characteristics (continued)

at T_A = 25°C, V_S = 5.5 V, V_{CM} = V_S / 2, R_{LOAD} = 10 kΩ connected to V_S / 2, and C_L = 100 pF (unless otherwise noted)

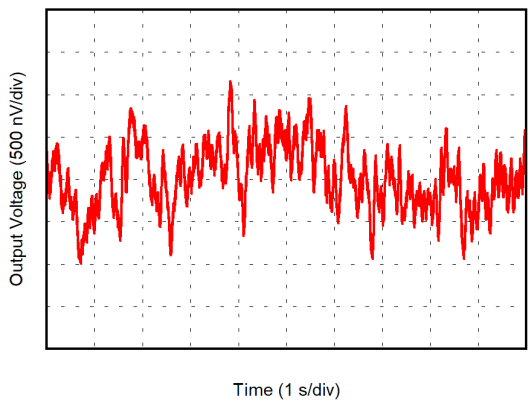

Figure 6-25. 0.1-Hz to 10-Hz Noise

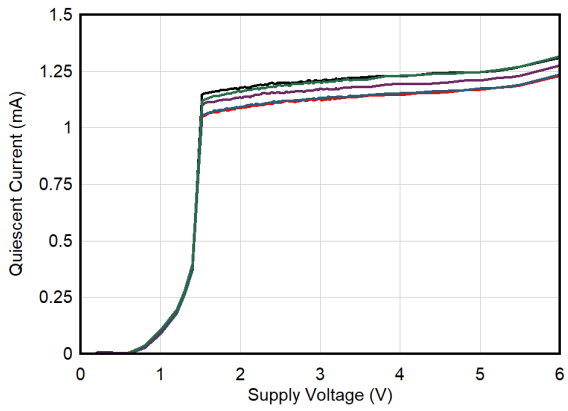

5 Units

Figure 6-26. Quiescent Current vs Supply Voltage

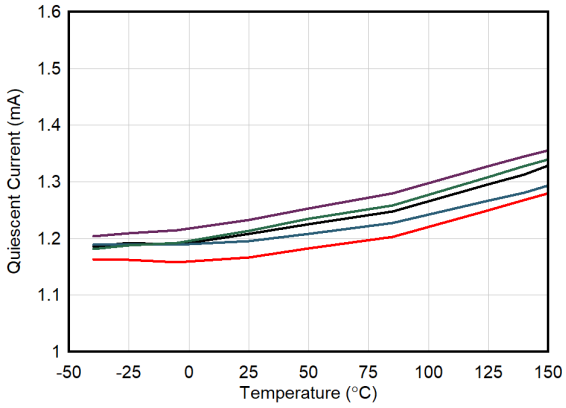

5 Units

Figure 6-27. Quiescent Current vs Temperature

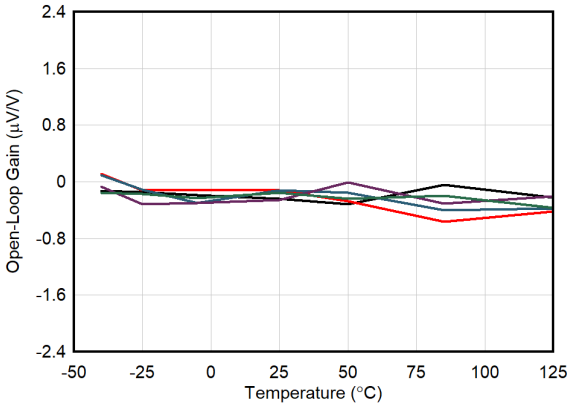

5 Units

Figure 6-28. Open-Loop Gain vs Temperature

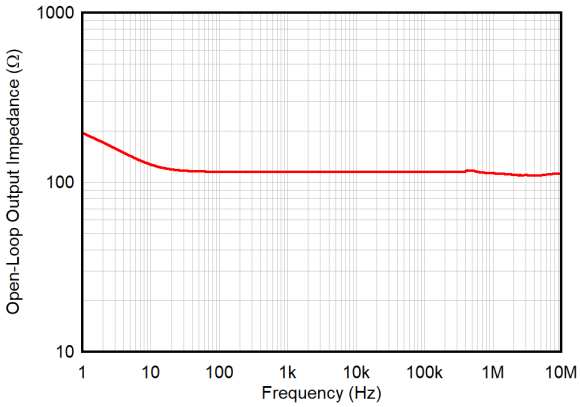

Figure 6-29. Open-Loop Output Impedance vs Frequency

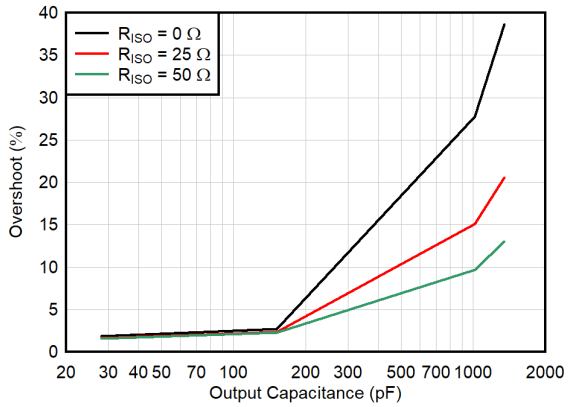

G = –1

Figure 6-30. Small-Signal Overshoot vs Capacitive Load (10-mV Step)

6.8 Typical Characteristics (continued)

at T_A = 25°C, V_S = 5.5 V, V_{CM} = V_S / 2, R_{LOAD} = 10 kΩ connected to V_S / 2, and C_L = 100 pF (unless otherwise noted)

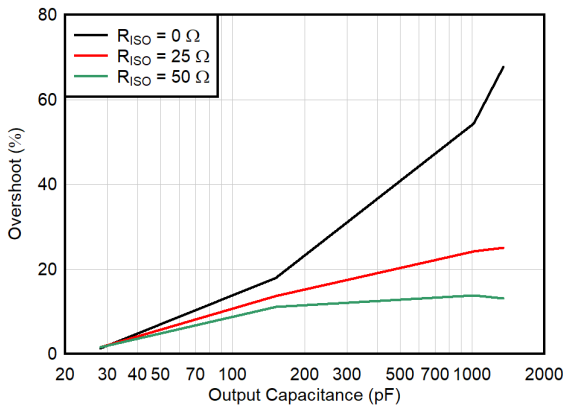

G = 1

Figure 6-31. Small-Signal Overshoot vs Capacitive Load (10-mV Step)

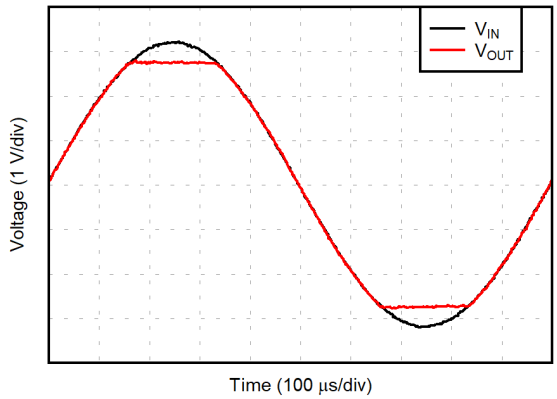

Figure 6-32. No Phase Reversal

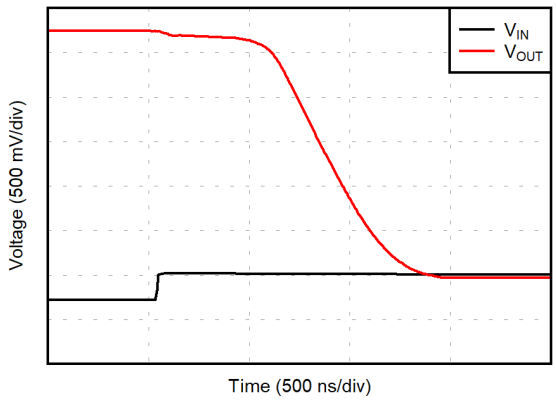

Figure 6-33. Positive Overload Recovery

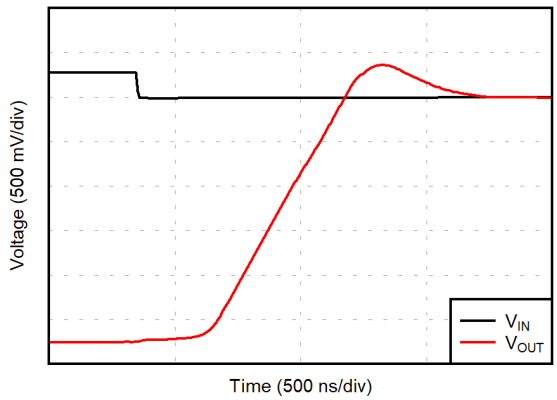

Figure 6-34. Negative Overload Recovery

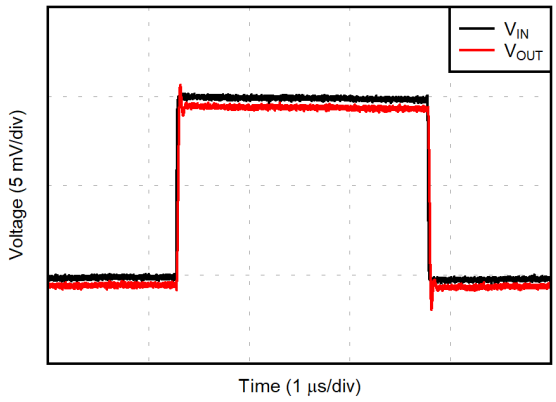

G = 1

Figure 6-35. Small-Signal Step Response (10-mV Step)

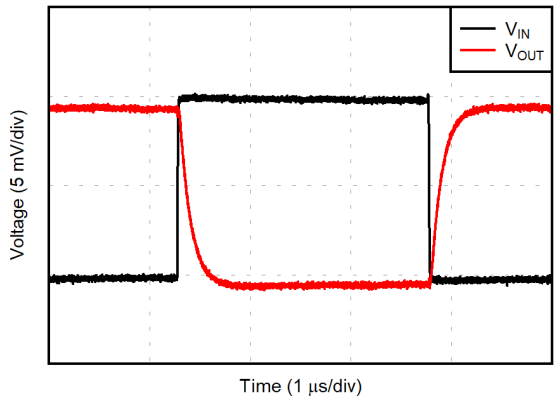

G = –1

Figure 6-36. Small-Signal Step Response (10-mV Step)

Copyright © 2025 Texas Instruments Incorporated

6.8 Typical Characteristics (continued)

at T_A = 25°C, V_S = 5.5 V, V_{CM} = V_S / 2, R_{LOAD} = 10 kΩ connected to V_S / 2, and C_L = 100 pF (unless otherwise noted)

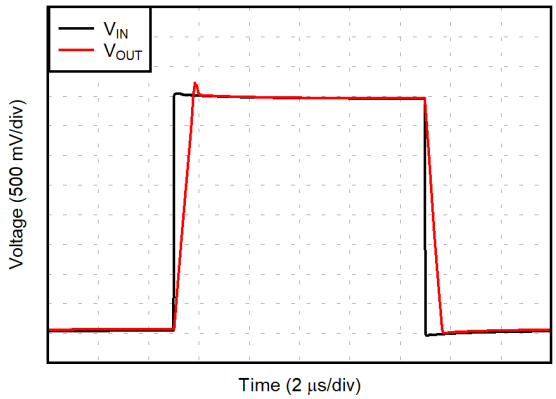

G = 1

Figure 6-37. Large-Signal Step Response (4-V Step)

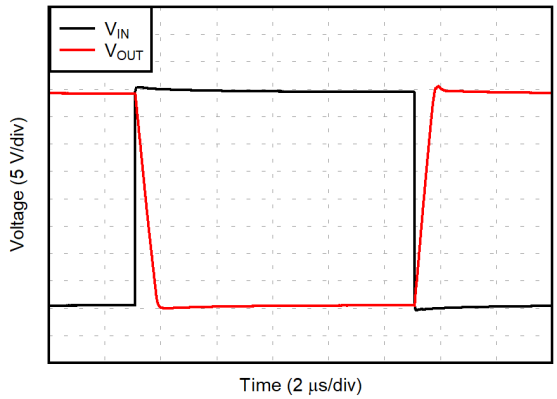

G = –1

Figure 6-38. Large-Signal Step Response (4-V Step)

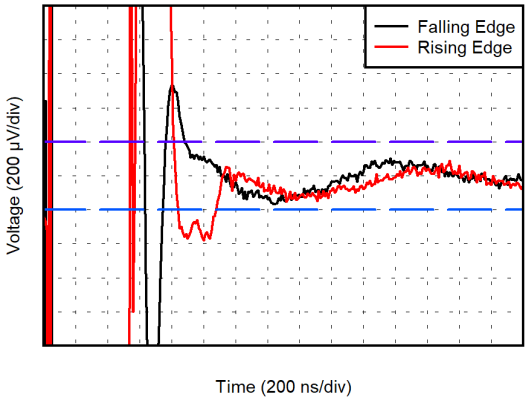

Figure 6-39. Settling Time

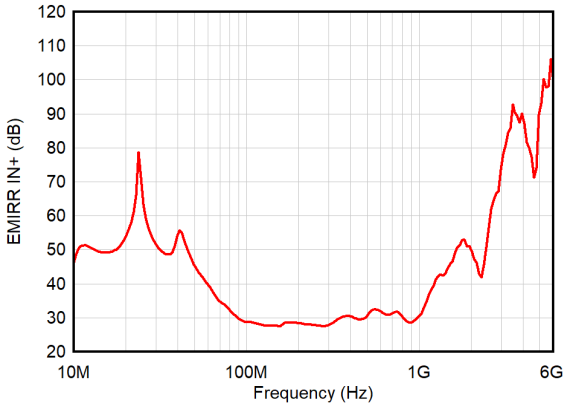

P_{RF} = –10 dBm

Figure 6-40. EMIRR vs Frequency

7 Detailed Description

7.1 Overview

The OPAx392 is a family of low offset, low-noise e-trim operational amplifiers (op amps) that uses a proprietary offset trim technique. These op amps offer ultra-low input offset voltage and drift and achieve excellent input and output dynamic linearity. The OPAx392 operate from 1.7 V to 5.5 V, are unity-gain stable, and are designed for a wide range of general-purpose and precision applications.

The amplifiers feature state-of-the-art CMOS technology and advanced design features that help achieve extremely low input bias current, wide input and output voltage ranges, high loop gain, and low, flat output impedance in small package options. The OPAx392 strengths also include 13-MHz bandwidth, 4.4-nV/√Hz noise spectral density, and low 1/f noise. These features make the OPAx392 an exceptional choice for interfacing with sensors, photodiodes, and high-performance analog-to-digital converters (ADCs).

7.2 Functional Block Diagram

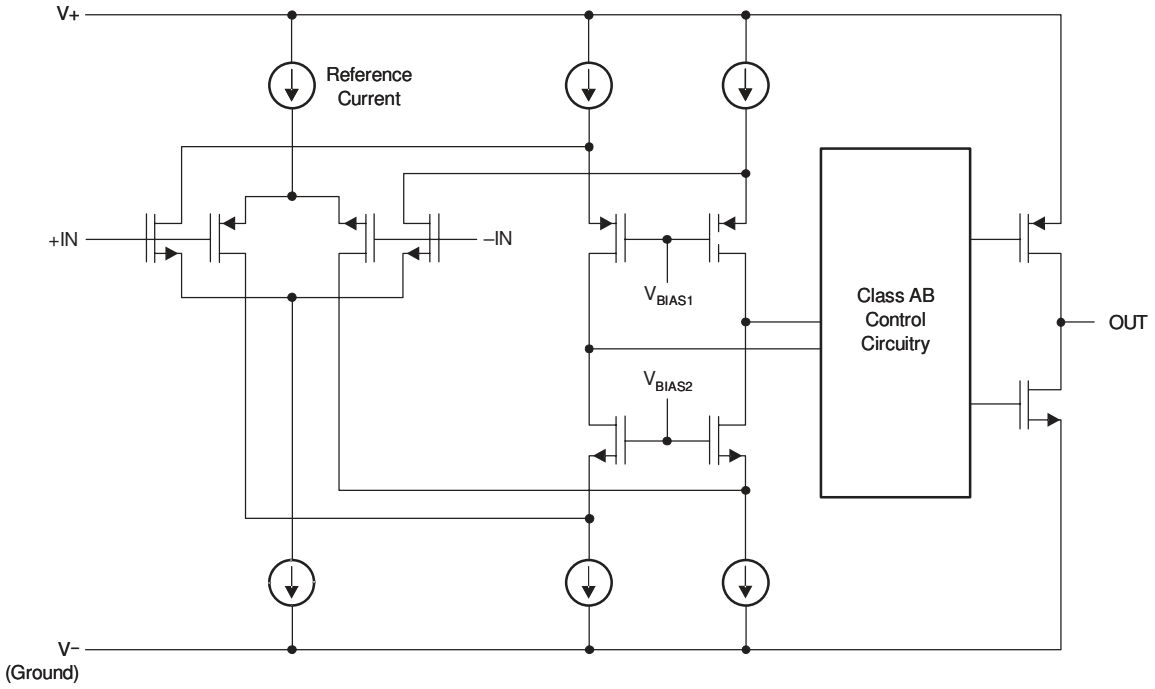

Copyright © 2025 Texas Instruments Incorporated

7.3 Feature Description

7.3.1 Low Operating Voltage

The OPAx392 family can be used with single or dual supplies from an operating range of V_S = 1.7 V (±0.85 V) up to 5.5 V (±2.75 V). The offset voltage is trimmed at 5.0 V, however, the device maintains ultra-low offset voltages down to V_S = 1.7 V.

Key parameters that vary over the supply voltage or temperature range are shown in the *Typical Characteristics*.

7.3.2 Low Input Bias Current

The typical input bias current of the OPAx392 is extremely low (typically 10 fA). Input bias current is dominated by leakage current from the ESD protection diodes, which is proportional to the area of the diode. The OPAx392 is able to achieve ultra-low input bias current as a result of modern process technology and advanced electrostatic discharge (ESD) protection design that minimizes the area of the diode.

In overdriven conditions, the bias current can increase significantly. The most common cause of an overdriven condition occurs when the operational amplifier is outside of the linear range of operation. When the output of the operational amplifier is driven to one of the supply rails, the feedback loop requirements cannot be satisfied and a differential input voltage develops across the input pins. This differential input voltage results in the forward-biasing of the ESD cells. Figure 7-1 shows the equivalent circuit.

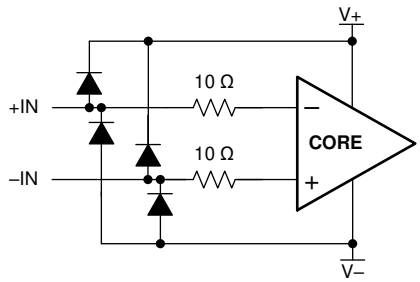

Figure 7-1. Equivalent Input Circuit

7.4 Device Functional Modes

The OPAx392 family is operational when the power-supply voltage is greater than 1.7 V (±0.85 V). For devices that use the EN function (see Section 5), the devices are disabled when the EN pin is low. In this state, quiescent current is significantly reduced, and the output is high impedance. The maximum specified power-supply voltage for the OPAx392 is 5.5 V (±2.75 V).

8 Application and Implementation

Note

Information in the following applications sections is not part of the TI component specification, and TI does not warrant its accuracy or completeness. TI's customers are responsible for determining suitability of components for their purposes, as well as validating and testing their design implementation to confirm system functionality.

8.1 Application Information

The OPAx392 is a unity-gain stable, precision operational amplifier family free from unexpected output and phase reversal. The use of proprietary e-trim operational amplifier technology gives the benefit of low input offset voltage over time and temperature, along with ultra-low input bias current. The OPAx392 are optimized for full rail-to-rail input, allowing for low-voltage, single-supply operation or split-supply use. These miniature, high-precision, low-noise amplifiers offer high-impedance inputs that have a common-mode range to the supply rail, with low offset across the supply range, and a rail-to-rail output that swings within 5 mV of the supplies under normal test conditions. The OPAx392 precision amplifiers are designed for upstream analog signal chain applications in low or high gains, as well as downstream signal chain functions such as DAC buffering.

8.2 Typical Application

This single-supply, low-side, bidirectional current-sensing design example detects load currents from –1 A to +1 A. The single-ended output spans from 110 mV to 3.19 V. This design uses the OPA392 because of the low offset voltage and rail-to-rail input and output. One of the amplifiers is configured as a difference amplifier and the other amplifier provides the reference voltage.

Figure 8-1 shows the schematic.

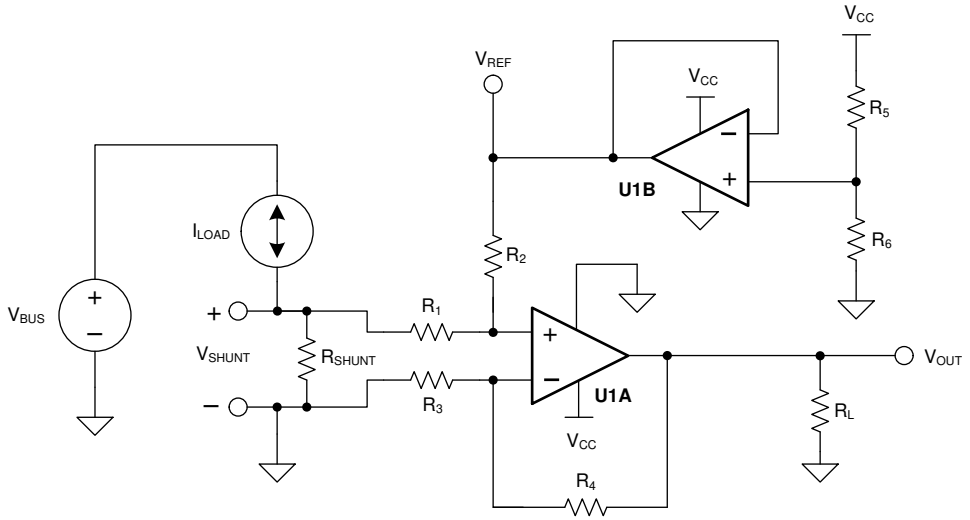

Figure 8-1. Bidirectional Current-Sensing Schematic

Copyright © 2025 Texas Instruments Incorporated

8.2.1 Design Requirements

This design example has the following requirements:

- Supply voltage: 3.3 V
- Input: –1 A to +1 A
- Output: 1.65 V ±1.54 V (110 mV to 3.19 V)

8.2.2 Detailed Design Procedure

The load current, I_{LOAD}, flows through the shunt resistor, R_{SHUNT}, to develop the shunt voltage, V_{SHUNT}. The shunt voltage is then amplified by the difference amplifier consisting of U1A and R_1 through R_4. The gain of the difference amplifier is set by the ratio of R_4 to R_3. To minimize errors, set $R_2 = R_4$ and $R_1 = R_3$. The reference voltage, V_{REF}, is supplied by buffering a resistor divider using U1B. The transfer function is given by Equation 1.

$$V_{OUT} = V_{SHUNT} \times Gain_{Diff_Amp} + V_{REF} \tag{1}$$

where

- $V_{SHUNT} = I_{LOAD} \times R_{SHUNT}$
- $Gain_{Diff_Amp} = \frac{R_4}{R_3}$
- $V_{REF} = V_{CC} \times \left(\frac{R_6}{R_5 + R_6}\right)$

There are two types of errors in this design: offset and gain. Gain errors are introduced by the tolerance of the shunt resistor and the ratios of R_4 to R_3 and, similarly, R_2 to R_1. Offset errors are introduced by the voltage divider (R_5 and R_6) and how closely the ratio of R_4 / R_3 matches R_2 / R_1. The latter value affects the CMRR of the difference amplifier, ultimately translating to an offset error.

The value of V_{SHUNT} is the ground potential for the system load because V_{SHUNT} is a low-side measurement. Therefore, a maximum value must be placed on V_{SHUNT}. In this design, the maximum value for V_{SHUNT} is set to 100 mV. Equation 2 calculates the maximum value of the shunt resistor given a maximum shunt voltage of 100 mV and maximum load current of 1 A.

$$R_{SHUNT(Max)} = \frac{V_{SHUNT(Max)}}{I_{LOAD(Max)}} = \frac{100\ mV}{1\ A} = 100\ m\Omega \tag{2}$$

The tolerance of R_{SHUNT} is directly proportional to cost. For this design, a shunt resistor with a tolerance of 0.5% is selected. If greater accuracy is required, select a 0.1% resistor or better.

The load current is bidirectional; therefore, the shunt voltage range is –100 mV to +100 mV. This voltage is divided down by R_1 and R_2 before reaching the operational amplifier, U1A. Make sure that the voltage present at the noninverting node of U1A is within the common-mode range of the device. Therefore, use an operational amplifier, such as the OPA392, that has a common-mode range that extends below the negative supply voltage. Finally, to minimize offset error, the OPA392 has a typical offset voltage of merely ±0.25 µV (±5 µV maximum).

Given a symmetric load current of –1 A to +1 A, the voltage divider resistors (R_5 and R_6) must be equal. To be consistent with the shunt resistor, a tolerance of 0.5% is selected. To minimize power consumption, 10-kΩ resistors are used.

Copyright © 2025 Texas Instruments Incorporated

To set the gain of the difference amplifier, the common-mode range and output swing of the OPA392 must be considered. Equation 3 and Equation 4 depict the typical common-mode range and maximum output swing, respectively, of the OPA392 given a 3.3-V supply.

$$-100\ \text{mV} < V_{CM} < 3.4\ \text{V} \tag{3}$$

$$100\ \text{mV} < V_{OUT} < 3.2\ \text{V} \tag{4}$$

The gain of the difference amplifier can now be calculated as shown in Equation 5:

$$\text{Gain}_{\text{Diff_Amp}} = \frac{V_{OUT_Max} - V_{OUT_Min}}{R_{SHUNT} \times (I_{MAX} - I_{MIN})} = \frac{3.2\ \text{V} - 100\ \text{mV}}{100\ \text{m}\Omega \times [1\ \text{A} - (-1\text{A})]} = 15.5\ \frac{\text{V}}{\text{V}} \tag{5}$$

The resistor value selected for R_1 and R_3 is 1 kΩ. 15.4 kΩ is selected for R_2 and R_4 because this number is the nearest standard value. Therefore, the calculated gain of the difference amplifier is 15.4 V/V.

The gain error of the circuit primarily depends on R_1 through R_4. As a result of this dependence, 0.1% resistors are selected. This configuration reduces the likelihood that the design requires a two-point calibration. A simple one-point calibration, if desired, removes the offset errors introduced by the 0.5% resistors.

8.2.3 Application Curve

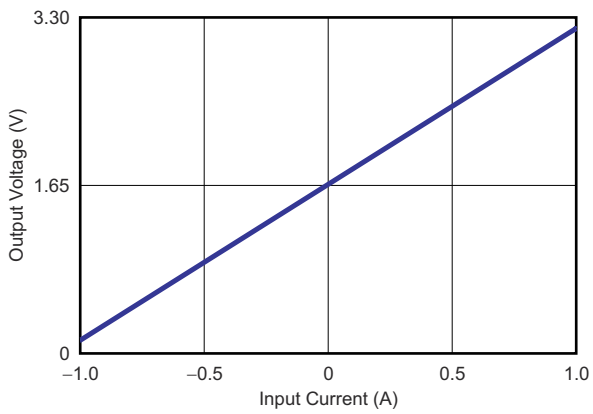

Figure 8-2. Bidirectional Current-Sensing Circuit Performance: Output Voltage vs Input Current

Copyright © 2025 Texas Instruments Incorporated

8.3 Power Supply Recommendations

The OPAx392 are specified for operation from 1.7 V to 5.5 V (±0.85 V to ±2.75 V).

> **CAUTION**
> Exceeding supply voltages listed in the *Absolute Maximum Ratings* table can permanently damage the device.

8.4 Layout

8.4.1 Layout Guidelines

Pay attention to good layout practice. Keep traces short, and when possible, use a printed-circuit board (PCB) ground plane with surface-mount components placed as close to the device pins as possible. Place a 0.1-µF capacitor closely across the supply pins. These guidelines must be applied throughout the analog circuit to improve performance and provide benefits such as reducing the electromagnetic interference (EMI) susceptibility.

For lowest offset voltage and precision performance, circuit layout and mechanical conditions must be optimized. Avoid temperature gradients that create thermoelectric (Seebeck) effects in the thermocouple junctions formed from connecting dissimilar conductors. These thermally-generated potentials can be made to cancel by making sure these potentials are equal on both input terminals. Other layout and design considerations include:

- Use low thermoelectric-coefficient conditions (avoid dissimilar metals).
- Use guard traces to minimize leakage current when ultra-low bias current is required.
- Thermally isolate components from power supplies or other heat sources.
- Shield operational amplifier and input circuitry from air currents, such as cooling fans.

Following these guidelines reduces the likelihood of junctions being at different temperatures, which can cause thermoelectric voltage drift of 0.1 µV/°C or higher, depending on materials used.

8.4.2 Layout Example

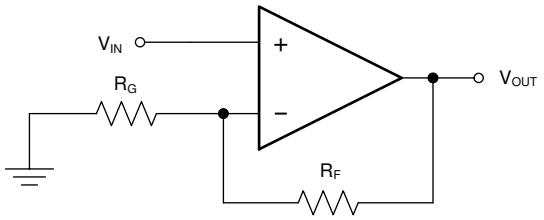

Figure 8-3. OPA392 Layout Schematic

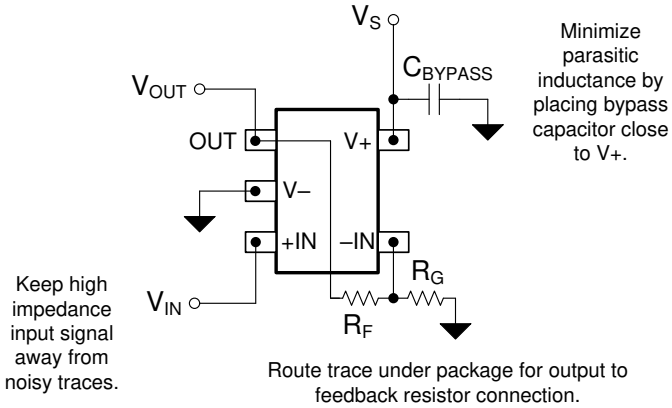

Figure 8-4. OPA392 Layout Example

9 Device and Documentation Support

9.1 Device Support

9.1.1 Development Support

9.1.1.1 PSpice® for TI

PSpice® for TI is a design and simulation environment that helps evaluate performance of analog circuits. Create subsystem designs and prototype solutions before committing to layout and fabrication, reducing development cost and time to market.

9.1.1.2 TINA-TI™ Simulation Software (Free Download)

TINA-TI™ simulation software is a simple, powerful, and easy-to-use circuit simulation program based on a SPICE engine. TINA-TI simulation software is a free, fully-functional version of the TINA™ software, preloaded with a library of macromodels, in addition to a range of both passive and active models. TINA-TI simulation software provides all the conventional dc, transient, and frequency domain analysis of SPICE, as well as additional design capabilities.

Available as a free download from the Design and simulation tools web page, TINA-TI simulation software offers extensive post-processing capability that allows users to format results in a variety of ways. Virtual instruments offer the ability to select input waveforms and probe circuit nodes, voltages, and waveforms, creating a dynamic quick-start tool.

Note

These files require that either the TINA software or TINA-TI software be installed. Download the free TINA-TI simulation software from the TINA-TI™ software folder.

9.2 Documentation Support

9.2.1 Related Documentation

For related documentation see the following:

- Texas Instruments, *Amplifier Input Common-Mode and Output-Swing Limitations* application note
- Texas Instruments, *Offset Correction Methods: Laser Trim, e-Trim™, and Chopper* application brief

9.3 Receiving Notification of Documentation Updates

To receive notification of documentation updates, navigate to the device product folder on ti.com. Click on *Notifications* to register and receive a weekly digest of any product information that has changed. For change details, review the revision history included in any revised document.

9.4 Support Resources

TI E2E™ support forums are an engineer's go-to source for fast, verified answers and design help — straight from the experts. Search existing answers or ask your own question to get the quick design help you need.

Linked content is provided "AS IS" by the respective contributors. They do not constitute TI specifications and do not necessarily reflect TI's views; see TI's Terms of Use.

9.5 Trademarks

e-trim™, TINA-TI™, and TI E2E™ are trademarks of Texas Instruments.
TINA™ is a trademark of DesignSoft, Inc.
PSpice® is a registered trademark of Cadence Design Systems, Inc.
All trademarks are the property of their respective owners.

Copyright © 2025 Texas Instruments Incorporated

9.6 Electrostatic Discharge Caution

This integrated circuit can be damaged by ESD. Texas Instruments recommends that all integrated circuits be handled with appropriate precautions. Failure to observe proper handling and installation procedures can cause damage.

ESD damage can range from subtle performance degradation to complete device failure. Precision integrated circuits may be more susceptible to damage because very small parametric changes could cause the device not to meet its published specifications.

9.7 Glossary

TI Glossary This glossary lists and explains terms, acronyms, and definitions.

10 Revision History

NOTE: Page numbers for previous revisions may differ from page numbers in the current version.

Changes from Revision H (April 2024) to Revision I (March 2025) **Page**

- Changed status of OPA4392 PW (TSSOP, 14) from preview to production data (active) and added associated content..... 1

Changes from Revision G (April 2024) to Revision H (November 2024) **Page**

- Changed status of OPA392 DCK (SC70, 5) and OPA2392 DSG (WSON, 8) packages from preview to production data (active) and added associated content..... 1
- Changed max V_{OS} of OPA2392DGK for overtemperature range condition from ±125µV to ±180µV based on the latest characterization data.....8
- Changed typical phase margin specification of OPA392YBJ and OPA2392D, DGK, and YBJ from 45° to 35° based on the latest characterization data.....8

Changes from Revision F (December 2023) to Revision G (April 2024) **Page**

- Changed OPA2392 DGK (VSSOP, 8) package status from advanced information (preview with samples) to production data (active) and added associated content..... 1

Changes from Revision E (September 2023) to Revision F (December 2023) **Page**

- Changed OPA392 YBJ (DSBGA, 6) package status from advanced information (preview with samples) to production data (active) and added associated content..... 1
- Changed OPA2392 D (SOIC, 8) package status from preview to production data (active) and added associated content.....1
- Changed OPA2392 DGK (VSSOP, 8) package status from preview to advanced information (preview with samples) and added associated content..... 1

11 Mechanical, Packaging, and Orderable Information

The following pages include mechanical packaging and orderable information. This information is the most current data available for the designated devices. This data is subject to change without notice and revision of this document. For browser-based versions of this data sheet, refer to the left-hand navigation.

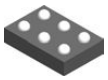

PACKAGE OUTLINE

YBJ0006

DSBGA - 0.35 mm max height

DIE SIZE BALL GRID ARRAY

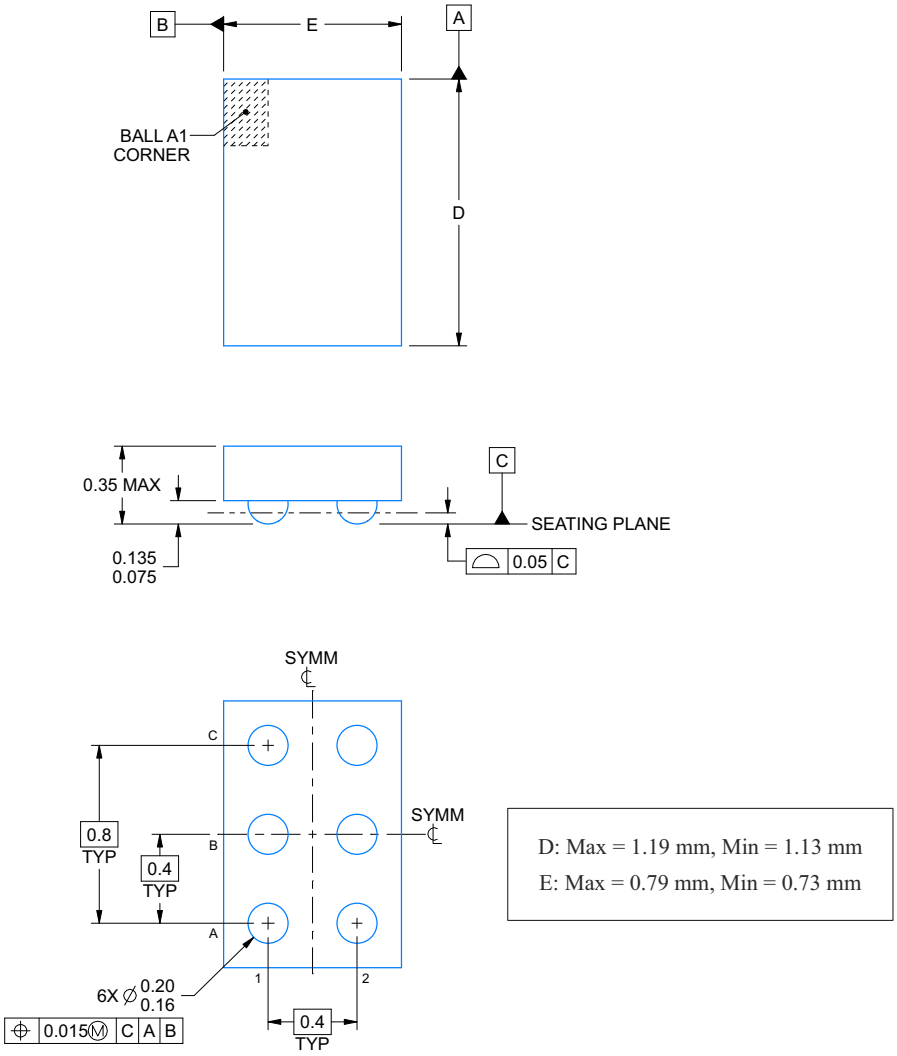

NOTES:

1. All linear dimensions are in millimeters. Any dimensions in parenthesis are for reference only. Dimensioning and tolerancing per ASME Y14.5M.
2. This drawing is subject to change without notice.

Copyright © 2025 Texas Instruments Incorporated

EXAMPLE BOARD LAYOUT

YBJ0006 **DSBGA - 0.35 mm max height**

DIE SIZE BALL GRID ARRAY

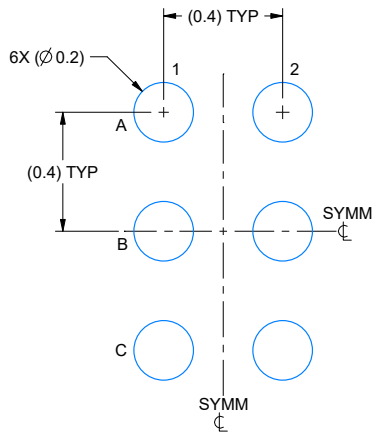

LAND PATTERN EXAMPLE
EXPOSED METAL SHOWN
SCALE: 50X

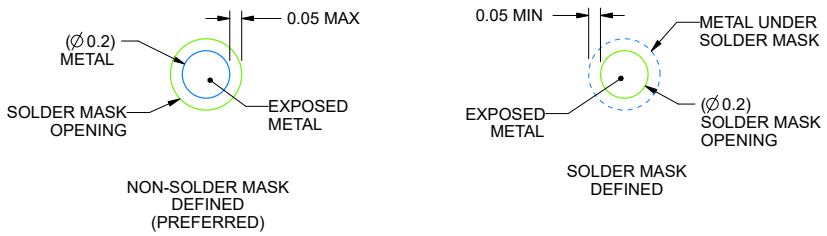

SOLDER MASK DETAILS
NOT TO SCALE

4226653/A 03/2021

NOTES: (continued)

3. Final dimensions may vary due to manufacturing tolerance considerations and also routing constraints. See Texas Instruments Literature No. SNVA009 (www.ti.com/lit/snva009).

Copyright © 2025 Texas Instruments Incorporated

EXAMPLE STENCIL DESIGN

YBJ0006 **DSBGA - 0.35 mm max height**

DIE SIZE BALL GRID ARRAY

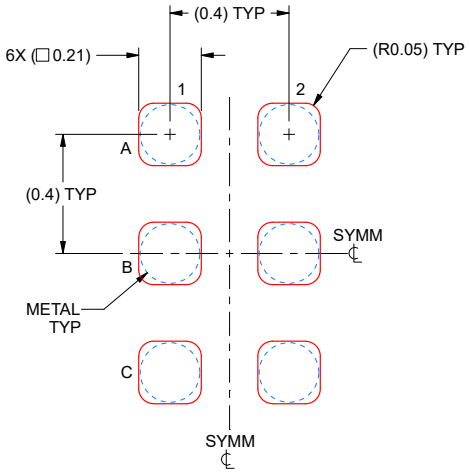

SOLDER PASTE EXAMPLE
BASED ON 0.1 mm THICK STENCIL
SCALE: 50X

4226653/A 03/2021

NOTES: (continued)

4. Laser cutting apertures with trapezoidal walls and rounded corners may offer better paste release.

Copyright © 2025 Texas Instruments Incorporated

PACKAGING INFORMATION

Orderable part number	Status (1)	Material type (2)	Package | Pins	Package qty | Carrier	RoHS (3)	Lead finish/ Ball material (4)	MSL rating/ Peak reflow (5)	Op temp (°C)	Part marking (6)
OPA2392DGKR	Active	Production	VSSOP (DGK) | 8	2500 | LARGE T&R	Yes	NIPDAU	Level-2-260C-1 YEAR	-40 to 125	3BJS
OPA2392DGKR.A	Active	Production	VSSOP (DGK) | 8	2500 | LARGE T&R	Yes	NIPDAU	Level-2-260C-1 YEAR	-40 to 125	3BJS
OPA2392DR	Active	Production	SOIC (D) | 8	3000 | LARGE T&R	Yes	NIPDAU	Level-1-260C-UNLIM	-40 to 125	O2392D
OPA2392DR.A	Active	Production	SOIC (D) | 8	3000 | LARGE T&R	Yes	NIPDAU	Level-1-260C-UNLIM	-40 to 125	O2392D
OPA2392DSGR	Active	Production	WSON (DSG) | 8	3000 | LARGE T&R	Yes	NIPDAU	Level-1-260C-UNLIM	-40 to 125	3B8H
OPA2392DSGR.A	Active	Production	WSON (DSG) | 8	3000 | LARGE T&R	Yes	NIPDAU	Level-1-260C-UNLIM	-40 to 125	3B8H
OPA2392YBJR	Active	Production	DSBGA (YBJ) | 9	3000 | LARGE T&R	Yes	SNAGCU	Level-1-260C-UNLIM	-40 to 125	O23
OPA2392YBJR.A	Active	Production	DSBGA (YBJ) | 9	3000 | LARGE T&R	Yes	SNAGCU	Level-1-260C-UNLIM	-40 to 125	O23
OPA2392YBJT	Active	Production	DSBGA (YBJ) | 9	250 | SMALL T&R	Yes	SNAGCU	Level-1-260C-UNLIM	-40 to 125	O23
OPA2392YBJT.A	Active	Production	DSBGA (YBJ) | 9	250 | SMALL T&R	Yes	SNAGCU	Level-1-260C-UNLIM	-40 to 125	O23
OPA392DBVR	Active	Production	SOT-23 (DBV) | 5	3000 | LARGE T&R	Yes	NIPDAU	Level-1-260C-UNLIM	-40 to 125	23GT
OPA392DBVR.A	Active	Production	SOT-23 (DBV) | 5	3000 | LARGE T&R	Yes	NIPDAU	Level-1-260C-UNLIM	-40 to 125	23GT
OPA392DBVT	Active	Production	SOT-23 (DBV) | 5	250 | SMALL T&R	Yes	NIPDAU	Level-1-260C-UNLIM	-40 to 125	23GT
OPA392DBVT.A	Active	Production	SOT-23 (DBV) | 5	250 | SMALL T&R	Yes	NIPDAU	Level-1-260C-UNLIM	-40 to 125	23GT
OPA392DCKR	Active	Production	SC70 (DCK) | 5	3000 | LARGE T&R	Yes	NIPDAU	Level-1-260C-UNLIM	-40 to 125	1QL
OPA392DCKR.A	Active	Production	SC70 (DCK) | 5	3000 | LARGE T&R	Yes	NIPDAU	Level-1-260C-UNLIM	-40 to 125	1QL
OPA392YBJR	Active	Production	DSBGA (YBJ) | 6	3000 | LARGE T&R	Yes	SNAGCU	Level-1-260C-UNLIM	-40 to 125	PL
OPA392YBJR.A	Active	Production	DSBGA (YBJ) | 6	3000 | LARGE T&R	Yes	SNAGCU	Level-1-260C-UNLIM	-40 to 125	PL
OPA4392PWR	Active	Production	TSSOP (PW) | 14	3000 | LARGE T&R	Yes	NIPDAU	Level-2-260C-1 YEAR	-40 to 125	OPA4392
OPA4392PWR.A	Active	Production	TSSOP (PW) | 14	3000 | LARGE T&R	Yes	NIPDAU	Level-2-260C-1 YEAR	See OPA4392PWR	OPA4392

(1) **Status:** For more details on status, see our product life cycle.

(2) **Material type:** When designated, preproduction parts are prototypes/experimental devices, and are not yet approved or released for full production. Testing and final process, including without limitation quality assurance, reliability performance testing, and/or process qualification, may not yet be complete, and this item is subject to further changes or possible discontinuation. If available for ordering, purchases will be subject to an additional waiver at checkout, and are intended for early internal evaluation purposes only. These items are sold without warranties of any kind.

(3) **RoHS values:** Yes, No, RoHS Exempt. See the TI RoHS Statement for additional information and value definition.

(4) **Lead finish/Ball material:** Parts may have multiple material finish options. Finish options are separated by a vertical ruled line. Lead finish/Ball material values may wrap to two lines if the finish value exceeds the maximum column width.

(5) **MSL rating/Peak reflow:** The moisture sensitivity level ratings and peak solder (reflow) temperatures. In the event that a part has multiple moisture sensitivity ratings, only the lowest level per JEDEC standards is shown. Refer to the shipping label for the actual reflow temperature that will be used to mount the part to the printed circuit board.

(6) **Part marking:** There may be an additional marking, which relates to the logo, the lot trace code information, or the environmental category of the part.

Multiple part markings will be inside parentheses. Only one part marking contained in parentheses and separated by a "~" will appear on a part. If a line is indented then it is a continuation of the previous line and the two combined represent the entire part marking for that device.

Important Information and Disclaimer: The information provided on this page represents TI's knowledge and belief as of the date that it is provided. TI bases its knowledge and belief on information provided by third parties, and makes no representation or warranty as to the accuracy of such information. Efforts are underway to better integrate information from third parties. TI has taken and continues to take reasonable steps to provide representative and accurate information but may not have conducted destructive testing or chemical analysis on incoming materials and chemicals. TI and TI suppliers consider certain information to be proprietary, and thus CAS numbers and other limited information may not be available for release.

In no event shall TI's liability arising out of such information exceed the total purchase price of the TI part(s) at issue in this document sold by TI to Customer on an annual basis.

TAPE AND REEL INFORMATION

REEL DIMENSIONS

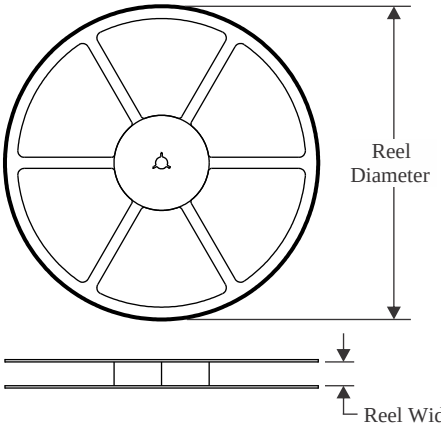

TAPE DIMENSIONS

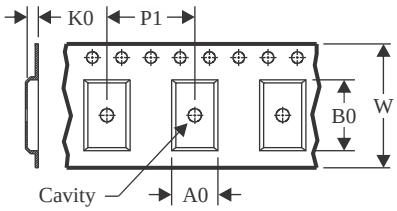

A0	Dimension designed to accommodate the component width
B0	Dimension designed to accommodate the component length
K0	Dimension designed to accommodate the component thickness
W	Overall width of the carrier tape
P1	Pitch between successive cavity centers

QUADRANT ASSIGNMENTS FOR PIN 1 ORIENTATION IN TAPE

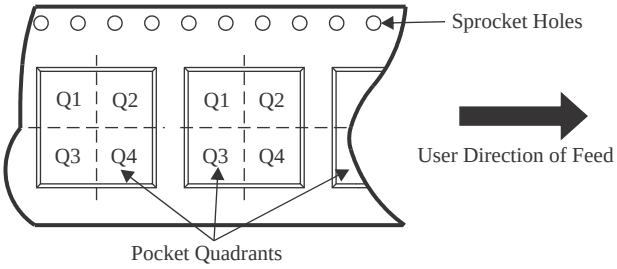

*All dimensions are nominal

Device	Package Type	Package Drawing	Pins	SPQ	Reel Diameter (mm)	Reel Width W1 (mm)	A0 (mm)	B0 (mm)	K0 (mm)	P1 (mm)	W (mm)	Pin1 Quadrant
OPA2392DGKR	VSSOP	DGK	8	2500	330.0	12.4	5.3	3.4	1.4	8.0	12.0	Q1
OPA2392DR	SOIC	D	8	3000	330.0	12.4	6.4	5.2	2.1	8.0	12.0	Q1
OPA2392DSGR	WSON	DSG	8	3000	180.0	8.4	2.3	2.3	1.15	4.0	8.0	Q2
OPA2392YBJR	DSBGA	YBJ	9	3000	180.0	8.4	1.26	1.26	0.43	4.0	8.0	Q1
OPA2392YBJT	DSBGA	YBJ	9	250	180.0	8.4	1.26	1.26	0.43	4.0	8.0	Q1
OPA392DBVR	SOT-23	DBV	5	3000	178.0	9.0	3.3	3.2	1.4	4.0	8.0	Q3
OPA392DBVT	SOT-23	DBV	5	250	178.0	9.0	3.3	3.2	1.4	4.0	8.0	Q3
OPA392DCKR	SC70	DCK	5	3000	178.0	9.0	2.4	2.5	1.2	4.0	8.0	Q3
OPA392YBJR	DSBGA	YBJ	6	3000	180.0	8.4	0.85	1.27	0.43	2.0	8.0	Q1
OPA4392PWR	TSSOP	PW	14	3000	330.0	12.4	6.9	5.6	1.6	8.0	12.0	Q1

TAPE AND REEL BOX DIMENSIONS

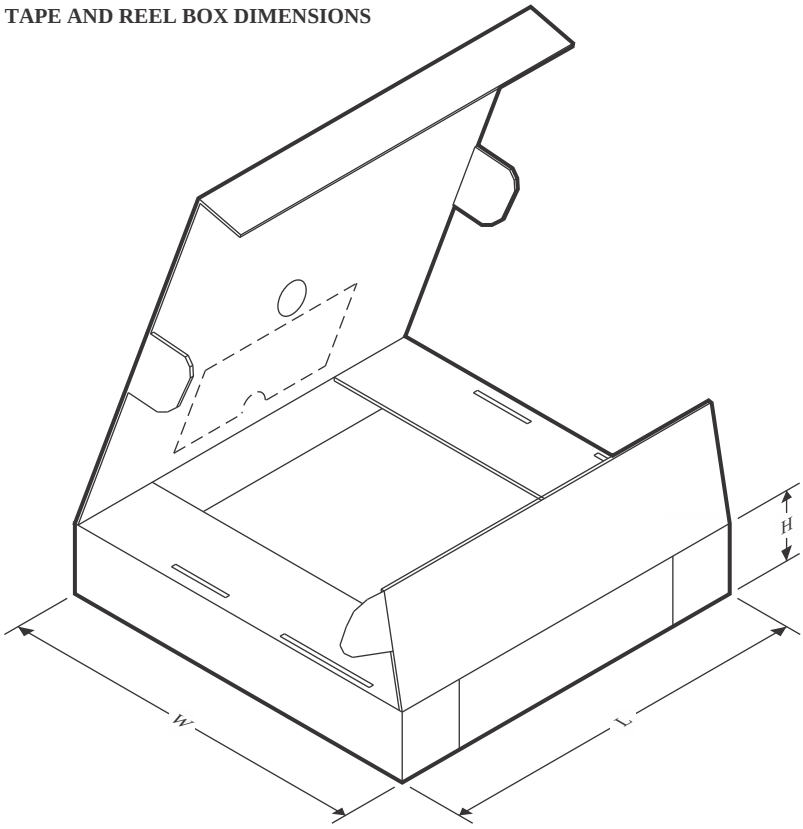

*All dimensions are nominal

Device	Package Type	Package Drawing	Pins	SPQ	Length (mm)	Width (mm)	Height (mm)
OPA2392DGKR	VSSOP	DGK	8	2500	353.0	353.0	32.0
OPA2392DR	SOIC	D	8	3000	356.0	356.0	35.0
OPA2392DSGR	WSON	DSG	8	3000	210.0	185.0	35.0
OPA2392YBJR	DSBGA	YBJ	9	3000	182.0	182.0	20.0
OPA2392YBJT	DSBGA	YBJ	9	250	182.0	182.0	20.0
OPA392DBVR	SOT-23	DBV	5	3000	180.0	180.0	18.0
OPA392DBVT	SOT-23	DBV	5	250	180.0	180.0	18.0
OPA392DCKR	SC70	DCK	5	3000	180.0	180.0	18.0
OPA392YBJR	DSBGA	YBJ	6	3000	182.0	182.0	20.0
OPA4392PWR	TSSOP	PW	14	3000	353.0	353.0	32.0

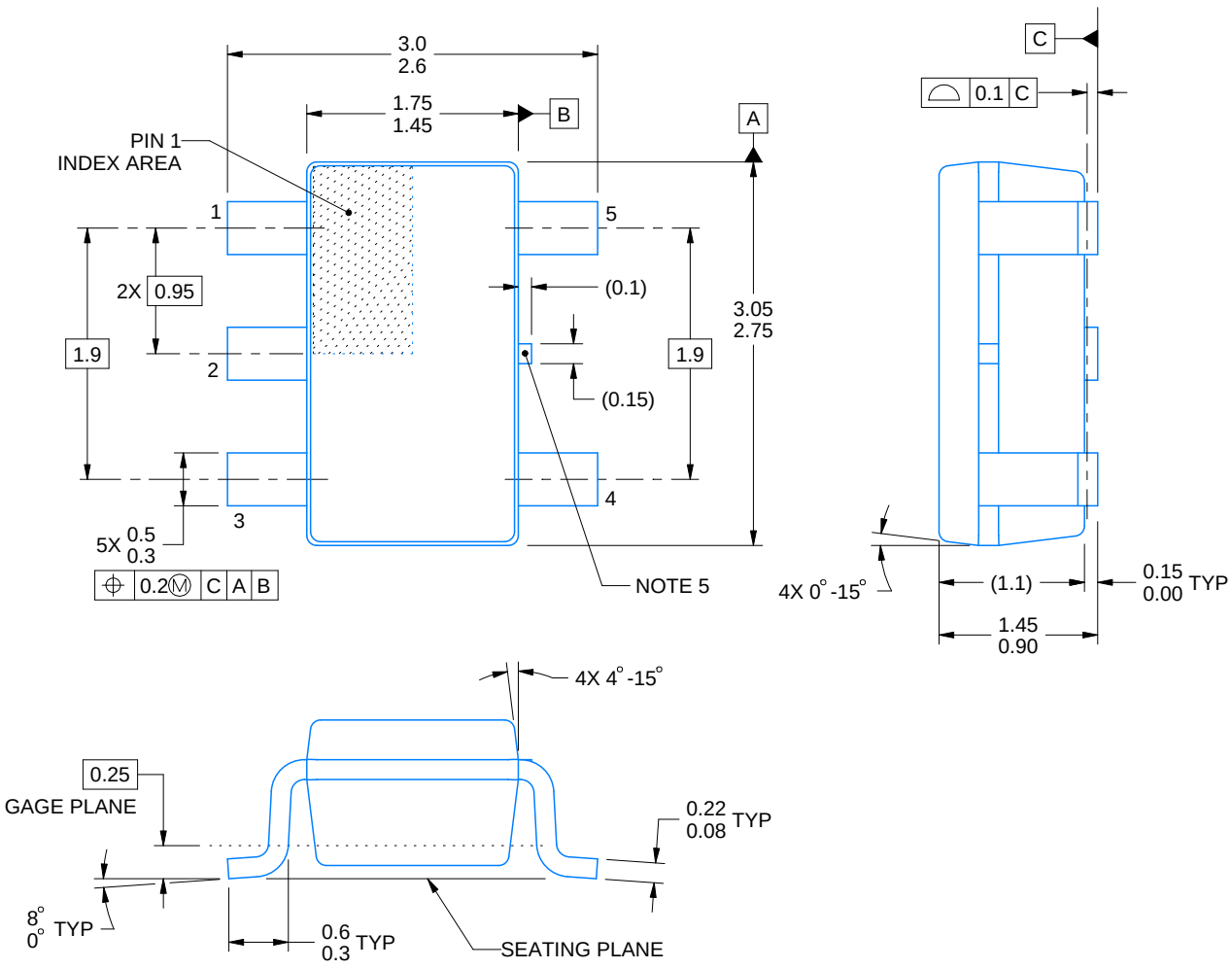

4214839/K 08/2024

NOTES:

1. All linear dimensions are in millimeters. Any dimensions in parenthesis are for reference only. Dimensioning and tolerancing per ASME Y14.5M.
2. This drawing is subject to change without notice.
3. Refernce JEDEC MO-178.
4. Body dimensions do not include mold flash, protrusions, or gate burrs. Mold flash, protrusions, or gate burrs shall not exceed 0.25 mm per side.
5. Support pin may differ or may not be present.

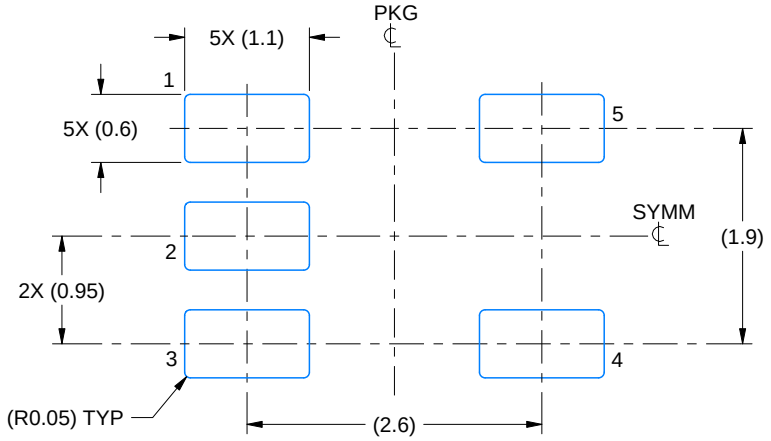

LAND PATTERN EXAMPLE
EXPOSED METAL SHOWN
SCALE:15X

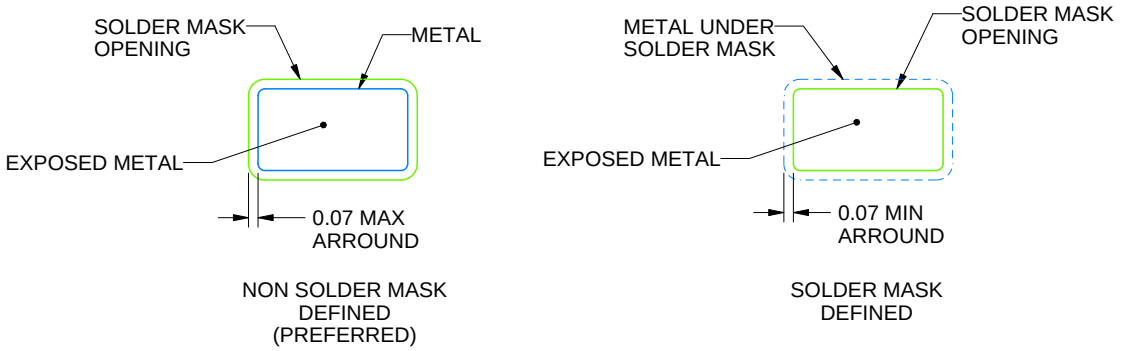

SOLDER MASK DETAILS

4214839/K 08/2024

NOTES: (continued)

6. Publication IPC-7351 may have alternate designs.
7. Solder mask tolerances between and around signal pads can vary based on board fabrication site.

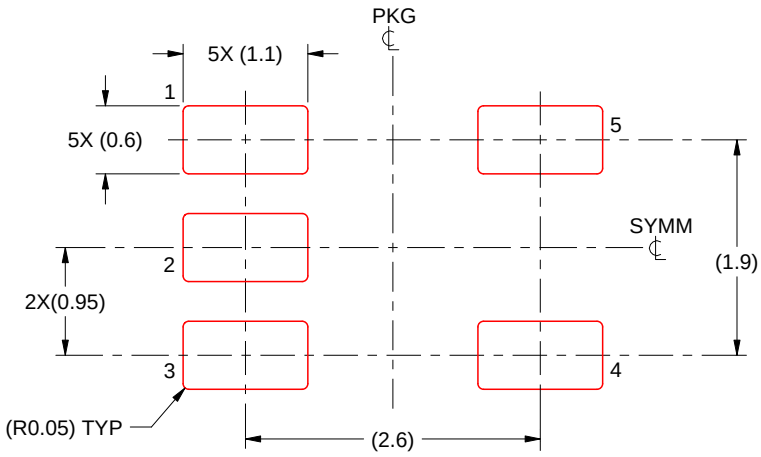

SOLDER PASTE EXAMPLE
BASED ON 0.125 mm THICK STENCIL
SCALE:15X

4214839/K 08/2024

NOTES: (continued)

8. Laser cutting apertures with trapezoidal walls and rounded corners may offer better paste release. IPC-7525 may have alternate design recommendations.
9. Board assembly site may have different recommendations for stencil design.

PACKAGE OUTLINE

DGK0008A

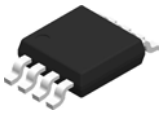

VSSOP - 1.1 mm max height

SMALL OUTLINE PACKAGE

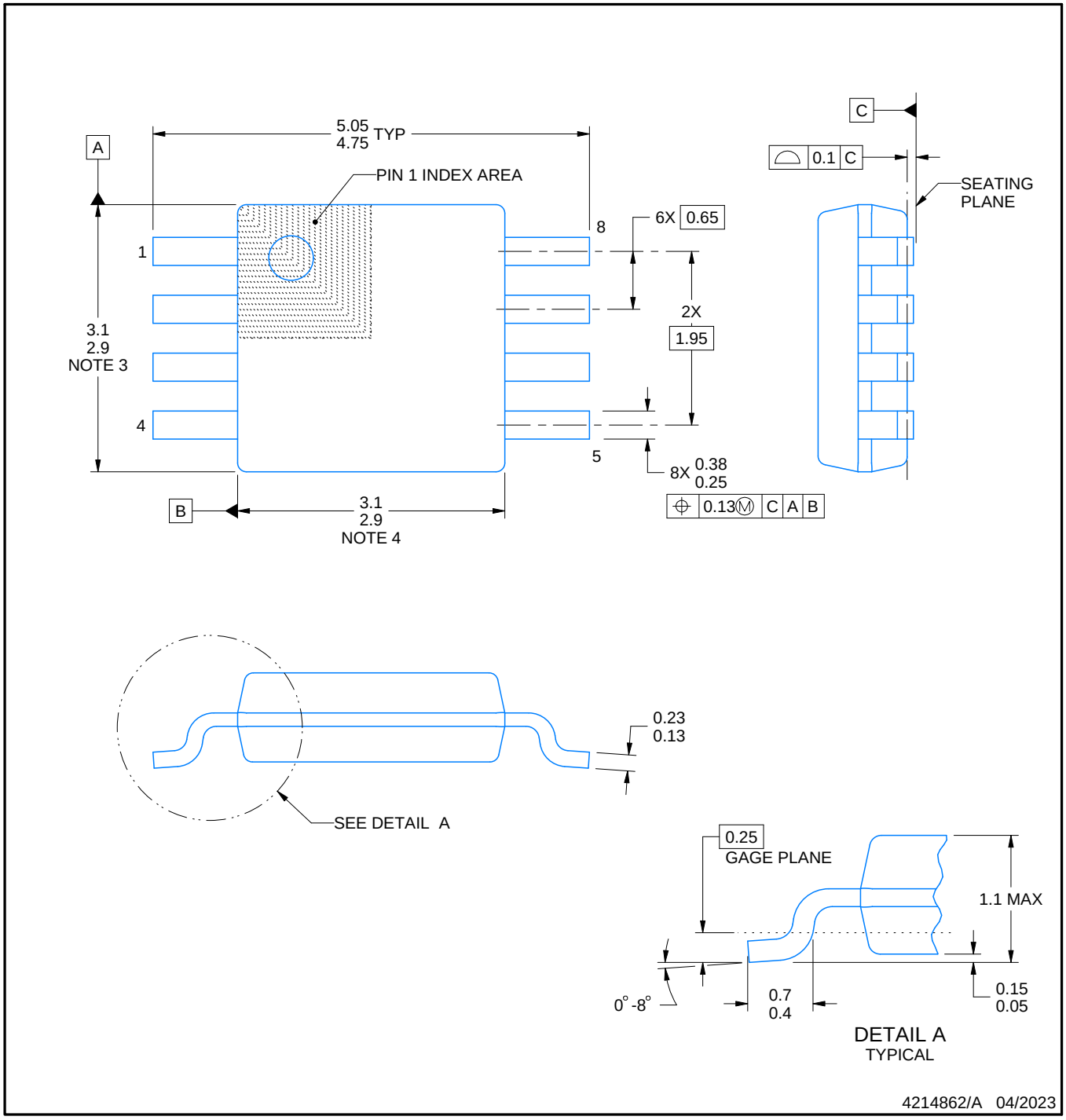

PowerPAD is a trademark of Texas Instruments.

NOTES:

1. All linear dimensions are in millimeters. Any dimensions in parenthesis are for reference only. Dimensioning and tolerancing per ASME Y14.5M.
2. This drawing is subject to change without notice.
3. This dimension does not include mold flash, protrusions, or gate burrs. Mold flash, protrusions, or gate burrs shall not exceed 0.15 mm per side.
4. This dimension does not include interlead flash. Interlead flash shall not exceed 0.25 mm per side.
5. Reference JEDEC registration MO-187.

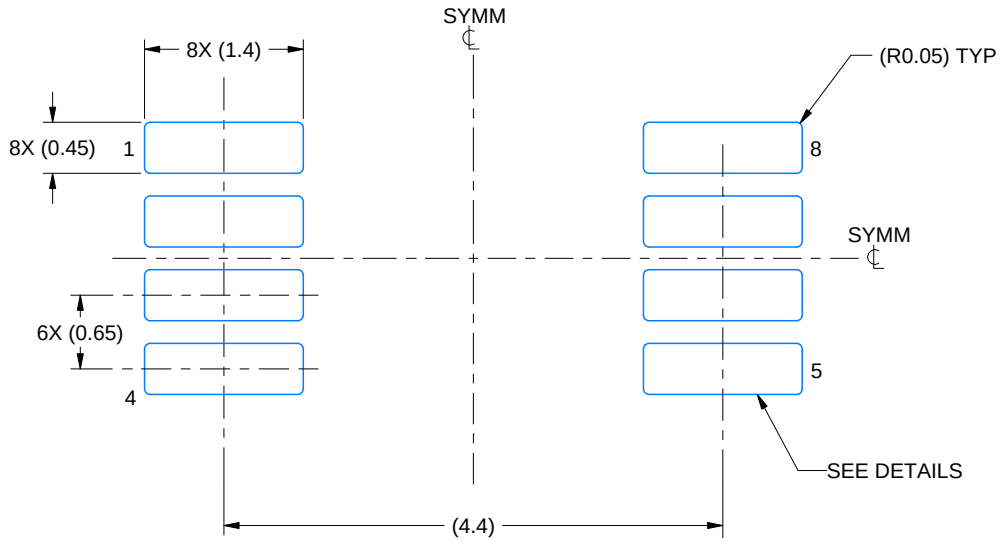

LAND PATTERN EXAMPLE
EXPOSED METAL SHOWN
SCALE: 15X

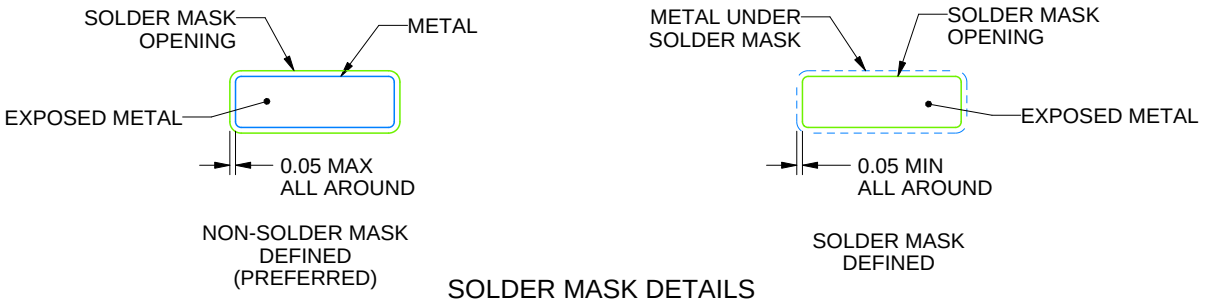

SOLDER MASK DETAILS

4214862/A 04/2023

NOTES: (continued)

6. Publication IPC-7351 may have alternate designs.
7. Solder mask tolerances between and around signal pads can vary based on board fabrication site.
8. Vias are optional depending on application, refer to device data sheet. If any vias are implemented, refer to their locations shown on this view. It is recommended that vias under paste be filled, plugged or tented.
9. Size of metal pad may vary due to creepage requirement.

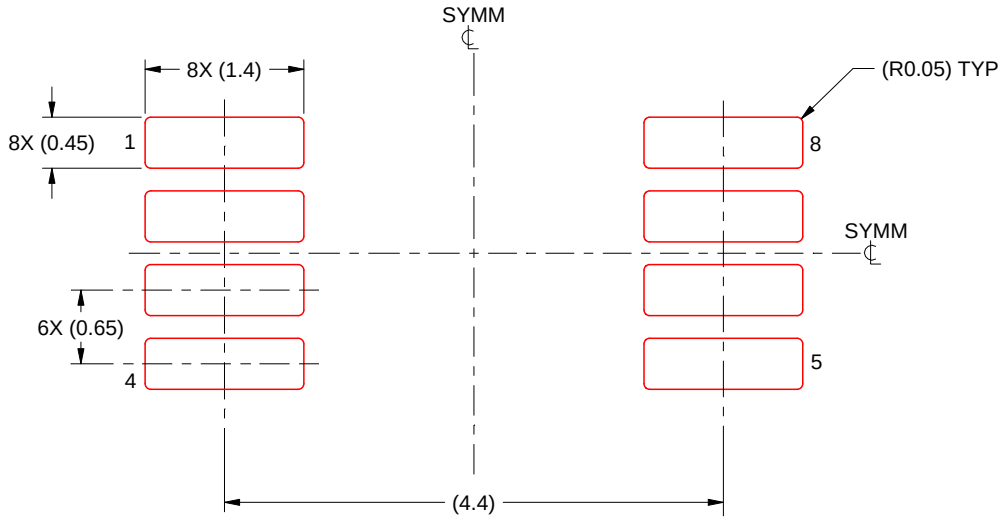

SOLDER PASTE EXAMPLE
SCALE: 15X

4214862/A 04/2023

NOTES: (continued)

11. Laser cutting apertures with trapezoidal walls and rounded corners may offer better paste release. IPC-7525 may have alternate design recommendations.
12. Board assembly site may have different recommendations for stencil design.

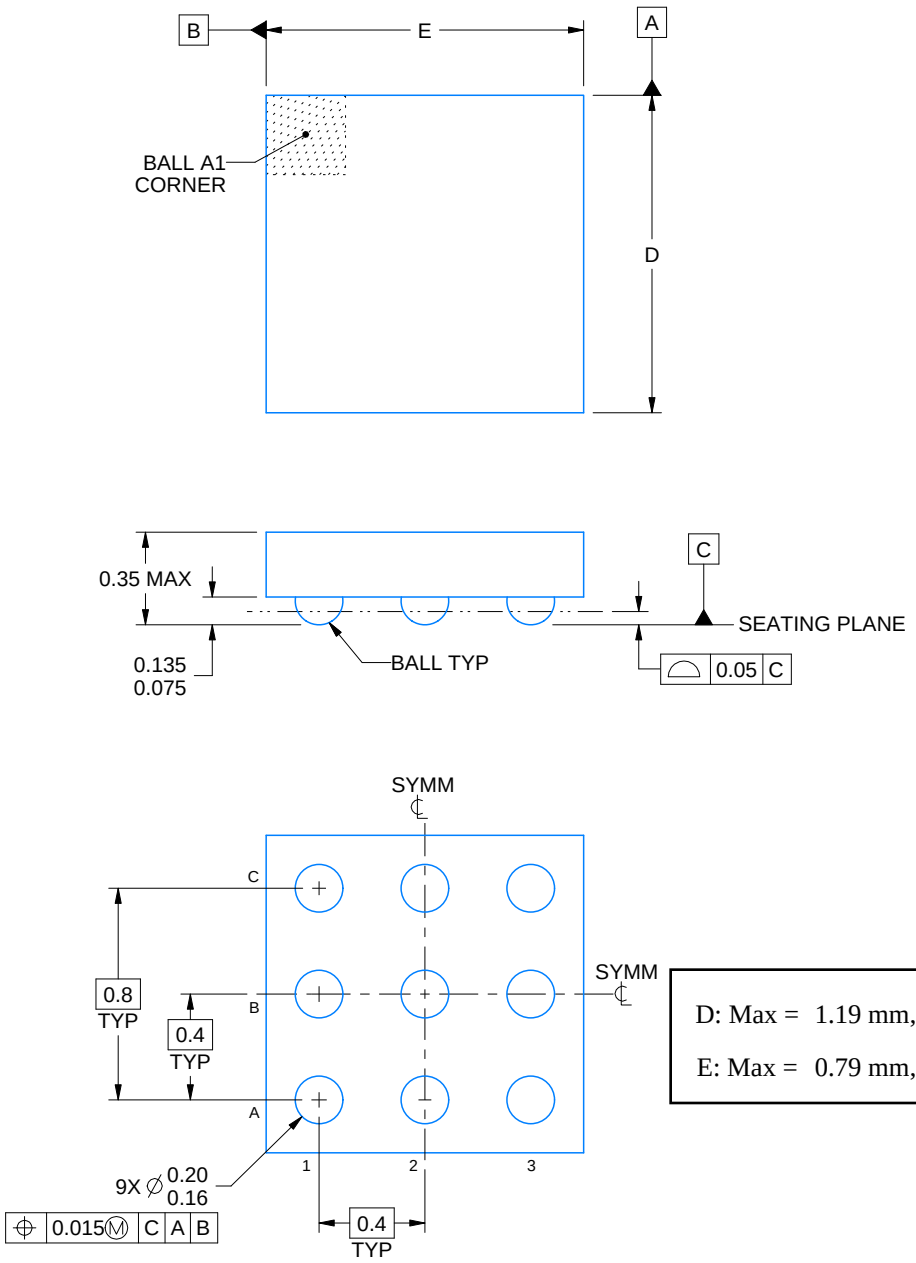

D: Max = 1.19 mm, Min = 1.13 mm

E: Max = 0.79 mm, Min = 0.73 mm

4225688/A 02/2020

NOTES:

1. All linear dimensions are in millimeters. Any dimensions in parenthesis are for reference only. Dimensioning and tolerancing per ASME Y14.5M.
2. This drawing is subject to change without notice.

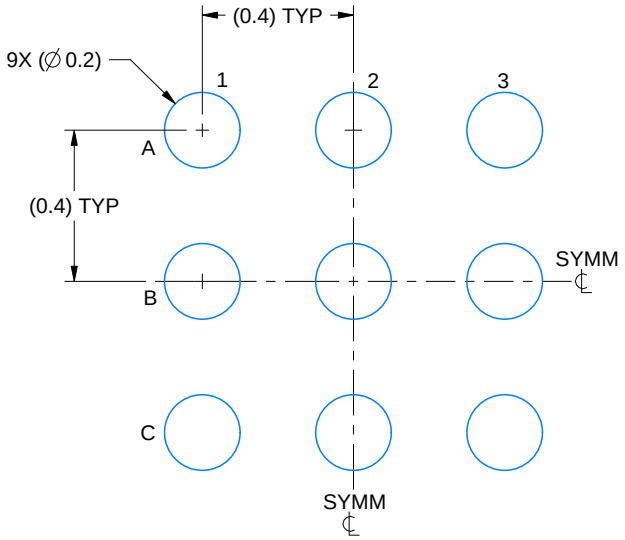

LAND PATTERN EXAMPLE
EXPOSED METAL SHOWN
SCALE: 50X

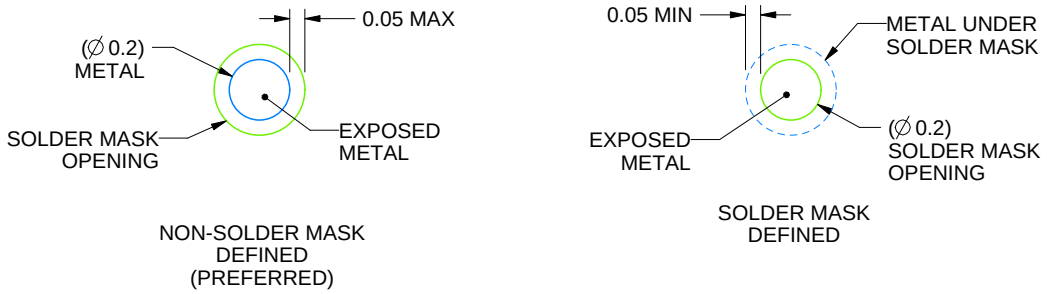

SOLDER MASK DETAILS
NOT TO SCALE

4225688/A 02/2020

NOTES: (continued)

3. Final dimensions may vary due to manufacturing tolerance considerations and also routing constraints.
   See Texas Instruments Literature No. SNVA009 (www.ti.com/lit/snva009).

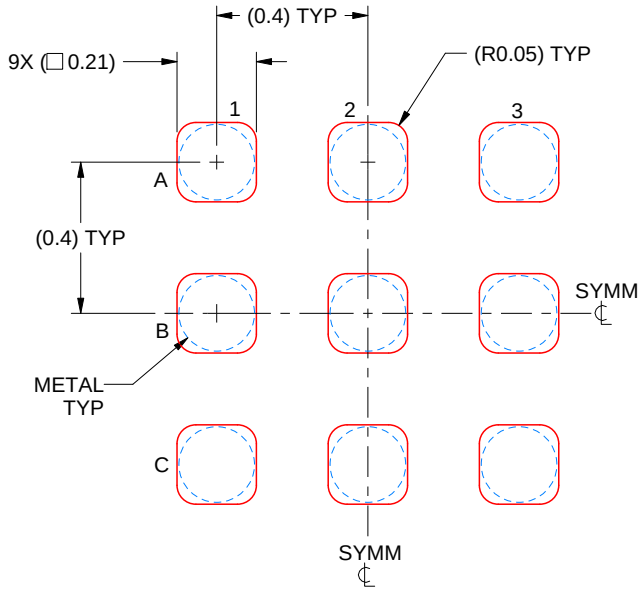

SOLDER PASTE EXAMPLE
BASED ON 0.1 mm THICK STENCIL
SCALE: 50X

4225688/A 02/2020

NOTES: (continued)

4. Laser cutting apertures with trapezoidal walls and rounded corners may offer better paste release.

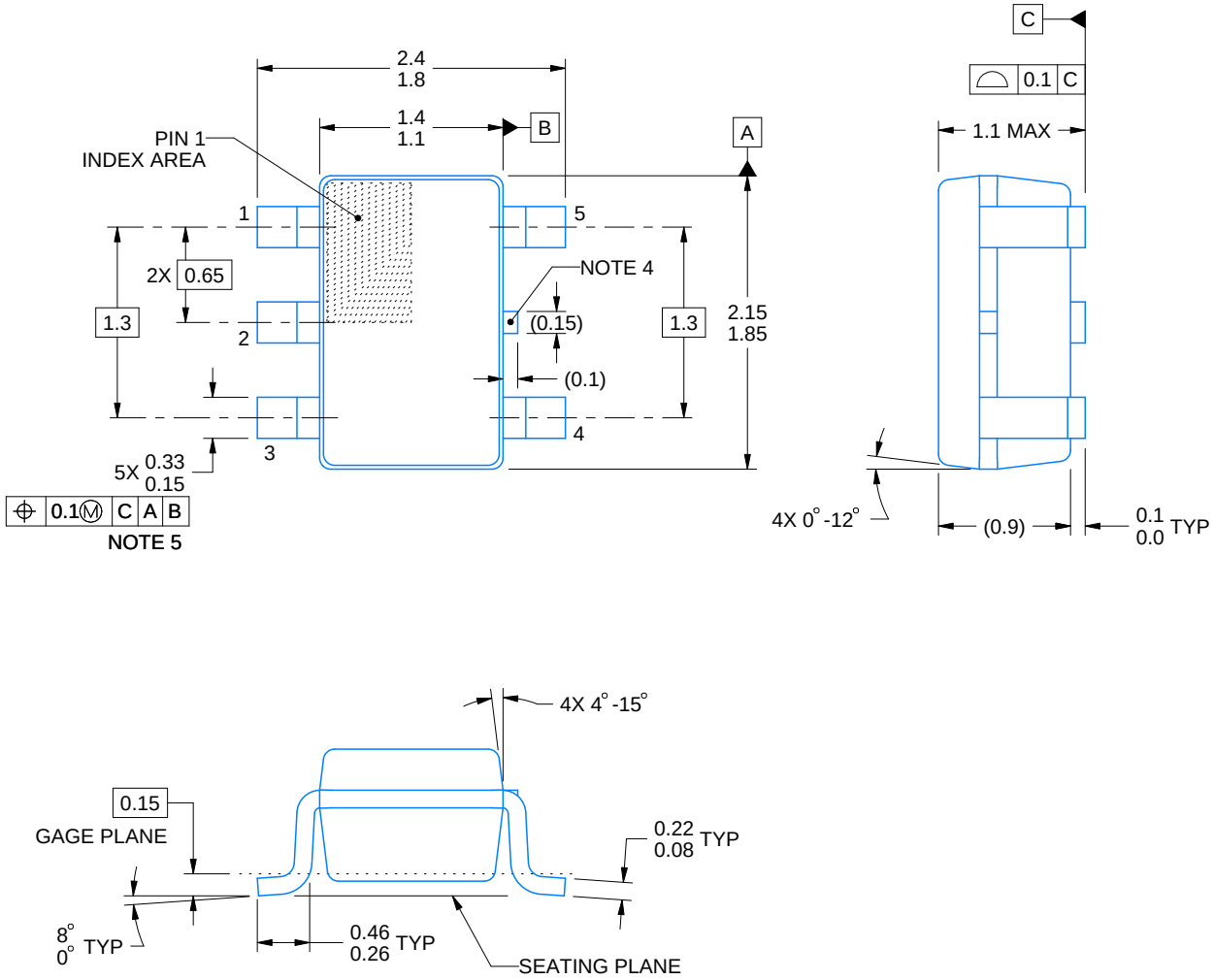

NOTES:

1. All linear dimensions are in millimeters. Any dimensions in parenthesis are for reference only. Dimensioning and tolerancing per ASME Y14.5M.
2. This drawing is subject to change without notice.
3. Refernce JEDEC MO-203.
4. Support pin may differ or may not be present.
5. Lead width does not comply with JEDEC.
6. Body dimensions do not include mold flash, protrusions, or gate burrs. Mold flash, protrusions, or gate burrs shall not exceed 0.25mm per side

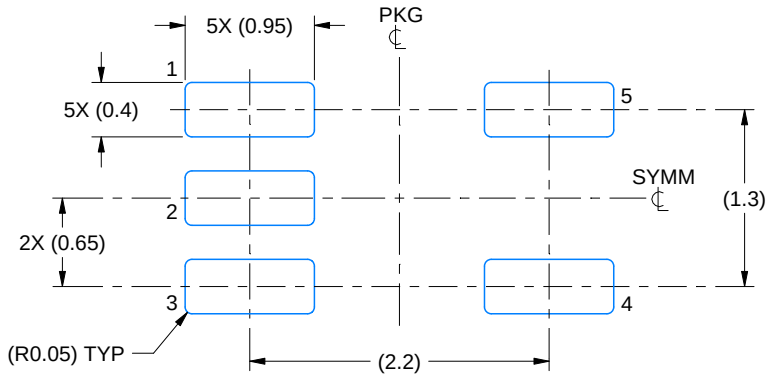

LAND PATTERN EXAMPLE
EXPOSED METAL SHOWN
SCALE:18X

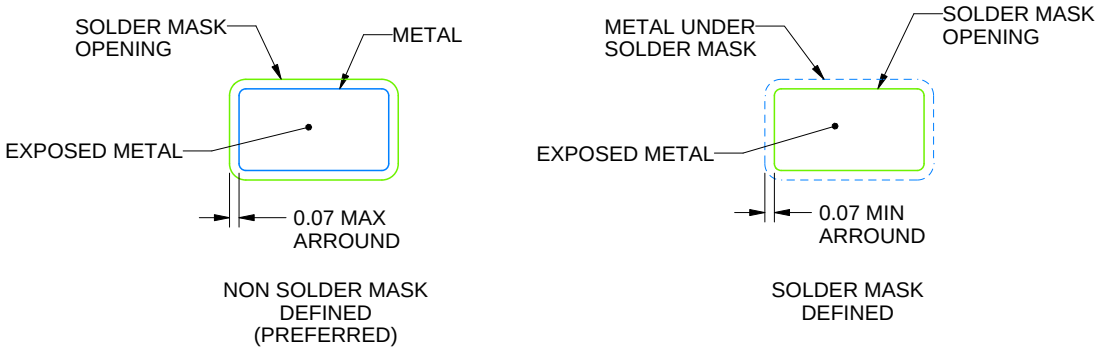

SOLDER MASK DETAILS

4214834/G 11/2024

NOTES: (continued)

7. Publication IPC-7351 may have alternate designs.
8. Solder mask tolerances between and around signal pads can vary based on board fabrication site.

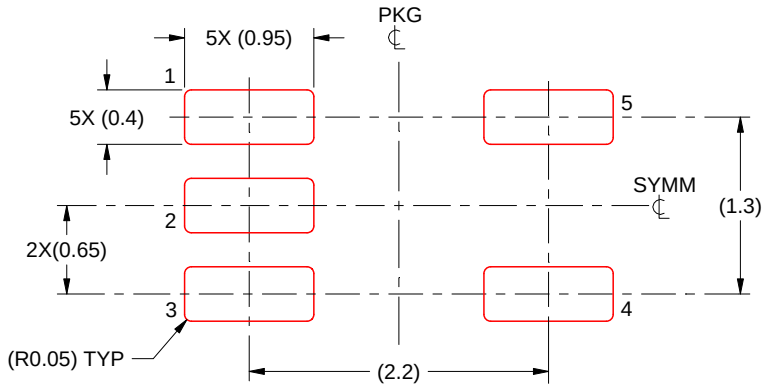

SOLDER PASTE EXAMPLE
BASED ON 0.125 THICK STENCIL
SCALE:18X

4214834/G 11/2024

NOTES: (continued)

9. Laser cutting apertures with trapezoidal walls and rounded corners may offer better paste release. IPC-7525 may have alternate design recommendations.
10. Board assembly site may have different recommendations for stencil design.

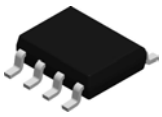

PACKAGE OUTLINE

D0008A

SOIC - 1.75 mm max height

SMALL OUTLINE INTEGRATED CIRCUIT

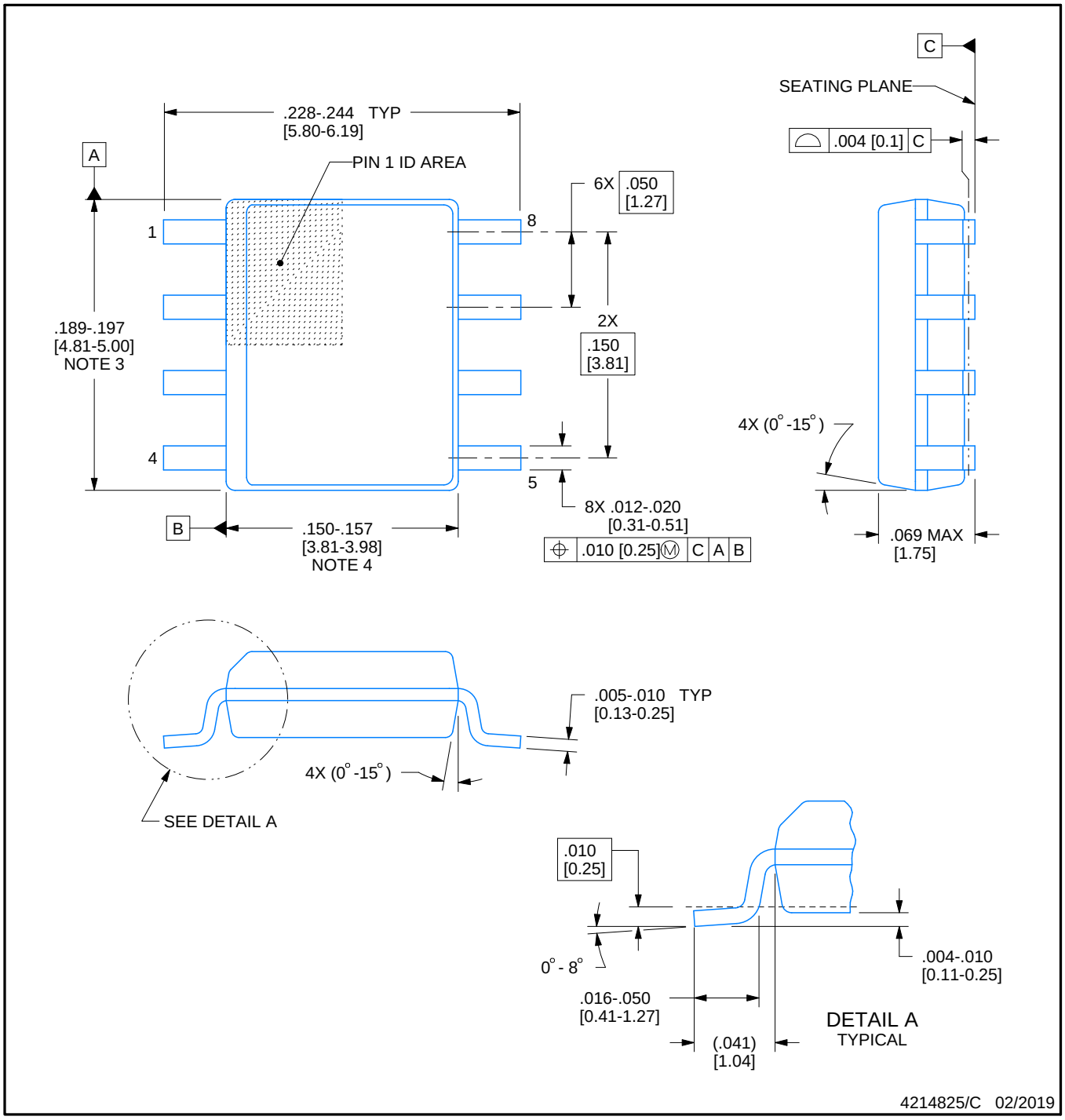

NOTES:

1. Linear dimensions are in inches [millimeters]. Dimensions in parenthesis are for reference only. Controlling dimensions are in inches. Dimensioning and tolerancing per ASME Y14.5M.
2. This drawing is subject to change without notice.
3. This dimension does not include mold flash, protrusions, or gate burrs. Mold flash, protrusions, or gate burrs shall not exceed .006 [0.15] per side.
4. This dimension does not include interlead flash.
5. Reference JEDEC registration MS-012, variation AA.

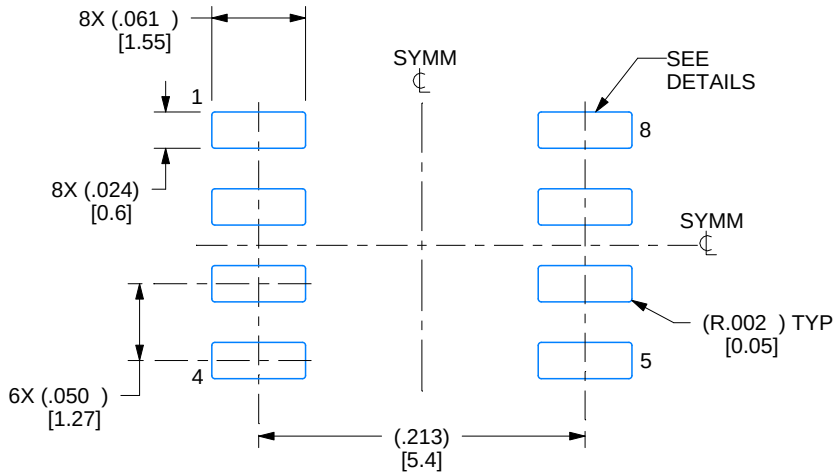

LAND PATTERN EXAMPLE
EXPOSED METAL SHOWN
SCALE:8X

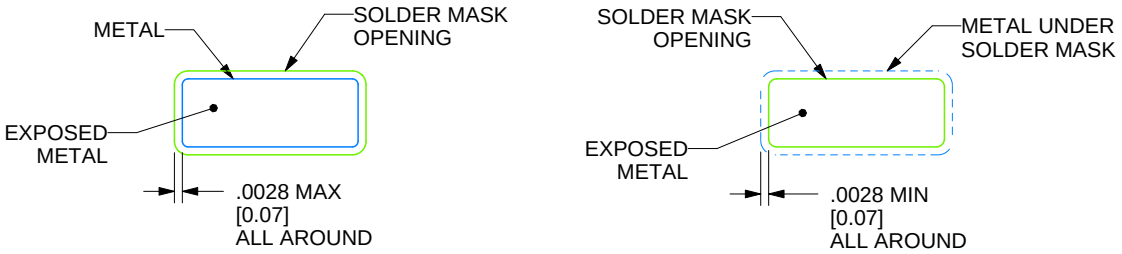

SOLDER MASK DETAILS

4214825/C 02/2019

NOTES: (continued)

6. Publication IPC-7351 may have alternate designs.
7. Solder mask tolerances between and around signal pads can vary based on board fabrication site.

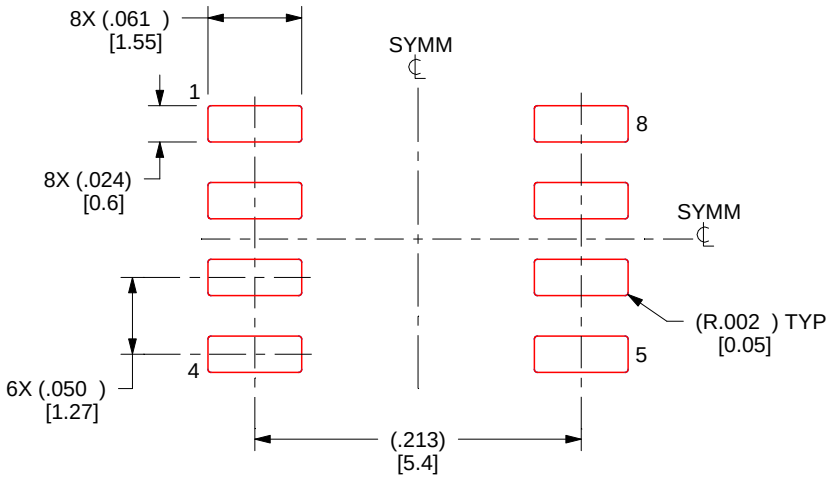

SOLDER PASTE EXAMPLE
BASED ON .005 INCH [0.125 MM] THICK STENCIL
SCALE:8X

4214825/C 02/2019

NOTES: (continued)

8. Laser cutting apertures with trapezoidal walls and rounded corners may offer better paste release. IPC-7525 may have alternate design recommendations.
9. Board assembly site may have different recommendations for stencil design.

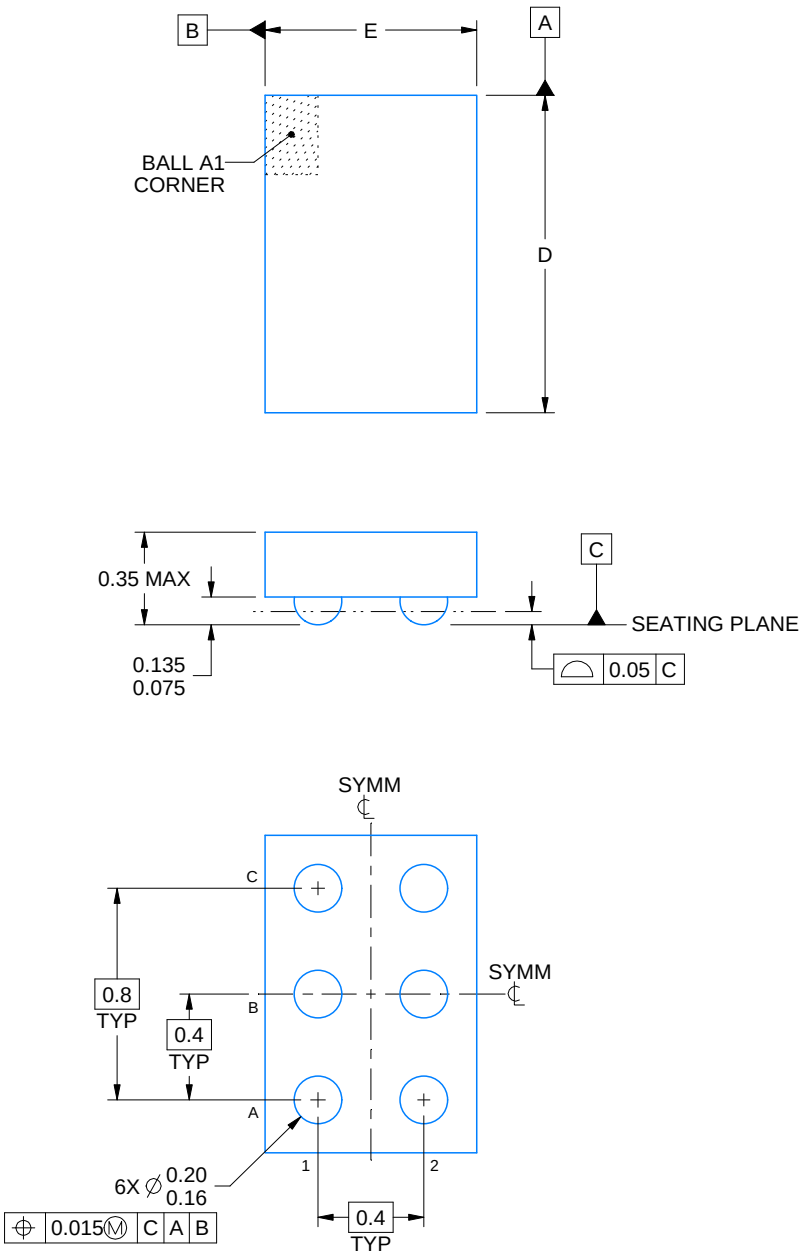

4226653/A 03/2021

NOTES:

1. All linear dimensions are in millimeters. Any dimensions in parenthesis are for reference only. Dimensioning and tolerancing per ASME Y14.5M.
2. This drawing is subject to change without notice.

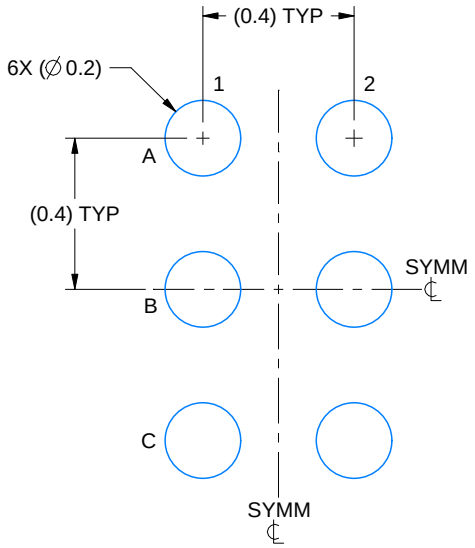

LAND PATTERN EXAMPLE
EXPOSED METAL SHOWN
SCALE: 50X

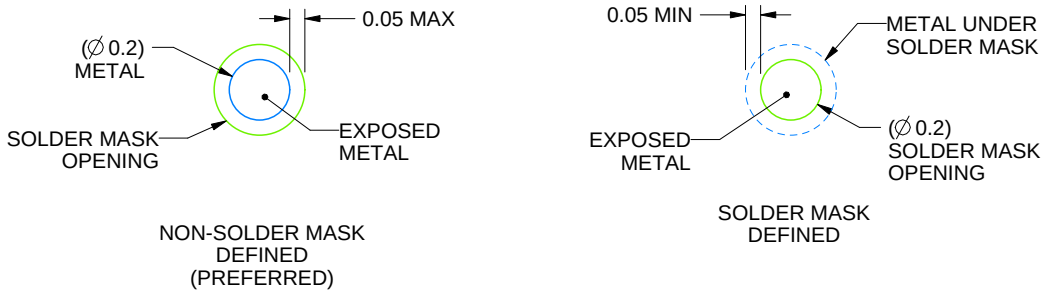

SOLDER MASK DETAILS
NOT TO SCALE

4226653/A 03/2021

NOTES: (continued)

3. Final dimensions may vary due to manufacturing tolerance considerations and also routing constraints.
   See Texas Instruments Literature No. SNVA009 (www.ti.com/lit/snva009).

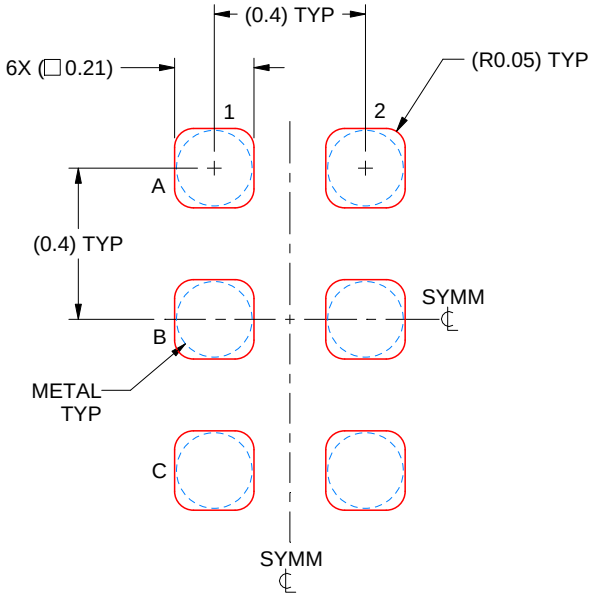

SOLDER PASTE EXAMPLE
BASED ON 0.1 mm THICK STENCIL
SCALE: 50X

4226653/A 03/2021

NOTES: (continued)

4. Laser cutting apertures with trapezoidal walls and rounded corners may offer better paste release.

GENERIC PACKAGE VIEW

DSG 8

WSON - 0.8 mm max height

2 x 2, 0.5 mm pitch

PLASTIC SMALL OUTLINE - NO LEAD

This image is a representation of the package family, actual package may vary.
Refer to the product data sheet for package details.

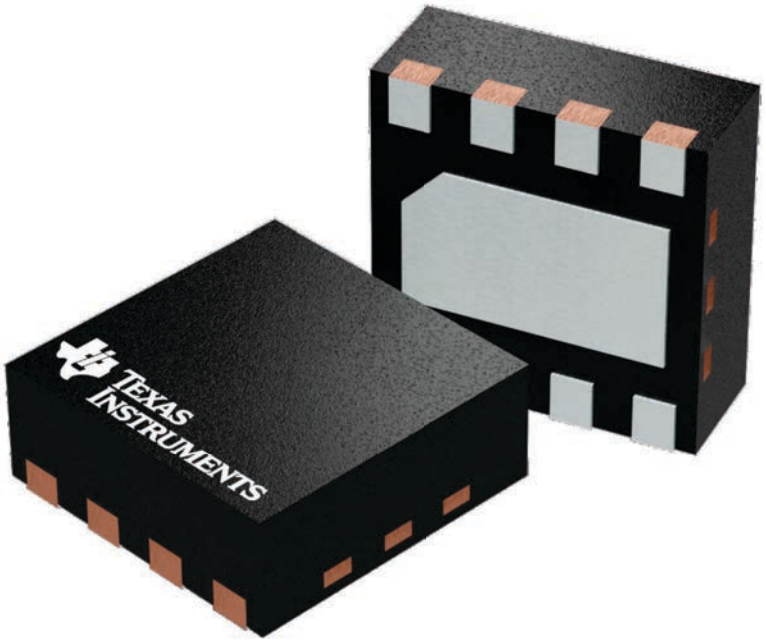

4224783/A

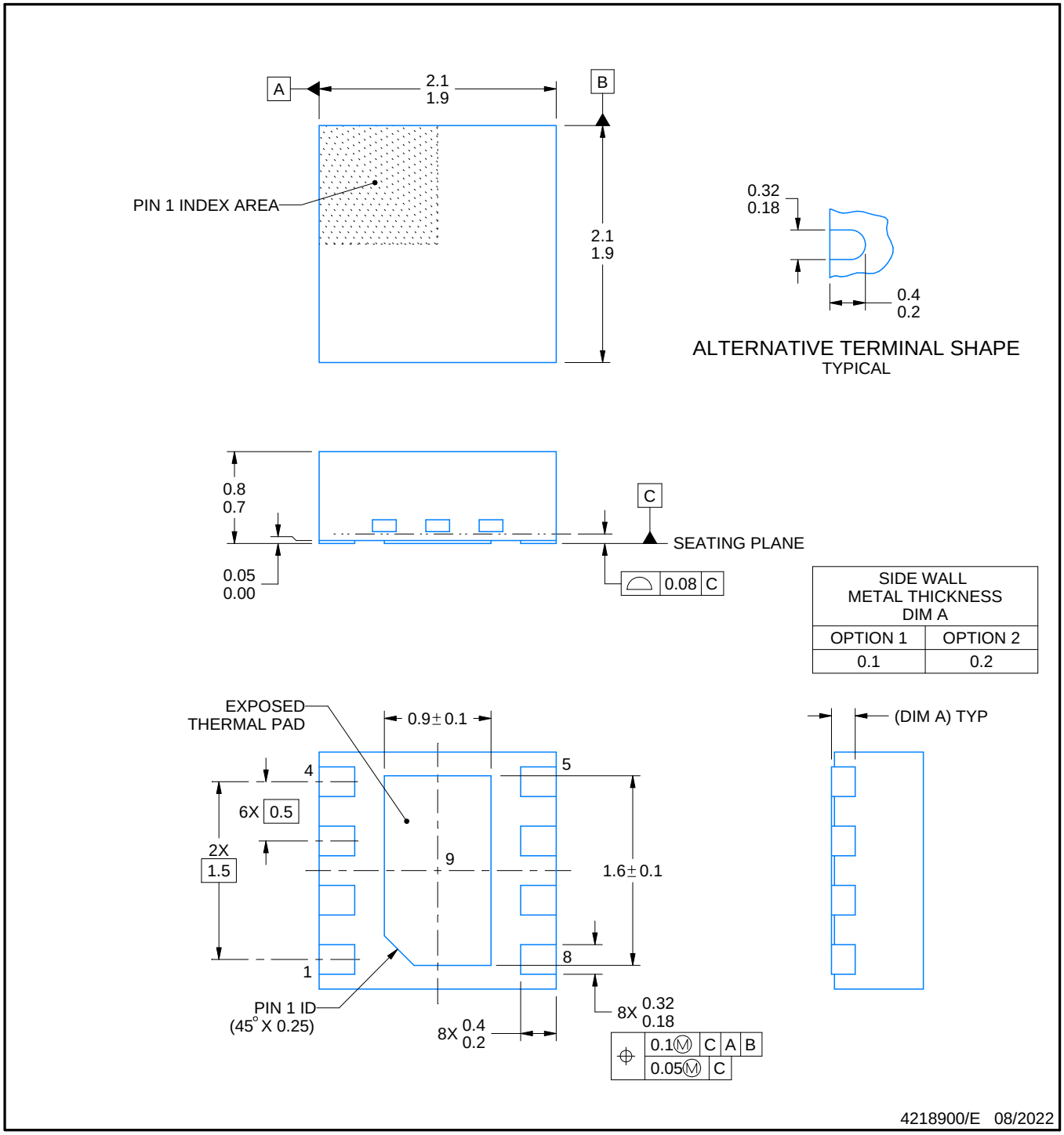

NOTES:

1. All linear dimensions are in millimeters. Any dimensions in parenthesis are for reference only. Dimensioning and tolerancing per ASME Y14.5M.
2. This drawing is subject to change without notice.
3. The package thermal pad must be soldered to the printed circuit board for thermal and mechanical performance.

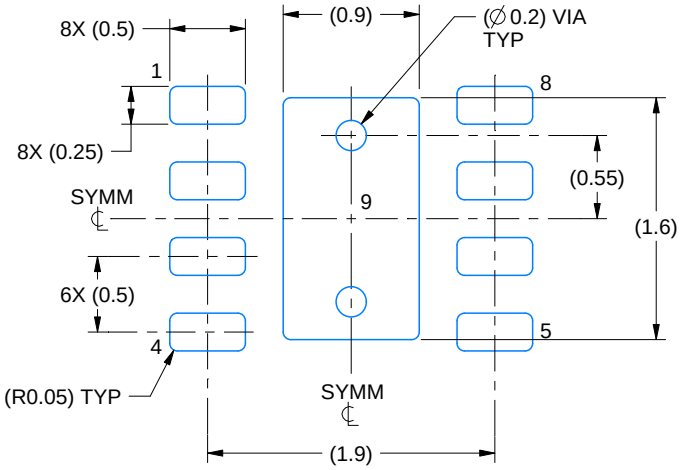

LAND PATTERN EXAMPLE
SCALE:20X

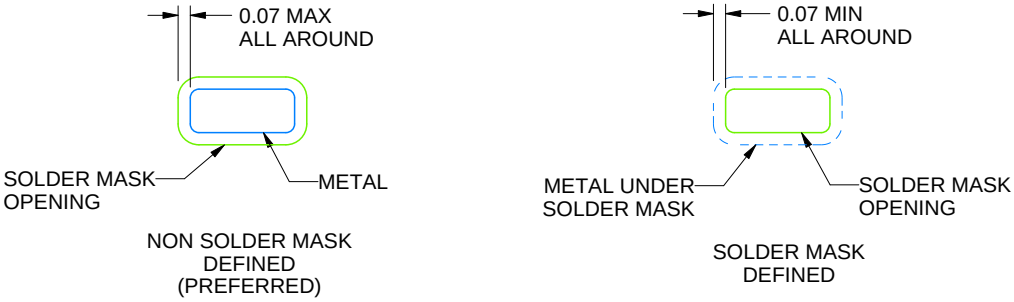

SOLDER MASK DETAILS

4218900/E 08/2022

NOTES: (continued)

4. This package is designed to be soldered to a thermal pad on the board. For more information, see Texas Instruments literature number SLUA271 (www.ti.com/lit/slua271).
5. Vias are optional depending on application, refer to device data sheet. If any vias are implemented, refer to their locations shown on this view. It is recommended that vias under paste be filled, plugged or tented.

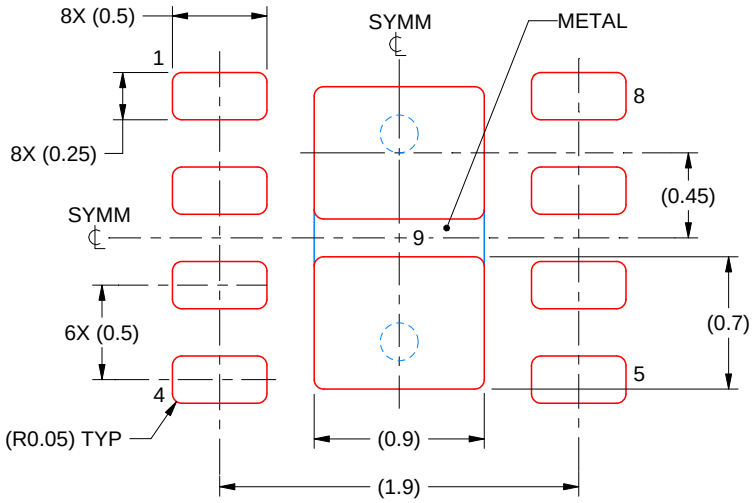

SOLDER PASTE EXAMPLE
BASED ON 0.125 mm THICK STENCIL

EXPOSED PAD 9:
87% PRINTED SOLDER COVERAGE BY AREA UNDER PACKAGE
SCALE:25X

4218900/E 08/2022

NOTES: (continued)

6. Laser cutting apertures with trapezoidal walls and rounded corners may offer better paste release. IPC-7525 may have alternate design recommendations.

PW0014A

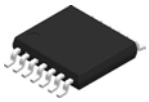

PACKAGE OUTLINE

TSSOP - 1.2 mm max height

SMALL OUTLINE PACKAGE

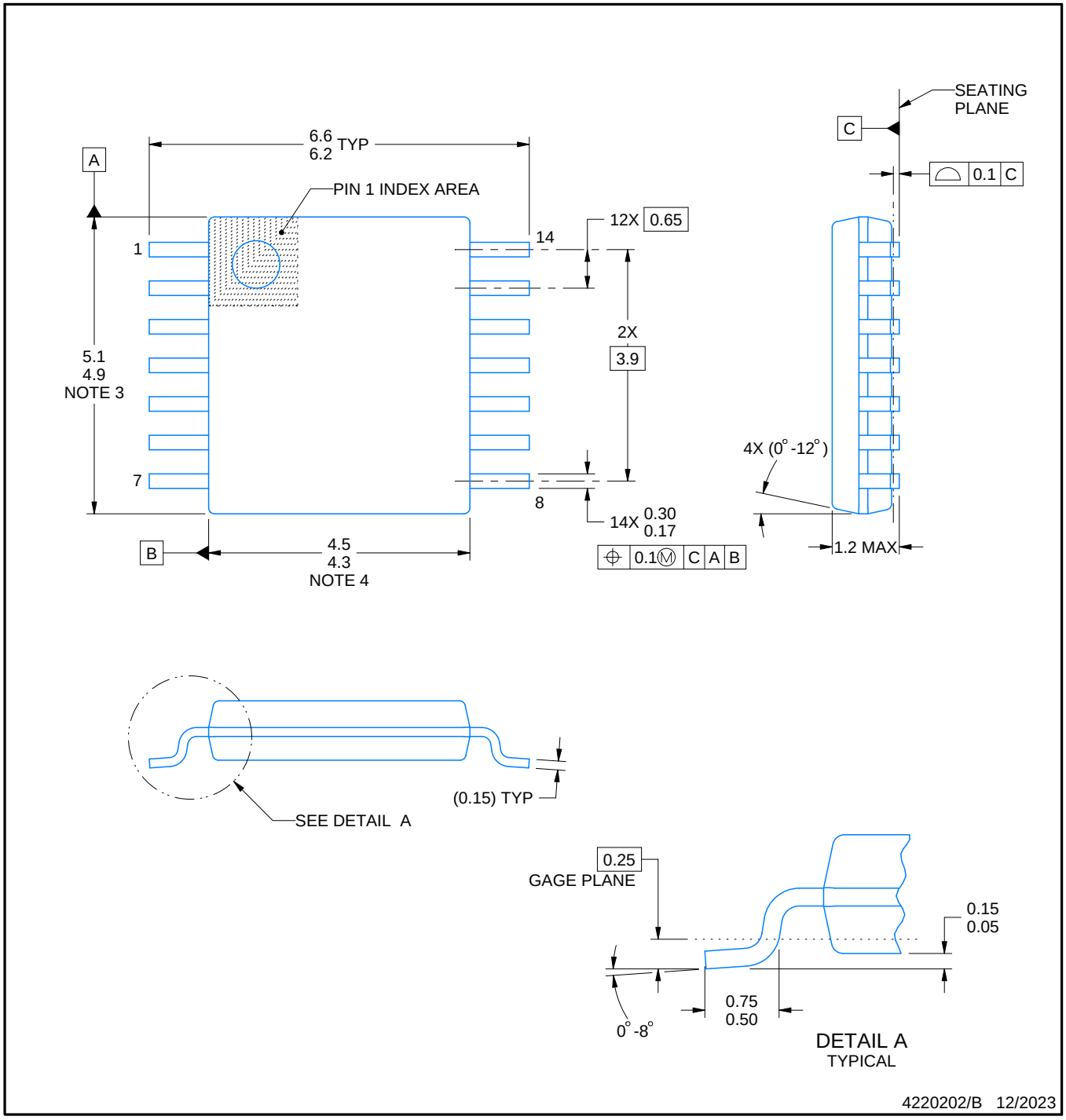

NOTES:

1. All linear dimensions are in millimeters. Any dimensions in parenthesis are for reference only. Dimensioning and tolerancing per ASME Y14.5M.
2. This drawing is subject to change without notice.
3. This dimension does not include mold flash, protrusions, or gate burrs. Mold flash, protrusions, or gate burrs shall not exceed 0.15 mm per side.
4. This dimension does not include interlead flash. Interlead flash shall not exceed 0.25 mm per side.
5. Reference JEDEC registration MO-153.

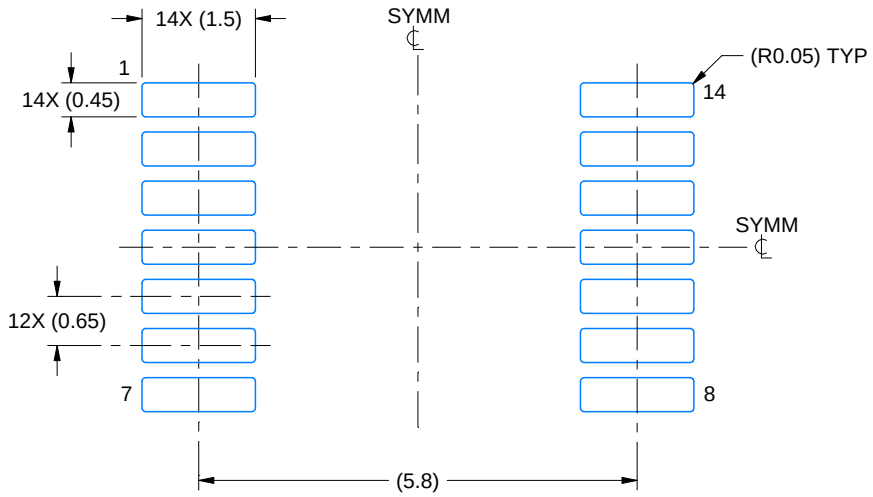

LAND PATTERN EXAMPLE
EXPOSED METAL SHOWN
SCALE: 10X

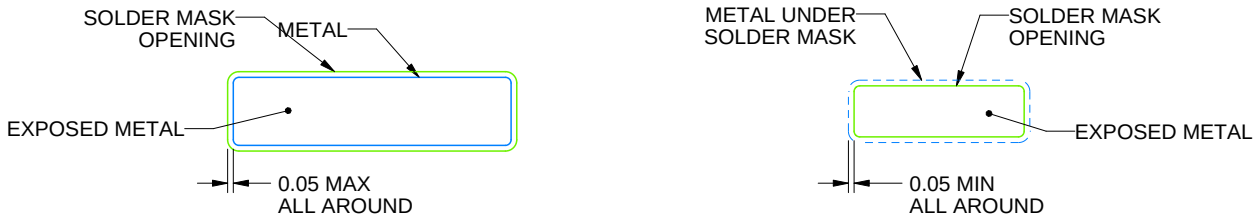

NON-SOLDER MASK DEFINED (PREFERRED)

SOLDER MASK DEFINED

SOLDER MASK DETAILS

4220202/B 12/2023

NOTES: (continued)

6. Publication IPC-7351 may have alternate designs.
7. Solder mask tolerances between and around signal pads can vary based on board fabrication site.

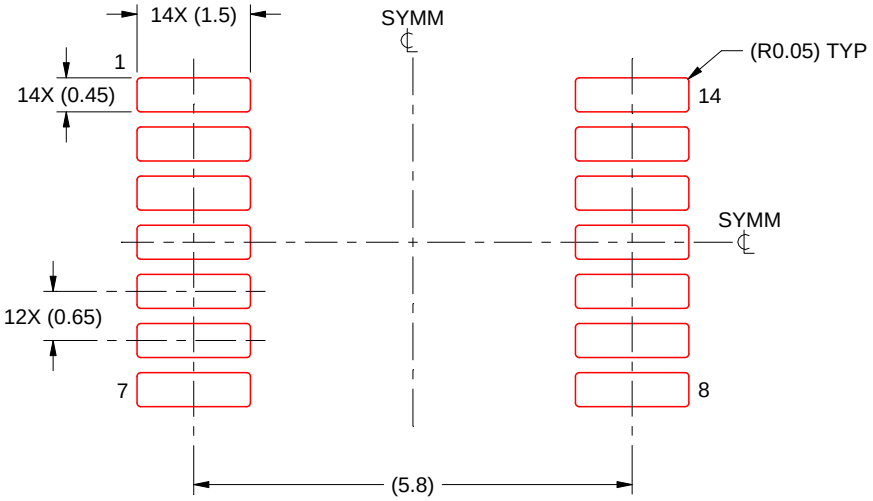

SOLDER PASTE EXAMPLE
BASED ON 0.125 mm THICK STENCIL
SCALE: 10X

4220202/B 12/2023

NOTES: (continued)

8. Laser cutting apertures with trapezoidal walls and rounded corners may offer better paste release. IPC-7525 may have alternate design recommendations.
9. Board assembly site may have different recommendations for stencil design.

IMPORTANT NOTICE AND DISCLAIMER

TI PROVIDES TECHNICAL AND RELIABILITY DATA (INCLUDING DATA SHEETS), DESIGN RESOURCES (INCLUDING REFERENCE DESIGNS), APPLICATION OR OTHER DESIGN ADVICE, WEB TOOLS, SAFETY INFORMATION, AND OTHER RESOURCES “AS IS” AND WITH ALL FAULTS, AND DISCLAIMS ALL WARRANTIES, EXPRESS AND IMPLIED, INCLUDING WITHOUT LIMITATION ANY IMPLIED WARRANTIES OF MERCHANTABILITY, FITNESS FOR A PARTICULAR PURPOSE OR NON-INFRINGEMENT OF THIRD PARTY INTELLECTUAL PROPERTY RIGHTS.

These resources are intended for skilled developers designing with TI products. You are solely responsible for (1) selecting the appropriate TI products for your application, (2) designing, validating and testing your application, and (3) ensuring your application meets applicable standards, and any other safety, security, regulatory or other requirements.

These resources are subject to change without notice. TI grants you permission to use these resources only for development of an application that uses the TI products described in the resource. Other reproduction and display of these resources is prohibited. No license is granted to any other TI intellectual property right or to any third party intellectual property right. TI disclaims responsibility for, and you will fully indemnify TI and its representatives against, any claims, damages, costs, losses, and liabilities arising out of your use of these resources.

TI’s products are provided subject to TI’s Terms of Sale or other applicable terms available either on ti.com or provided in conjunction with such TI products. TI’s provision of these resources does not expand or otherwise alter TI’s applicable warranties or warranty disclaimers for TI products.

TI objects to and rejects any additional or different terms you may have proposed.

Mailing Address: Texas Instruments, Post Office Box 655303, Dallas, Texas 75265
Copyright © 2025, Texas Instruments Incorporated